TR 66-139

AEDC-TR-66-139

ARCHIVE COPY
DO NOT LOAN

PROPERTY OF U. S. AIR FORCE
AEDC LIBRARY
AF 40(600)1200

SPECTRAL CHARACTERISTICS OF A LOW DENSITY ARC-HEATED NITROGEN PLASMA

L. L. Price and W. K. McGregor

ARO, Inc.

October 1966

Distribution of this document is unlimited.

AEDC TECHNICAL LIBRARY
5 0720 00031 3264

ROCKET TEST FACILITY
ARNOLD ENGINEERING DEVELOPMENT CENTER
AIR FORCE SYSTEMS COMMAND
ARNOLD AIR FORCE STATION, TENNESSEE

PROPERTY OF U. S. AIR FORCE
AEDC LIBRARY
AF 40(600)1200

NOTICES

When U. S. Government drawings specifications, or other data are used for any purpose other than a definitely related Government procurement operation, the Government thereby incurs no responsibility nor any obligation whatsoever, and the fact that the Government may have formulated, furnished, or in any way supplied the said drawings, specifications, or other data, is not to be regarded by implication or otherwise, or in any manner licensing the holder or any other person or corporation, or conveying any rights or permission to manufacture, use, or sell any patented invention that may in any way be related thereto.

Qualified users may obtain copies of this report from the Defense Documentation Center.

References to named commercial products in this report are not to be considered in any sense as an endorsement of the product by the United States Air Force or the Government.

SPECTRAL CHARACTERISTICS OF A LOW DENSITY ARC-HEATED NITROGEN PLASMA

L. L. Price* and W. K. McGregor
ARO, Inc.

Distribution of this document is unlimited.

*Propulsion Wind Tunnel Facility

AF - AEDC
Arnold AFS Tenn

FOREWORD

The work reported herein was sponsored by the Arnold Engineering Development Center (AEDC), Air Force Systems Command (AFSC), Arnold Air Force Station, Tennessee, under Program Element 61445014, Project 8951, Task 895105.

The research was conducted by ARO, Inc. (a subsidiary of Sverdrup & Parcel and Associates, Inc.), contract operator of AEDC under Contract AF40(600)-1200. The work was conducted under ARO Project No. RW2520 in the Propulsion Research Area (R-2E-3) of the Rocket Test Facility (RTF), and the manuscript was submitted for publication as partial results of these research efforts on June 28, 1966.

This technical report has been reviewed and is approved.

Terry L. Hershey Captain, USAF Research Division Directorate of Plans and Technology	Donald D. Carlson Colonel, USAF Director of Plans and Technology

ABSTRACT

The visible and near ultraviolet spectrum from free jets of nitrogen plasmas produced by an arc-jet and exhausted into a low pressure (~1 torr) test cell was photographed under varying conditions. The spectral characteristics were compared to the spectra obtained from argon plasmas produced in the same apparatus. The characteristics of the argon spectra have been attributed to the existence of long-lived, metastable argon atoms; the nitrogen spectral characteristics were found to be interpretable in a similar way. The spectrum consisted of N_2^+ (first negative) and N_2 (second positive) band systems, N atomic lines, and strong impurity radiation from OH, NH, and NO. The impurity bands can be explained on the basis of the ambient test cell gases which mix in the jet boundary and become excited by collision of the second kind with nitrogen atomic and molecular metastables. Several gases, chiefly argon, were mixed with the nitrogen in order to investigate the possible collisions of the second kind and thus determine the mechanisms responsible for the radiation. Several possible mechanisms are proposed in the report, but complete explanation must await further study. The utility of the spectrum for diagnostic purposes was also investigated, and it was found that portions of the principal molecular bands are masked by the impurity radiation and that high resolution is required for their use in order to measure rotational temperature.

CONTENTS

		Page
	ABSTRACT	iii
I.	INTRODUCTION	1
II.	APPARATUS	2
III.	PRELIMINARY DISCUSSION	3
IV.	EXPERIMENTAL RESULTS	5
V.	DISCUSSION OF EXPERIMENTAL RESULTS - EXCITATION MECHANISMS	9
VI.	USABLE LINES AND BANDS FOR TEMPERATURE MEASUREMENT	15
VII.	CONCLUDING REMARKS	16
	REFERENCES	18

ILLUSTRATIONS

Figure		
1.	Physical Arrangement of Arc-Jet and Low Pressure Test Cell	21
2.	Photograph of Nitrogen Plasma Stream	22
3.	Energy Level Diagram of the Nitrogen Atom	23
4.	Partial Energy Level Diagram of the N_2 and N_2^+ Molecules	24
5.	Composite Diagram of Spectral Lines and Bands in Nitrogen Plasma	25
6.	Comparative Energy Level Diagram for All Species Observed in Nitrogen-Argon Plasmas	26

SECTION I
INTRODUCTION

Analysis of the spectral radiation emitted from high temperature gases has come to be regarded, potentially, as a most useful diagnostic method for measurement of the properties of supersonic plasmas used for aerodynamic testing purposes. The method avoids disturbances of the stream which are characteristic of immersed probe methods; this is a great advantage for high temperature reactive flows because of the chemical and electrical behavior induced when the gases are disturbed as well as the thermal cooling problem of the probe. Some success in using spectroscopic methods for diagnostics of electric arc-heated gas flows has been achieved in the past for the monatomic gas, argon, (Refs. 1, 2, and 3) but only after a very clear understanding of the excitation and radiative mechanisms was obtained. The research reported herein contains work of an introductory nature on the characteristics of a particular diatomic plasma, nitrogen.

The results of previous studies of a supersonic free jet of arc-heated argon plasma by spectroscopy may be summarized as follows:

1. The arc region contains neutral lines, a few ionic lines, and a strong continuum of magnitude equal to about 30 percent of that of the strongest neutral lines. The excitation temperature measured in this region ranged from 20,000 to 12,000°K (Ref. 1).

2. The low density free jet contains highly excited atoms and radiates over a length of 3 to 4 ft downstream from the source, even though the gas temperature is very low (100 to 1000°K) over most of this low density region.

3. The source of the radiation from the expanded plume is believed to be metastable atoms, which are created in the arc, are swept downstream, and then are excited through collisions with electrons and radiate (Ref. 2). The metastable energy is given up through collisions of the second kind to excitation of other species, such as nitrogen in the mixing boundary, which in turn may radiate (Ref. 3).

4. The intensities of the atomic lines indicate a Maxwell-Boltzmann distribution of the population of energy levels; therefore, an excitation temperature may be determined (Ref. 4).

5. A theoretical method of writing the distribution function for the population of energy levels was found (Ref. 4) which preserved

the Maxwellian character of the distribution while increasing the total population of each level by several orders of magnitude. This ensured that the experimentally determined excitation temperature was a valid one. Also, the new distribution function allowed a determination of the density of metastable atoms to be made from the absolute intensity of a spectral line (Ref. 4).

6. The excitation temperature was shown to be, in fact, the same as the free-electron temperature by a simultaneous measurement of excitation temperature by spectroscopy and the free-electron temperature by Langmuir probes (Ref. 5).

The question consequently arises as to whether the radiation from the plasma produced from a diatomic gas such as nitrogen will exhibit a character similar to that of the plasma produced from a monatomic gas such as argon. Previous work with arc-heated nitrogen exhausting into the ambient atmosphere showed that the temperature measured spectroscopically from atomic line intensities was of about the same magnitude as for the argon plasma (Ref. 6). Although no temperature measurements were made in the present study, it is shown that the behavior for low density free jets is indeed similar to, but more complicated than, the argon case.

A second objective of this spectral study of the radiation from a low density, arc-heated nitrogen plasma is to locate the lines and bands in the visible spectrum which show the least interference from neighboring lines and bands and thus can be used for quantitative measurement purposes. In particular, the bands of the molecular N_2 or N_2^+ systems which appear clearest for the measurement of the rotational temperature are sought. The choice of bands to use was found to depend strongly on the impurity radiations in the plasma.

SECTION II
APPARATUS

The spectral measurements were performed in an aluminum test cell evacuated by mechanical vacuum pumps. The complete physical arrangement is shown schematically in Fig. 1. The cell is 5 ft long with a square cross section 15 in. on a side. Measurements were taken through a 4- by 20-in. quartz window, 3/4 in. thick. A cell pressure of 0.1 torr can be maintained with no gas flow; with the maximum gas flow used (0.7 g/sec), the cell pressure was 2 torr.

The Gerdien-type dc arc-jet was mounted outside the cell and positioned such that the blown arc just protrudes into the cell. It

consists of a tungsten rod cathode and an annularly shaped copper anode. The gas enters the rear of the arc chamber, passes through the arc, and is then expanded into the test cell. A typical arc current used was 170 amp at a potential of 60 v, giving an applied power of 10.2 kw. Power efficiencies on the order of 60 to 70 percent were obtained. A radio frequency voltage applied between electrodes was used to initiate the arc process. The plume extends about 30 in. and has a diameter of about 3 in. A normal shock wave exists about 4 in. downstream of the arc. The stream is shown photographically in Fig. 2.

A CENCO grating spectrograph with no collecting optics and Kodak®-type 1-N spectroscopic film was used for recording spectra. The spectrograph has a focal length of 50 cm and used a 2- by 2-in., 15,000-lines/in., replica grating, blazed for 4000 Å. A reciprocal dispersion of 16.7 Å/mm and a resolution of about 0.5 Å in the first order resulted. Slit widths of 20 to 50 microns were used.

A nitrogen (or argon) gas flow of about 0.5 g/sec was necessary to produce a steady plasma of sufficient dimensions. Exposure times of 10 min or more were necessary to photograph the spectrum. The spectral range photographed was from 3000 to 7000 Å.

SECTION III
PRELIMINARY DISCUSSION

The composition of the nitrogen plasma emanating from the arc region of the arc-jet was expected to include neutral molecules and atoms, the molecular ion, the atomic ion to a lesser extent, and free electrons. From past experience with argon plasma, the state of the gas was not expected to be an equilibrium one because of the arc heating process. The electron temperature was expected to be considerably greater than the gas temperature at the orifice exit, the degree of ionization was expected to be greater than predicted by the Saha equation at the gas temperature but less than if the electron temperature were used, and likewise the dissociation was not expected to exhibit equilibrium character. Again, by judging from results of studies of an argon plasma and the fact that the static temperature in the low pressure plume is less than 1000°K, the metastable states of nitrogen were expected to play a dominant role in the radiative mechanism. Thus, a study of the energy level diagrams of the nitrogen atom and the molecular species would appear to be profitable.

The energy level diagram of the nitrogen atom appears in Fig. 3, where the transitions giving rise to the principal spectral lines are designated. The most important points of note are:

1. The metastable levels $2p^3\ ^2P$ and $2p^3\ ^2D$ of the nitrogen atom lie at 3.58 and 2.38 ev; the metastable levels of argon were 11.55 and 11.72 ev. Neglecting lifetimes would mean that the density ratios of metastables to ground state atoms for nitrogen, N^m/N,* are larger than for argon, A^m/A, at the same temperature condition. If the density of N^m is sufficient, then the forbidden transitions at 3467 and 5198 Å may be detected.

2. The energy increment from the metastable levels to the next excited states is large, about 7 ev. Thus, the mechanism of electron collisional excitation of metastables to higher radiating states, as found in argon, appears to be less likely in the nitrogen plasma. Therefore, the appearance of atomic line radiation from upper states would require some other excitation process.

3. A $3s'''\ ^6S^0$ metastable state which has an energy of 17.2 ev is thought to exist in afterglow plasmas (Ref. 7). This energy level is greater than any of the excited levels from which atomic line radiation of interest occurs and may be instrumental in producing such radiation downstream of the arc.

A partial energy level diagram of N_2 appears in Fig. 4. The following comments can be made about it and the general nature of expected nitrogen molecular spectra:

1. The second positive system should be the strongest band system of N_2 in the spectral range viewed, according to observations in other gas discharges (Ref. 8).

2. Metastable electronic states of the molecule are:

   a. $A\ ^3\Sigma_u^+$ - 6.17 ev - 1 sec half-life (Ref. 9)

   b. $^3\Delta_u$ - ~7.5 ev - >1/2 sec half-life (Ref. 10)

   c. $a'\ ^1\Sigma_u^-$ - 8.40 ev - 0.04 sec half-life (Ref. 9)

---

*Superscript "m" is used to denote atoms or molecules in electronically excited metastable states.

d. $a' \, {}^1\Pi_g$ - 8.55 ev (Ref. 9)

e. $w \, {}^1\Delta_u$ - 8.89 ev - >1/2 sec half-life (Ref. 10)

Radiation arising from these states appears in afterglows as:

a. Vegard-Kaplan bands

b. Wilkinson-Mulliken ultraviolet bands

c. Lyman-Birge-Hopfield bands

3. Excited vibrational levels of the electronic ground state of N_2 exist at these temperatures. These have been used in the literature (Ref. 10) to explain the excitation of Na atomic radiation and to justify the direct exchange of electronic and vibrational energy.

A partial energy level diagram of N_2^+ is also shown in Fig. 4. If N_2^+ is present, its first negative band system should be observed since the excited electronic level is at only 3.15 ev.

Since there are so many possibilities for energy carriers downstream from the arc region, it is expected that the excitational energy transfer mechanisms may be quite complicated. A general rule that governs direct quantum state transfer of energy is that the probability for transfer reaches a sharp maximum near the energy where the energy difference between the quantum state of the carrier and that of the receiving energy is zero (Ref. 11).

SECTION IV
EXPERIMENTAL RESULTS

During the course of these studies, the spectra of the clearly outlined free jet of plasma were photographed many times, at different positions along the axis, at different operating conditions, and with various gases mixed into the nitrogen stream. The study began with a supposedly pure free jet of nitrogen plasma. Very strong impurity spectra of OH and NH bands were first interpreted as an indication of water vapor either in the nitrogen gas supply or leaking into the plasma generator from the cooling water and thus passing through the arc. Analysis of the gas, use of bone-dry nitrogen, and use of cold traps showed that the water vapor must enter the free-jet plume downstream of the arc discharge and from inside the test cell. Consequently, the free jet was surrounded by a glass tube, and later a stainless steel tube with quartz windows, in an attempt to eliminate the water vapor. Some improvement was noted in the weaker-appearing OH and NH spectra, but

the impurities were not completely eliminated. Instead of making further attempts to eliminate the impurities, it was decided that a more important function would be served by providing an explanation for the spectra, since it was certain that only a very small amount of water vapor could be present. It appeared that some sort of selective excitation phenomena must be present. For the remainder of the study, an investigation of the possible means by which the observed spectra could be excited was made. To aid this study, other gases were added, and the results were compared to those obtained from a pure argon jet.

The following sections describe in detail the observed spectra under the various conditions. Variations in the intensities of lines and bands observed are given in relative terms only, since no film calibrations were made. However, the published spectral response of type 1N film is relatively constant in the range from 3000 to 4300 Å, where most of the comparisons of intensities are made.

4.1 NITROGEN PLASMA

The dominant nonimpurity molecular band radiation was from the N_2^+ first negative system. At least 16 bands of this system were identified. The only other nitrogen band system observed was the N_2 second positive system, of which at least 13 bands were identified. The total intensity of the N_2^+ first negative system was much greater than that of the N_2 second positive system. The strongest N_2 second positive bands were partly masked by the impurity molecular radiations, in particular from OH and NH. Many atomic lines, of which 28 were identified as nitrogen lines, appeared in the spectrum. The nitrogen band and line intensities were roughly constant from the arc to the shock region and then decreased downstream at about the same rate.

The relative intensities between the impurity radiations and the nitrogen spectral lines and bands changed along the axial length of the plasma. The impurity radiations were weak in the arc region and were normally the strongest downstream from the normal shock. Usually OH, NH, and NO were observed. Three atomic lines each of H and O were present - but only downstream of the arc.

In summary, the spectra in the normal shock region from the pure nitrogen plasma in approximate order of intensity consisted of

N_2^+ - 16 bands of first negative system lying between 3500 and 4700 Å

OH - 2811 Å band appearing in second order and 3064 Å band

NH - 3360 and 3370 Å, Q branches

N_2 - 13 bands of second positive system lying between 2950 and 4050 Å

N - 28 lines, from 3800 to 6800 Å

NO - 4 bands appearing in second order, 2800 to 3300 Å

H - 3 lines, Balmer series, H_α, H_β, and H_γ

O - 3 lines, 3947, 4368, and 5331 Å

The complete observed spectra are illustrated in Fig. 5.

Special effort was given to attempts to determine whether the forbidden atomic lines $^2P \rightarrow {}^4S$ (3467 Å) and $^2D \rightarrow {}^4S$ (5198 Å) appear in the spectra, since their appearance would show definitely whether the atomic metastables exist in appreciable quantities. Both of these lines lie very close to other atomic lines or within molecular bands which appear and, therefore, are difficult to identify positively. In both cases, weak lines do appear at the appropriate positions on the spectral plates.

4.2 ARGON PLASMA

The spectrum of the argon plasma contained not only argon atomic lines but also radiation from N_2, N_2^+, OH, NH, O, and H. Again, the impurity radiation enters the stream through mixing of the ambient cell gases with the argon plasma. In fact, the N_2 and N_2^+ spectra were more intense than in the pure nitrogen plasma. The N_2 second positive system dominated the spectrum in the arc region but became weaker downstream. The N_2^+ first negative system was weak in the arc region but was intensified downstream until it was nearly as strong as the N_2 band system in the normal shock.

Impurity radiation from NO was not observed, and radiation from NH was weak. The OH radiation was of approximately the same intensity as in the nitrogen plasma. Continuum radiation was observed in the arc region only.

A summary of the spectra in the normal shock region from the argon plasma is as follows:

N_2 - Second positive system

N_2^+ - First negative system

A - Many atomic lines

OH - Two bands as in the N_2 spectra

NH, H, and O - Weak

4.3 NITROGEN-ARGON MIXTURE

Numerous different nitrogen-argon mass flow ratios were used for further spectral studies. Increasing the percentage of argon resulted in the enhancement of the N_2 second positive system. The relative intensities of N_2 and N_2^+ for any one stream position changed smoothly from the pure nitrogen case to the pure argon case. The argon atomic line radiation did not appear until about 50-percent argon was used, at which time the nitrogen atomic lines were getting weak. Continuum radiation was not seen in the arc region until a greater percentage of argon than nitrogen was used.

In summary, for two cases of nitrogen-argon mixtures, the spectra in the normal shock region appeared as:

Greater N_2 Flow:	N_2^+	N_2	N	NH	OH	NO
Greater A Flow:	N_2	N_2^+	A	NH	OH	N

4.4 NITROGEN PLASMA IN A HYDROGEN ATMOSPHERE

The addition of hydrogen to the cell atmosphere of the nitrogen plasma strongly quenched atomic nitrogen line radiation. The Balmer lines of hydrogen were observed. A spectrum was taken of a pure nitrogen plasma just after the hydrogen experiment. The comparison shows that NH and N_2^+ radiation is greatly enhanced in a hydrogen atmosphere, whereas N_2 is only slightly enhanced. The OH intensity remained about the same except for the strong appearance of the ${}^sR_{21}$ branch of the (0, 0) band which had been observed only weakly before.

A summary of the two spectral comparisons in the normal shock region follows:

N_2 in H_2:	N_2^+	NH	H	OH	N_2	NO
N_2 Only:	N_2^+	N	NH	OH	N_2	NO

4.5 NITROGEN PLASMA IN AN ARGON ATMOSPHERE

In contrast to hydrogen, argon atomic radiation did not appear, and argon did not quench the atomic nitrogen lines. There was no

apparent change in the spectra of the nitrogen plasma when the argon was added.

4.6 NITROGEN-ARGON PLASMAS IN AN NaOH SPRAY

Small droplets of NaOH were sprayed into the plasma stream between the arc and the shock. In nitrogen, a bright orange glow was observed which is attributed to the sodium D-line resonance radiation. No N_2^+ bands were observed; weak N_2, H, and N, strong NH and OH, and metallic lines from the stainless steel spray tube were observed.

In argon, the stream shrank dimensionally and appeared red in color. The spectra showed no Na lines, but extremely strong H, NH, and OH, strong A and N_2, and some N_2^+ and O radiation. (Presumably the extremely strong hydrogen alpha line produced the red color.)

A comparison of the two cases in the normal shock region follows:

NaOH in N_2:	Na	OH	NH	N_2	N	H	
NaOH in A:	OH	NH	H	N_2^+	A	O	N_2

SECTION V
DISCUSSION OF EXPERIMENTAL RESULTS - EXCITATION MECHANISMS

The mean lifetimes of excited atoms and molecules in the nitrogen plasma are on the order of 10^{-6} to 10^{-8} sec, as for the argon plasmas previously studied (Ref. 1). Velocities at the exit of the arc-jet are not more than 5×10^5 cm/sec so that almost all the radiation from states excited within the discharges should occur within 1 cm or less. Temperatures, both of the gas (~200°K) and electrons (~5000°K), are insufficient to produce the observed radiation. Thus, to account for radiation throughout the free-jet plume, some other mechanism must exist. One energy source which seems to account for the observed performance is long-lived energy carriers such as metastable atoms. To account for the excitation producing the observed lines and bands, the energy carriers must encompass a range from 2 to 16 ev, as illustrated by the energy level diagram (Fig. 6). Thus, the search for the energy source must encompass several kinds of carriers.

The following sections are discussions of the various types of energy exchange reactions believed to be possible, with emphasis on

the ones believed to be the most probable. The discussion is presented in the same order as the experimental results in Section IV.

5.1 NITROGEN PLASMA

Possible excitation mechanisms for the spectra observed using the pure nitrogen flow through the arc-jet are:

1. Direct Excitation by Electron-Atom /Molecule Collisions. In the arc region where the electron current density is large, electron-heavy particle collisions account for most of the thermal heat addition to the gas, the dissociation, the electronic excitation, and the ionization. Based on experience with similarly produced argon plasma (Ref. 4), the neutral nitrogen plasma which flows through the arc has an electron density of some 1 percent of the total number of particles, and the electron temperature (~17,000°K) will decrease along the expanded plume to a value near 5000°K (approximately 0.5 ev). Thus, electrons could not produce an appreciable number of excited atoms or molecules with excitation energies above 1 or 2 ev. Thus, excitation from the ground state of levels, other than vibrational energies of molecules, by electron collisions is highly improbable. However, if molecular metastable states exist in appreciable quantities, further excitation to higher states by electron collisions may be an important mechanism of excitation, just as for argon.

2. Atomic Metastable Collisions with Various Molecules. An over-population of the nitrogen atomic metastables of 2.38 and 3.58 ev is most probably present. It was pointed out in Section III that energy transfer is most probable when the donor and receiver energy levels are very close. Since the metastable energies are near those of the excited levels of N_2^+ and the molecular impurities that contribute so heavily to the spectra, they would be expected to transfer their energies by means of collisions of the second kind. These molecules will already have several electron volts of vibrational energy in the ground electronic states. Thus, reactions of the form

$$N^m + M^{v_1} \longrightarrow N + M^n$$

$$M^n \longrightarrow M^{v_2} + h\nu^*$$

where M denotes some impurity molecule, are possible (Ref. 12). There is, apparently, a large cross section for this type of reaction, as evidenced by the observed strong argon metastable-nitrogen molecule reaction (Ref. 2). In the spectra observed in this study, M^v may be OH, NH,

*Superscript "v" denotes vibrational excitation; superscript "n" denotes electronic excitation to the nth state.

N_2^+, or NO, all of which exhibit strong bands. The most probable are N_2^+ and NH, according to Fig. 6.

Another nitrogen atomic metastable has been reported (Ref. 7), the $^6S^0$ level at 17.2 ev carried in a complex form of N_4. Although little is known about this level, it is energetically possible that it could distribute its energy to the upper states of the nitrogen atom and thus produce the atomic line radiation observed from levels as high as 15 ev. According to Ref. 7, one result of this level should be an enhanced population of the $3s_o\,^2P$ level, and thus a very strong atomic line should appear at 1743 Å. This explanation for the N-line radiation is only a tentative one, and further study is required. An important factor would be whether the line intensities obey the equation derived from a Maxwell-Boltzmann distribution of states.

3. Nitrogen Molecular Metastable Collisions with Other Species. The molecular metastable states of nitrogen range in energy from 6.2 to 8.9 ev and have half-lives up to 1 sec. As is seen in Fig. 6, the probability of excitation of impurity molecules by direct collisions of N_2 metastables appears small because energy levels of interest do not lie near them, even though the impurity molecules may use several electron volts as vibrational energy.

Reaction equations involving several metastables, both atomic and molecular, can be written to account for energies needed to excite the $N_2(C^3\Pi_u)$ level, thus producing the second positive system of N_2:

$$N_2^m + N^m \longrightarrow N_2\,(C\,^3\Pi_u) - N$$

$$N_2\,(C\,^3\Pi_u) \longrightarrow N_2\,(B\,^3\Pi_g) + h\nu \quad \text{(second positive system)}$$

Energetically, the process

$$N_2^m + N^m \longrightarrow N_2\,(X\,^1\Sigma_g^+) + N^n$$

$$N^n \longrightarrow N + h\nu \quad \text{(N-line radiation)}$$

can populate ten excited levels of N, and perhaps more, with N_2^m vibration energy. These possible processes seem very unlikely because of the small population of either metastable relative to the total particle population. The number of such collisions is probably insufficient to account for the atomic line and second positive band radiation observed.

4. Excitation by Trapped Vibrational States. In Ref. 13, it is shown that the vibrationally excited ground state of nitrogen can excite the sodium atom to its first radiative level. The level v″ = 7 has 2 ev, v″ = 15

has 4 ev, and v'' = 24 has 6 ev so that enough energy is available to excite N_2^+ and the molecular impurities. This is a competing process with the N metastables, and it is difficult to assign an importance to it.

5. Chemiluminescence. In flames and discharges, emissions of the (0, 0), (1, 0), and (2, 0) bands of OH are commonly observed. The excitation is presumed to originate in chemical reactions involving H, H_2, OH, and O_2 and is discussed in Ref. 11. If similar reactions occur in the nitrogen plasma, some initial energy mechanism is needed to dissociate H_2O and OH in the boundary region. These energies, approximately 5 ev, are difficult to account for except by N_2 metastables. The excitation of NH and NO can perhaps be similarly explained by a chemiluminescence process, but no precedence could be found in literature to support this mechanism.

6. Photon Absorption. Ozone, supposedly produced by ultraviolet radiation emanating from the plasma and passing through the quartz window, could be smelled outside the test cell. Thus, excitation by self-absorption must also be considered. If the self-absorption within the plasma is appreciable, then the excitation of upper states can be explained on that basis. A study of the radiation in the vacuum ultraviolet would shed more light on this possibility.

In summary then, the strong radiation from the low-lying impurity molecules can be explained on the basis of either (1) an overpopulation of atomic metastables which give up their energy by collisions of the second kind, (2) transfer from vibrationally trapped energy in the N_2 ground state molecule, or (3) chemical reactions which leave the specie in an electronically excited state. Of these three, the first is preferred because of its prominence in argon-nitrogen plasmas (Ref. 2) and because of the possible existence of the forbidden atomic nitrogen lines. Three explanations were also given for the lines and bands emanating from upper excited states, namely (1) existence of a metastable atomic level of nitrogen at 17.2 ev, (2) metastable-metastable collisions, and (3) photon absorption. No preference of these three can be stated without further study.

5.2 ARGON PLASMA

An overpopulation of argon metastable atoms has been established for the RTF Research argon plasma jet. It was expected that the nitrogen second positive system (nitrogen coming from cell leaks and swept into the boundary) would be selectively excited by the argon metastables since the energy levels are so close. This was borne out in the arc region because N_2 radiation is dominant there.

The collision process is

$$A^m + N_2(X\ ^1\Sigma_g^+) \longrightarrow A + N_2(C\ ^3\Pi_u)$$

$$N_2(C\ ^3\Pi_u) \longrightarrow N_2(B\ ^3\Pi_g) + h\nu \text{ (second positive system)}$$

An explanation for the N_2^+ radiation is needed. The difficulty is that it takes 15.6 ev to ionize N_2 but only 3.2 ev to excite the N_2^+ to a radiative level; the argon metastable atom energies of 11.55 and 11.72 ev are unsatisfactory for either process. After emission of the second and first positive systems, the nitrogen molecule is in the $A^3\Sigma_u^+$ metastable state at 6.17 ev. The collisional process,

$$N_2(A\ ^3\Sigma_u^+) + A^m \longrightarrow N_2^+(X\ ^2\Sigma_g^+) + e^- + A + 2.3 \text{ ev}$$

may then possibly occur, or, given some N_2 vibrational energy,

$$N_2^v(A\ ^3\Sigma_u^+) + A^m \longrightarrow N_2^+(B\ ^2\Sigma_u^+) + e^- + A$$

$$N_2^+(B\ ^2\Sigma_u^+) \longrightarrow N_2^+(X\ ^2\Sigma_g^+) + h\nu \text{ (first negative system)}$$

However, a more probable process would seem to be the charge exchange reaction,

$$A^+ - N_2 \longrightarrow A + N_2^+$$

Either of these processes would explain the observed buildup of N_2^+ radiation downstream.

The appearance of the NH bands indicates that both N_2 and H_2O are being dissociated by some process. The following reactions could account for the dissociation:

$$A^m + N_2 \longrightarrow A + N + N + 1.9 \text{ ev}$$

$$A^m + N_2^v \longrightarrow A + N + N^m$$

These nitrogen metastables could then presumably cause excitation of the various low-lying energy levels of the impurity molecular species, OH and NH.

5.3 NITROGEN-ARGON MIXTURE

The results obtained when various nitrogen-argon mixtures were run in the arc-jet served to verify the interpretations of the spectra made on pure nitrogen and pure argon plasmas, individually. No

important characteristics of the mixture that were not characteristic of the individual plasmas were noted.

5.4 NITROGEN PLASMA IN A HYDROGEN ATMOSPHERE

Hydrogen effectively quenched nitrogen atomic radiation; hydrogen Balmer lines appear in place of nitrogen atomic lines. The levels of the Balmer series are from 12.0 to 13.6 ev or slightly below the excited nitrogen levels. The very strong NH radiation is an indication that many of the free nitrogen atoms have united with hydrogen atoms instead of being excited to radiative levels. This depletion of free nitrogen atoms is believed to be the quenching mechanism. An important point to note is that a high energy excitation mechanism is still needed for the Balmer lines, perhaps supporting the presence of the N $^6S^0$ metastable levels since photon absorption or molecular metastable collisions would not seem likely to produce H atomic excitation. No explanation can be given for the apparent enhancement of N_2^+ radiation.

5.5 NITROGEN PLASMA IN AN ARGON ATMOSPHERE

Insignificant energy transfer to argon occurred to produce argon line radiation. The excited levels of nitrogen and argon are energetically similar, but it appears that some overpopulated carrier near the excitation energy is a requirement in order to excite the spectra. The inertness of argon as contrasted to hydrogen is evident.

5.6 NITROGEN – ARGON PLASMAS IN AN NaOH SPRAY

Atomic sodium was excited in nitrogen but not in argon, whereas strong OH radiation appeared in both. Neglecting the OH excitation would give strong evidence of selective metastable excitation of Na because argon metastables are unable to excite the sodium, but nitrogen metastables are. This would then be explainable on the basis of the energy difference between the metastables and the excited Na states. However, the vibrationally excited nitrogen may be responsible for all or some of the sodium excitation (Ref. 13). The absence of N_2^+ bands in the case of nitrogen indicates a dependence of N_2^+ excitation on nitrogen atom metastables and hence a preferred excitation of sodium by the metastables.

A consideration of the excitation energy involved shows that the absence of Na and the strong appearance of OH in the argon plasma are contradictory. This implies that OH is perhaps not excited from ground state in argon but in some other process, such as chemiluminescence.

SECTION VI
USABLE LINES AND BANDS FOR TEMPERATURE MEASUREMENT

In the use of spectral methods for the measurement of temperatures, it is important that the methods of excitation of the levels giving rise to the lines and bands appearing in the spectra be known (Ref. 8, p. 205). The meaning of temperature is based on a Boltzmann distribution of states as established by purely thermal excitations. The distribution in emission bands occurring in electric discharges is usually a Boltzmann type. However, for excitation by collisions with metastable atoms, by chemical reactions or by dissociation of polyatomic molecules. nonthermal-type distributions which do not lead to a temperature measurement occur. Since, for instance, nitrogen metastable atoms appear to play an excitation role in the nitrogen plasma, a detailed study of the line intensity distributions within bands will be necessary before rotational or vibrational temperature measurements can be interpreted. An electronic excitational temperature as obtained from atomic nitrogen lines would also not be usable until the excitation process responsible for populating the upper levels is established (Ref. 4). This is especially of concern since the excitation mechanism has not been firmly established.

It is also necessary to establish the behavior of the distributions of rotational and vibrational levels when rapid expansion to low pressure is involved. In this case, the collision frequency may not be sufficient to produce an equilibrium between vibration and heavy particle translation. Also, it is not completely clear what role the electrons play in vibrational and rotational excitation. Experience has shown that electron temperatures do not relax to the gas temperature in the plasma plume and remain many times larger (Ref. 4). Thus an investigation of their role in vibrational and rotational excitation is a necessity.

As shown in Fig. 5, the N_2 second positive system and the N_2^+ first negative system overlap. Impurity radiation from NH and OH masks the strongest bands of the weakly radiating N_2 second positive system. In the following table, the usefulness of the two nitrogen systems is summarized.

N_2 SECOND POSITIVE SYSTEM

Band	Head λ, Å	Comments
(2, 0)	2976.8	Clear, very weak
(1, 0)	3159.3	Masked by OH (3064 Å)
(0, 0)	3371.3	Masked by NH (3370 Å)
(0, 1)	3576.9	Masked by N_2^+ (1, 0)
(0, 2)	3804.9	Clear, very weak

N_2^+ FIRST NEGATIVE SYSTEM

Band	Head λ, Å	Comments
(1, 0)	3582.1	Masked by (0, 1) N_2
(0, 0)	3914.4	Partially masked by N_2 (3, 6) (3894.6 Å)
(0, 1)	4278.1	Masked by N_2 (1, 5) (4269.7 Å)
(0, 2)	4709.2	Clear, weak

Greater instrumental resolution can extend the usefulness of these bands when weakly masked by others by use of only a few of the multiplets in the band, if it can be established that a Boltzmann distribution exists.

The rotational temperature measurement of nitrogen using the bands of the second positive system is discussed in Ref. 14. The rotational temperature measurement of N_2^+ using the (0, 0) band of the first negative system is discussed in Ref. 8, p. 206, and contains an additional reference. In Ref. 15, the rotational and vibrational temperatures of nitrogen have been measured by using N_2^+ bands because the N_2^+ was excited directly from N_2 in an electron beam. The necessary information for obtaining a rotational temperature from OH emission is given in Ref. 16. For an adequate determination of electron temperature, atomic nitrogen infrared multiplets must be used because transition probabilities are known for only a few lines in the visible range, and the upper excited levels for these lines were not studied in the present work.

SECTION VII
CONCLUDING REMARKS

In summary, the existence of the long, radiating plume at relatively low gas temperatures implies the existence of long-lived, energy-carrying states. These may consist of atomic metastables, molecular electronic metastables, and trapped vibrational states. The strong radiation from molecular species having excitation energies from 3 to 5 ev, even though these species (N_2^+, OH, NH, and NO) make up a very small portion of the gas, strongly implies that collisions of the second kind are a prevalent mechanism. That is, collisions between N metastables at 2.38 and 3.58 ev and molecular species produce excited states of the molecular species. Radiation from atomic nitrogen states as large as 15 ev is not easy to explain; ultraviolet absorption may play a dominant role here, but the influence of a metastable state at 17.2 ev as reported

in the literature cannot be overlooked. Radiation from the C $^3\Pi_u$ state of N_2 at 11.5 ev and greater indicates that the molecular metastable states from 8.4 to 8.9 ev and greater may be further excited via electron collisions giving rise to the second positive system of N_2. Further study of several other mechanisms which are discussed in the report is necessary to confirm their existence.

Further investigation in at least two areas is recommended. First, a study of the vibrational bands of the species OH and N_2^+ should be made in order to detect if a selective excitation of the vibrational levels exists. Such would be strongly suspected since the N metastable energy is discrete. In order to excite the molecular electronic state whose ground level is larger than the N metastable energy, the molecule would be required to be in a vibrational state suitably above the ground electronic state.

The second area suggested for further investigation is the ultraviolet region extending from 3000 to about 1000 Å. A great amount of insight into the basic mechanisms may be gained by such a study. In particular, the existence of the 17.2-ev nitrogen metastable state may be confirmed or disproved. Furthermore, study of the absorption of ultraviolet lines and the subsequent influence on the atomic radiation may be very rewarding. It is even possible that selective absorption of the three principal ultraviolet lines can be used to determine the densities of N atoms in the neutral and metastable states.

Very few molecular bands are free enough from overlapping bands of other species to be useful for rotational temperature measurement. However, this problem may not be as serious as it seems from these studies. Better resolution would undoubtedly show that the structure of the strong bands can be distinguished and that careful measurement of wavelengths may allow enough of the basic structure to be identified so that an intensity distribution can be found. It is important in temperature measurement to establish the existence of a Maxwellian distribution of states; once such distribution is established, then only two or three lines need to be measured to obtain a temperature. Thus, an apparatus should be constructed such that no impurities, mainly water vapor, can enter the stream; this source can be used to establish whether the distribution is Maxwellian. Then the technique of using only one or a few lines can be developed with more confidence, although it still must be established that the impurities do not distort the distribution.

REFERENCES

1. McGregor, W. K. and Dooley, M. T. "Spectroscopic Diagnostics of a Gerdien-Type Plasma Stream Using Argon." Temperature, Vol. 3, Part 2, 1962, p. 467; also, McGregor, W.K., Dooley, M.T., and Brewer, L. E. "Diagnostics of a Plasma Flame Exhausting to Atmospheric Pressure." AEDC-TR-61-16 (AD269499), January 1962.

2. Brewer, L. E. and McGregor, W. K. "The Radiative Decay of Metastable Argon Atoms in a Low-Density Argon Plasma Stream." AEDC-TDR-63-5 (AD294543), January 1963.

3. Brewer, L. E. and McGregor, W. K. "Excitation of Nitrogen by Metastable Argon Atoms." Physics of Fluids, Vol. 6, No. 9, September 1963.

4. Brewer, L. E. "Spectroscopy of a Supersonic Plasma: I. Excitation Mechanism." AEDC-TDR-64-151 (AD602714), July 1964; also "Spectroscopy of a Supersonic Plasma: II. Excitation Temperature." AEDC-TDR-64-196 (AD447735), September 1964.

5. McGregor, W. K. and Brewer, L. E. "Spectroscopy of a Supersonic Plasma: III. Electron Temperature Measurements in Argon Plasma by Two Independent Methods." AEDC-TR-65-131 (AD473660), November 1965.

6. Brewer, L. E., McGregor, W. K., and Dooley, M. T. "The Performance and Temperature of a Gaseous Nitrogen Stabilized Arc Plasma Generator." AEDC-TDR-62-113 (AD282890), August 1962.

7. Prag, A. B. and Clark, K. C. "Excitation Mechanism for the Nitrogen Pink Afterglow." Journal of Chemical Physics, Vol. 39, No. 3, August 1963, p. 799.

8. Herzberg, G. Spectra of Diatomic Molecules. D. van Nostrand Company, New York, 1950.

9. Wilkinson, P. G. and Mulliken, R. S. "Forbidden Band System in Nitrogen. II. The $a' \, {}^1\Sigma_u^- \rightarrow X \, {}^1\Sigma_g^+$ System in Absorption." Journal of Chemical Physics, Vol. 3, No. 3, September 1959, p. 674.

10. Kenty, C. "Collisions Involving Metastable N_2 Molecules in Discharges and Afterglows in a Rare Gas plus N_2." Atomic Collision Processes, Ed. M. R. C. McDowell, North Holland Publishing Company, 1964, p. 1133.

11. Massey, H. S. W. and Burhop, E. H. S. Electronic and Ionic Impact Phenoema. Clarendon Press, Oxford, England, 1952.

12. Mitchell, A. C. G. and Zemansky, M. W. Resonance Radiation and Excited Atoms. Cambridge University Press, England, 1934.

13. Starr, W. L. "Excitation of Electronic Levels of Sodium by Vibrationally Excited Nitrogen." Journal of Chemical Physics, Vol. 43, No. 1, July 1965, p. 73.

14. Robinson, D. "Heavy Particle Temperature Measurements in a Nitrogen Plasma by a Spectroscopic Method." Journal of Quantitative Spectroscopy and Radiative Transfer, Vol. 4, p. 335.

15. Muntz, E. P. "Measurement of Rotational Temperature, Vibrational Temperature, and Molecular Concentration, in Non-Radiating Flows of Low Density Nitrogen." Institute of Aerophysics, University of Toronto, UTIA Report No. 71 (AFOSR TN-60-499), April 1961.

16. Dieke, G. H. and Crosswhite, H. M. "The Ultraviolet Bands of OH." Journal of Quantitative Spectroscopy and Radiative Transfer, Vol. 2, April/June 1962, pp. 97-199.

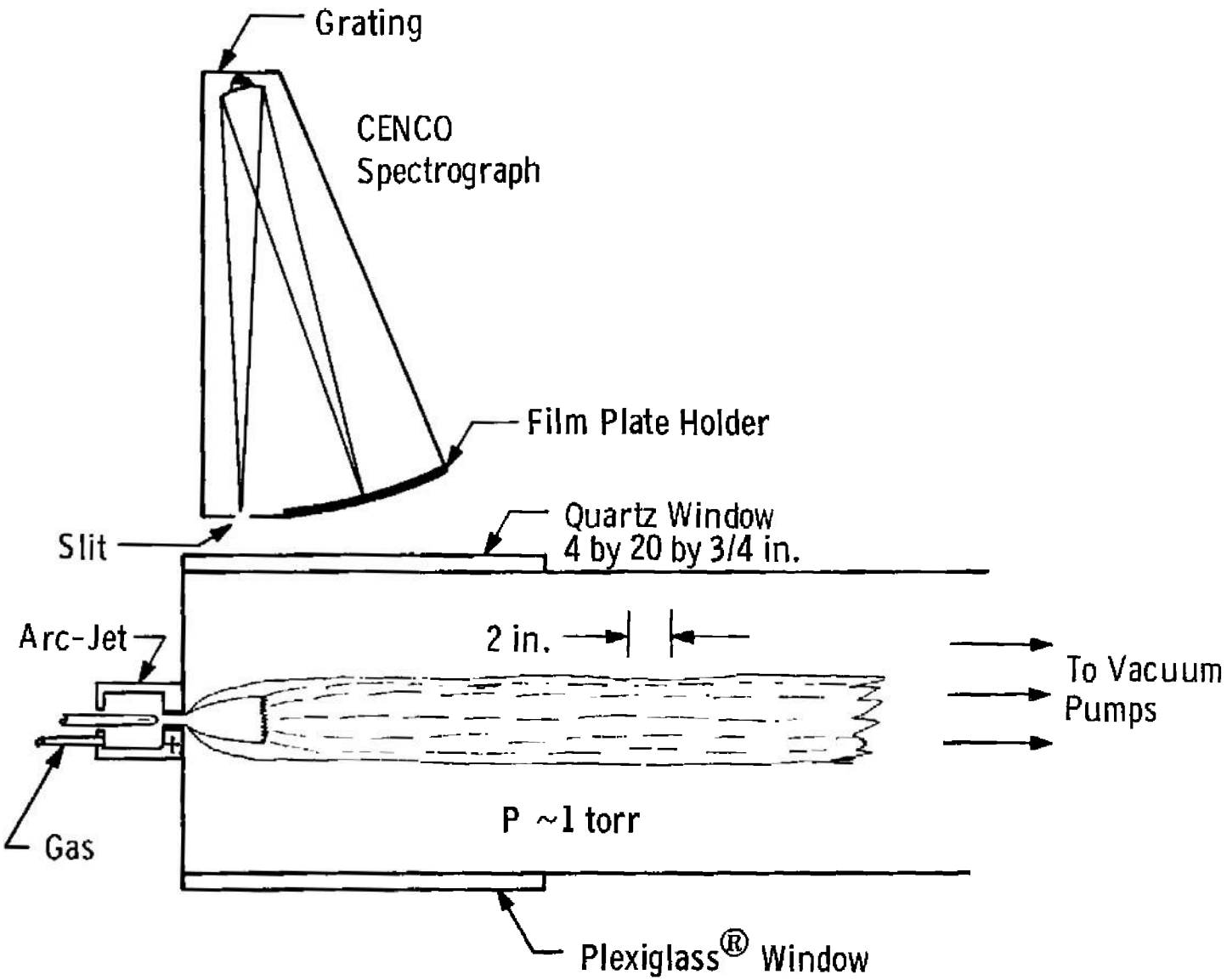

Fig. 1 Physical Arrangement of Arc–Jet and Low Pressure Test Cell

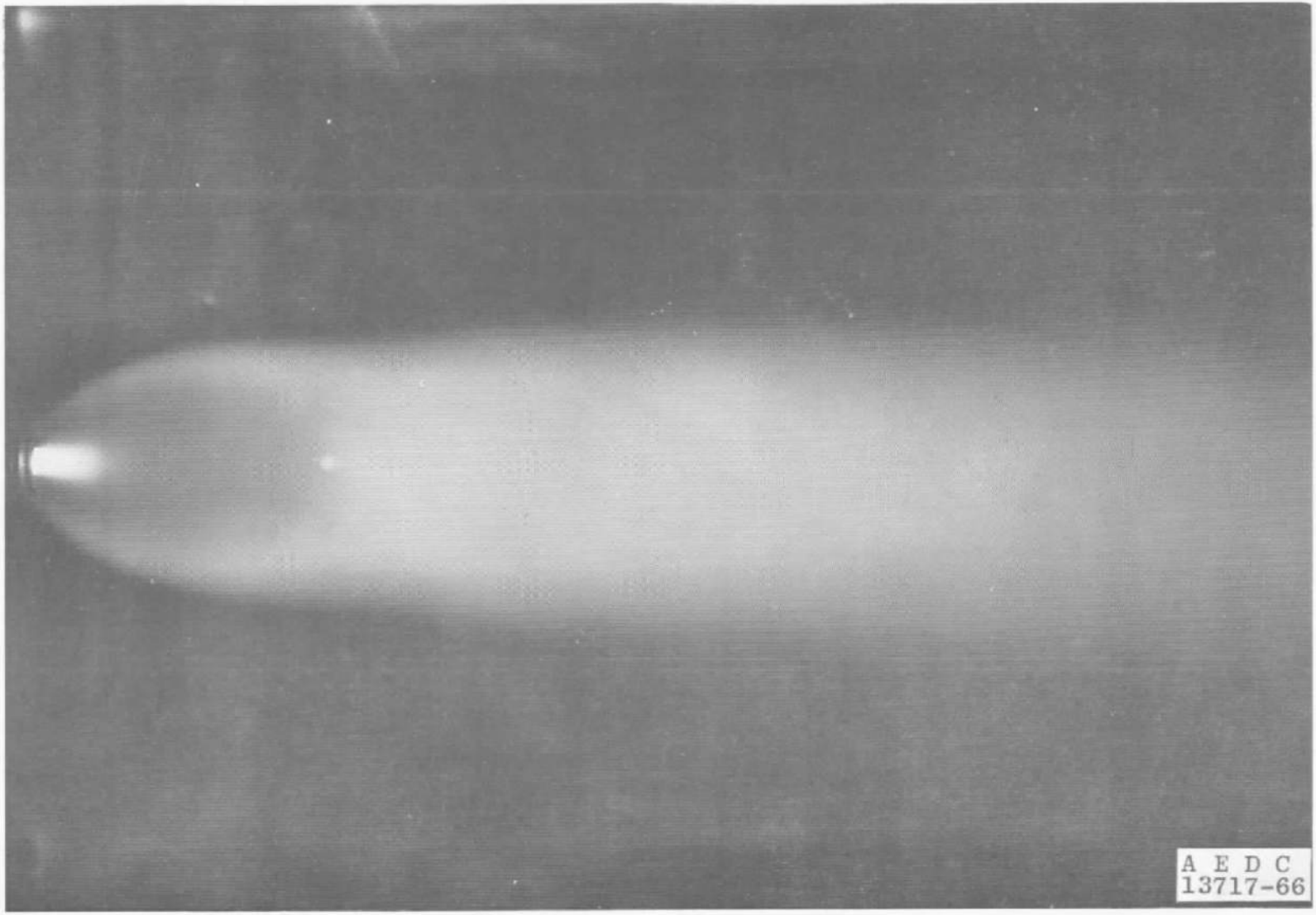

Fig. 2 Photograph of Nitrogen Plasma Stream

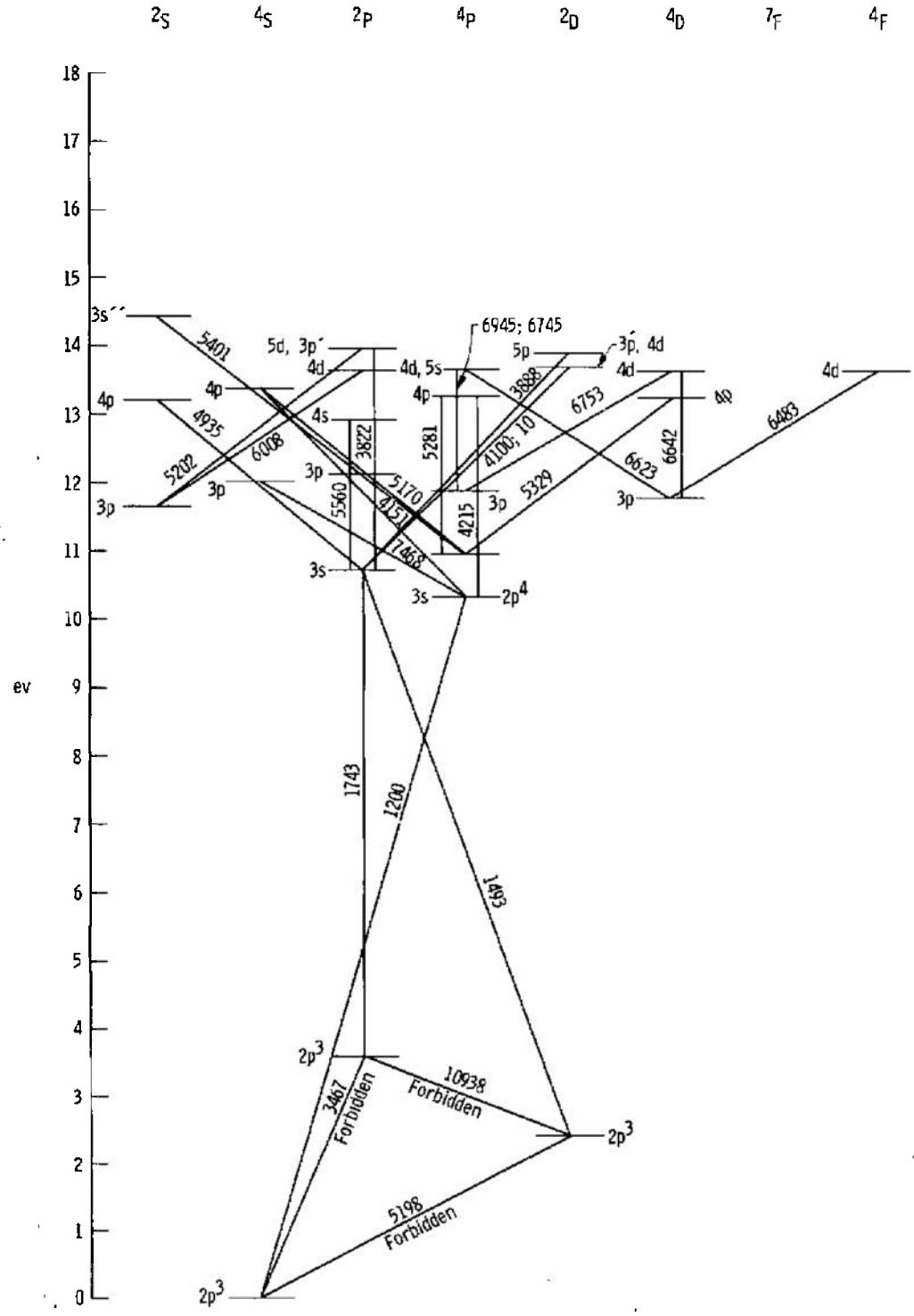

Fig. 3 Energy Level Diagram of the Nitrogen Atom

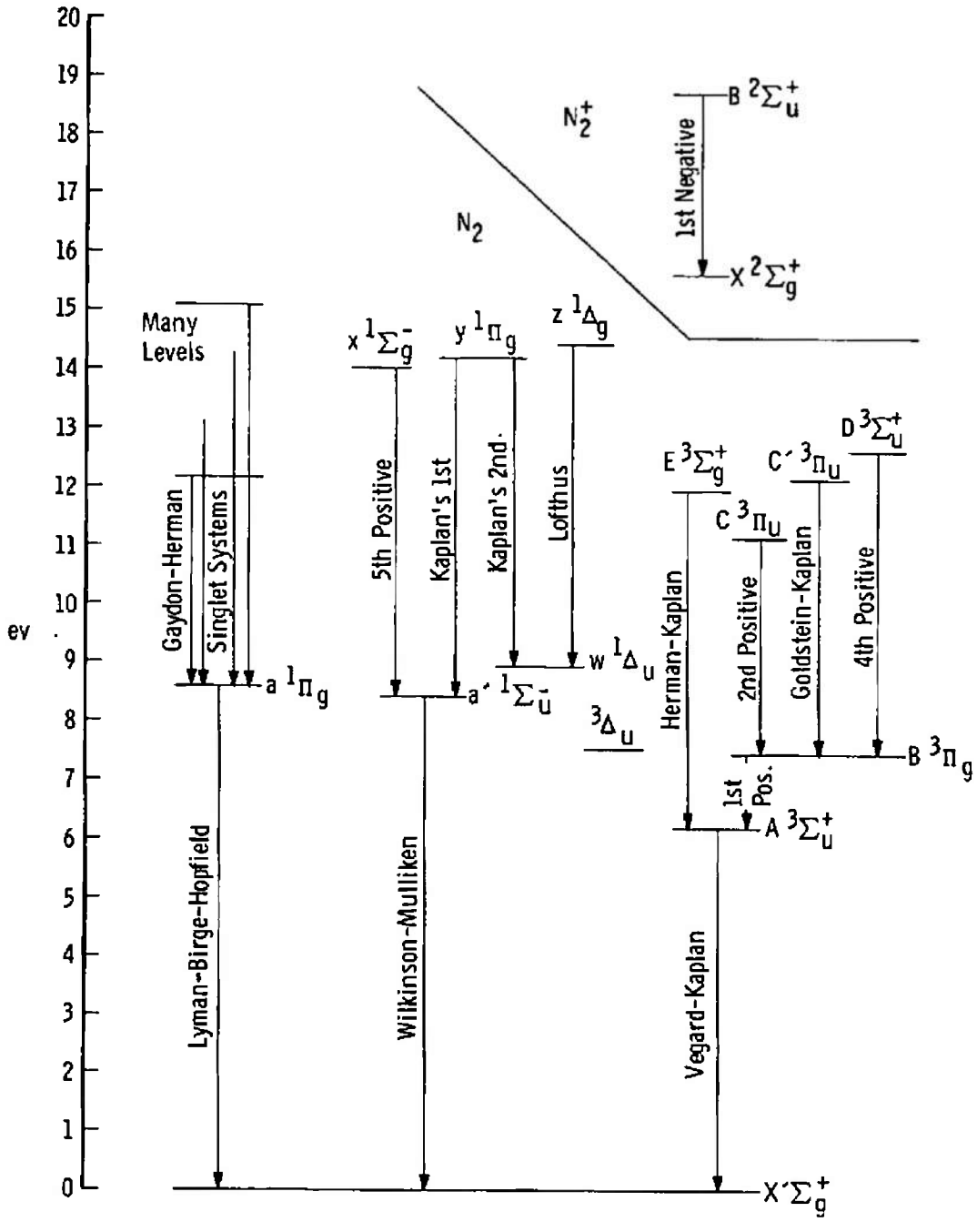

Fig. 4 Partial Energy Level Diagram of the N_2 and N_2^+ Molecules

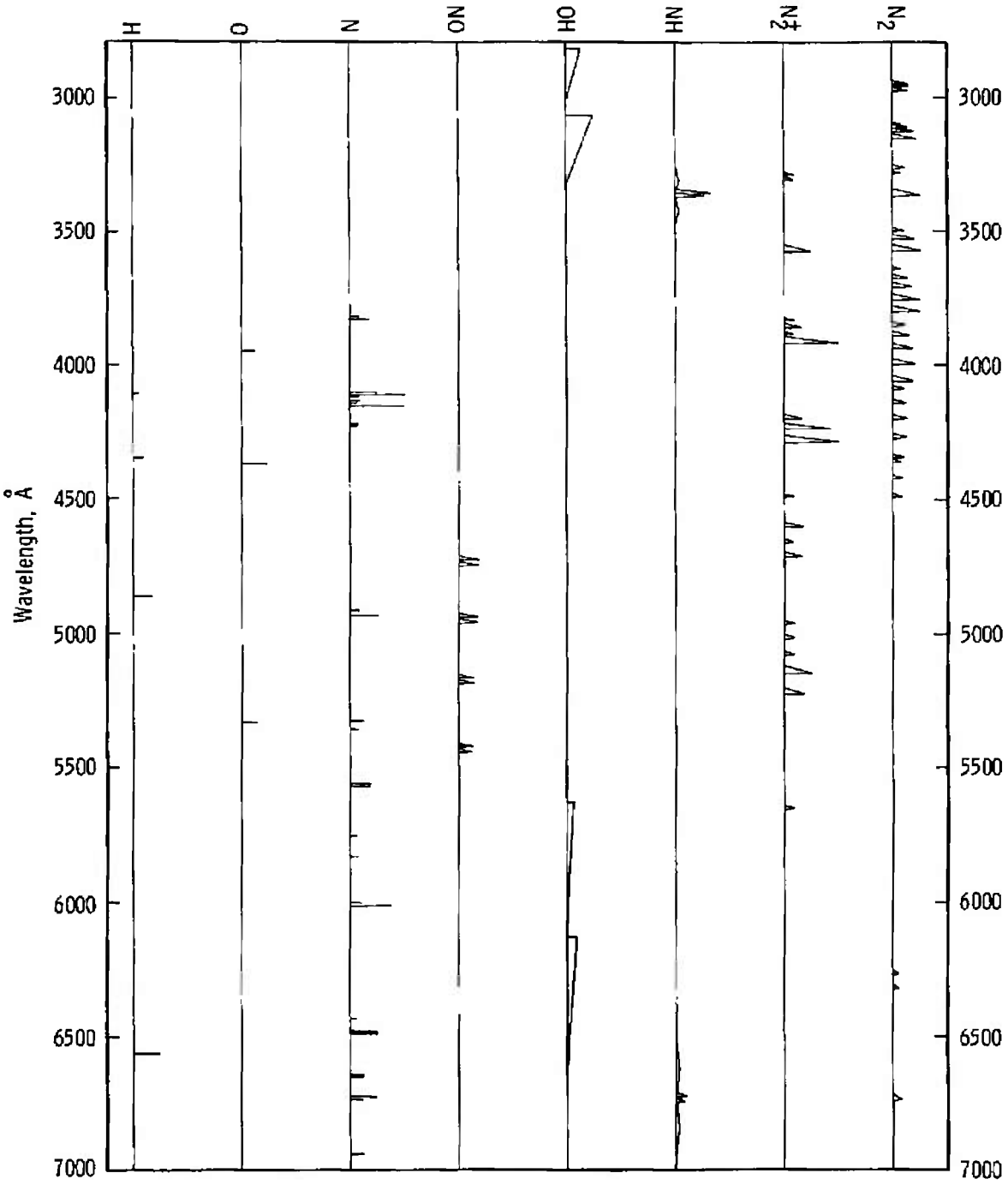

Fig. 5 Composite Diagram of Spectral Lines and Bands in Nitrogen Plasma

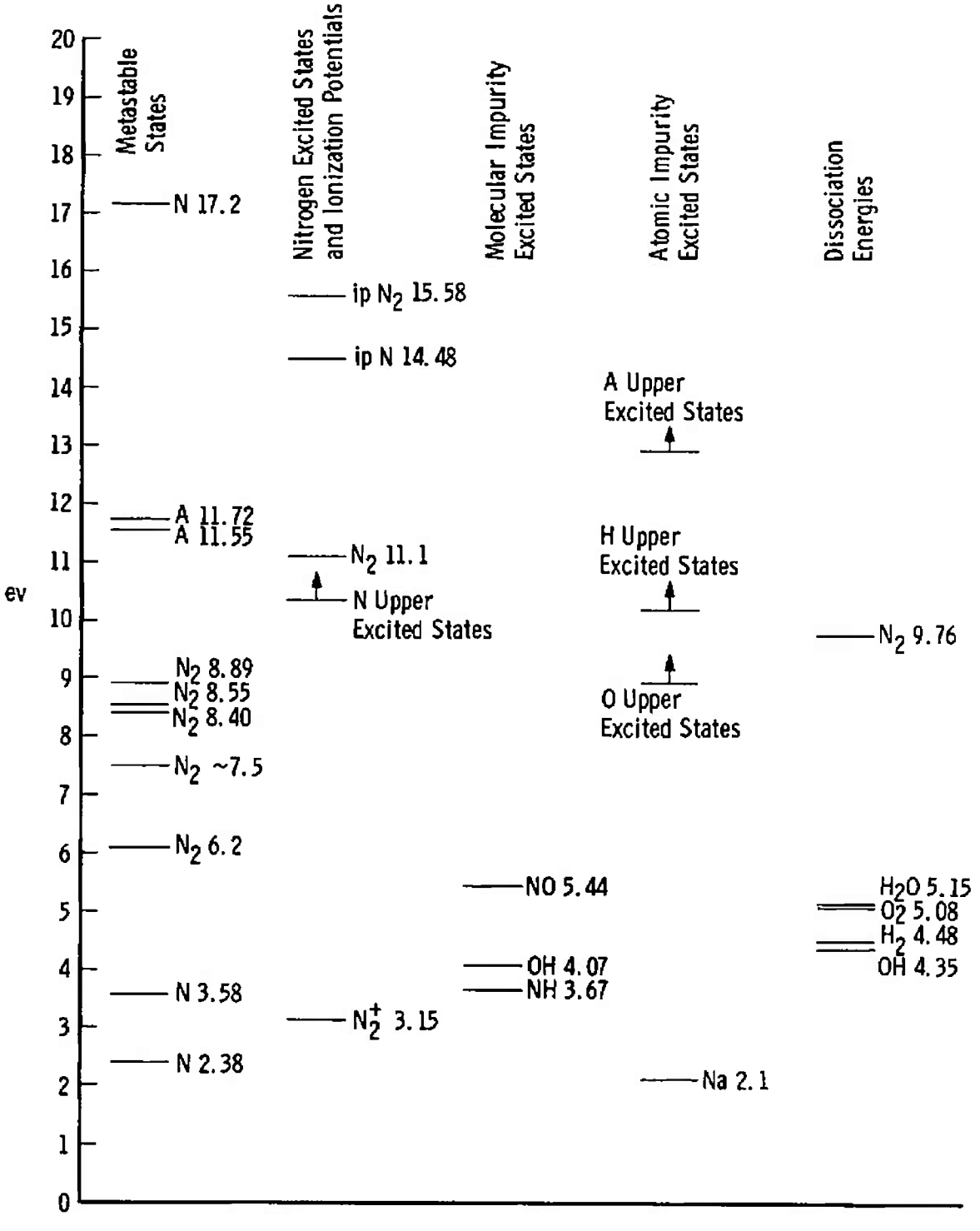

Fig. 6 Comparative Energy Level Diagram for All Species Observed in Nitrogen-Argon Plasmas

UNCLASSIFIED
Security Classification

DOCUMENT CONTROL DATA - R&D

(Security classification of title, body of abstract and indexing annotation must be entered when the overall report is classified)

1 ORIGINATING ACTIVITY *(Corporate author)* Arnold Engineering Development Center, ARO, Inc., Operating Contractor, Arnold Air Force Station, Tennessee	2a REPORT SECURITY CLASSIFICATION UNCLASSIFIED 2b GROUP N/A

3 REPORT TITLE

SPECTRAL CHARACTERISTICS OF A LOW DENSITY ARC-HEATED NITROGEN PLASMA

4 DESCRIPTIVE NOTES *(Type of report and inclusive dates)*

N/A

5 AUTHOR(S) *(Last name, first name, initial)*

Price, L. L. and McGregor, W. K., ARO, Inc.

6 REPORT DATE October 1966	7a TOTAL NO OF PAGES 31	7b NO OF REFS 16

8a CONTRACT OR GRANT NO. AF40(600)-1200 b PROJECT NO. 8951 c Program Element 61445014 d Task 895105	9a ORIGINATOR'S REPORT NUMBER(S) AEDC-TR-66-139 9b OTHER REPORT NO(S) *(Any other numbers that may be assigned this report)* N/A

10 AVAILABILITY/LIMITATION NOTICES

Qualified users may obtain copies of this report from DDC, and distribution of this report is unlimited.

11 SUPPLEMENTARY NOTES N/A	12 SPONSORING MILITARY ACTIVITY Arnold Engineering Development Center Air Force Systems Command Arnold Air Force Station, Tennessee

13 ABSTRACT

The visible and near ultraviolet spectrum from free jets of nitrogen plasmas produced by an arc-jet and exhausted into a low pressure (~1 torr) test cell was photographed under varying conditions. The spectral characteristics were compared to the spectra obtained from argon plasmas produced in the same apparatus. The characteristics of the argon spectra have been attributed to the existence of long-lived, metastable argon atoms; the nitrogen spectral characteristics were found to be interpretable in a similar way. The spectrum consisted of N_2^+ (first negative) and N_2 (second positive) band systems, N atomic lines, and strong impurity radiation from OH, NH, and NO. The impurity bands can be explained on the basis of the ambient test cell gases which mix in the jet boundary and become excited by collision of the second kind with nitrogen atomic and molecular metastables. Several gases, chiefly argon, were mixed with the nitrogen in order to investigate the possible collisions of the second kind and thus determine the mechanisms responsible for the radiation. Several possible mechanisms are proposed in the report, but complete explanation must await further study. The utility of the spectrum for diagnostic purposes was also investigated, and it was found that portions of the principal molecular bands are masked by the impurity radiation and that high resolution is required for their use in order to measure rotational temperature.

DD FORM 1 JAN 64 1473

UNCLASSIFIED
Security Classification

UNCLASSIFIED
Security Classification

14 KEY WORDS	LINK A ROLE	LINK A WT	LINK B ROLE	LINK B WT	LINK C ROLE	LINK C WT
1 nitrogen plasmas -- Heated						
2 argon plasmas						
~~low density~~						
3 arc heated plasmas 15.20						
~~spectrum analysis~~						
~~free jets~~						
~~arc jets~~						
4 Nitrogen plasmas -- Spectrum Analysis						
5 " " -- Spectral characteristics						

INSTRUCTIONS

1. ORIGINATING ACTIVITY: Enter the name and address of the contractor, subcontractor, grantee, Department of Defense activity or other organization *(corporate author)* issuing the report.

2a. REPORT SECURITY CLASSIFICATION: Enter the overall security classification of the report. Indicate whether "Restricted Data" is included. Marking is to be in accordance with appropriate security regulations.

2b. GROUP: Automatic downgrading is specified in DoD Directive 5200.10 and Armed Forces Industrial Manual. Enter the group number. Also, when applicable, show that optional markings have been used for Group 3 and Group 4 as authorized.

3. REPORT TITLE: Enter the complete report title in all capital letters. Titles in all cases should be unclassified. If a meaningful title cannot be selected without classification, show title classification in all capitals in parenthesis immediately following the title.

4. DESCRIPTIVE NOTES: If appropriate, enter the type of report, e.g., interim, progress, summary, annual, or final. Give the inclusive dates when a specific reporting period is covered.

5. AUTHOR(S): Enter the name(s) of author(s) as shown on or in the report. Enter last name, first name, middle initial. If military, show rank and branch of service. The name of the principal author is an absolute minimum requirement.

6. REPORT DATE: Enter the date of the report as day, month, year; or month, year. If more than one date appears on the report, use date of publication.

7a. TOTAL NUMBER OF PAGES: The total page count should follow normal pagination procedures, i.e., enter the number of pages containing information.

7b. NUMBER OF REFERENCES: Enter the total number of references cited in the report.

8a. CONTRACT OR GRANT NUMBER: If appropriate, enter the applicable number of the contract or grant under which the report was written.

8b, 8c, & 8d. PROJECT NUMBER: Enter the appropriate military department identification, such as project number, subproject number, system numbers, task number, etc.

9a. ORIGINATOR'S REPORT NUMBER(S): Enter the official report number by which the document will be identified and controlled by the originating activity. This number must be unique to this report.

9b. OTHER REPORT NUMBER(S): If the report has been assigned any other report numbers *(either by the originator or by the sponsor)*, also enter this number(s).

10. AVAILABILITY/LIMITATION NOTICES: Enter any limitations on further dissemination of the report, other than those imposed by security classification, using standard statements such as:

(1) "Qualified requesters may obtain copies of this report from DDC."

(2) "Foreign announcement and dissemination of this report by DDC is not authorized."

(3) "U. S. Government agencies may obtain copies of this report directly from DDC. Other qualified DDC users shall request through _____."

(4) "U. S. military agencies may obtain copies of this report directly from DDC. Other qualified users shall request through _____."

(5) "All distribution of this report is controlled. Qualified DDC users shall request through _____."

If the report has been furnished to the Office of Technical Services, Department of Commerce, for sale to the public, indicate this fact and enter the price, if known.

11. SUPPLEMENTARY NOTES: Use for additional explanatory notes.

12. SPONSORING MILITARY ACTIVITY: Enter the name of the departmental project office or laboratory sponsoring *(paying for)* the research and development. Include address.

13. ABSTRACT: Enter an abstract giving a brief and factual summary of the document indicative of the report, even though it may also appear elsewhere in the body of the technical report. If additional space is required, a continuation sheet shall be attached.

It is highly desirable that the abstract of classified reports be unclassified. Each paragraph of the abstract shall end with an indication of the military security classification of the information in the paragraph, represented as *(TS), (S), (C), or (U)*.

There is no limitation on the length of the abstract. However, the suggested length is from 150 to 225 words.

14. KEY WORDS: Key words are technically meaningful terms or short phrases that characterize a report and may be used as index entries for cataloging the report. Key words must be selected so that no security classification is required. Identifiers, such as equipment model designation, trade name, military project code name, geographic location, may be used as key words but will be followed by an indication of technical context. The assignment of links, rules, and weights is optional.

UNCLASSIFIED
Security Classification