RTM 31

Design Of Wheeled Amphibians

AD 637843

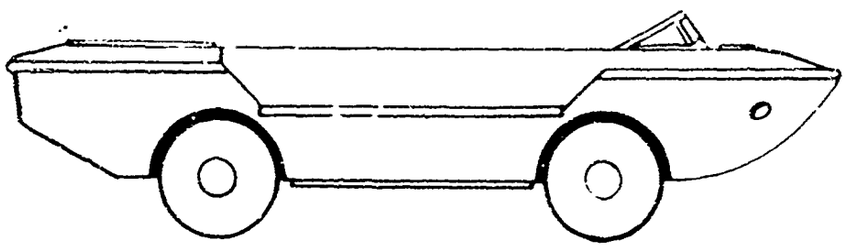

CLEARINGHOUSE
FOR FEDERAL SCIENTIFIC AND
TECHNICAL INFORMATION

Hardcopy	Microfiche		
$13.60	$1.00	134 pp.	as

1 ARCHIVE COPY

PREPARED BY

CHARLES D. ROACH

FOR PRESENTATION TO THE

CHESAPEAKE SECTION
OF THE
SOCIETY OF NAVAL ARCHITECTS
AND MARINE ENGINEERS

APRIL 21, 1960

AT THE

NAVAL WEAPONS PLANT
WASHINGTON, D.C.

DDC
SEP 8 1966
D

U. S. ARMY TRANSPORTATION RESEARCH COMMAND
FORT EUSTIS VIRGINIA

1060

1842-60

A. cl 2

OK for CFST/ per Security Ofcr, 7th Quotin. a 64
9 Sep 66

ACCESSION for
CFSTI WHITE SECTION
DDC BUFF SECTION
UNANNOUNCED
JUSTIFICATION
BY
DISTRIBUTION/AVAILABILITY CODES
DIST. AVAIL. and/or SPECIAL
1

The views expressed herein, although derived from sources within the Department of Defense, do not necessarily reflect the views of the Department of Defense and, at times, may be at variance with the views of the Department of Defense.

* * *

This document contains no information affecting the National defense of the United States within the meaning of the Espionage Laws, Title 18, U.S.C., Sections 793 and 794.

Best Available Copy

RESEARCH TECHNICAL MEMORANDUM 31

DESIGN OF WHEELED AMPHIBIANS

Presented by

Charles D. Roach

to the

Chesapeake Section

of the

Society of Naval Architects and Marine Engineers

at the

Naval Weapons Plant

Washington, D. C.

April 21, 1960

U. S. ARMY TRANSPORTATION RESEARCH COMMAND

FORT EUSTIS, VIRGINIA

CONTENTS

	Page
ACKNOWLEDGMENTS	v
INTRODUCTION	1
LIMITING DIMENSIONS	7
HULL CHARACTERISTICS	15
SPEED CONSIDERATIONS	27
Optimization of Speed and Horsepower	28
Eddy-Making Resistance	32
The Effect of Waves on Speed	35
Propellers and Nozzles	41
LAND MOBILITY	47
VEHICLE SUSPENSION SYSTEM	75
POWER PLANT, TRANSMISSIONS, AND BRAKES	96
FUTURE PROSPECTS	107
REFERENCES	108
APPENDIX	111

ACKNOWLEDGMENTS

The author deeply appreciates the help, guidance, and criticism of the many people whose research and efforts have been drawn upon in this paper. There are so many, that individual acknowledgment of each would be impossible; however, appreciation must be specifically given to the following people or organizations, whose information has unblushingly been used: Lt. Colonel Murray Manley, for his historical research on amphibians as well as his astute analysis of amphibian problems, Roderick Stephens, Jr., for his record of the development of the World War II DUKW and his almost day-to-day guidance of the LARC-5, LARC-15, and BARC projects, during which time the author accumulated much amphibian lore as well as operational experience; Richard Kerr, for his profound knowledge of pneumatic tires and his unparalleled experience in off-road transportation; Allan Murry, for graciously making available the files of Stevens Institute of Technology, the repository of most of the amphibian model basin results in this country; Borg-Warner Corporation, developers of the LARC-5 and LARC-15, for many illustrations and some textual material pertaining to these craft; W. C. Nickum and Sons, for test details of the BARC; The Waterways Experiment Station, for details and illustrations of their test facilities as well as for much of the information regarding the soil-tire relationship; and Samuel Hickson, project engineer for the BARC, LARC-5, and LARC-15, whose genius accounts in a large measure for the success of these vehicles.

INTRODUCTION

Unlike many instruments of war, the wheeled amphibian has no precursor. Indeed, a careful survey of the past indicates that this style of craft, although conceived and approached by such ancients as DeVinci (who thought of everything) was not a possibility until the lightweight internal combustion engine came into being.

DeVinci conjectured the hull to be similar to that of a late 19th-century bathtub -- a form, by the way, that has haunted designers of amphibians ever since. His model used wagon wheels with a pivoting front axle. It must also be noted that his was the first "unsprung" amphibian, but perhaps this is carrying the credit line too far.

The Norse legends mention a wonderful boat that, to do DeVinci one better, not only swam and rolled on the ground, but also flew. This might indicate the direction of some future research.

The earliest record of an amphibious vehicle in the United States occurs in December 1804, when Oliver Evans, a wheelwright and inventor from Delaware, was given a contract by the Philadelphia Board of Health to construct a steam-powered dredge for dredging the Delaware River docks.

The finished dredge weighed approximately 40,000 pounds, and had an overall length of approximately 30 feet and a beam of 12 feet. For movement on land, the dredge was mounted on wheels and axles, one axle being constructed to receive power from the steam power plant; water propulsion was provided by means of a stern paddle wheel powered from the same source. In July 1805, the "Orkuter Amphibolos" was triumphantly driven up Market Street and into the Schuylkill River, where it floated free and steamed downstream until it reached the Delaware. It is interesting to note that this event took place over two years before Robert Fulton steamed up the Hudson River in his "Clermont". The development itself is of further significance in that it was the first self-powered land vehicle to be built in the United States, and is recognized as the forerunner of the steam-powered automobile.

During the War Between the States, pontoon floats were fitted with wheels to facilitate quick erection of pontoon bridges. If the soldiers of that day had thought to load the pontoons first and then to tow them across the river, they would have to be credited with the first military amphibian; however, such waited until World War II.

In its strictest sense, World War II introduced amphibious warfare. In both the European and the Pacific theaters, the initial problem was one of assault upon unfriendly shores. The development of amored vehicles and tracked assault personnel carriers that could float to the beach and propel themselves through the water was almost a prerequisite to the success of this style of warfare; however, discussion of these interesting craft is beyond the scope of this paper. It was the ubiquitous DUKW that captured the imagination of the world and elicited praise from even such personages as Winston Churchill, who stated that the DUKW was one of the truly outstanding pieces of equipment to come out of the war. It has also been said that the praise was not so much for the vehicle itself, but for the phenomenal work that the DUKW accomplished. And indeed it did.

The World War II wheeled amphibian arose from the necessity of the military to move unprecedented tonnages from ships to storage dumps where no ports existed. Somnolent South Sea Islands which had never faced a larger port problem than discharging a trading schooner or a missionary supply boat now had to accept the tens of thousands of tons of cargo required for a modern army in the field. Islands surrounded by barrier reefs and atolls inaccessible to deep-draft, ocean-going vessels or even to landing craft had to be supplied.

It was immediately apparent that some kind of floating craft was necessary that could receive cargo from a ship lying offshore, proceed across the reefs, and eventually climb out of the water onto land. It should go far enough to discharge its cargo safe from the beach-edge concentrations and the ravages of the sea. Clearly the answer was an amphibian, at home on either land or sea.

In the fall of 1941, a decision was made to convert the versatile "JEEP" into an amphibian by wrapping a hull around the basic chassis and power plant. This craft became affectionately known as the "SEEP". Some 12,000 of these vehicles were built; and while they were technically successful, they proved to be too small to accomplish the logistical mission that appeared to be facing the Army. In April 1942, the need became more desperate, until it culminated in the ordering of a 2-1/2-ton-payload amphibian on 10 April. By 3 June of that year, just 54 days after the order was given, the first of the 2-1/2-ton DUKWS took to the water. This is all the more remarkable in that only 41 days elapsed from the time that the manufacturer was given the go-ahead to the time that the pilot model was on its trials. Responsible for this work were the offices of Sparkman and Stephens, with Roderick Stephens, Jr., in charge of the project; and General Motors Corporation, with Mr. E. W. Allen of the Engineering Department, Mr. E. T. Todd in charge of the design and building of the pilot models, and Mr. William Klein in charge

of production plans.

At the beginning of this job, the need for a decision arose as to whether the craft should be a boat with wheels or a truck that floated. In this particular instance, the decision was not hard to make. The 2-1/2-ton CCWK, a 6 x 6 truck with well-tried design, was the standard Army vehicle. It was decided, therefore, to wrap a hull around these proved components.

The name DUKW resulted from the manufacturer's model description, in which the "D" is for the year 1942, "U" is for utility, "K" is for front wheel drive, and "W" is for six wheels (Reference 1). As one can see, it was purely circumstantial and perhaps fortunate that the code identification resulted in a name so nearly descriptive of the craft. Characteristics of the DUKW and other amphibians are given in the appendix.

That this job was done well is attested to by the immediate and lasting success of this startlingly short but intense effort. Today the remnants of the original DUKWs are still in use and are only now ready to be replaced. However, as time passes, even the best equipment suffers the debilitations of age and the obsolescence due to advancement of science and engineering. So it it with the

World War II DUKW.

At once there arises a multitude of questions as to what a new amphibian should do. How fast should it go? How much cargo should it carry? Should it compete with normal trucks on the highway, or should it be restricted to just over-the-beach operation? Will it be used as an adjunct to a field army pushing inland, where the amphibian must keep up with the column movement? How far offshore will it have to operate? What kind of a sea boat should it be? These and many more questions are asked and must be answered before a design is begun.

LIMITING DIMENSIONS

In the design of wheeled amphibians, there is little freedom in the selection of dimensions for optimum operation. It must be realized that the amphibian is required to travel over roads and highways where cross-sectional dimensions are distinctly restricted. In many cases, the military will require two-way traffic on roads, and this has an effect on width. Loading over the ramp of LST and LCU craft imposes additional restrictions. Here, the designer meets his first frustration and must use great ingenuity in developing an acceptable hull.

The LENGTH of the normal ship is determined largely by hydrodynamic considerations. Presumably the ship designer will keep a low speed-length ratio to reduce the wavemaking resistance. The length of the amphibian, however, is based on the width of the corners of a couple of intersecting streets in a small European village. Length then becomes a function of the street widths and the turning radius of the vehicle. The World War II DUKW had an overall length of 31 feet. The success of this craft has had a strong influence on the design of subsequent models, to the end that the length has not been greatly exceeded on either the SUPERDUCK or the LARC-5, their lengths being 34 feet and 35 feet, respectively. In some amphibians, this

dimension has been exceeded on the premise that the amphibian will be used for only a limited amount of inland operation and will not be required to pass through small villages except by selected routing.

The BEAM of amphibians is also subject to rather arbitrary restrictions. Within the United States, the width of a vehicle for unrestricted highway movement is set at 96 inches. Many states will allow 108 inches. Vehicles with widths greater than those allowable can move only by special permission and special routes. In foreign areas, approximately the same restrictions hold. Some latitude as to beam can be assumed by the designer (by and with the consent of the military) if one-way road movement is assumed.

DRAFT, in itself, is not restricted. This is a freedom that intrigues the designer of amphibians. If the bottom is too close, the craft rolls on its wheels; this is, indeed, the very reason for the existence of the amphibian craft. It must be remembered, however, that the craft must have land stability as well as water stability, so the height of the center of gravity from the bottom of the tires is limited by the allowable side-slope angle.

Since the craft will find its life's work in sand (as well as in

water and on roads), the characteristics of sand have to be explored. It has been determined that the angle of repose of sand, that is, the natural slope of the sand-dune face, will be about 60 percent -- 60 feet of rise in 100 feet of travel. Our craft, then, must be capable of climbing this slope. It is patent that such a slope represents the angle of internal friction for sand; therefore, no vehicle could climb such a slope, since it could produce no shear component between the wheels and the sand. In fact, the vehicle can climb a slope approaching the limit, since the wheels dig out the sand and alter the angle of the face so that, in reality, the wheels are operating at a lesser slope with respect to the sand while the vehicle is bodily climbing the greater angle. Such a side slope causes trouble for the vehicle traveling along its length or parallel to the face of the slope. The vehicle slides and the down-side wheels dig in so that the vehicle tends to overturn. For this reason, one of the important design characteristics is the side-slope angle. This has been set at 30 degrees and represents the slope equivalent to just under a 60-percent slope.

Amphibians have to climb over banks and bermes, so obviously they cannot have a long overhang forward unless the angle from the ground at the front tire to the forward projection is more than the equivalent angle of the approaching obstacle. This is termed the

ANGLE OF APPROACH. In the World War II DUKW, the angle of approach was set at 38 degrees. In the DUKW, the bottom clearance was 18 inches. The LARC-5, with a bottom clearance of 24 inches, has been given an angle of approach of 25 degrees, which gives it about the same obstacle ability of the older craft.

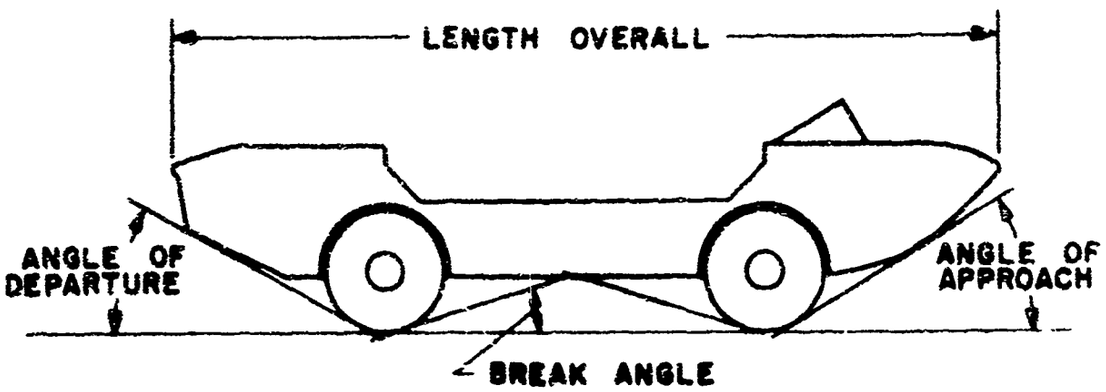

In like manner, the amphibian must be able to cross a similar obstacle going as well as coming, so that it must be arranged with a suitable angle of departure. This angle has been set at 25 degrees. The angle of departure is significant, especially when the vehicle is departing from an LST. When the amphibian with its load travels forward, the LST trims somewhat by the bow. As the amphibian is leaving the ramp, it is becoming water-borne and is rotating bow up with the stern moving downward. At the same time, the LST, relieved of its

load, begins to raise her bow. The result is a sharp poke in the stern for the amphibian if the speed of the amphibian and its angle of departure are not sufficient to clear the LST.

One more clearance angle is of importance, and this is coupled with the clearance dimension. It has been found that the amphibian should have a vertical hull clearance of about 18 inches from the bottom of the wheels to the hull. More clearance is necessary if the wheels have a spring suspension system, where bounce takes up part of the clearance. In the case of the LARC-5, the bottom clearance was set at 24 inches. Of perhaps more importance is the angle from horizontal to a point midway between the wheels. This is termed the BREAK ANGLE. On both the DUKW and the LARC, the break angle was set at 15 degrees, which seems about right.

HEIGHT must also be considered by the designer of amphibians. The vertical clearance allowed by the highways of the United States is 13 feet 6 inches. The same dimension is allowed on foreign highways. Needless to say, there are other height restrictions for secondary roads and byways; however, for the small amphibian, other design dictates will keep the height within reason, so that these restrictions present no great problem. In the larger vehicles, a distinct problem does exist, and heights must be forced to conform. Of interest,

however, is the fact that maximum height can be exceeded by a small amount, and the advantage of letting a little air out of the tires for the needed clearance can be taken, a sort of "don't raise the bridge; lower the river" concept.

TURNING RADIUS, as previously mentioned, is a function of road width and of vehicle length. The geometry of steering must also be considered. In conventional AKERMANN STEERING, which is the steering common to automobiles, the swept-out radius of turn is defined as follows:

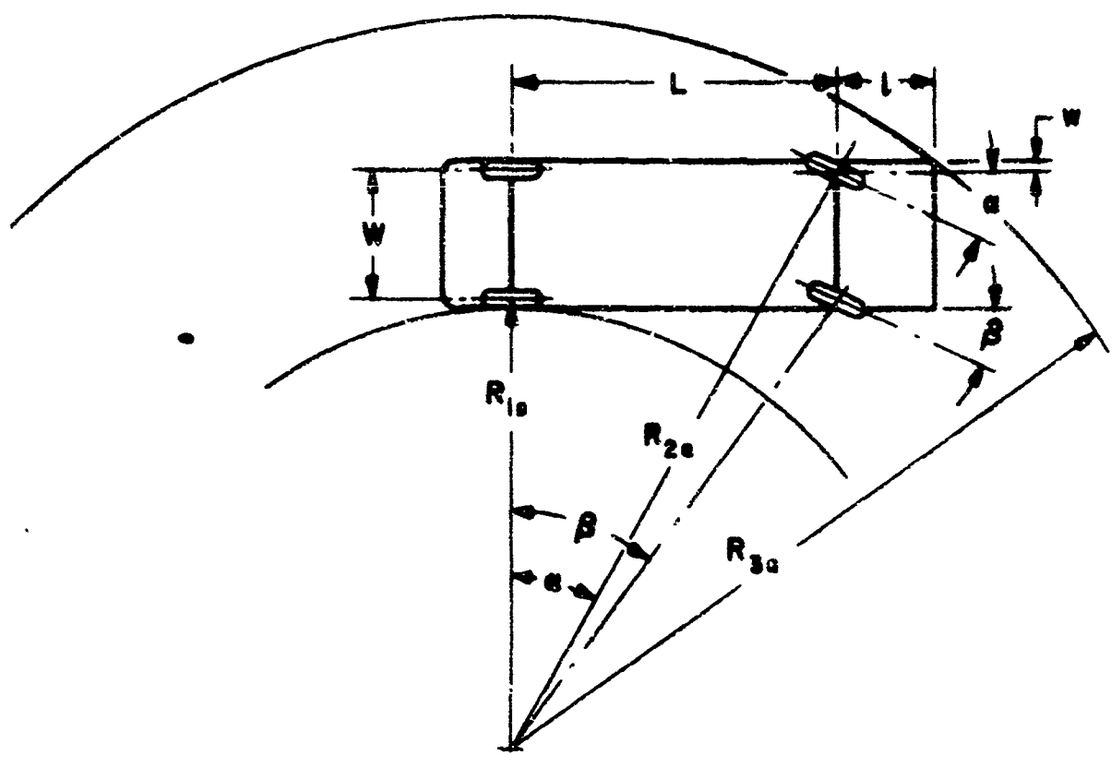

$$R_{1a} = L \csc \alpha - W$$

$$R_{3a} = (R_1 + W) \cos \alpha + (L + Z) \sin \alpha + w \cos \alpha$$

Where four-wheel steering is contemplated, the following is the relationship between the wheel steering angles and the extreme radius:

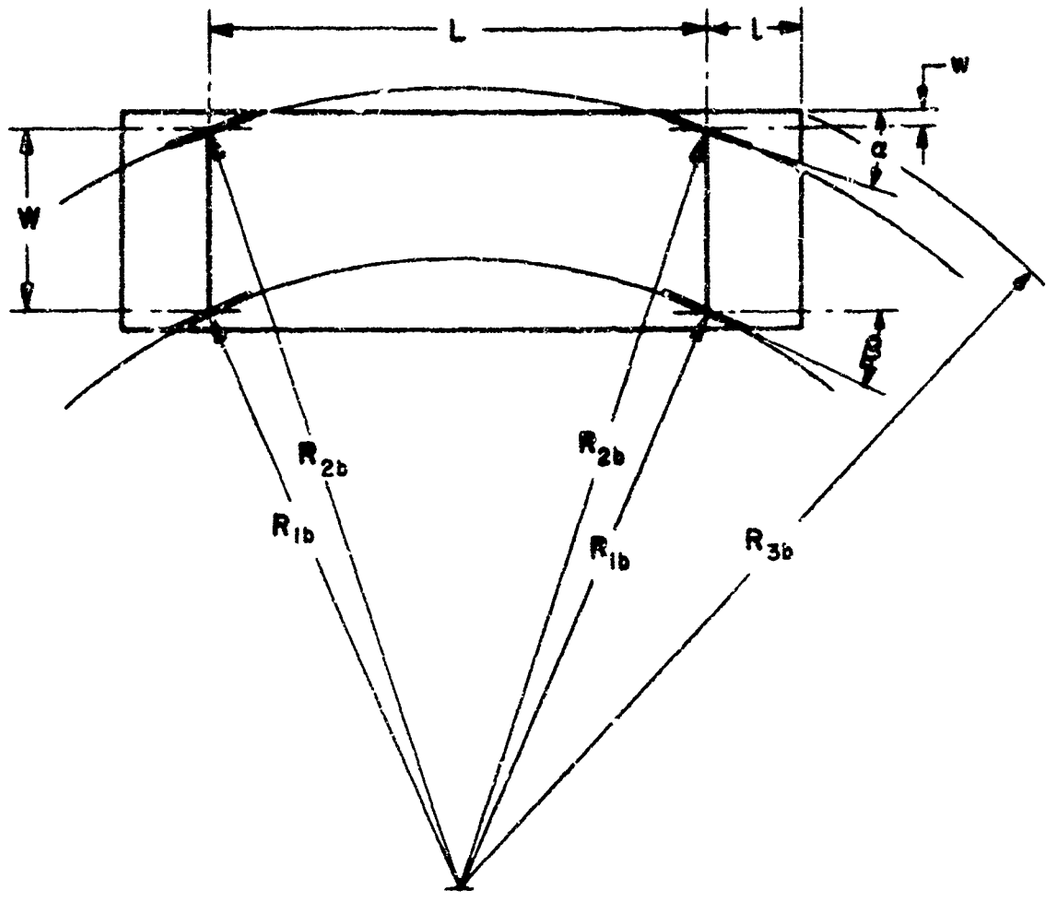

$$R_{1b} = \frac{L}{2} \csc \beta$$

$$R_{2b} = R_1 + W \cos \alpha$$

$$R_{3b} = \frac{L}{2} \csc \beta + (W + w) \cos \alpha + l \sin \alpha \, .$$

For equivalent steering angle, the difference is

$$R_{3a} - R_{3b} = (L \csc \beta + W) \cos \alpha + (L + l) \sin \alpha + w \cos \alpha - \frac{L}{2} \csc \beta + (W + w) \cos \alpha + l \sin \alpha$$

$$R_{3a} - R_{3b} = \left(\cos \alpha - \frac{l}{2}\right) L \csc \beta + L \sin \alpha \, .$$

The foregoing, of course, assumes equal steering angles α and β as well as equal dimensions between the two vehicles. It should be mentioned that the steering angle is of importance, since this determines the amount that the hull has to be cut away for the wheel wells. Resistance is certainly affected by the depth of these cutouts; but, more importantly, the strength of the hull is adversely affected by the depth of cut. The deeper cut also allows more air to be drawn in through this area; this air is picked up by the water flowing under the hull and is sucked into the propeller, an action that affects both the propulsive efficiency and the vibration of the propeller.

Sea-lift limitations also impinge upon the designer's freedom. Amphibians have to be carried overseas on larger ships. Therefore, their weight must be within the combined capacity of the ship's cargo booms so that delivery of the amphibian will not constitute a problem. In most cases, ships' booms have a capacity of 10 tons. If this weight is exceeded, then only jumbo booms can be used and the loading of the amphibians is restricted to one or two holds only. It is generally accepted that the weight of the craft in shipping condition should not exceed 20,000 pounds if full utilization of ships is expected.

Amphibians are carried aboard LSDs and other such specialized ships, where no particular problem is imposed. If the amphibian is to be carried in davits, the bosom clearance of the davit must be considered as well as the distance between the arms. Localized strength must be worked into the hull of the amphibian to accept the concentrated load imposed by the davits.

HULL CHARACTERISTICS

The wheeled amphibian is certainly not a ship, nor is it a normal road vehicle. One is forced to conclude that it is strictly an amphibian, which requires that each characteristic be analyzed and selected on the basis of its contribution to the total design.

Water speed must be such as to allow efficient cargo movement between ship and shore. In addition, water speed has certain inherent desirable characteristics of its own. The craft must face adverse tides, currents, and wind. The higher speed craft will be less affected by these adverse circumstances than the lower speed craft. Of even more interest is the fact that the craft must have sufficient speed to keep ahead of the surf. This last characteristic indicates that for surf of, say, 10 feet in height at the breakers, a speed of about 12 to 14 knots will be required. As the vehicle can "surfboard" to a great extent, a speed of about 10 to 11 knots is all that is required for the vehicle to stay ahead of the crest of the surf under most conditions. In heavy surf, a craft traveling at a speed of about 6 to 7 knots will be overtaken and pooped occasionally. In avoiding surf damage, a great deal depends upon the skill of the driver. A good operator waits outside the surf line until the wave is just right, that is, until just after a crest passes under his craft,

and then matches his speed to the speed of the surf and rides the face of the succeeding wave in to shore.

There is always danger of the vehicle's broaching in the surf. The skilled operator will keep his craft perpendicular to the surf line at all times. Unlike ocean waves of similar height, the surf wave is nearly a wave of translation, with the wall of water moving toward the beaches. The trough of the surf is receding at high velocities in what is commonly termed an undertow. If the stern of the craft is near the crest and being forced shoreward while the bow is buried in the trough and being forced seaward, a strong broaching couple exists if the craft diverts even a little from perpendicular. This tendency is bad enough in a seagoing vessel or in a surfboat; but, to make matters worse, the wheels of the amphibian present a larger lateral area, and thus the broaching forces are larger and harder to overcome. For this reason, the steering of the amphibian is of great concern. Not only must the steering be forceful, but the rudders should be so geared that large angles can be steered in short time intervals. The steering wheel ratio that is about proper for land steering, that is, 1-1/2 to 2 turns hard over to hard over, is also about right for water steering of the rudder. In view of the fact that the craft may be approaching the beach at somewhat of an angle, the front wheels of

the craft should also be angled with the rudder and engaged at least for a time before the craft hits the beach. If the wheels are not angled to bring the craft perpendicular to the waves at the moment of beaching, waves will broach the craft in the sand and will almost invariably overturn the craft if the surf is running high.

The rather steep angle of the face of the surf dictates the fullness of the bow and stern of the craft. There must be large reserves of buoyancy in these sections to lift the craft out, rather than to allow it to root in and trip. This observation is somewhat at variance with the accepted notion of what a surfboat should look like. But it must be remembered that the surfboat is slender and fine fore and aft, since it is a pulling boat; and the impact of the sea on a broad, full surface would completely stop a craft of no more power than can be afforded by oars. It is a matter of record that the DUKWs have lived through surf conditions far in excess of those in which a Monomoy surfboat can live.

The exceptionally high weight per foot of waterline length of the loaded amphibian places it in a class of craft that, if it were, say, a tug, would require very fine prismatic and block coefficients. The displacement-length ratio of the World War II DUKW loaded is

477, while that of the LARC is 371. This high displacement-length ratio range coupled with a limited draft indicates that little can be done with the lines of such a craft to facilitate its passage through the water. While this is true, much can be done to make the hull satisfactory for the many other conditions the craft has to meet. In meeting breaking surf bow on, the shape of the bow sections either can throw the water back over the craft or can throw the water to the side. The designers of the original DUKW very logically chose the most simple hull geometry on the basis of both acceptable performance and ease of manufacture. This led to a scow bow. In subsequent years, other amphibians were built, including one, the Gull, with a fully mounded bow. See Figure 1. The LARC has a modified bow, still of developable surfaces, but with enough of an entrance angle to throw the water to one side. It must not be assumed that this is sufficient to hold the head up under every surf condition nor that the inclusion of an angle of entrance to the bow keeps the decks dry at all times. This is just not so. When an amphibian meets oncoming surf, a veritable deluge encompasses the craft. Here is a problem of dynamic response of the vessel to the sea, actual freeboard height forward, as well as of bow shape. Reluctantly, we are forced to conclude that there are surf conditions that will throw considerable amounts of water over the bow of any small amphibian regardless of the bow configuration.

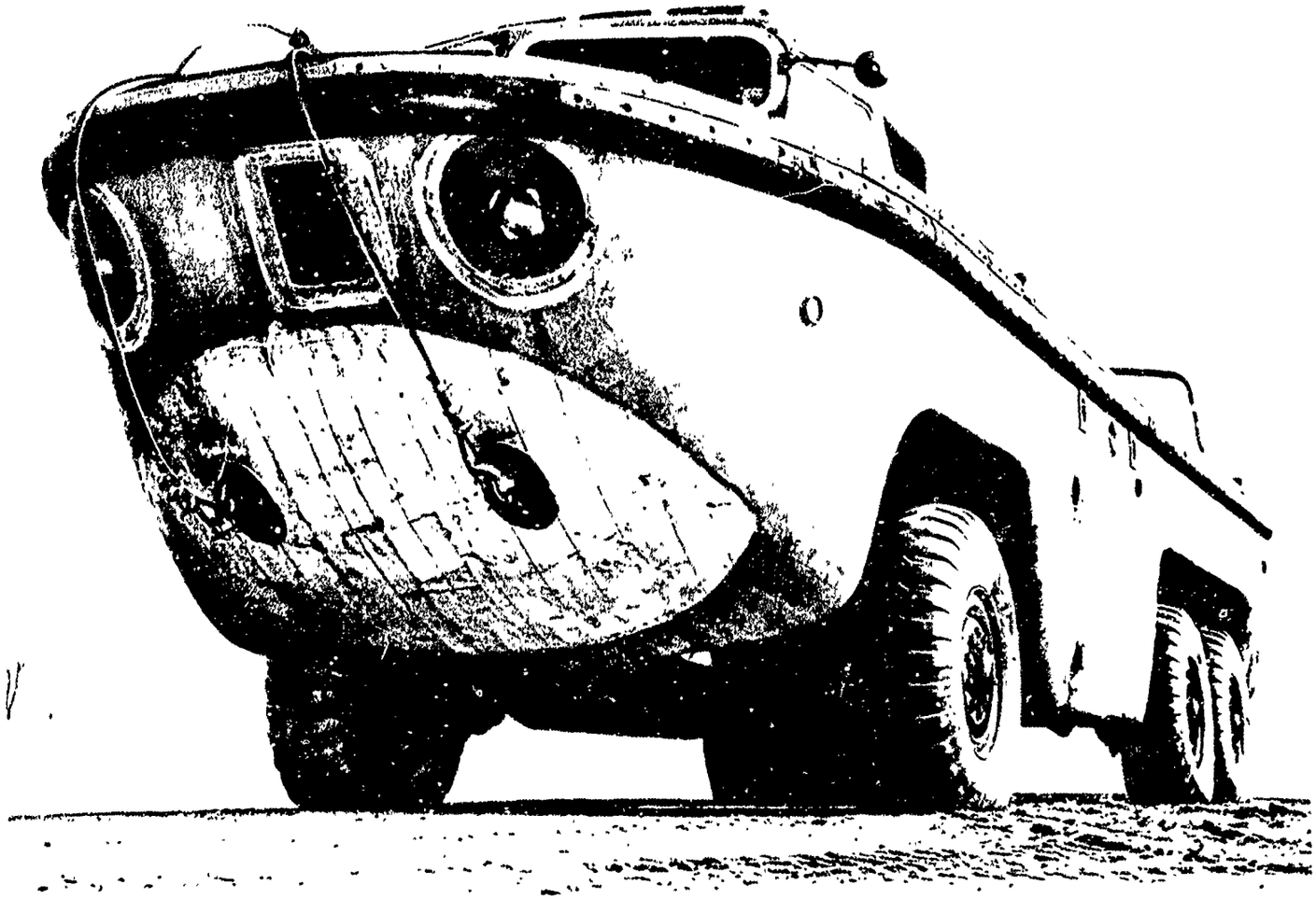

Figure 1. The Gull.

Freeboard is important from two standpoints. The range of stability is a function of the freeboard. It is believed that a well-designed amphibian should have positive righting arm through perhaps 50 to 60 degrees. The World War II DUKW had positive stability to about 23 degrees and the SUPERDUCK, to about 25 degrees. Both of these craft were successful, but it must also be remembered that there will be dynamic conditions that will require more range. Such dynamic conditions do exist in surf. Should severe broaching occur, only a great range of stability will allow the time to correct the broach.

Freeboard at the bow and the stern acts as a stability range extender and approaches the scheme of the self-righting lifeboat, which, when the bow and stern were finally emersed, effected a sharp lateral shift in the center of buoyancy, which indeed gave it the self-righting feature. In the LARC, this is carried out in an admitted take-off of the lifeboat design.

Protection of cargo is important, but it is hardly possible to protect cargo from water in any craft that is crossing the surf line. Therefore, all cargo designed for discharge by amphibian must be waterproofed. For this reason, less attention is paid to this aspect of design than would be for a normal vessel. In Figures 2 and 3 there are illustrated a SUPERDUCK with the cargo carried in a well and a LARC-5 with the cargo carried on a flush deck going through the same surf on the same

Figure 2. The LARC-5.

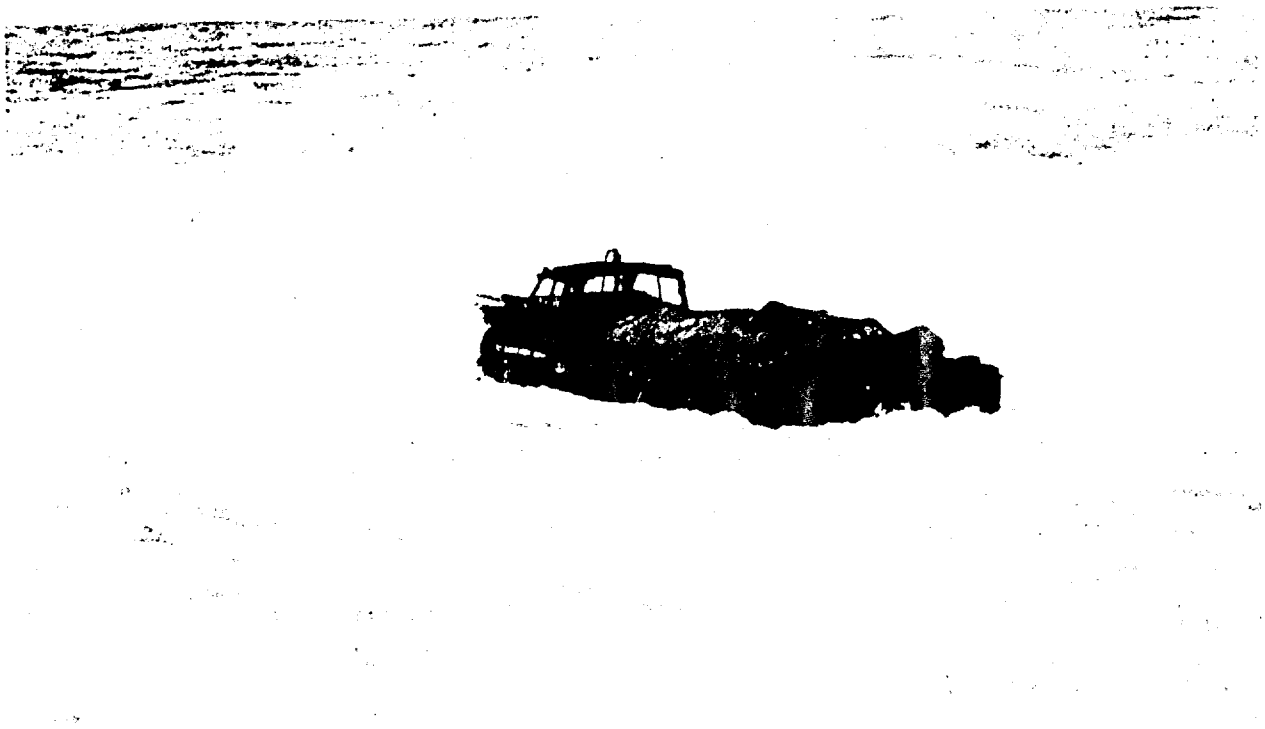

Figure 3. The SUPERDUCK.

day. It must be admitted that the cargo in either event is subjected to a great deal of water.

The flush deck of the LARC-5 was chosen, despite its high center of gravity, to gain the self-bailing feature. This feature has given the LARC-5 a substantial range of stability plus the safety of having dry bilges.

In the case of the BARC, the cargo is carried in a well; however, the cargo deck is designed to be above the waterline in all conditions of loading. In addition, the cargo well is fitted with two bilge pumps, each of 1,500-gpm capacity. The high freeboard of the BARC allows a substantial range of stability of 40 degrees with no cargo to 29-1/2 degrees with 60 tons of cargo. It is well that this is so. On the first surfing tests of this amphibian, she dived through a wave estimated to be 20 feet from trough to crest. The cargo compartment was filled to the gunnels. The bilge pumps dried out the well in short order, and the vessel returned to shore damp but undamaged except for the windshield. The windshield, which was built of 3/4-inch plate and was 24 inches long and 18 inches high, was broken in by the force of the surf. Windshields, incidentally, take a rather heavy beating. The windshields of the DUKW are 11-1/2 inches high and 24 inches long. They are built of 3/4-inch safety glass. The windshields of the LARC-5 are 18 inches by 24 inches and were

originally 1/2-inch thick. These windshields and frames were designed to take a uniform load of 1450 pounds per square foot. They broke out by wave impact the first time they were surf-tested. The replacement windshields are made of 3/4-inch-thick safety glass and have not as yet broken. In all the foregoing cases, the frames have been designed to take the designed load of the glass without allowing excessive deflections of the glass panel.

The decks of the amphibian are subjected to rather heavy loads. These are composed of both static and dynamic loads. Statically, the deck is subjected to maximum loading of a uniform nature of about 210 pounds per square foot, which represents the uniform weight of a CONEX container at full load, that is, 10,000 pounds gross. As a concentrated load, a fieldpiece probably represents the maximum loading. The 155-mm gun gives a deck loading of about 6,000 pounds on an area of about 100 square inches. Usually the deck is designed so that a girder system takes the concentrated loads rather than the decking itself. In addition to the static loads, the decking must also take the impact loads of the cargo as it is burtoned from the ship. Here, the ship is rolling and the amphibian is heaving on the waves. The cargo is descending. The worst combination is for the ship to be rolling toward the amphibian and the draft to be descending while the amphibian is

rising on the wave. Such velocities easily lead to impacts up to 50 percent greater than the static loads. They can easily reach higher figures, but cargo discharge is usually suspended by this time to save the equipment.

The decking of the World War II DUKW and the SUPERDUCK was of open steel grating similar to subway gratings. The theory here was that the wave, if taken aboard, would immediately drain to the lowest part of the bilge, where it could be pumped out. In the BARC and LARC, the deck is solid, with the scuppers arranged to drain the water overside in the case of the LARC and with side drains to sumps of bilge pumps in the case of the BARC.

The underwater portion of the amphibian is by far the most interesting to the vaval architect. Here, one will find nothing like the form one expects in a ship or any other marine craft. The large tires and wheels that protrude produce turbulence that would be unacceptable in any strictly marine craft. Many studies have been directed toward retracting these wheels, but so far none have proposed a completely satisfactory solution. The flow around these appendages has a remarkable effect on the performance of the amphibian. Not only is the flow around the tire one of almost pure turbulence, but a great deal of air is caught up by

the tire and carried down into the propeller and rudder area, an action which causes vibration and results in inefficiency. It is apparent that the deeper the wheel pockets and more discontinuous the hull in this area, the greater will be this effect. On all amphibians, attempts have been made to strip off the air in the top of the wheel well. The Gull was fitted with side fender skirts, but these did not seem to remedy the situation. On this craft, another experiment was also conducted: air was deliberately injected into the wheel pockets to increase the buoyancy and to prevent the turbulence excited by the well by depressing the water level to about the bottom of the craft. In neither case was the improvement measurable. In the LARC-5, the top of the wheel well is out of the water. It was noticed in tests conducted in the David Taylor Circulating Model Basin that the air was drawn down from the surface in a narrow belt until it cleared the hull line and then traveled aft through the propeller disc. Attempts to stop this movement were unsuccessful.

The question of why the wheels are not driven during the period in the water is often asked. Tests of the LARC-5 and the BARC indicated that the power required to drive the wheels was more productively employed in driving the propeller. In fact, a substantial reduction of speed was experienced when the wheels were driven.

The configuration of the bottom of the amphibian is subject to some discussion. How clean the bottom of the craft can be made is a function of the suspension system employed. If full-spring suspension is used, there is little one can do to clean up the bottom. In the design of the World War II DUKW, the decision to build a flotation hull around a 6 x 6 truck resulted in the suspension system's being hung outside the hull. The truck chassis was retained and furnished the main strength member, while the hull just kept out the water. The springs, axles, differentials, and other gear were all located under the hull. This, very interestingly, gave the craft two drafts, one on land with the springs compressed and a quite different and increased draft when the wheels hung down in the water. Since the tires of the DUKW were of fairly high pressure compared to the low-pressure tires now used, the underwater gear acted as ballast and contributed in a marked way to lowering the center of gravity when the craft was afloat.

In the design of the LARC-5 and LARC-15, a leaf was taken from their predecessor, the BARC, and they were fitted with a fixed suspension system. The details of the suspension system will be covered later; however, the results hydrodynamically were that a much cleaner hull became possible. Only the bevel gearbox and the axle housing protrude from the hull fair line.

SPEED CONSIDERATIONS

A rather limited analysis of the available data on power versus speed of amphibians indicates that the effective horsepower (EHP) can fairly well be described by the following empirical equation:

$$EHP = (1.267\, W_t \times 10^{-6} + 0.062)\, V^{3.2} \qquad (1)$$

where

W_t = total weight of craft and cargo

V = velocity in knots.

Dimensionally, this is not an equation and has no rational meaning. Somehow or other, a dimensional analysis of this problem left me with no consistent expression. It was derived by recognizing that the slope of the EHP-versus-speed curve varies nearly as the velocity to the 3.2 for all hulls under consideration. The coefficient obviously depended on weight and was plotted against the weight. For all data, this plotting was substantially linear, therefore, the coefficient is expressed as a function of weight. The conclusion, therefore, is that the power required by any form of this character is largely dependent upon the speed and weight and that minor changes in hull form (perhaps rather large changes in form as well) have little effect upon smooth-water power requirements.

Lest too much be drawn from this little analysis, I would like to point out that, in every case, the displacement-length ratio was quite high and that the speeds are restricted to below-planing velocities. It

is interesting to note that the cargo requirements of amphibians almost predispose the hulls to shoebox forms and that the slight chamfering of the corners that is allowed the designer does not make drastic changes in the primary hull coefficients. In every case, the wheels are eddy makers, as is the transom. It is noted that in the split between frictional and wavemaking resistance, the frictional resistance is a poor second, so much so that it is believed unnecessarily elegant to separate the two in expanding model results to full scale. Most designers and model basins merely expand the model results by the cube of the scale relationship and let it go at that. The agreement between model basin results expanded in this manner and the full scale results seems to justify this procedure.

Optimization of Speed and Horsepower

The principal duty of an amphibian is to carry cargo from ship to beach, so it is desired to proportion cargo capability and speed to produce the maximum cargo delivered. Todd (Reference 8) suggested that, if a given amphibian were allocated X number of pounds that could be apportioned between cargo, machinery, and fuel and if power were reduced to zero, the amphibian could carry the maximum cargo but at zero ton-miles per hour. If, on the other hand, the weight allowance were consumed by machinery and fuel alone, then the speed would be a maximum; but, again, we would have zero ton-miles per hour of cargo

carried. Somewhere in between these two must lie a maximum. The expression for EHP previously given allows the maximization of these factors. Some assumptions must be made for the purposes of this illustration; but, for any particular hull form, such an analysis can be made rather precise and actual power variations used rather than the tentative expression given here.

The ton-miles per hour of cargo transported is considered only for the sea portion of the trip, although the analysis could be expanded to include the land portion as well by suitable modification of the equation.

$$Y = (W_g - W_{fi} - W_m) V \qquad (2)$$

where

Y = pound-miles per hour for cycle
W_g = weight allowed for engines, machinery, fuel, and cargo
W_{fi} = weight of fuel used in bringing the cargo from the ship to the beach
W_m = weight of engines, machinery, and auxiliaries.

$W_{fi} = \frac{D}{V_i}$ SHP 0.55 that is, the weight of fuel used in coming in from the ship is the horsepower-hours times the specific fuel consumption.

$W_e = 7.0$ SHP that is, the total machinery weights for a gasoline-powered amphibian run about 7 pounds per shaft horsepower.

$V_o = V_{in} \left(\frac{\text{Total displacement while going in}}{\text{Total displacement while going out}} \right)$ 0.312 based upon the speed, power, and weight relationship of equation 1.

The equation then becomes:

$$Y = \left[C_{dw} W_{ti} - C_{sfc} \left(\frac{D\,(SHP)}{V}\right) - 7.0\,(SHP)\right] V \qquad (3)$$

where

C_{dw}	= dead-weight coefficient, which includes machinery for the LARC-5 (0.6) and for the BARC (0.47)
D	= distance from ship to shore in nautical miles
W_t	= weight for amphibian with full cargo, fuel, and machinery
C_{sfc}	= specific fuel consumption in pounds per horsepower per hour, ≈ 0.55
W_{ti}	= weight, total for amphibian on its way in from the ship, that is, with full cargo but less fuel necessary to go out
V	= velocity in knots for the designed condition, that is, the trip from ship to shore with full cargo.

In the case of the LARC-5, the propulsive coefficient was 0.43 (approximately). In the case of the BARC, which is a great deal larger and without Kort nozzles, the propulsive coefficient is 0.42 to 0.44 through the range from low to top speed.

Rewriting equation 3 in terms of velocity in knots by using equation 1,

$$V = \left(\frac{EHP}{1.267 \times 10^{-6} W_t + 0.062}\right)^{0.312},$$

we get

$$Y = 0.6 W_t V - 0.55 \frac{D}{V} \left[\frac{(1.267 \times 10^{-6} W_{ti} + 0.062) V^{3.2}}{0.43}\right] - 7.0 \left[\frac{(1.267 \times 10^{-6} W_{ti} + 0.062)^{4.2}}{0.43}\right].$$

Substituting values for the LARC-5 of

W_{ti} = 28,500 pounds

D = 10 nautical miles

$$Y = 17,100V - 0.55\frac{10}{V}\left[\frac{(1.267 \times 10^{-6} \times 28,500 + 0.062)V^{3.2}}{0.43}\right] - 7.0\left[\frac{(1.267 \times 10^{-6} \times 28,500 + 0.062)V^{4.2}}{0.43}\right]$$

$$Y = 17,100V - 0.228V^{3.2} - 1.595V^{4.2} .$$

Taking the first derivative and setting it equal to zero, we can solve for the maximum pound-miles per hour in terms of velocity:

$$\frac{dy}{dv} = 0 = 17,100 - 0.73V^{2.2} - 6.8V^{3.2} ,$$

or $V = 11.4$ and the shaft horsepower required would be 548.

Examining this condition for the following sea distances, we find:

Sea Distance	Optimum Velocity	Shaft Horsepower	Ton-Mile Per Hour
2	11.6	580	86.2
3	11.55	578	87.2
5	11.5	572	87.6
10	11.4	548	83.7
15	11.3	540	82.3

The opinion is often expressed that the further the distance the amphibian has to travel, the more important becomes the speed. This is not apparent from the basis of optimum speed calculations, where the shorter distance finds the higher speed more effective. It will also be noticed that the ton-miles per hour crests at about 5 miles from shore. All that the foregoing implies is that this is optimum for the given

hull configuration chosen for this analysis. The operational aspects of the job of lightering cargo make it apparent that the shorter the distance the cargo has to be carried, the more efficient the operation.

Eddy-Making Resistance

For the wheeled amphibian of "normal form", eddy making must account for a large portion of the total resistance. The wheels and tires develop their individual eddies, while additional eddies are formed by the axles, housings, steering linkages, struts, shafts, propellers, keel coolers, rudders, and various other appendages that can be, and usually are, hung on the bottom of the craft. By far the most significant seems to be the wheels and the stern, or what would be the transom of a boat. It will be noticed in Figures 4 and 5, showing the LARC-5 in the circulating model basin, that the rather severe eddies are found aft the wheels and in the transom area. Freeing the wheels of eddies is almost impossible unless the wheels are retracted or raised above the waterline. Some attempts to free the stern of eddies were made on the LARC-5 by fitting discontinuities to the hull at the point where the bottom shell plating meets the departure angle of the transom. It was hoped that complete separation could be effected, but this was not the case.

An interesting aspect of the appendages, however, is the wave pattern set up by the wheels and its combination with the natural wave

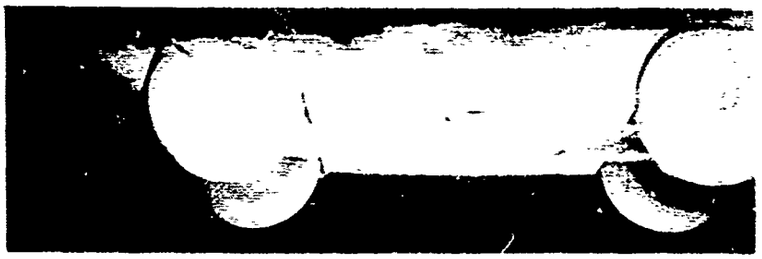

PSD 93927

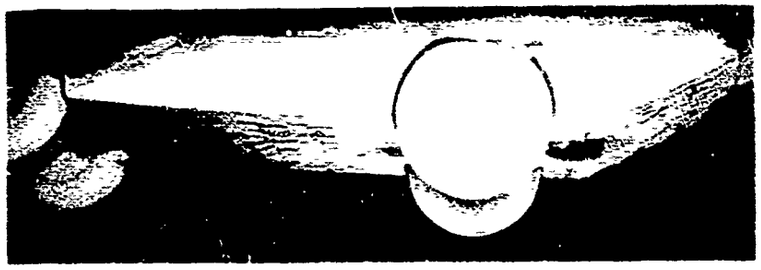

PSD 93924

PSD 93934

LARC-5
CIRCULATING WATER CHANNEL PHOTOGRAPHS
SPEED 7.0 MPH 646 RPM
TRIM 0.79 FT. X STERN

Figure 4

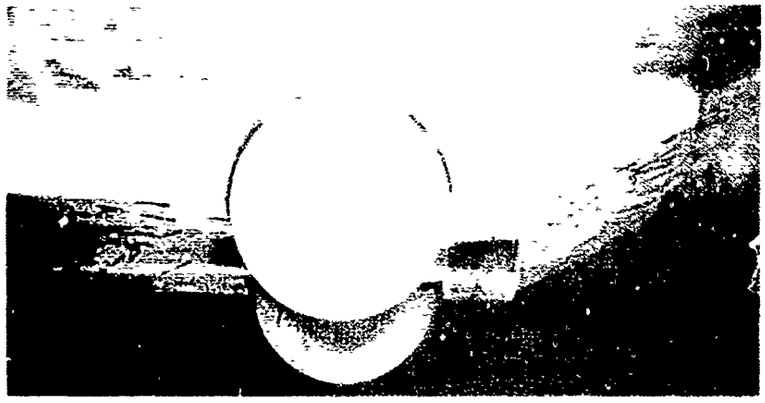

PSD 93930

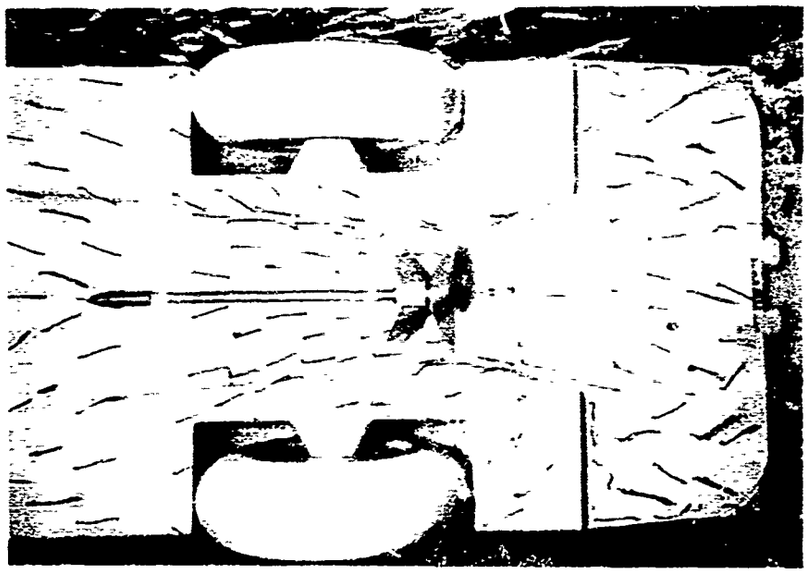

PSD 93940

LARC-5
CIRCULATING WATER CHANNEL PHOTOGRAPHS
SEPARATION WEDGES IN PLACE
SPEED 7.0 MPH 646 RPM
TRIM 0.79 FT. X STERN

Figure 5

form of the total body. The wave patterns combine to crest at a position about 70 percent of the length of the craft. For velocities of the amphibian of, say, 9 miles per hour, the characteristic wave length should be about 34 feet, given by the trochoidal wave theory (Reference 23).

In Figure 6, with the amphibian at 9 miles per hour, the crest of the wave against the hull begins about 25 feet from the bow and continues in a truncated crest clear past the stern. It is believed that the effect of driving the two front wheels through the water results in a greatly accelerated flow between, and adjacent to, the wheels; therefore, the pressure in this area is lowered and a trough in way of, and just aft, the front wheels is caused. The immediate retransformation of velocity to pressure results in an over-critical wave similar to a hydraulic jump occurring in the vicinity of 25 feet from the bow. This phenomenon added to the natural wave crest occurring 34 feet from the bow leads to an extended area of turbulent water. In the case of the LARC, this is of particular disadvantage in that the low point of the deck is just forward of the 25-foot point. Any migration of the start of the wave crest tends to wet the deck. The answer to this is obviously to make the craft longer, wider, use smaller tires, go faster, or other equally unacceptable solutions. This seems to be just something that must be accepted until a feasible method of wheel retraction has been worked out.

The Effect of Waves on Speed

Speed loss due to wave action is to be expected and is different only in degree between the amphibian and the vessel of similar dimensions.

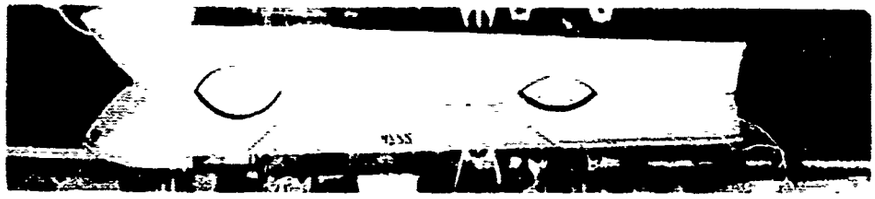

SPEED 0.0 MPH

SPEED 7.6 MPH

SPEED 8.0 MPH

SPEED 9.0 MPH

LARC-5
WAVE PROFILE PHOTOGRAPHS

Figure 6

Tests carried out at the David Taylor Model Basin on the LARC-5 and LARC-15 indicated that rather large losses would be experienced when wave action gave rise to severe pitching. The most severe condition occurred in both models when the wave was twice the load waterline length. It was surprising that, in both models, the waves that were twice as long as the hull or longer cost more in speed than did the waves of about the hull length. This is accounted for by the fact that, taking the attitude of the wave slope, the amphibian tended to root its bow under in these waves.

As nearly as possible, the radius of gyration of the model was the scale of the radius of gyration of the full-size vehicle. Since it was impossible to make the model directly analogous because of its construction, the results given in Figures 7, 7a and 7b are not exact. A somewhat shorter wave length would produce the results that are reflected in these curves.

In the case of the LARC-5, the results of these tests indicate speed losses, when these losses are compared to still-water speed for 225 horsepower available at the propeller, of 2 percent for the 1.2-length wave, 16 percent for the 2.0-length wave, and 7 percent for the 4.0-length wave. This would indicate that the critical wave length for this amphibian is near a 2.0 length. It was at this length only that solid water came over the bow.

In the case of the LARC-15, the results based on still-water speeds for 450 horsepower at the propeller are about 6 percent loss in speed for the 1.2-length wave, 16 percent for the 2.0-length wave,

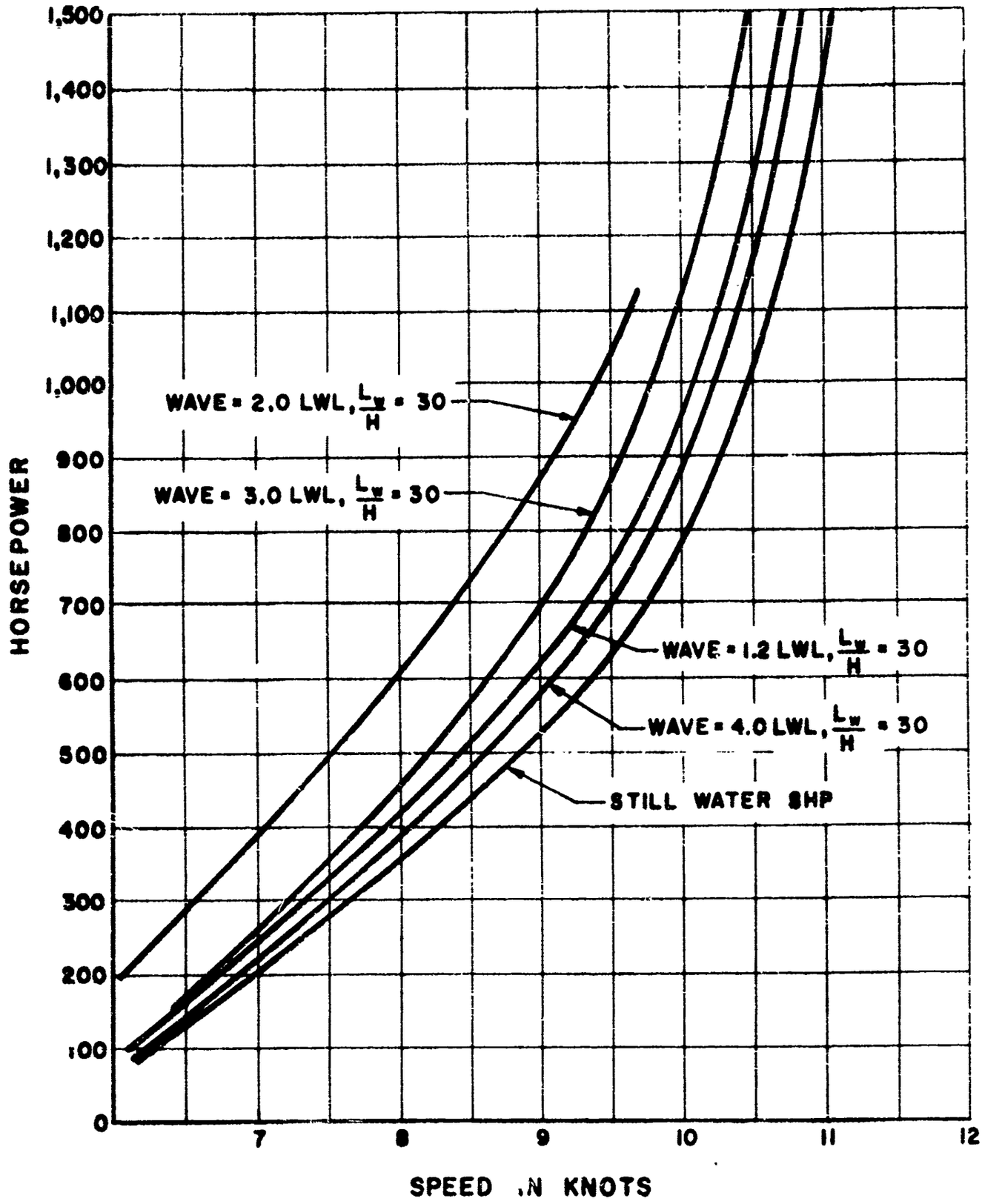

Figure 7. Fifteen-Ton Amphibious Lighter (LARC-5). Shaft horsepower for waves of various lengths.

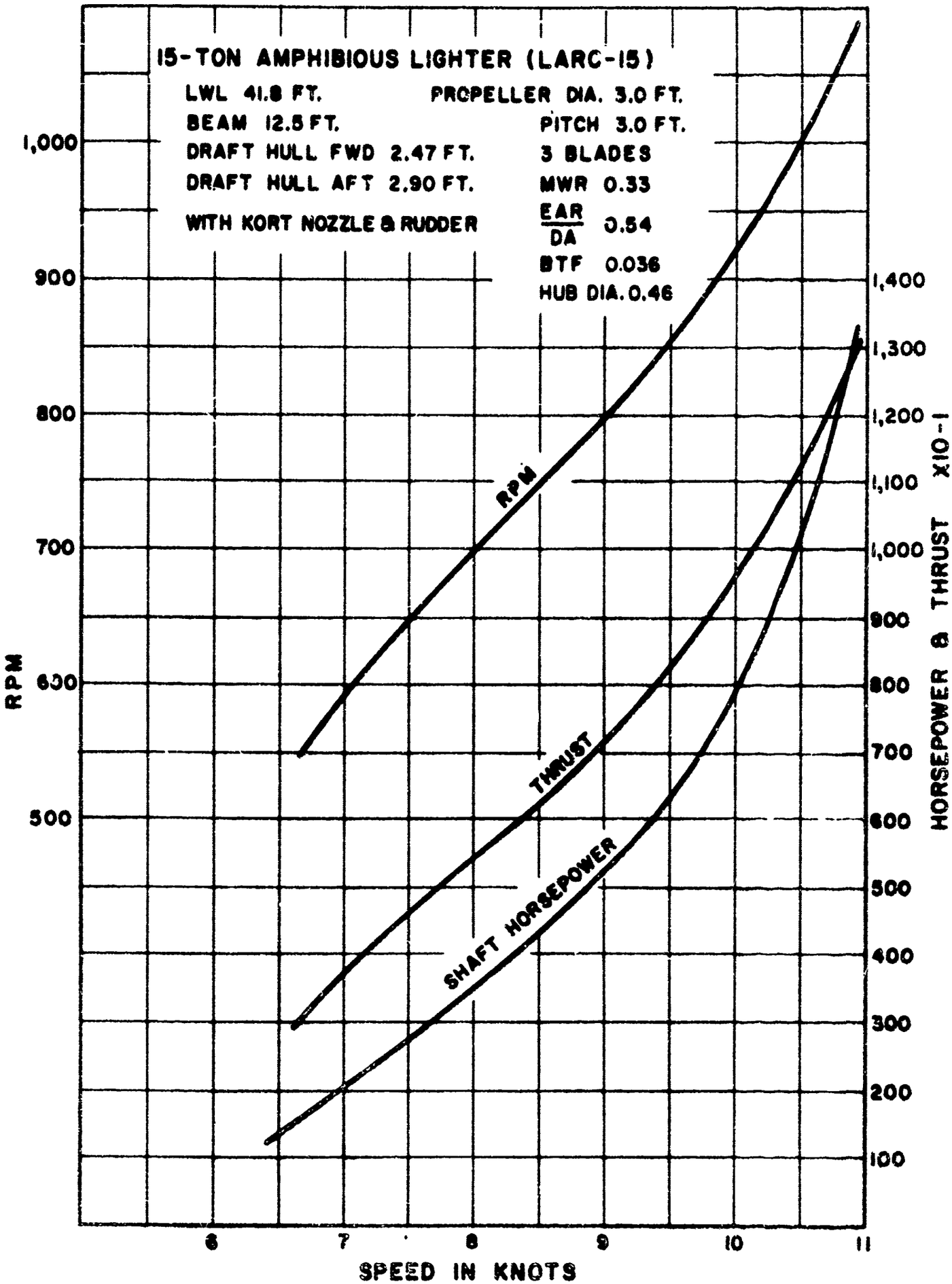

Figure 7a. Speed Versus Power (LARC-15).

CHARACTERISTIC CURVES
OF
PROPELLER 3760

REYNOLDS NUMBER, $R_e = b_{0.7}\frac{\sqrt{V_A^2+(0.7\pi nD)^2}}{\nu}$

THRUST COEFFICIENT, $K_t = \frac{T}{\rho n^2 D^4}$

TORQUE COEFFICIENT $K_q = \frac{Q}{\rho n^2 D^5}$

SPEED COEFFICIENT, $J = \frac{V_A}{nD}$

EFFICIENCY, $\eta = \frac{TV_A}{2\pi nQ} = \frac{K_t}{K_q} \times \frac{J}{2\pi}$

T = THRUST
Q = TORQUE
n = REVOLUTIONS PER UNIT TIME
V_A = SPEED OF ADVANCE
$b_{0.7}$ = SECTION LENGTH AT 0.7 RADIUS
D = DIAMETER
P = PITCH
ν = KINEMATIC VISCOSITY
ρ = DENSITY OF WATER

NUMBER OF BLADES..... 3
EXP. AREA RATIO..... 0.537
MWR..... 0.332
BTF..... 0.036
P/D (AT 0.7R)..... 1.000
DIAMETER..... 9.000 ins.
PITCH (AT 0.7R)..... 9.000 ins.
ROTATION..... R.H.
TEST n..... 18.60 rps
TEST V_A..... 3.0 to 12.[illegible] fps

TESTED FOR HYDROPOLL KALAMAZOO DIV
of BORG-WARNER CORP.
FURNISHED BY MICHIGAN WHEEL CO.,
STOCK M.P.

16 MARCH 1956

DAVID W. TAYLOR MODEL BASIN
WASHINGTON, D.C.

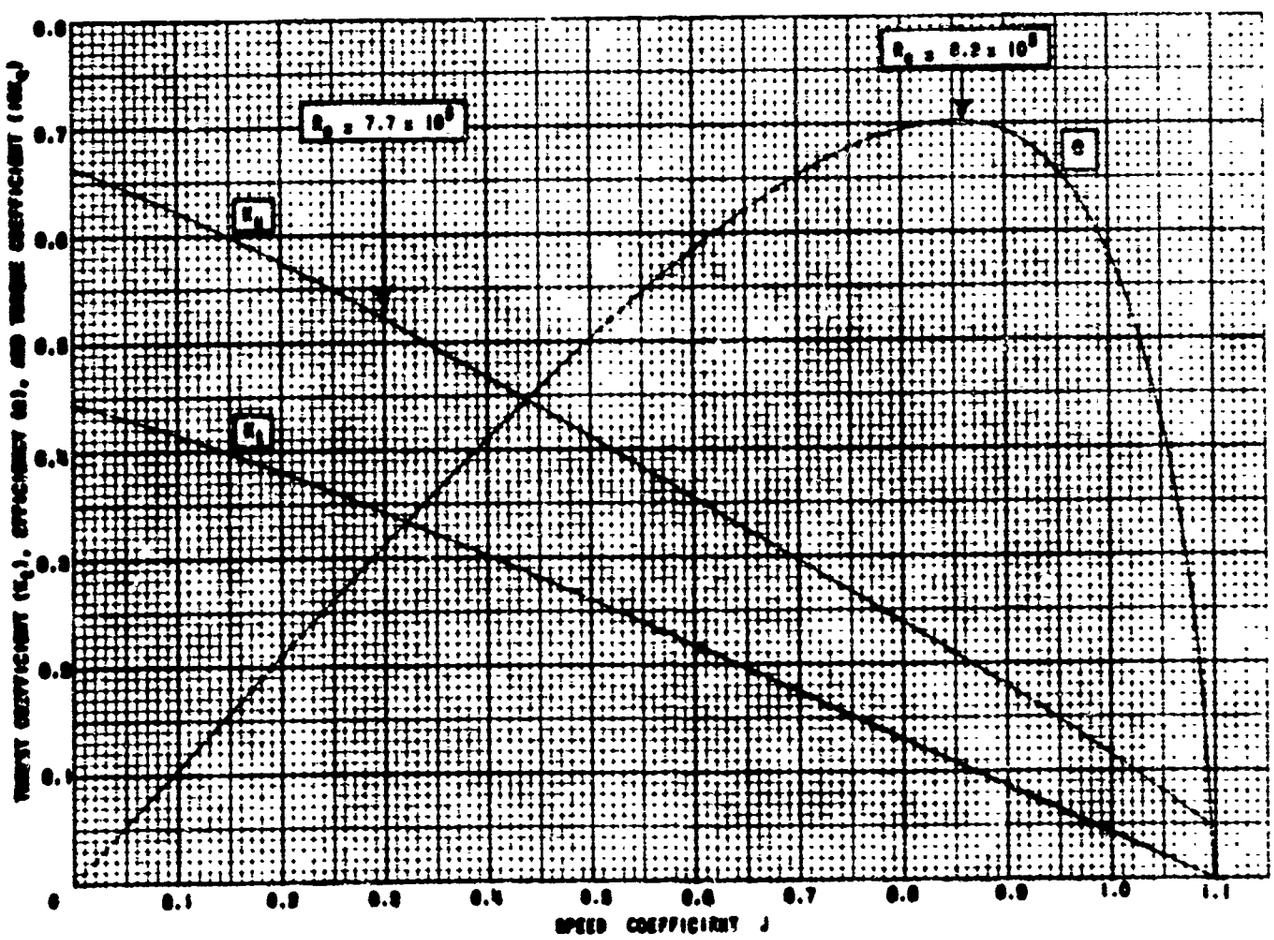

FIGURE 7b

8 percent for the 3.0-length wave, and 2 percent for the 4.0-length wave. The critical wave would be about twice the length of the amphibian, with water coming over the bow in waves of this size (that is, $L_w/H = 30$) and lengths from two to three times the length of the amphibian.

In earlier amphibians, deflectors were used to free the forward deck of water. Such deflectors were termed "surf deflectors" on the older DUKW. Tests so far on the LARC have not indicated that such deflectors would be needed except in heavy surf, where substantial amounts of water over the bow are often experienced. It is debatable whether a deflector would reduce the effect of the water on visibility; and with a tight hull, there is little danger from the water alone.

Propellers and Nozzles

A number of different propeller arrangements have been tried in past amphibians. Of necessity, the propeller must be set in a tunnel both to protect the propeller and to give the ground clearance required for mobility. As Albert Dawson of Dravo Corporation has often said, "The best tunnel is no tunnel at all." This being true to a distressing extent, there seems to be very little that can be done except to put the propeller in a tunnel and to accept the efficiency loss. One craft, a modification of the DRAKE, had a tunnel recess, with the propeller strut and rudder attached to a plate hinged at the forward edge. The

plate was arranged so that the propeller was housed in a tunnel when the craft landed and moved over the ground, but it could be lowered to present a smooth hull bottom when it was extended for sea propulsion. The difficulties encountered with this arrangement were as follows: the propeller shaft had to be fitted with a universal joint; there were problems of watertightness at the shaft line; a folding linkage, which also had to be quite rugged, had to be provided for the rudder; and the large hole caused a reduction of buoyancy aft (which was the worst problem). This system, while offering many advantages in propeller efficiency compared to the tunnel, was not acceptable.

Propellers and steering cannot be separated; so one craft, the SUPERDUCK (an experimental model), was fitted with a steering propeller by putting a universal joint in the shaft line and by allowing the thrust to be directed approximately 20 degrees to each side of center. As might be expected, the steering force necessary to hold the craft in a straight course was substantial. The steering was also quite sensitive, so that one had the impression of riding a bicycle that would take off in any direction if not constantly steered along a straight line. This concept, too, was discarded.

The World War II DUKW had a rather normal rudder in both position and area with the exception that the rudder was given a

negative rake of 20 degrees. Generally, the tunnels of amphibians are so deep that the water deflected by the rudder is straightened out by the tunnel sides, and the perpendicular rudder often has no appreciable effect. In the case of the DUKW, the negative rake deflected the water down and under the sides of the tunnel so that steering was very good under all conditions. At the same time, the edges of the tunnel were cut away to allow the water deflected by the rudder to pass to the side with little impedance. Inasmuch as rapid steering is necessary in surf to prevent broaching, the DUKW was fitted with a compound leverage system that allowed about two-thirds rudder movement with only a half turn of the steering wheel.

The LARC-5 went through a series of rudder experiments, as did its predecessors, which were occasioned by the fact that a Kort nozzle was fitted to this craft. The open screw, with 225 horsepower available at the wheel and with the diameter restricted by other considerations to 30 inches, allowed only 7.4 knots, with an EHP/SHP of 27.5 percent. When a modified Wageningen number 7 nozzle was fitted to the hull, the same shaft horsepower gave a speed of 8.65 knots, with an EHP/SHP of 42.75 percent. The advantage of Kort nozzles in the instance of amphibians seems well proved. It is interesting to note that only a fraction of the nozzle could be worked into this arrangement. There was serious question as to whether the

nozzle would be effective with only a partial sector. The results indicate that a large portion of the advantage of the nozzle does not come from the circulation around the nozzle but in the improved circulation around the propeller itself. Following the researches of Tachmindjii (of the David Taylor Model Basin), the edge clearance has been held at a minimum (1/8 inch to 1/4 inch between the ring and the propeller tip). This has led to higher tip loadings and greater efficiency. In previous considerations of the nozzle, it was felt that the clearance should be great enough to clear stones and gravel that might be picked up. The clearance that prevailed on these earlier versions was on the order of 5 percent of the diameter. Substantial increases in efficiency and performance were not evident in these earlier versions. It is believed that the major benefits to be gained from the use of Kort nozzles lie in the reduction of the tip losses and in the redistribution of propeller loading.

There was some concern as to whether, with the close clearances and the distinct possibility of tip cavitation, the erosion of the nozzle ring might be great. When the first LARC-5 was built, the nozzle was counterbored for a nylon insert, which, it was hoped, would absorb the energy of possible cavitation collapse. The nylon insert could not be held in place, and it was replaced temporarily with cold aluminum solder so that evaluation tests could be run. Since that time, about

1,000 hours of water operation have ensued without damage to the ring. It appears, at least for this amphibian, that the soft insert of solder is quite sufficient. This conclusion is not warranted if applied to larger craft, since quite hard metal is used in towboat nozzle insert rings and this metal would wear away at a fairly high rate.

The Kort nozzle has the effect of straightening out the slip stream to a noticeable extent. Rudder tests with the nozzle have not been exactly satisfactory. The LARC-5 at full speed has a turning diameter of about 90 feet, but has almost no steering at zero speed of advance. This was true of both the vertical rudder stock and one angled at 20 degrees, as was done in the DUKW. Moving the rudder stock aft some 16-1/2 inches improved the steering a great deal and gave some steering force at zero speed of advance. Other improvements along this line are now being tried.

Just a word is in order to explain why one should be concerned with steering force at zero craft speed, besides the rather obvious reason for maneuvering to get away from a bulkhead or ship side. In securing alongside ship, a sea painter is used, except that the sea painter is in the form of an after spring line. The amphibian runs ahead on the line and keeps it taut. When a sea passes, it

has the effect of slackening the line; but as the amphibian is running ahead, it soon takes up the slack and again moves to its position for loading. If the sea painter were streamed as usual, the impact of a sea added to the sternward force of the amphibian's propellers would break the line. A great many lines were broken in this manner before this simple rigging system was discovered. The added advantage of the amphibian's running ahead is that steerage way is maintained and the amphibian can be held close to the hull of the ship. This, then, is the reason for the requirement of good steering at zero velocity.

Time does not permit the discussion of many of the interesting amphibian hulls that have been developed, many of which have never passed the tank-test phase. It is important to mention, however, that the boat hull with the wheels entirely separate (as appendages) turned out to be one of the very poor performers. Significant improvement was realized when the wheels were recessed as much as possible into the hull. Further improvement was realized when the appendages were cleaned up and buried in the hull rather than allowed to make turbulence below. Perhaps the most significant improvement was the introduction of an advanced Kort nozzle, with the prospect of even greater improvements when the theory of the nozzle plus propeller is better understood.

LAND MOBILITY

The difficult terrain adjoining the sea is the land environment for which an amphibian must be designed. Beaches may consist of sand, coral cobbles, gravel shingles, alluvial deposits, and many other types of soil conditions. The frequent use of amphibians for stream crossings also imposes upon the craft the requirement of crossing all other remaining soils, at least to the best of the ability of the designers to make it so.

It is in order, then, to discuss the means by which a vehicle supports its load in the soil and effects propulsion from the application of force against the soil. This paper must, of necessity, be restricted to consideration of the pneumatic tire. That is difficult enough, since the pneumatic tire represents a very complex, deformable body in contact with a nonisotropic, semiplastic-to-elastic medium. These factors must be separated and considered in order.

Our interest in soils derives from four principal considerations. The load must be supported by the soil. Failure of the support results in excessive sinkage, so much so that at times the vehicle bottoms out. The soil may have so little cohesiveness or shear strength that the soil flows ahead of the wheel in bulldozer fashion. Again, the internal strength of the soil as related to the tire geometry may cause excessive

rutting, which would prevent following vehicles from easily traversing the road. In addition, the soil must sustain the propulsive force of the tires.

Since sand is perhaps the most common soil that the amphibian must travel across, let us look at this soil first. Here, again, analytic methods fail as to generalizations, since these sands vary in characteristics from the quartzose sands of the northern hemisphere to coral sands and decomposed shell sands of the tropics. On many of the beaches of the Pacific, the sands are composed of volcanic ash and pumice and on others, of pulverized obsidian and basalt.

Dry sand of a certain type is loose and fluffy. Moisture allows the sand to become compact and to bear large stresses, whereas excess moisture causes the sand to become quick and soupy and capable of sustaining no load at all. Old beach sand that is rounded tends to flow; whereas sharp, flat sand of degraded shell tends to pack more readily.

Analogies to the problem are not evident. In pure plastic flow of, say, thoroughly saturated loam or clay, a hydrodynamic analogy seems proper; but sand and rock defy this type of analysis. However, let us examine the mechanism by which support is given. It is assumed that the sand is of sufficient depth to act as a homogeneous body (that is, not stratified and with no boundary effects except the surface). Within

reasonable limits, the sand grain is expected to act as an elastic body; but in the aggregate, it is expected to act as a cohesionless, but frictional, medium.

If sand were placed in a container and stirred with a paddle, a shear path would develop. The shear resistance is the effect of displacement of each affected particle of sand upon its neighbor. If no load (that is, superimposed load) is placed upon the sand to hold the particles together, the shear resistance is a function of the shape of the particles and the coefficient of friction between the particles. Obviously, a particle does not slide with respect to another unless the force on the particle exceeds the friction between the particles, and this is a function of the superimposed load. If the particle slips over the lower particle (and this is the only direction of freedom available), it is displaced upward, with the result that, if the shearing force is continued, a mass of sand is bulldozed ahead of the shearing force. If, however, the level of the sand is maintained constant by, say, a large plate at the surface boundary, a completely different mechanism with respect to shear occurs. The grains, no longer free to displace and rise, can sustain a much higher load and shearing force until, as an ultimate, the material acts as an elastic body.

The implication is clear that improvement in mobility in sand

should seek to contain the sand under the tire and increase the loading on the sand. These are not mutually obtainable to an optimum degree if the weight of the vehicle is constant and the size finite. For any given size of vehicle, the tire should be of a size that would present a large area, that is, footprint, to the sand and of a configuration that would prevent the movement of sand to the surface.

Several criteria occur to us as pertaining to an optimum sand tire. The rolling resistance would be related to the following factors. It would be inversely proportional to the diameter of the tire, the mean radius of the footprint, and the footprint area and directly proportional to the carcass rigidity, the curvature of the tire cross section, and the lug depth and pattern. The adverse effect of lug depth arises from the additional shear paths that these lugs set up. In recent sand tires developed for the Transportation Corps, the lugs have been removed in favor of a ribbed circumferential pattern, which has reduced the rolling resistance to a considerable extend.

In soils other than sand, a degree of cohesiveness exists that must be recognized. In very fine-grain soils such as clays, where the grain size is all but colloidal, friction forces as such have little meaning, and viscosity more nearly represents the action of the soil under load. Most soils, however, are seldom pure sand or pure clay,

but are a mixture having some of the characteristics of both. Coulomb recognized the duality of conditions that result in shear stress in his classic equation:

$$\tau = c + \sigma \tan \phi$$

where

τ = shear stress

c = cohesion

σ = normal stress

ϕ = angle of friction.

Letoshnev assumes the pressure under a plate to be expressed by:

$$p = kZ^n$$

where

p = pressure

k = a proportionality constant

Z = sinkage

n = an exponent expressing the soil characteristic.

A discussion of this expression and its implications is given by Bekker in Reference 3. It will be recognized that the form of this equation represents a quasi-elastic state, which certainly does not exist in dry sand. The relationship does not account for the distribution of pressure that occurs from the center of the footprint to the

edge, where the pressure must eventually reach zero. The sinkage of a sand tire as measured indicates that differential sinkage occurs and that the pressures over the contact area are anything but constant, as would have to be true to lend validity to the foregoing equation.

In Bekker's development of these equations, the importance of sinkage is stressed.

$$Z = \left(\frac{P}{K}\right)^{\frac{1}{n}} ,$$

where K is defined as being composed of a cohesive modulus K_c divided by the breadth of the bearing plate plus the frictional modulus of deformation (see Reference 5); or

$$Z = \left(\frac{P}{\frac{K_c}{b} + K_\phi}\right)^{\frac{1}{n}} .$$

This leads one to conclude that an infinite breadth would give a plate maximum sinkage under constant pressure, K_c, and K_ϕ conditions. It is evident that, if extremely large plates were concerned, the effect would be the containment of the soil and a purely elastic sinkage would have to exist:

$$Z = cK^1 \text{ , or Hookes Law.}$$

It is therefore believed dangerous to apply such reasoning to much more than laboratory models.

It is apparent that the findings of classic soil mechanics are not sufficiently developed to explain the known conditions of a pneumatic tire traveling over terrain of various soil types. For this reason, several testing facilities have been built to measure

the forces acting on the tire under carefully controlled conditions. One of the test facilities is located at the Corps of Engineers Waterways Experiment Station, Vicksburg, Mississippi, (Reference 6). It is believed that this facility may be of interest to the marine profession because of its many similarities to the familiar towing tank.

The towing basin, in this case called the soil bin, is 6 feet wide at the top, 3 feet wide at the bottom, and 3 feet deep. The tank is 165 feet long. Soil samples are carefully selected, graded, and processed before they are put into the bin. Soil must be homogeneous and completely uniform for any specific test. Therefore, prior to each test run, the entire medium must be processed.

First, the soil is air-dried and then placed in a disintegrator, from which it is discharged in a finely ground condition into a pug mill, which mixes the soil with a carefully metered amount of water to produce a uniform moisture content. From the pug mill, the soil is discharged into the soil bin, where a small bulldozer and roller compact the soil to the desired degree of solidity. See Figure 8 and 9.

The towing rig is similar in many respects to the marine version. It is suspended on a cantilever structure from which is hung a pair of carefully aligned rails. A lightweight carriage, made of aluminum, is suspended from four wheels that ride the top of the rails. Guide

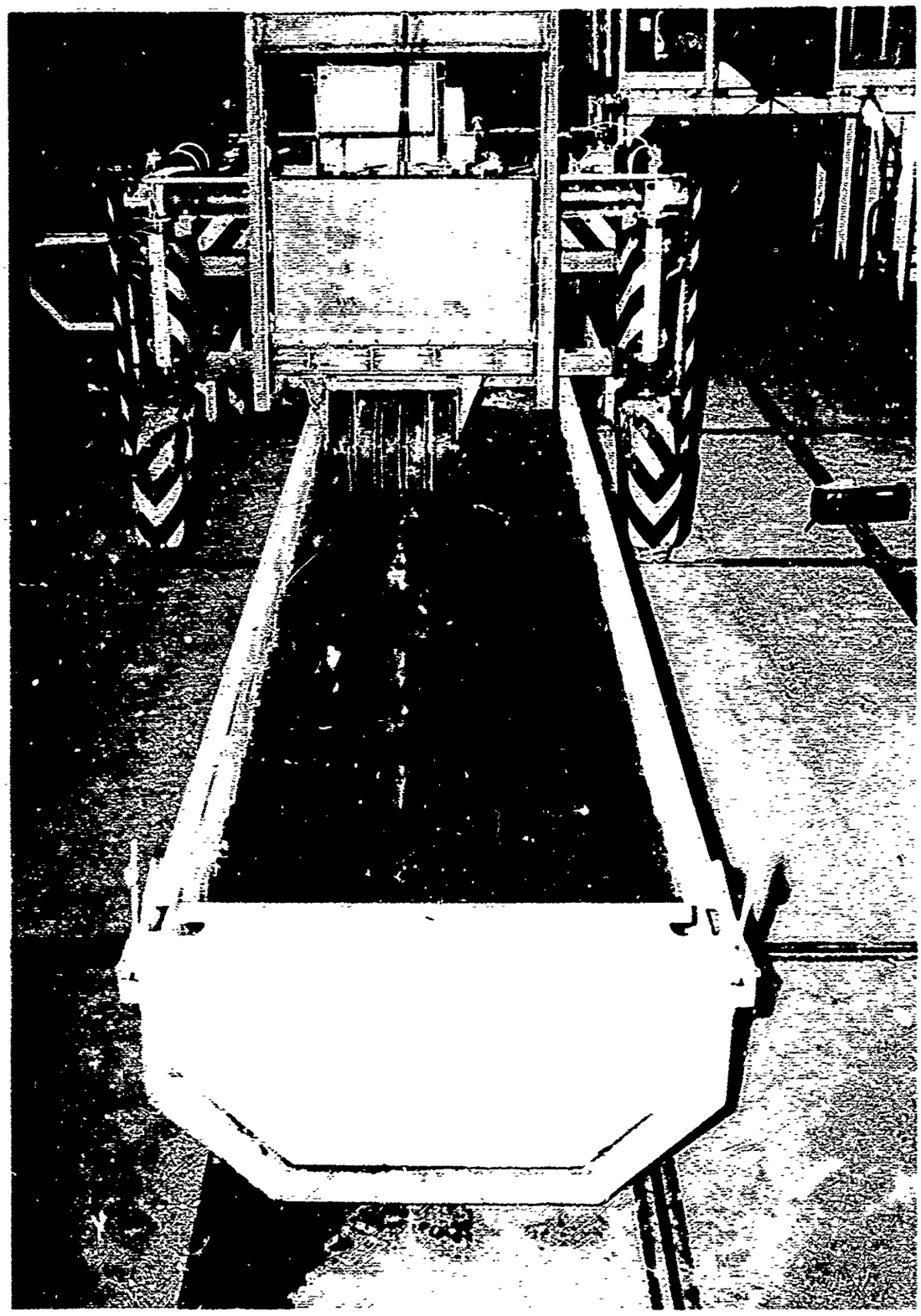

Figure 8. Mobile soil processor compacting (rolling) the top of a lift of soil.

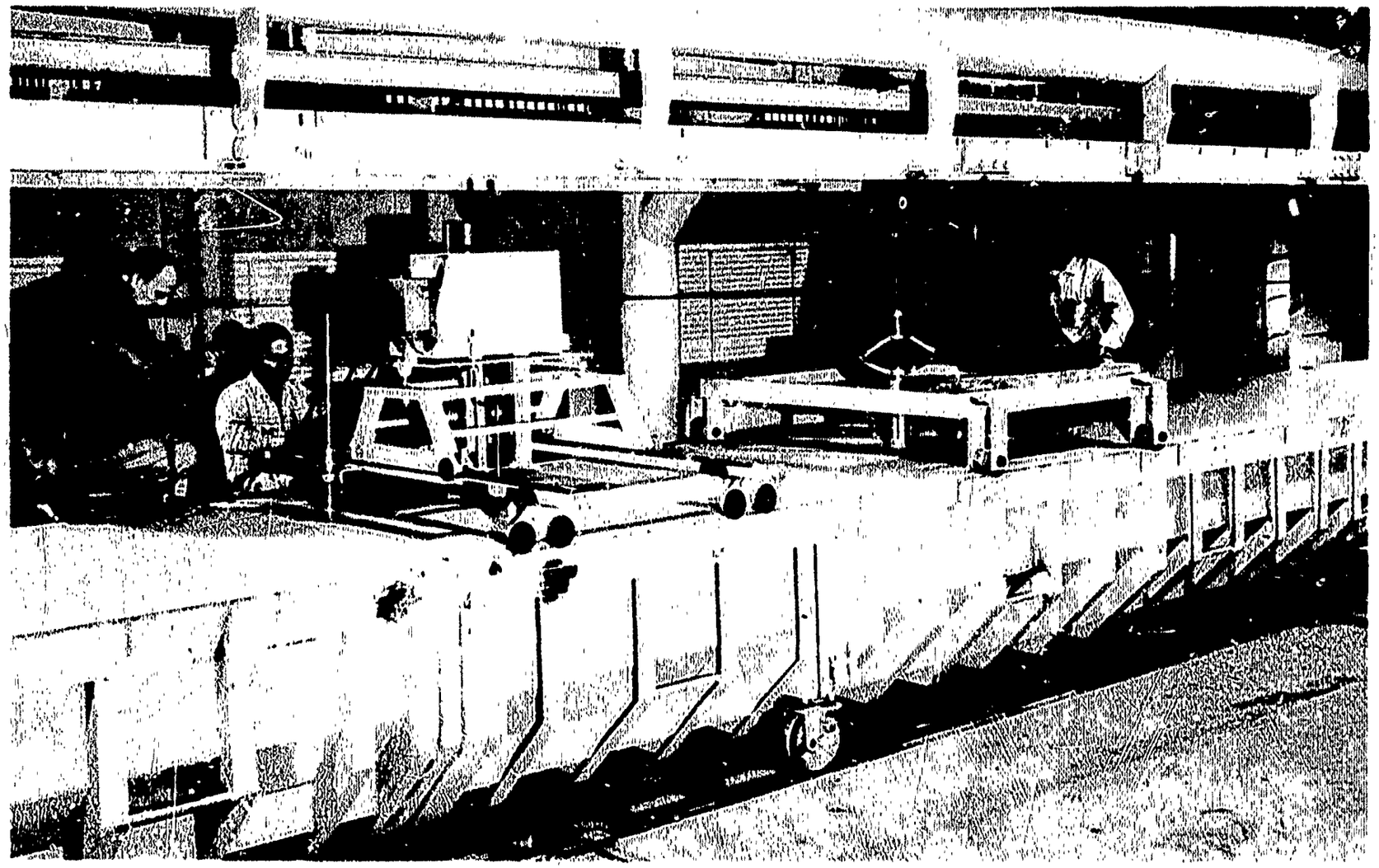

Figure 9. Simultaneous soil-strength tests (left to right) British shear vane, cone penetrometer, bevameter.

wheels are used on the bottom and sides of the rails. The carriage supports and guides the frame from which the wheel is tested. Load is placed on the wheel by weights in the pans of the swinging frame. The entire carriage is pulled along by a towing cable powered by a 30-horsepower, variable-speed, direct-current motor.

The model wheel can be tested either in a "towed" condition or, by means of a 10-horsepower hydraulic motor mounted on the carriage itself, in a self-propelled condition. The test carriage drive and the wheel motor may be driven simultaneously, so that the wheel can be tested at various slip ratios. The described carriage can take wheels up to 32 inches in diameter, which is about equivalent to a 9.00 by 14 tire. A larger facility at Vicksburg can take tires up to 80 inches in diameter by 36 inches in width, but with somewhat less ease than the smaller model basin.

In tests with the model, the following variables are measured: speed, horizontal force, sinkage, slippage, rolling resistance, tractive effort, variation in vertical load due to up-and-down motion of the wheel, flexing of the pneumatic tires, pressure contours on the tires themselves, and the stress induced by the model on the surface of the soil and within the soil surface. See Figure 10.

The exact scale factors relating model tests to full size results

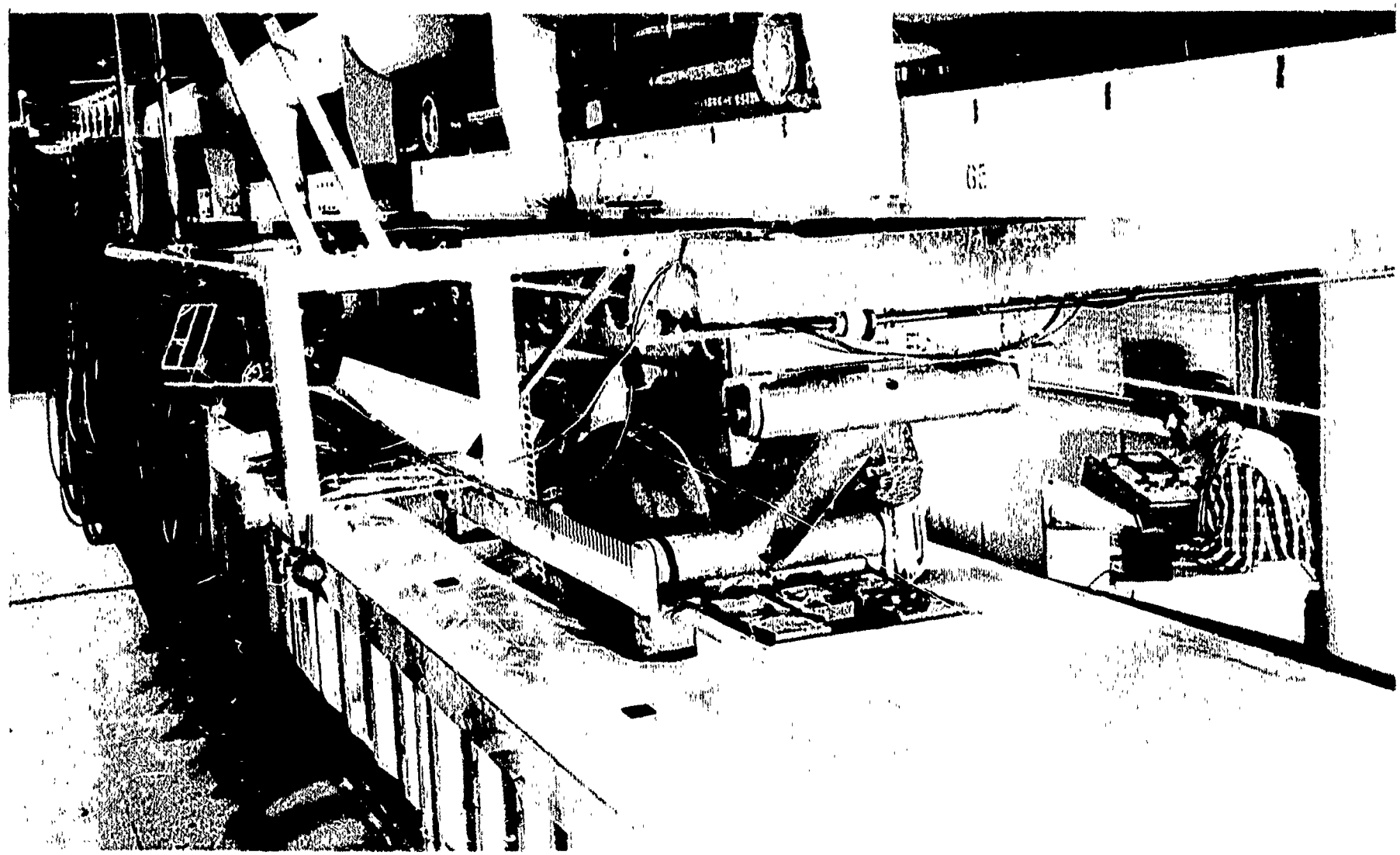

Figure 10. Towed test on a wheel in progress. Operator at console, motion picture camera on left, instrumentation cables on left, pan containing lead weights in foreground.

are not known; however, extensive tests by the Transportation Research Command at Fort Eustis, Virginia, have indicated that where the scale relationship is not large, that is, if the model is not smaller than one quarter of the full scale wheels, acceptable predictions may be gained by keeping the slip and tire deflection ratio (Deflection/Diameter) constant and the weight on the model equivalent to

$$\left(\frac{\text{Diameter of model}}{\text{Diameter of full scale wheel}}\right)^3 \text{ Weight of full scale wheel.}$$

$$W_m = W_f \left(\frac{d}{D}\right)^3$$

The testing being done at Fort Eustis is concerned with wheels traveling over natural soils "in situ", and furnishes an effective correlation between the laboratory and the full scale results.

The work done by the Waterways Experiment Station in the analysis of tire profiles (See Reference 9) is of interest as it gives an insight into the shape of a moving tire and the configuration of the surface it presents to the soil. In the referenced study, a 12 by 22.5 tubeless tire mounted on an M135, 2-1/2-ton, 6 x 6 truck was tested in six different soils. The soils were asphalt, sand, sod, gravel, firm clay, and soft clay.

Measurements of the tire cross section were made from the inside

of the tire, for obvious reasons, by means of linear potentiometers. The tire was buffed smooth to a final dimension of 11.00 by 20. Figure 11 indicates the cross section of the tire under some of these conditions. A plotting was made of the pressures exerted by the tire against a flat steel plate. See Figures 12, 13, and 14. It will be noted that the high friction between sand and rubber and between asphaltic cement and rubber resulted in a distinct inverted buckling of the tire at low pressures. In the case of soft clay, which has very little frictional resistance and a great deal of plasticity, the tire was all but flat on the bottom at low pressure; whereas at high pressure, the plastic flow of the clay allowed the tire to maintain almost its normal unloaded shape while the rutting was substantially increased.

The vertical pressures shown in Figures 12, 13, and 14 indicate the extreme variations between the inflation pressures and the actual pressures measured. It is interesting to note the effect of the side-wall rigidity on the pressure contours. The sidewalls have little effect at 60-psi inflation since the tire is largely resting on the center portion. At 30- and 15-psi inflation, the sidewalls have a marked effect. When operating in soft soil or in sand, the sidewalls actually project further into the soil than the center portion of the tire; thus the contact area is similiar in shape to an inverted saucer. Such an

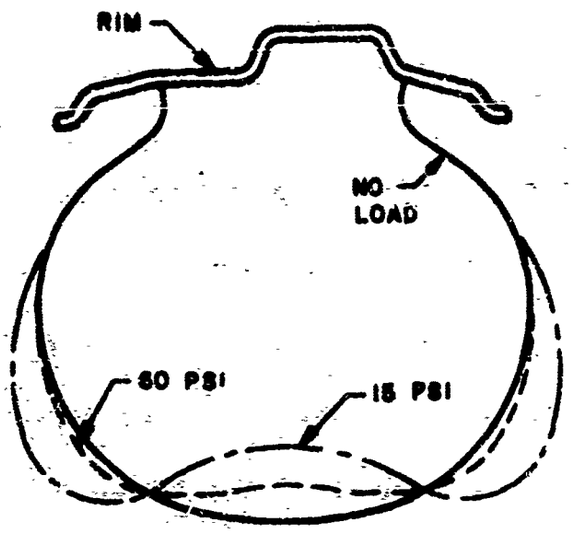

15 AND 60 PSI
ASPHALTIC CONCRETE

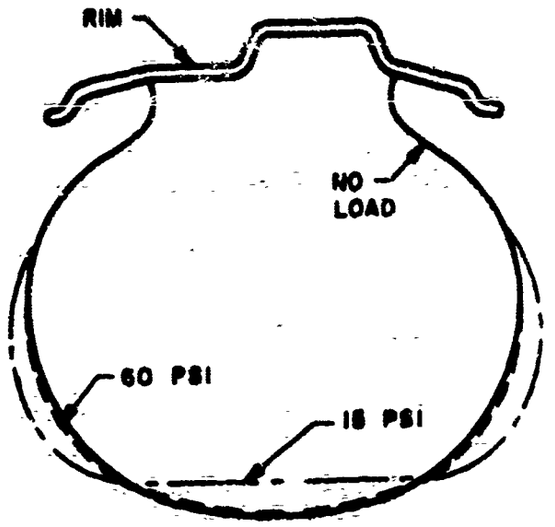

15 PSI AVG RUT DEPTH 3.7 IN.
CONE INDEX 48

60 PSI AVG RUT DEPTH 7.9 IN.
CONE INDEX 48

15 AND 60 PSI
SOFT CLAY

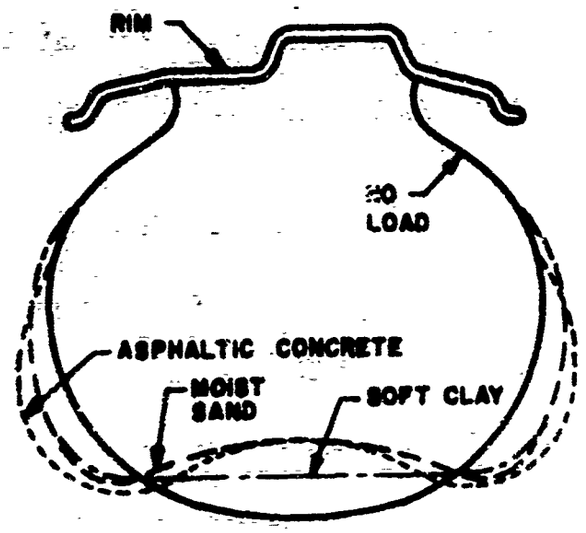

NOTE:

INSIDE CROSS SECTIONS
SPEED = 1 TO 4 MPH
WHEEL LOAD = 2,950 LB.

SOFT CLAY: AVG RUT DEPTH 3.7 IN.
CONE INDEX 48

SAND: AVG RUT DEPTH 1.0 IN.
CONE INDEX 78

15 PSI
THREE SURFACES

Figure 11. Deflection of a Moving 12 by 22.5 Tubeless Tire (per T.R. 3-516, U.S. Army Engineer Waterways Experiment Station, Vicksburg, Mississippi).

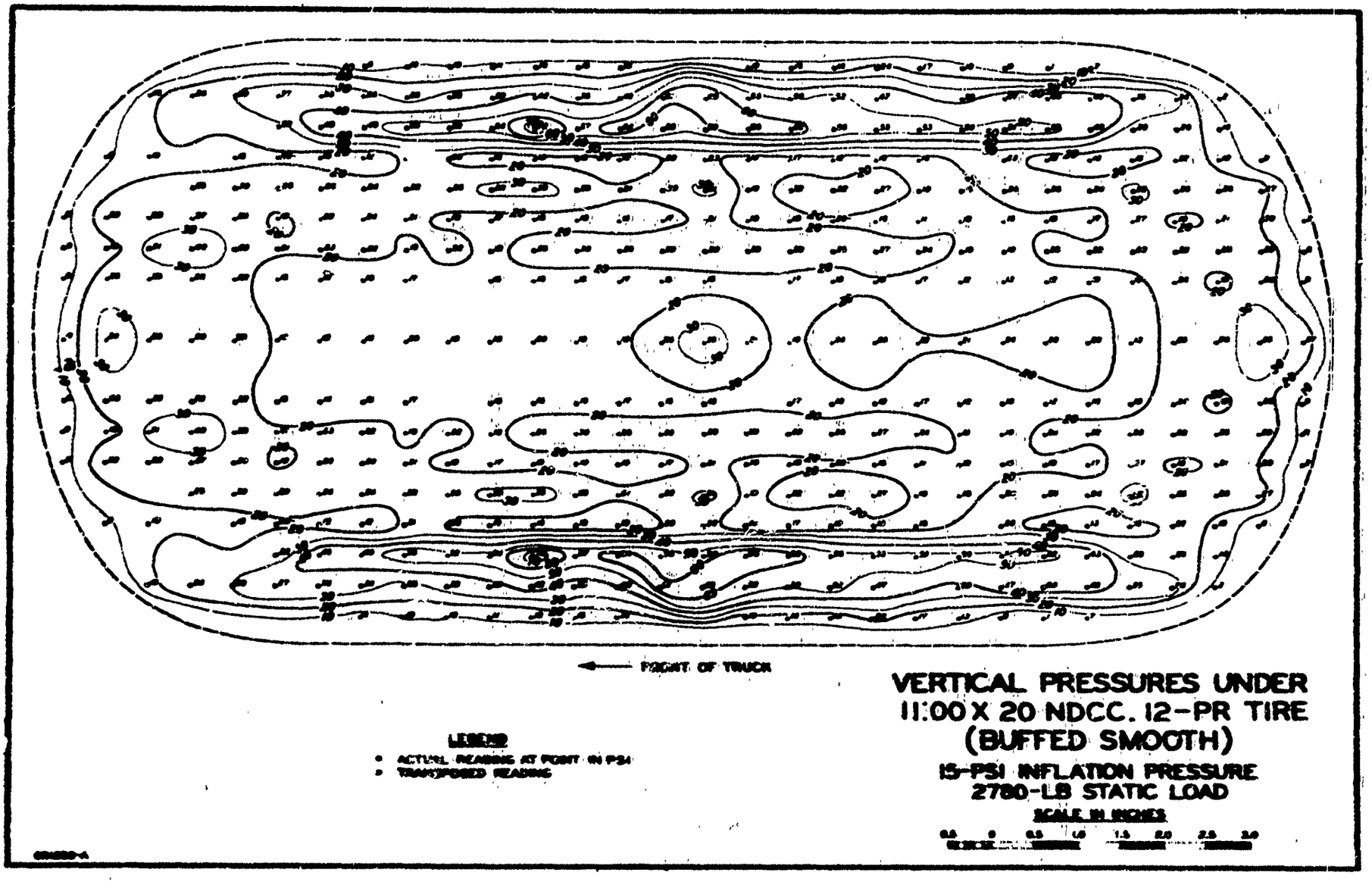
FRONT OF TRUCK
VERTICAL PRESSURES UNDER
11.00 X 20 NDCC. 12-PR TIRE
(BUFFED SMOOTH)
15-PSI INFLATION PRESSURE
2780-LB STATIC LOAD
SCALE IN INCHES
LEGEND
• ACTUAL READING AT POINT IN PSI
• TRANSPOSED READING

Figure 12

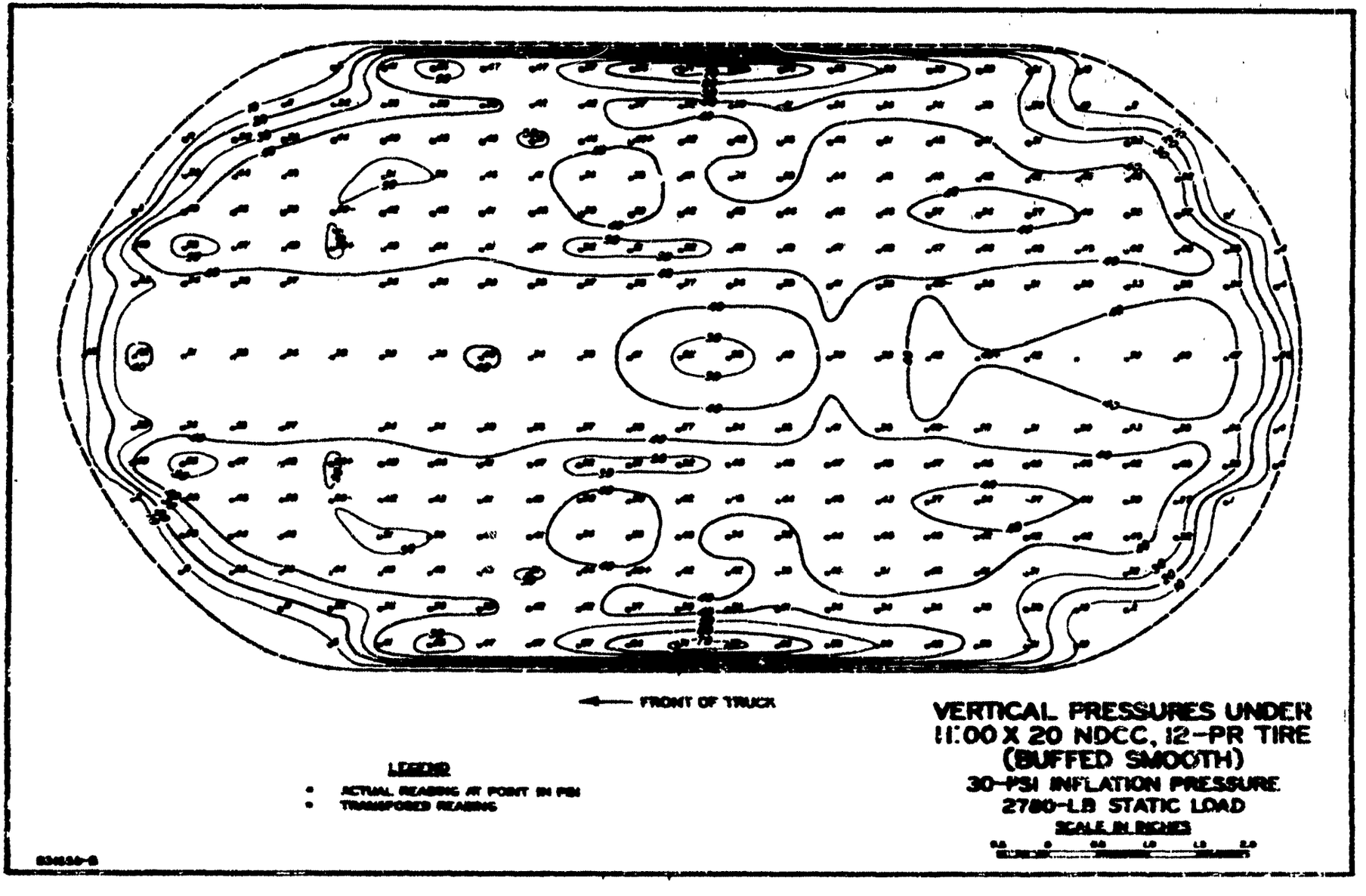
FRONT OF TRUCK
VERTICAL PRESSURES UNDER
11.00 X 20 NDCC, 12-PR TIRE
(BUFFED SMOOTH)
30-PSI INFLATION PRESSURE
2780-LB STATIC LOAD
SCALE IN INCHES
LEGEND
ACTUAL READING AT POINT IN PSI
TRANSPOSED READING

Figure 13

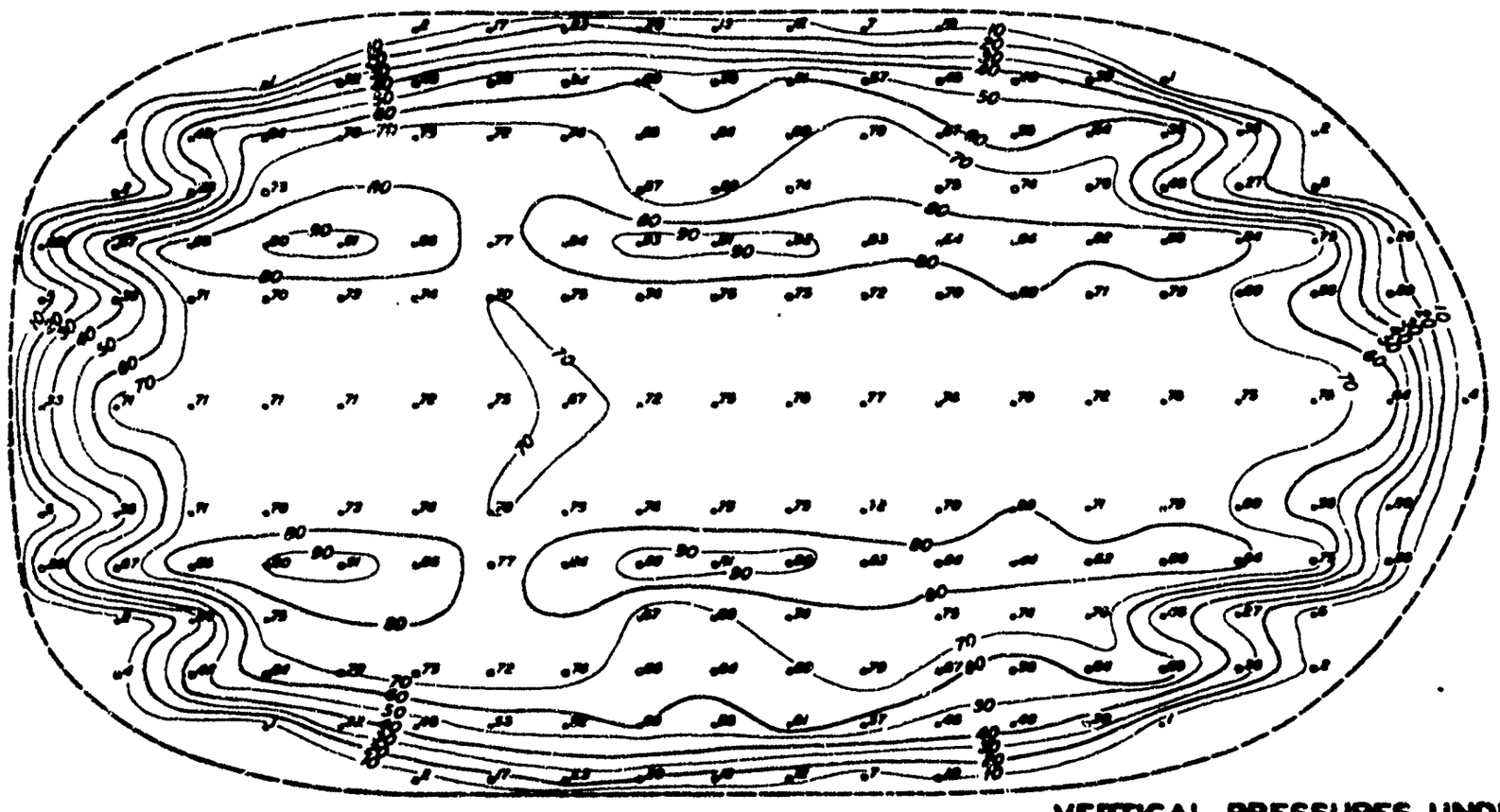

FRONT OF TRUCK

VERTICAL PRESSURES UNDER 11:00 X 20 NDCC, 12-PR TIRE (BUFFED SMOOTH)

80-PSI INFLATION PRESSURE
2780-LB STATIC LOAD

SCALE IN INCHES

0.5 0 0.5 1.0 1.5 2.0

LEGEND

- ACTUAL READING AT POINT IN PSI
- TRANSPOSED READING

03659-C

Figure 14

area tends to entrap the sand and effectively compacts it. This is the theory behind the so-called "high-flotation" tires. The compaction in sand is so pronounced that, in some areas where a man sinks into the undisturbed sand above his boot tops, he can walk quite easily in the track of a high-flotation tire.

One must not assume that the ground contact area is directly related to the weight on the tire divided by the inflation pressure. The following table gives the results of the integration of the pressure contours for Figures 12, 13, and 14.

Inflation Pressure (psi)	Measured Load (lb.)	Load Computed by Integration of Pressure Contours (lb.)	Gross Area of Contact (sq. in.)	Weight per Area Contact Pressure (psi)	Weighted Mean Contact Pressure (psi)
15	2780	2410	103.91	26.75	23.12
30	2780	2653	71.44	38.91	37.13
60	2780	2764	47.49	58.54	58.2

It will be noted that the computed load is very nearly the actual load; therefore, it is felt that reliance can be placed on such an experiment. The conclusion that can be drawn from this study is that the carcass stiffness has a relatively greater effect on the soil loading at lower inflation pressures than at higher inflation pressures. This might easily have been expected, since the extreme flexure of the lower inflated tires means that the tire as a beam is operating to

increase tire-soil pressure.

Tires, then, for off-road operation must necessarily be designed to accept this high flexing without distress. An interesting series of experiments has been made by the Arabian American Oil Company (References 10 and 11), who plotted the specific rolling resistance against the inflation pressure for a constant load. I have plotted this information for a typical vehicle in Figure 15.

It will be noted that a distinct low exists in such a curve. It appears that the curve is composed of two elements: (1) The resistance due to the flexing of the carcass and the dragging of the tire edges, which decrease as inflation pressure increases; and (2) The resistance due to displacement of the soil. That carcass flexing and edge dragging can consume large amounts of power is significant to any motorist who recalls his last flat tire.

Flexing can become so severe that tires are melted and often catch fire. Since the heat generated is a function of carcass stress, the heat can be reduced by reducing sidewall and tread thickness.

One interesting fallout of our experiments was the discovery that the number of revolutions of the wheel per mile is not what it was previously thought to be. It has always been considered that the

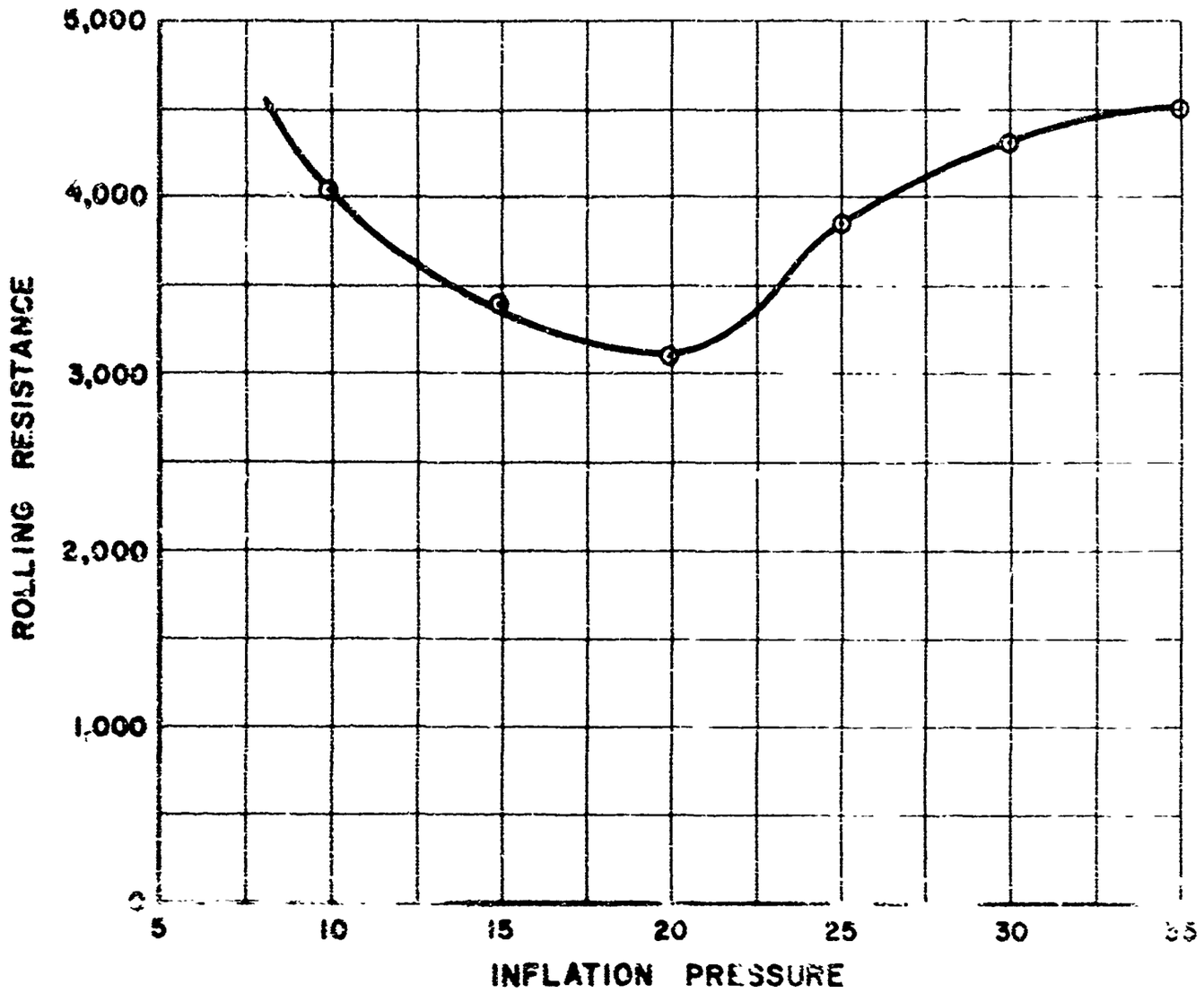

Figure 15. Rolling Resistance vs Inflation Pressures of a 11.00 x 20 Tire.

rolling radius was measured from the center of the axle to the ground. that is, the tire radius less the deflection. In the case of the LARC-5 at 19,100 pounds gross vehicle weight, the following were the measured revolutions per mile versus those computed for the deflections indicated.

Tire Pressure (psi)	Deflections As a % of Diameter	Rolling Radius (in)	Computed Revolutions per mile based on Rolling Radius	Actual Revolutions per mile of tire on concrete	Actual Rolling Radius (in)
30	2.67	28.4	354	348	28.9
25	3.17	28.1	359	351	28.75
20	3.50	27.9	362	355	28.4
15	4.42	27.35	369	359	28.1

These results indicate that the tire rolls on a radius quite different from that assumed and probably indicates that a differential slippage occurs between the center of the tire and the edges, which can easily account for the high rate of edge wear that is experienced when a tire is operated on concrete for extended periods at low inflation. There is one more conclusion that can be drawn from this experiment. The edges of the tire cannot be dragged along without a commensurate increase in rolling resistance. As the edges are being dragged along, additional slip is required in the other portions of the tire to maintain the average velocity; therefore this, too, increases the resistance. All of this suggests that it might be possible to design a tire that, when

deflected, would present to the soil a constant rolling radius. Such a tire should disturb the soil the least and should have the lowest rolling resistance.

The disturbance of the soil in the case of clays is to avoided, since ionic attraction between colloids is reduced and the clay becomes highly plastic; thus vehicles are rendered immobile.

During the period 1942-45, Colonel Karl Eklund of the Corps of Engineers (Reference 12) made an extensive investigation of the mobility of vehicles. The result of this investigation, which involved tests of some 26 different vehicles and 18 tire types, led to a modification of the basic Tire and Rim Association (T & RA) empirical formula for determination of optimum load capability of tires. The T & RA formula is as follows:

$$L = 0.425\,(S_1)^{1.39}\,(I)^{0.585}\,(D+S_1)$$

where

L = optimum economic load in pounds

$S_1 = \dfrac{S-0.4W}{0.75}$

S = tire sectional diameter when mounted on rim (in inches)

W = rim width in inches

I = inflation pressure, psi

D = rim diameter in inches.

If for any given tire and rim the S, S_1, W, and D are all constant, then the relationship between load and inflation pressure may be expressed

as

$$\frac{L_1}{L_2} = \left(\frac{I_1}{I_2}\right)^{0.585} .$$

The above loads, when computed for a given tire, result in the T & R A schedule T B-1 A, which is termed MH-1 (Military Highway Schedule 1) for military vehicle use. The fact that military vehicles (which are required to traverse terrain much more difficult than the usual highway vehicle) would require somewhat less inflation led to a reduction of inflation pressure of 25 percent from the equivalent civilian schedule.

Through a series of experiments and dimensional analyses, Eklund concluded that, since each tire size is associated with a different optimum load, the optimum load could be expressed in terms of parameters that define tire size and finally:

$$L = A(D)^{0.7515}(S)^{1.602}(I)^{0.585}$$

where

L = tire load in pounds
D = rim diameter in inches
S = maximum sectional diameter in inches
I = inflation pressure, psi.

Then A has values that vary according to the intended utilization of the tire

For	MH-1	A = 0.827
	MT-1	A = 0.976
	ML-1	A = 1.240
	ME-1	A = 1.860,

MH-1 being the schedule for military highway vehicles; MT-1 being the schedule for military tactical vehicles, where speeds were restricted to 25 miles per hour sustained and 35 miles per hour intermittant in off-road operation; ML-1 being the schedule for military limited, where inflation pressures were to be 50 percent of the MH-1 pressures and restricted to emergency operation in the 10- to 15-miles per hour range of speeds for off-road service; and ME-1 being the schedule for military emergency, which represented 25 percent of MH-1 inflation pressure and speeds restricted to 2 to 3 miles per hour to permit vehicles to extricate themselves from sand and mud traps, or to permit traversing otherwise impassable soft soil terrains, but never intended for long distance work. See Reference 10.

Eklund then determined how a departure from these optimum conditions would affect mobility, and developed what has long been a criterion for vehicle mobility (as related to pneumatic tires).

The Eklund equation applies to each tire on the vehicle.

$$MF = 1/2\,(200 - 100d)$$

where

MF = comparative mobility factor in percent

d = factor expressing the average departure from optimum of both load and inflation = $\frac{L_d + P_d}{2}$

$L_d = \frac{L_a - L_o}{L_o}$ = load departure from optimum

L_a = actual load in pounds

L_o = optimum load in pounds

P_d = inflation departure from optimum = $\frac{P_a - P_o}{P_o}$

P_a = actual inflation, psi

P_o = optimum inflation, psi

$$\text{or } MF = 1/2\left(200 - 100\left[\frac{(L_d + P_d)}{2}\right]\right)$$

$$MF = 150 - 25\left(\frac{L_a}{L_o} + \frac{P_a}{P_o}\right)$$

Optimum inflation pressure for schedule MT-1 was given as

$$OI = 2.32\,(D)^{0.271}\,(S)^{0.578}.$$

The results of these formulas are indicated on the following tabulation taken from Kerr's paper, Reference 10.

Schedule	Speed of Operation (mph)	Inflation % of TB-1A With Fixed Load	Load in % of TB-1A With Fixed Inflation
MH-1	50-70	100	100
MT-1	25-35	75	118
ML-1	10-15	50	150
ME-1	2-3	25	225

As an indication of the value of such a mobility factor, the following vehicles are mentioned with their respective factor:

1/4-Ton, 4 x 4 Jeep with 7.50 by 16 Tires	MF = 119
1/4-Ton, 4 x 4 Amphibious Jeep with 7.50 by 16 Tires	MF = 106
2 1/2-Ton, 6 x 6 Truck with 11.00 by 18 Tires	MF = 93
2 1/2-Ton, 6 x 6 Amphibious Truck DUKW with 11.00 by 18 Tires	MF = 77
1/4-Ton, 4 x 4 Amphibious Jeep with 6.00 by 16 Tires	MF = 67

Eklund succinctly notes that vehicles with mobility factors less than 85 are considered to be unsatisfactory from the standpoint of military requirements.

The relationships of the mobility factor to soil strength as indicated by the Cone Index has been explored by Foster and Knight of the Waterways Experiment Station (Reference 13). The Cone Index is measured by

forcing a cone into the soil and measuring the resistance of the soil to such penetration. The results of the studies indicate that there is a definite relationship between the Cone Index and the mobility factor.

Other methods of predetermining the mobility of a vehicle are being explored, but as yet no better predictions can be made than by using the results of model tests in soils or by referring to the Eklund mobility factor as related to soil strength.

It is realized that a great deal of space has been devoted to discussing tire selection; however, only a brief résumé has been presented of what is a most important and abstruse subject. I can do no better than refer those who are interested to the work of Mr. Richard Kerr (see References 10 and 11), who has expanded Eklund's researches quite a bit further and has proposed modified schedules for tire selection that are probably the most reliable that are available concerning off-road tires.

In passing, some qualitative differences between "hard" and "soft" tires can be made. The thin-wall, low-pressure tire is certainly more vulnerable to rock bruising, punctures, and impact cracking. However, it is important to recognize that the low-pressure tire tends to envelop obstructions that would cause tread tears in higher pressure tires. The heat generated in a carcass by flexure is greater for the heavy-walled tire if constant deflection is granted, and probably is higher

even at the lesser deflection normally designed for the higher pressure tires because of the higher stresses and longer heat path in these tires.

As to tread pattern, very little tread is required or desired in loose sand and on hard soils. In general, a ribbed tread is indicated. In soft plastic soils, where a vehicle must excavate soil until it can get down to the hardpan, the deeper tread pattern is required. It will be recognized, however, that the tread contributes mightily to the rolling resistance of a tire.

VEHICLE SUSPENSION SYSTEM

Intimately tied to vehicle mobility is the problem of vehicle suspension. Calculations for optimum tire sizes presuppose that all tires will carry the load assigned to them by the location of the center of gravity of the vehicle. This individual loading is, of course, subject to increase or decrease because of the height of the center of gravity and the slope that the vehicle is climbing.

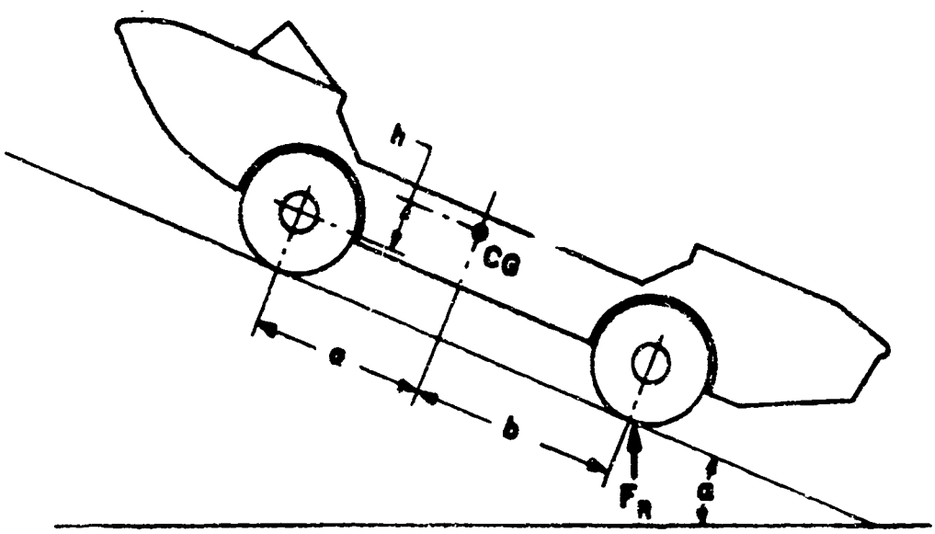

$$F_R = \frac{W(h \tan \alpha + a)}{a + b}$$

where

F_R = load on the two rear tires
W = total weight of vehicle
h = height of center of gravity above the wheel hub line
α = angle of slope
a = distance from front wheel center line to center of gravity
b = distance from after wheel center line to center of gravity.

The after wheels, then, take an increase in load while the front wheels take a decrease in load. This accounts for the rear wheels' digging in while the vehicle is ascending a grade and the front wheels' burying themselves while the vehicle is descending a grade.

Of more importance, though, is the load transference when one wheel is surmounting a rise or bump and the other wheels are on level ground. Here, if the frame and wheels are not free to accommodate this, the wheel on the hillock and the wheel diagonally opposite it take the entire weight of the vehicle. Some system is needed that would allow each wheel to carry its designed load despite these bumps. The severe torsional forces that occur during this period must be resisted by the frame structure of the vehicle. If the bumps are hit at speeds now considered minimal for amphibians, these bumps

are, in fact, impacts. For example, a 6-inch bump having a 45-degree face for a vehicle traveling 5 miles per hour would (assuming constant acceleration) give rise to an acceleration of 107.5 ft./sec.^{2}, or a little over a 3g impact. Such forces transmitted to the wheels and structure of the amphibian cause severe strains. It is, then, apparent that steps must be taken to reduce the impact loads. Springs accomplish this task in the normal vehicle. The spring arrangement usually is that of individual wheel springs. In this arrangement, the pneumatic tire is the spring in contact with the ground; and the axle, being supported by a spring, in turn carries the weight of the vehicle. The tire is not a mathematical spring, but has definite nonlinear characteristics. In general, the spring constant of the tire increases as the deflection begins and then decreases in the final portion of the deflection.

Certain damping is to expected from the tire in the form of transient compression of the air and flexure of the rubber; however, it is believed that these do not account for very much in the way of total vehicle damping. It is probable that the greatest damping experienced with respect to the tire is between the tire and the soil surface and within the soil itself. In 1952,

the large amphibian the BARC was dropped 13.5 inches by means of explosive shear pins. The BARC at this time weighed 198,000 pounds. It is significant to note that the BARC bounced three times clear of the ground and was barely in contact with the ground on the fourth bounce. The observed vertical frequency and pitching frequency were recorded at 1.25 cycles per second, with a damping factor of only 7 percent per cycle. Figure 16 illustrates the deflection caused by both the static loading and the dynamic loading of the drop itself, and illustrates the departure from linearity. Figure 17 gives the pressure increases as measured on the same tire as the pressure increased during the impact. This pressure increase partially compensates for the nonlinearity of the tire spring constant.

Considering first the unsprung vehicle, that is, the vehicle with only tires for springs, the vibration in all of its modes is quite complex. It will be recognized that the vehicle can have roll, pitch, heave, or vibration across corners. These are coupled vibrations, so all must be considered simultaneously:

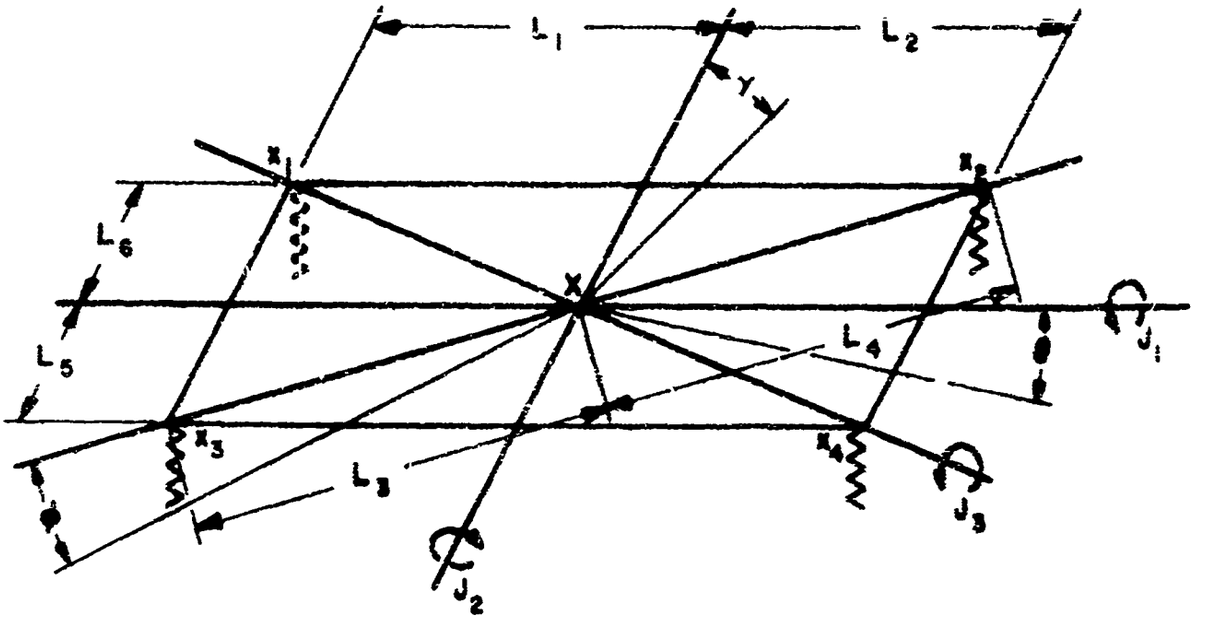

where

X = vertical displacements

L = lengths from center of gravity of vehicle to wheel center

γ = angular displacement in roll

θ = angular displacement in pitch

ϕ = angular displacement along diagonal planes

J_1 = polar moment of inertia around axis

J_2 = polar moment of inertia around longitudinal center line

J_3 = polar moment of inertia around diagonal center line

g = acceleration due to gravity

W = weight of vehicle, wheels, and tires

K_1, K_2, K_3, K_4 = spring constants of the tires

ω = angular velocity in radians $\times$ time^{-1} .

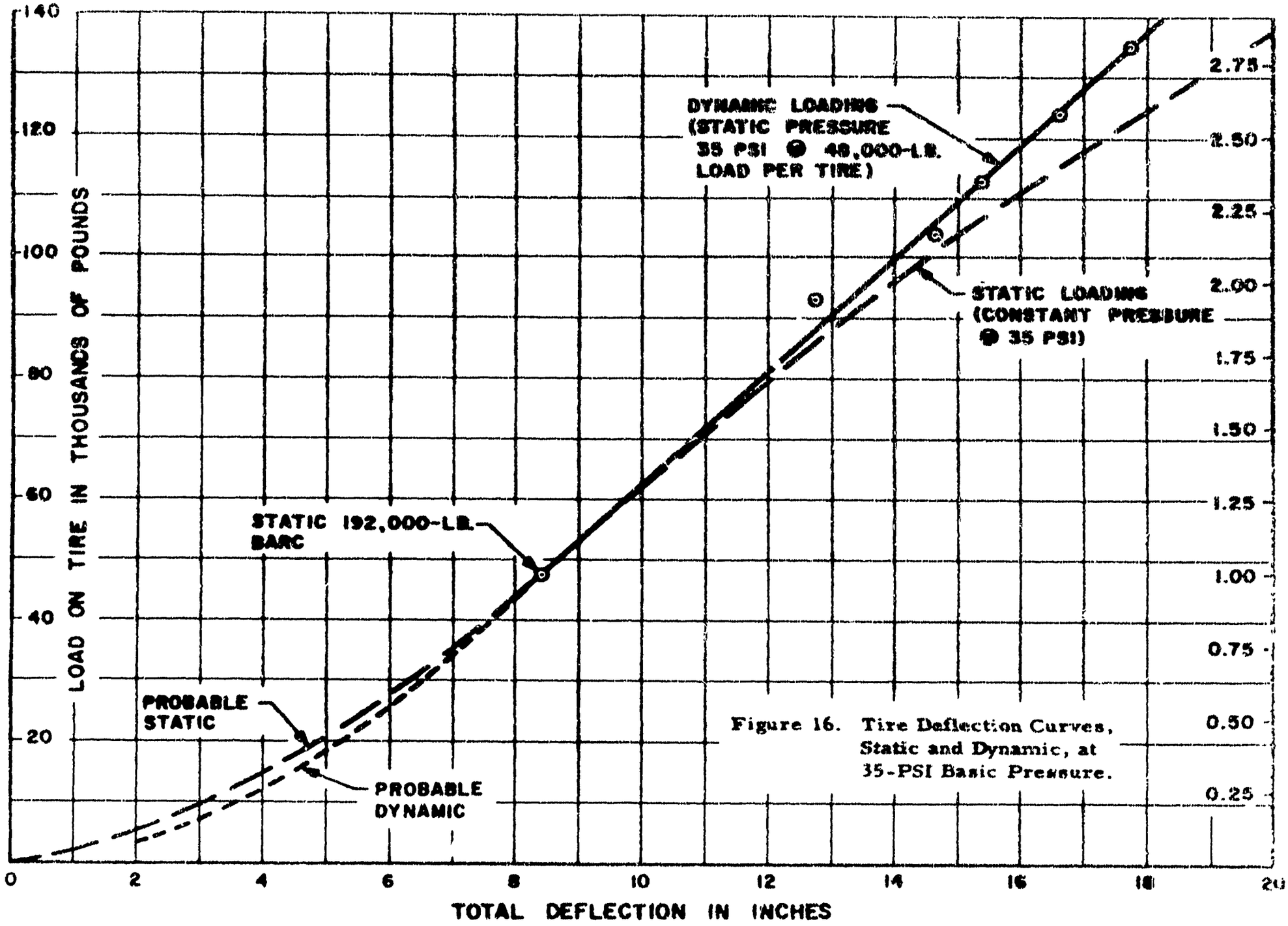

Figure 16. Tire Deflection Curves, Static and Dynamic, at 35-PSI Basic Pressure.

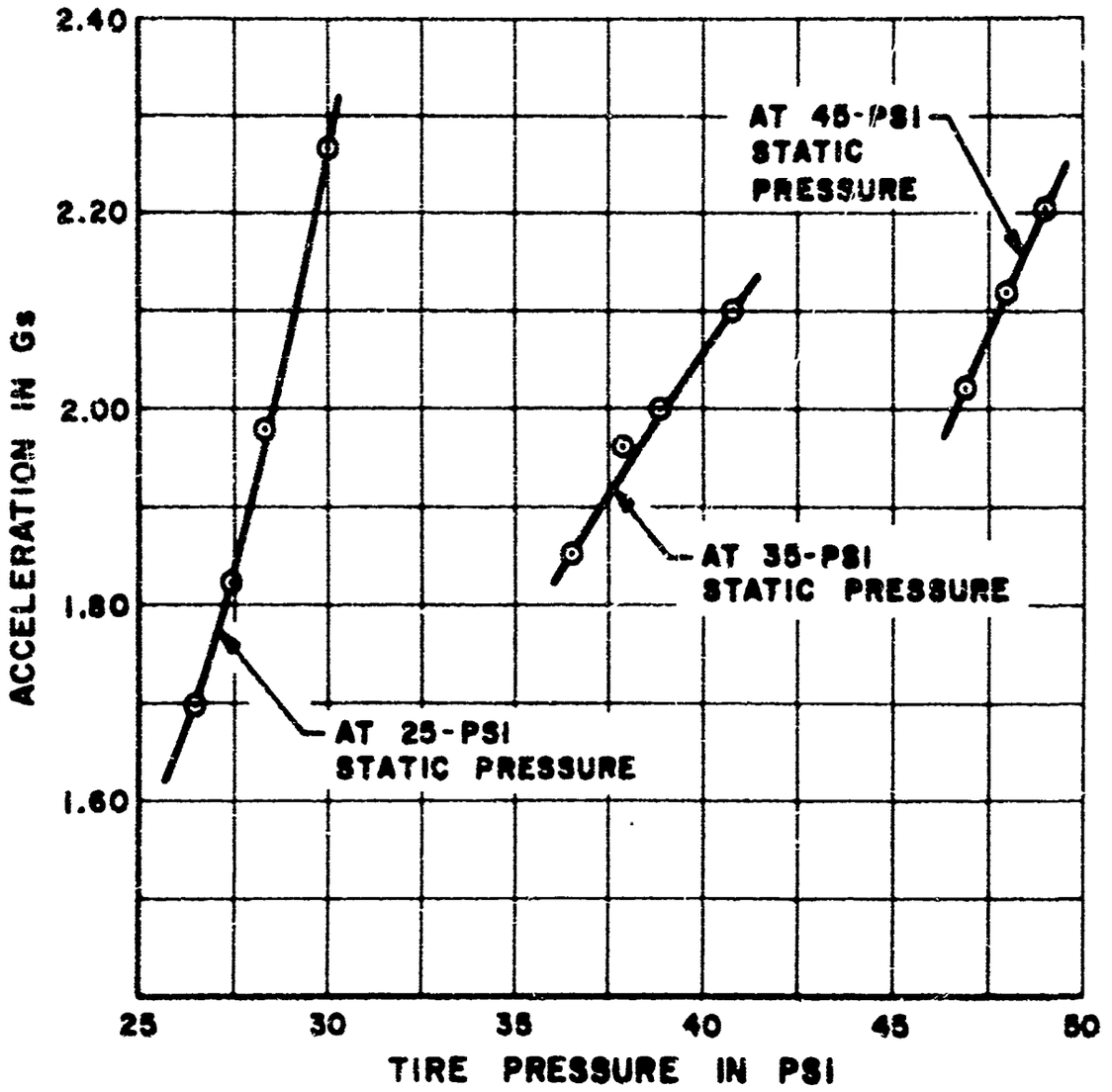

TOTAL DEFLECTION IN INCHES

Figure 17. Acceleration Versus Peak Tire Pressure.

The displacements at the center and the corners are:

$$
\begin{aligned}
X &= X \\
X_1 &= X + L_1\theta - L_6\gamma \\
X_2 &= X - L_2\theta - L_4\phi - L_6\gamma \\
X_3 &= X + L_1\theta + L_3\phi + L_5\gamma \\
X_4 &= X - L_2\theta + L_5\gamma \quad .
\end{aligned}
$$

For the above, the following equations describe the equilibrium of the system. See Reference 14.

$$\frac{W}{g}\frac{d^2X}{d+2} - K_1X_1 - K_2X_2 - K_3X_3 - K_4X_4 = 0$$

$$\frac{J_1}{g}\frac{d^2\theta}{d+2} + K_1X_1L_1 + K_3X_3L_1 - K_2X_2L_2 - K_4X_4L_2 = 0$$

$$\frac{J_2}{g}\frac{d^2\gamma}{d+2} + K_3X_3L_5 + K_4X_4L_5 - K_1X_1L_6 - K_2X_2L_6 = 0$$

$$\frac{J_3}{g}\frac{d^2\phi}{d+2} + K_3X_3L_3 - K_2X_2L_4 = 0$$

For the condition where the center of gravity is placed symmetrically with respect to the wheels and the spring constants of all wheels are equal,

$$K_1 = K_2 = K_3 = K_4 = K$$

$$\text{and } L_1 = L_2 = L_a \; ; \; L_3 = L_4 = L_b \; ; \; L_5 = L_6 = L_c \, .$$

Then we have the following determinant:

$$
\begin{vmatrix}
\frac{W}{g}\omega^2 - 4K & 0 & 0 & 0 \\
0 & \frac{J_1}{g}\omega^2 + 4KL_a^2 & 0 & 2KL_aL_b \\
0 & 0 & \frac{J_2}{g}\omega^2 + 4KL_c^2 & 2KL_bL_c \\
0 & 0 & 2KL_bL_c & \frac{J_3}{g}\omega^2 + 2KL_b^2
\end{vmatrix}
\equiv 0 \quad ,
$$

which, when expanded, gives a fourth-order equation in ω^2, the solution of which will give the angular velocities at the resonant condition.

$$\omega^8 \left(\frac{WJ_1J_2J_3}{g^4}\right) + \omega^6\left(\frac{2K}{g^3}\right)\left(2WJ_1J_3L_c^2 - 2J_1J_2J_3 + WJ_1J_2L_b^2 + 2WJ_2J_3L_a^2\right) +$$
$$\omega^4\left(\frac{4K^2}{g^2}\right) - \left(4J_1J_2L_c^2 - 4J_2J_3L_a^2 + 4J_3L_b^2L_c^2 - 2J_1J_2L_b^2 + J_1L_b^2L_c^2 +\right.$$
$$\left.2J_2L_a^2L_b^2\right) + \omega^2\left(\frac{16K^3L_b^2}{g}\right)\left(4J_3L_c^2 - J_1L_c^2 - 2J_2L_a^2 + WL_a^2L_c^2\right) -$$
$$64K^4L_a^2L_b^2L_c^2 = 0$$

Taking only the real values for ω, the resonant frequencies, of course, are:

$$f_{1,2,3,4} = \frac{\omega_{1,2,3;4}}{2\pi} \quad .$$

This is indeed laborious, particularly when it is realized that the vehicle with springs over the individual wheels has eight real solutions. Timoshenko (see Reference 15) simplifies the problem by assuming a 2-degree-of-freedom motion and concludes by giving a further simplification, in which he notes that a very simple 1-degree system, assuming the vehicle to be blocked and constrained under one set of wheels and rotating about that axle and then constraining the other axle and repeating the process, gives two frequencies that closely approximate the frequencies calculated by the more complicated system, although only the two most prominent

modes are considered.

From such calculations, an idea can be gained of the stresses imposed on the running gear and hull during cross-country operation. Such ideas, it is admitted, are rather tenuous, since the solutions presented represent only those for simple harmonic vibrations. A more realistic approach is to subject the vehicle to analysis by an analog computer. The forcing of the vehicle, of course, is at the wheels, so that an entire solution must apply a forcing function to each wheel separately. The analog fortunately can solve these problems in a matter of seconds, with forcing functions representing random terrain, a 6-inch curb, or any other conceivable earth configuration required. Such an analog can also simulate the speed from zero miles per hour to as fast as one cares to go. The use of such design devices, and that is all that a vehicle analog should be considered, is long overdue in the design of vehicles. Several of the major automotive companies now either have analogs or have computers on order. The Detroit Tank Arsenal also has such a machine to cover military vehicles designed by that agency.

Now the problem of vibration of the vehicle is a rather important one, not only from the standpoint of stress in the structure but also of driver and crew comfort. It might come as a surprise that the designers

of military vehicles are at all concerned about driver comfort, but such indeed is the case. Jacklin and Liddell of the Purdue Engineering Experiment Station proposed a criterion of comfort that corresponds approximately to the equation (see Reference 16);

$$af^{2.7} = 324,000$$

where
a = amplitude or displacement in inches
f = frequency of vibrations in cycles per minute.

Subsequently, the Cornell Aeronautical Laboratory also proposed a similar criterion (see Reference 17). As can be seen by Figure 18, the limits differ by rather significant amounts; and, as a commentary, the earlier criterion of Jacklin and Liddell allowed larger amplitudes prior to discomfort than were allowed by Cornell. It might almost be said that we require more in the way of comfort every year. Be that as it may, it is unlikely that any off-road vehicle like the amphibian will ever match Cadillac or Rolls Royce performance on a highway. Of more significance is the limit at which a driver feels inclined to throttle back to save his own sensibilities and in consideration of the vehicle.

The foregoing studies were conducted by shaking a subject at varying amplitudes and frequencies until he began to feel uncomfortable or until he "yelled uncle". I suggest that the tolerance

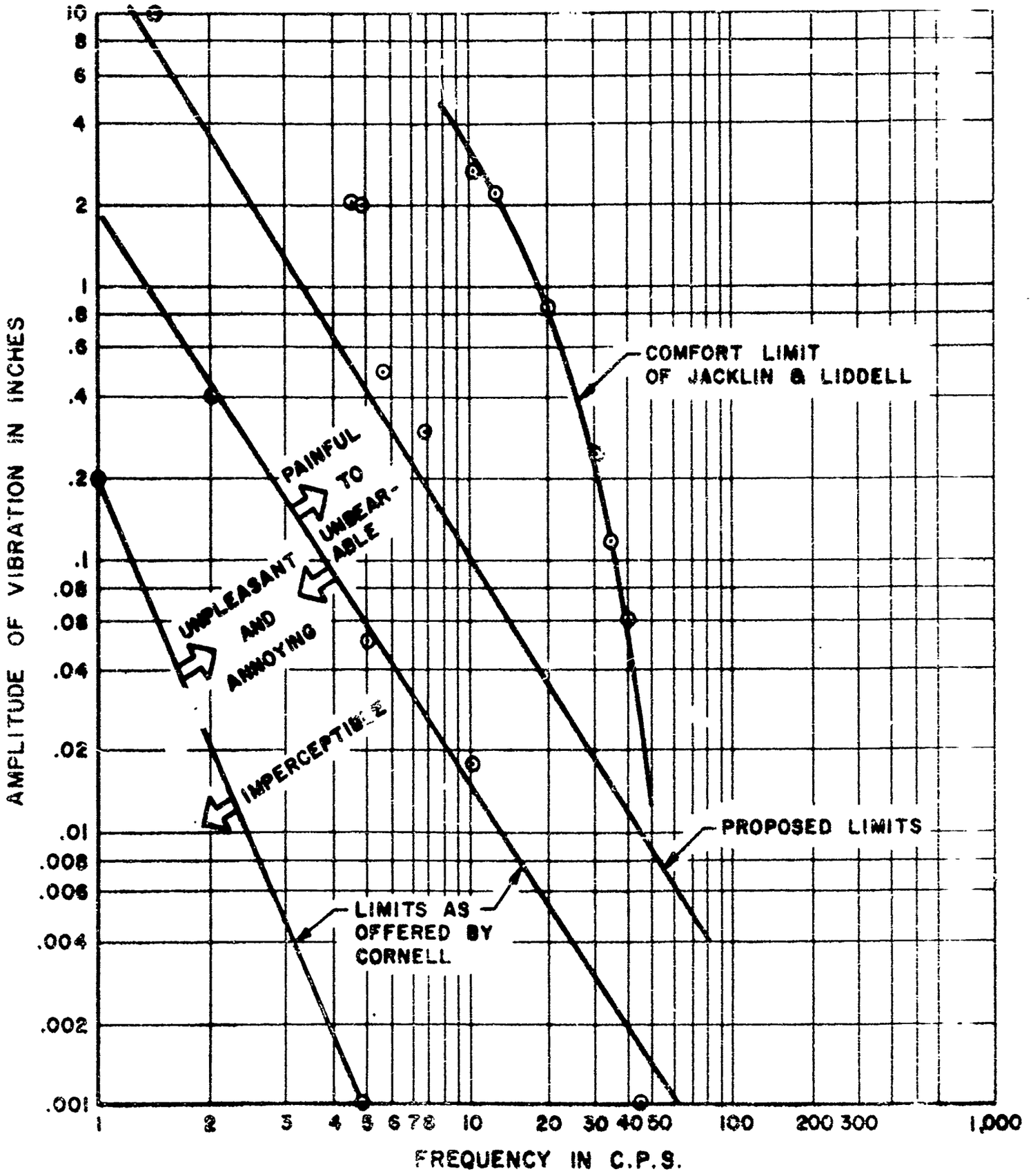

Figure 18. Human Response to Vibration.

level of vibration is more nearly that at which the human body's natural frequency is exceeded. To this end, a few subjects were enlisted and a record made of their "natural" frequencies: head shaking, head bobbing, arm and wrist motion, trunk vertical motion, and leg motion. From this totally inadequate number of samples, it appears that the human has a series of frequencies versus amplitudes that lies somewhat between the Cornell curve and that given by Jacklin and Liddell. The rationale for this treatment of the problem is that, if the imposed vibration lies to the left of the line, that is, has a frequency-amplitude relationship that is less than natural, the body can apply damping forces. If the frequency-amplitude is higher than the human natural frequency-amplitude, only minor damping can occur and the subject is uncomfortable. This relationship, it is felt, should be explored further.

Perhaps the most interesting feature of the vibration of vehicles is the response of the vehicle to the ground and the response of the man to the vehicle, which determine the limiting speed regardless of how much horsepower the designer puts into the craft or how urgent the mission. An example is the Sno-Train operating on the Greenland Icecap The design speed was 12 to 15 miles per hour, but the periodicity of the ice was such that the train operated

at 2 to 3 miles per hour for extended periods of time while traversing these ice fields.

In the unsprung vehicle, not too much has yet been done to damp the vibration. Experiments on the LARC-5 during its first runs indicated that bounce frequencies occurred at about 25 miles per hour on hard concrete pavement. The tires at that time were all inflated to 25 psi. Experiments were conducted in which the air pressure between front and rear tires was changed; a marked improvement in the ride was noted. An analysis of these data indicates that, with 30-psi pressure in both front and back tires, the average vertical acceleration is about 0.43g; with 20-psi pressure front and rear, the acceleration is reduced to 0.26g on a gravel road, with a gross vehicle weight of 19,100 pounds. At the same gross vehicle weight on a concrete pavement, 30-psi pressure front and rear gives an average acceleration of 0.13g; with 15-psi front and rear, the vehicle experiences a 0.21g acceleration; with 15-psi pressure forward and 25-psi pressure in the rear, the acceleration drops to 0.05g.

The vehicle responds even better to a completely random pressure setting, and is now running with pressures of 14, 16, 23, and 26 psi in the four tires.

Mention has been made in past years of adding a certain amount

of damping to the tire itself by partially filling it with water. This, of course, has certain undesirable effects in that additional weight is added, the tire does not deflect as well, and the deflection is limited since air volume is reduced. If, however, a powder were introduced into the tire, a marked damping could be achieved. The Led Ballast Company of Denver, Colorado, manufactures a number of powders of various densities, all of which, when placed in a tire, offer considerable damping. These results are gratifying in that they at least indicate that it is possible to build a damped tire.

By using an independent wheel suspension, an opportunity exists to match springing to the terrain conditions and to place dampers between the axle and the hull. The softest ride occurs when the ratio of sprung weight (hull and all that is supported by the springs) to unsprung weight (the axles, wheels, and tires) is the greatest. Unfortunately, as the unsprung weight decreases, the roadability decreases. The tire bounces off the ground both in traction and in braking, and steering becomes problematical. The ratio between sprung and unsprung weight in the average passenger automobile is about 5:1. A truck with load has a ratio of about 7:1. This ratio is not all of the story by any means, since the springing or bouncing characteristics are also determined by the relationship between the radius of gyration of the vehicle and the distance between the wheels.

If it is possible, it would seem that the wheels should be placed at the center of percussion of the body so that, should the front wheels encounter a bump, no effect would be felt by the rear wheels. Such a relationship would be expressed by:

$$K^2 = l_1 l_2$$

where

K = radius of gyration
l_1 = distance the front wheels are located from the center of gravity of the unsprung mass
l_2 = distance the rear wheels are located from the unsprung mass.

The above is derived as follows:

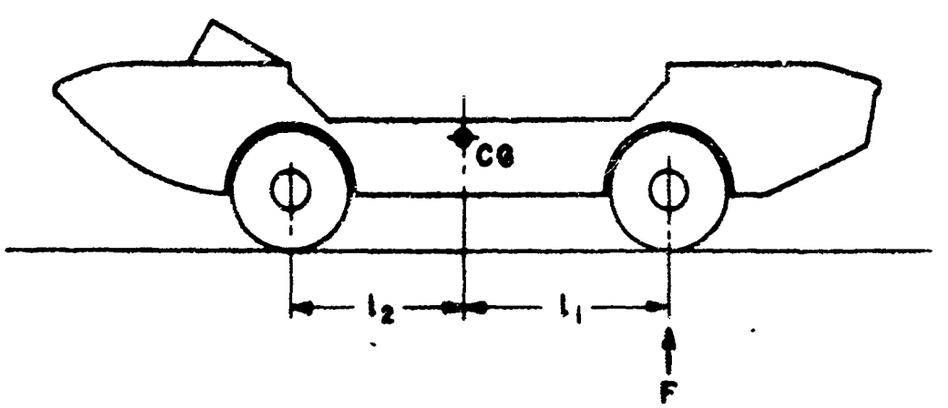

A force on the front wheel, F, would have two results: (1) a vertical acceleration of the center of gravity equal to the force divided by the mass and (2) an angular acceleration about the center of gravity.

$$a = \frac{F}{M}, \quad \alpha = \frac{F l_2}{I_p}$$

where

- a = vertical acceleration of the center of gravity
- F = force acting on the front wheel
- M = mass of the vehicle $= \frac{W}{g}$
- α = angular acceleration
- I_p = polar moment of inertia.

If we want the rear wheels to remain stationary under an impact on the front wheels, then the acceleration of the rear wheel must be zero:

$$\frac{F}{M} = \frac{F l_1 l_2}{I_p} \quad \text{or} \quad \frac{I_p}{M} = l_1 l_2$$

but $\frac{I_p}{M}$ is equal to the radius of gyration squared,

$$\text{or } k^2 = l_1 \; l_2.$$

By reason of symmetry, the center of gravity should be midway between the wheels, and the wheel base should equal twice the radius of gyration.

This is rather difficult to achieve, since it implies a significant mass fore and aft of the wheels; however, in amphibians, it can be

approached, since there is definite advantage in freeboard fore and aft, and placing weight in these sections allows freedom amidships for cargo carriage. With a cargo load approaching 50 percent of the gross vehicle weight, however, the problem is rather academic and can be approached only as nearly as design compromise will allow.

All amphibians prior to the BARC utilized springing. The DUKW had semielliptical springs resting on the rear axle housing with a full-floating rear axle, the same as the truck from which it originated. The front axle of the DUKW was of the single-reduction type, with full-floating axles and constant-velocity universal joints at the steering knuckles. The axle assembly was mounted on semielliptical springs. The axles were driven by a propeller shaft from the transfer case. The arrangement was good in that road shocks transmitted through the wheels could be partially absorbed by the mass of the wheels and axles, with only a portion reaching the hull. It must not be thought, however, that the frame and hull which would be called upon to withstand these torsional stresses could be reduced in strength because of the suspension system, since the full torsional load does occur when the spring bottoms and the opposite wheel leaves the ground. In addition, the water resistance of this large mass of gear hanging down from the hull was not conducive to water speed or economy.

When the BARC was first planned, the problems of springing each

wheel that carried 100,000 pounds of normal load and that would possibly carry momentarily somewhat over 200,000 pounds per wheel seemed rather insurmountable. It was suggested by Roderick Stephens that the springing be forgotten on this large amphibian and that complete dependence be placed on the resiliency of the tires. This was done with great success. A study, both analytically and by photoelastic analysis, indicated that undue stresses and deflections would not exist. In some 4 years of operating up to 18 BARCs, this design seems justified.

It must be admitted that the bumps that amphibians are required to traverse are not experienced by many vehicles and, indeed, are completely foreign to all highway vehicles. Therefore heroic measures must be taken in regard to strength, obstacle crossing, and other features. While it is not directly applicable to the amphibians discussed in this paper, Figure 19 illustrates a suspension system that was designed by Samuel Hickson of the U. S. Army Transportation Research Command for incorporation into a Landing Craft Retriever. It will be noticed that each wheel is supported on two hydraulic cylinders, with each cylinder connected by tubing to its nearest neighbor on the next wheel. In this manner, displacement upward of any one wheel requires the movement upward of the diagonally opposite wheel and sends the wheels in the two adjoining corners down at half the displacement of the first wheel. In this manner, every wheel is fully loaded at all times, and the vehicle

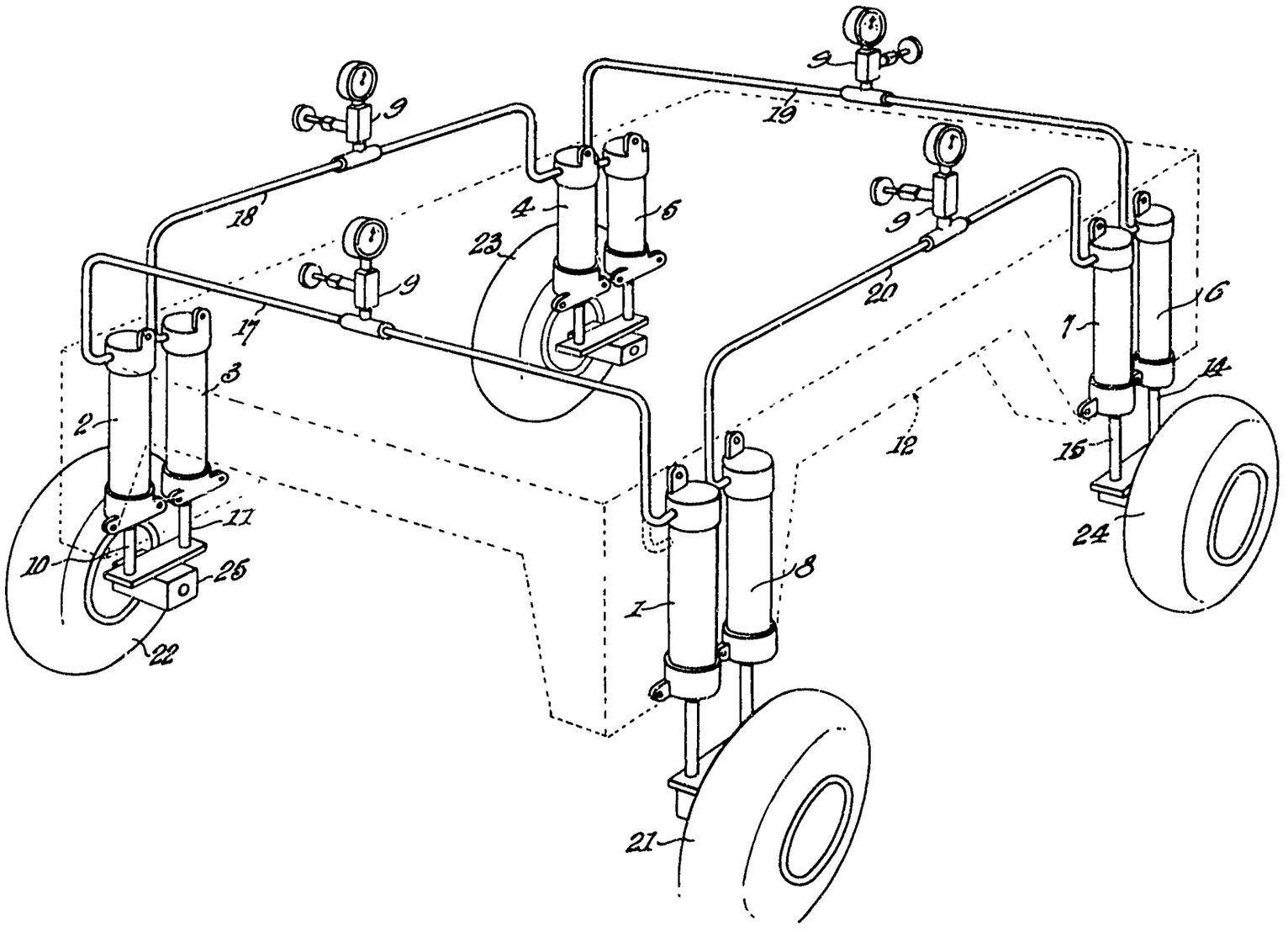

Figure 19. Suspension System.

can surmount objects twice the height allowed by the suspension of any single wheel. The Landing Craft Retriever, with only 30 inches of movement of any single wheel, can step over a 5-foot obstacle. This system could be given some resiliency by incorporating a gas-loaded accumulator in the tie lines, but such a system would be acceptable only for rather slow-moving objects traversing extremely rough terrain, since the inertia of the components would make the response quite slow.

POWER PLANT, TRANSMISSIONS, AND BRAKES

Selection of the power plant for the amphibian resolves itself generally to a choice of what is available. In general, this means a choice between gasoline, diesel, or gas-turbine engines. All of these have both advantages and disadvantages. For the power plant itself, let us consider these problems as they appear now.

	Gasoline	Diesel	Gas Turbine
1.	Low in cost/ horsepower	Moderate in cost/ horsepower	High in cost/ horsepower
2.	Burns only higher fractions	Burns no. 1, no. 2, and JP-4	Burns all high and moderate fractions
3.	Subject to explosions	Not subject to explosions	Not subject to explosions
4.	Many moving parts	Many moving parts	Few moving parts
5.	Maintenance moderate and generally available	Maintenance moderate and usually available	Maintenance low and usually not available
6.	Relatively quiet in operation	Somewhat noisy	Very noisy
7.	Requires external cooling	Requires external cooling	Requires no cooling
8.	Power delivered at medium rpm, requiring, say, 3:1 reduction to propeller	Power delivered at low rpm, requiring, say, 2:1 reduction	Power delivered at high rpm, requiring 30 to 40:1 reduction
9.	Requires moderate installation space	Requires large installation space	Requires small installation space

10.	Allows compression braking	Allows compression braking	Almost no compression braking
11.	Difficult to start in cold weather	Very difficult to start in cold weather	Easy to start in cold weather
12.	Weighs about 4.0 to 4.5 pounds/horsepower	Weighs about 17.0 pounds/horsepower	Weighs about 1 pound/horsepower
13.	Fuel consumption about 0.6 pounds/horsepower/hour	Fuel consumption about 0.45 pounds/horsepower/hour	Fuel consumption about 0.8 pounds/horsepower/hour

The above listing is, of course, changing from day to day; but, in all probability, it fairly represents the qualitative differences between the engine types that might be selected.

Now as for horsepower requirements, the marine requirements take precedence over the land requirements in every instance. If sufficient power is installed to accomplish the speeds in the water, ample power will be available for land use. For the moment, let us consider the power required for land operation. Rolling resistance is a function of both tire design and the soil, as previously discussed. Heldt, Reference 16, gives the following as typical.

Type of Surface	Rolling Resistance Coefficient in pounds per 1,000 pounds of Gross Vehicle Weight
Concrete	9.5
Asphalt-filled brick	10.0
Bituminous macadam	11.5
Untreated dry gravel (firm)	13.5
Loose gravel	25.0
Soft wet gravel	60.0
Iowa mud	100.0

These values are representative of high-inflation-pressure tires and are not necessarily valid for special low-inflation sand tires and the like. Tests of the BARC in the sand off Fort Lawton, Washington, indicate a coefficient of 53.5 to 65.7 pounds, the average being 59.6, per 1,000 pounds of gross vehicle weight depending upon tire pressure, which ranged from 45 to 60 psi.

The measured rolling resistance of the LARC-5 in sand is shown on Figure 20. It will be noted that speed has some effect, as does the tire pressure. The exact extent of these effects has not been quantitatively defined. The LARC-5 was designed to a rolling resistance of 70 pounds per 1,000 pounds. This figure seems entirely adequate for the low gear ranges which would be used when such resistance is encountered.

Grade-climbing capability must be added to the rolling resistance to get the total tractive effort necessary to propel the vehicle on land.

$$TE = R_r + W_g \sin \alpha$$

where

TE = tractive effort in pounds
R_r = rolling resistance in pounds for level ground
W_g = gross weight of vehicle
α = angle of the slope in degrees.

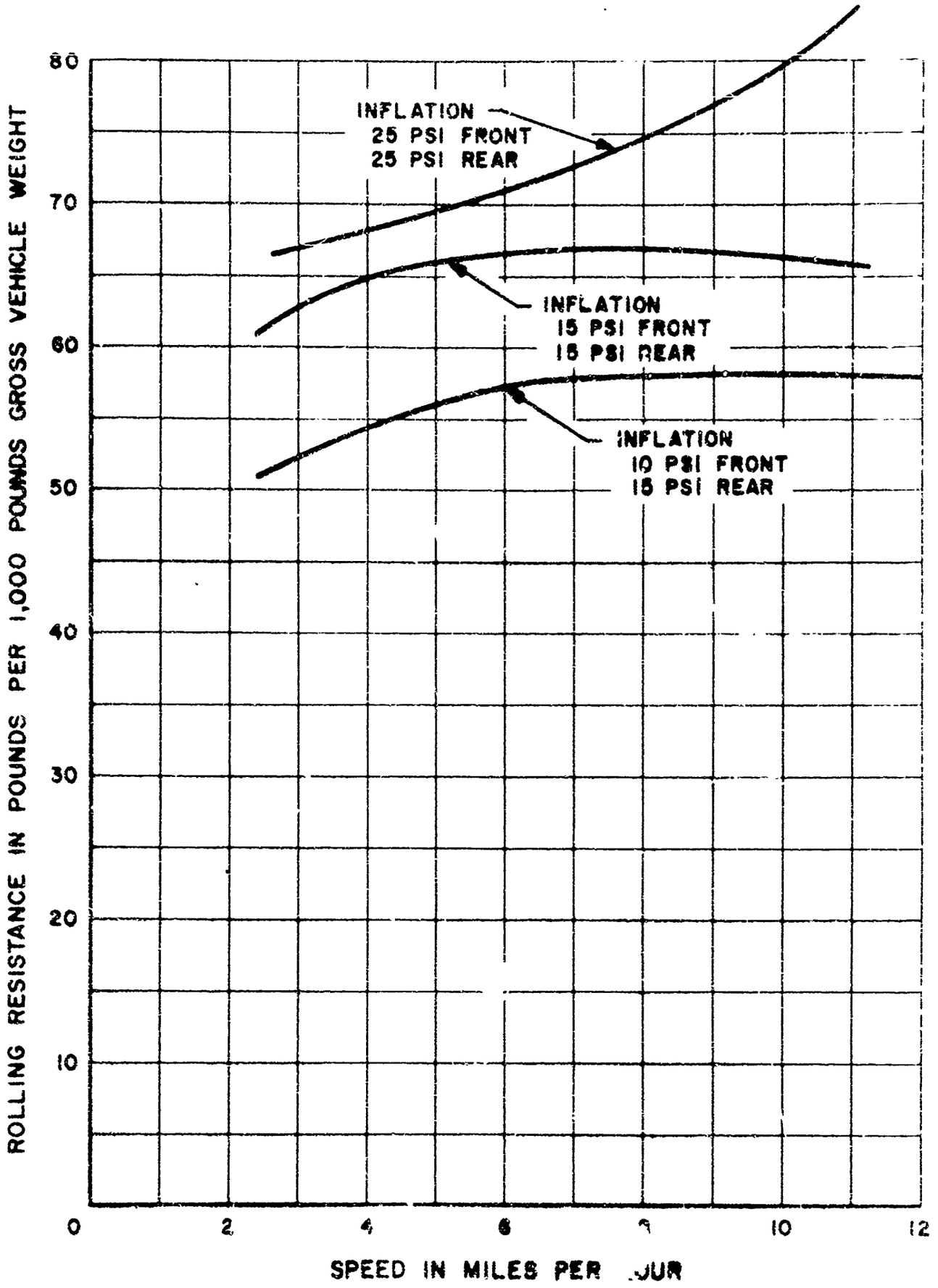

Figure 20. Rolling Resistance of LARC-5 in Soft Sand.

Plotting the tractive effort against the available tractive effort of the vehicle indicates the speeds at which various grades may be traversed.

In Figure 21, the tractive effort and gradeabilityof the LARC-5 is shown. It is noted that only two gear ratios are indicated in this figure that cover the entire range of grades at rather acceptable speeds.

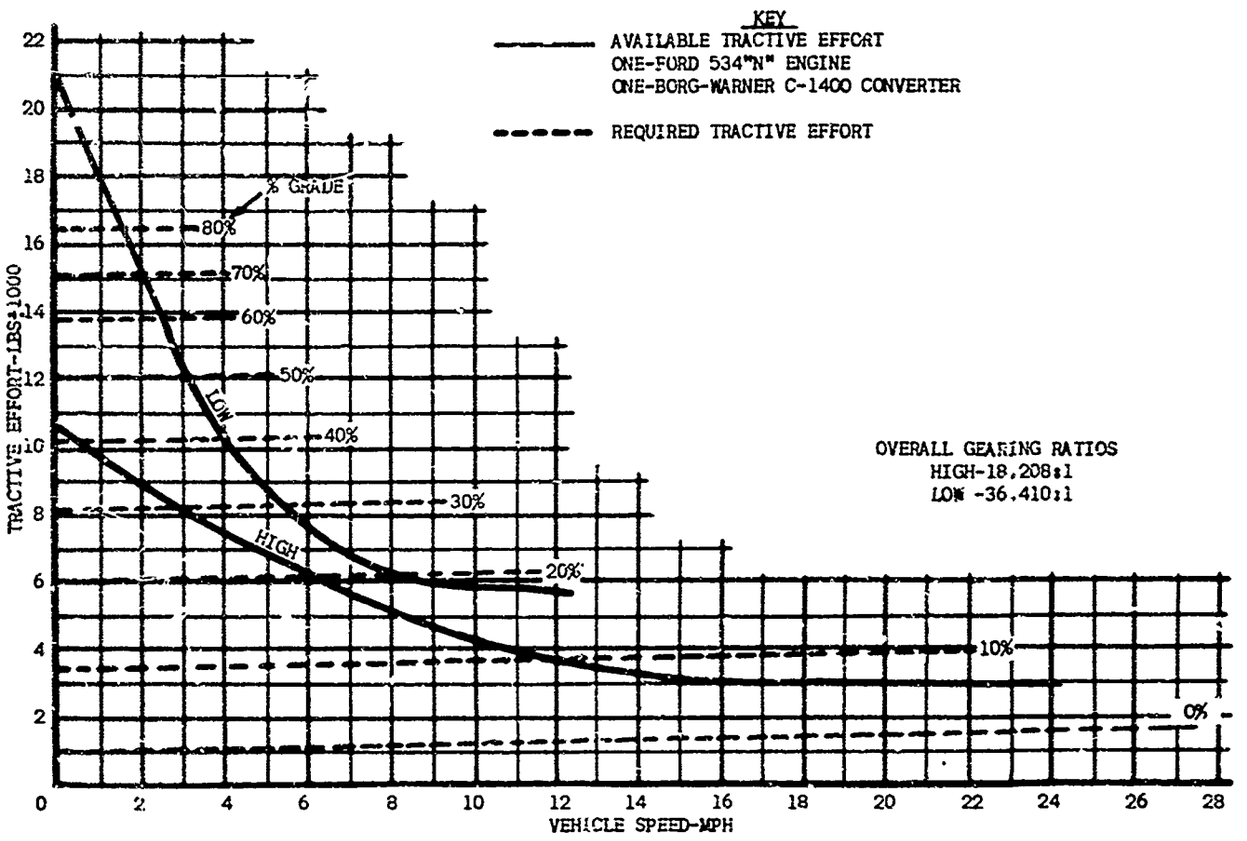

Figure 21. Tractive Effort and Gradeability Comparison.

There is no typical transmission system or power train. Every amphibian constitutes its own problem and dictates, to a large extent, its own solution; however, the rationale leading to the selection of components of the LARC-5 may be of interest.

The engine is an industrial gasoline engine of 270 gross horsepower at 3,200 rpm. Industrial engines have a horsepower rating as a stripped engine, that is, no cooling fans, circulating water pumps compressors, or other auxiliaries. It was determined that 30 horsepower would be consumed in the auxiliary equipment, with 240 left for propulsion. Figure 22 illustrates the general layout of the power train. Figure 23 gives the details of the gearing.

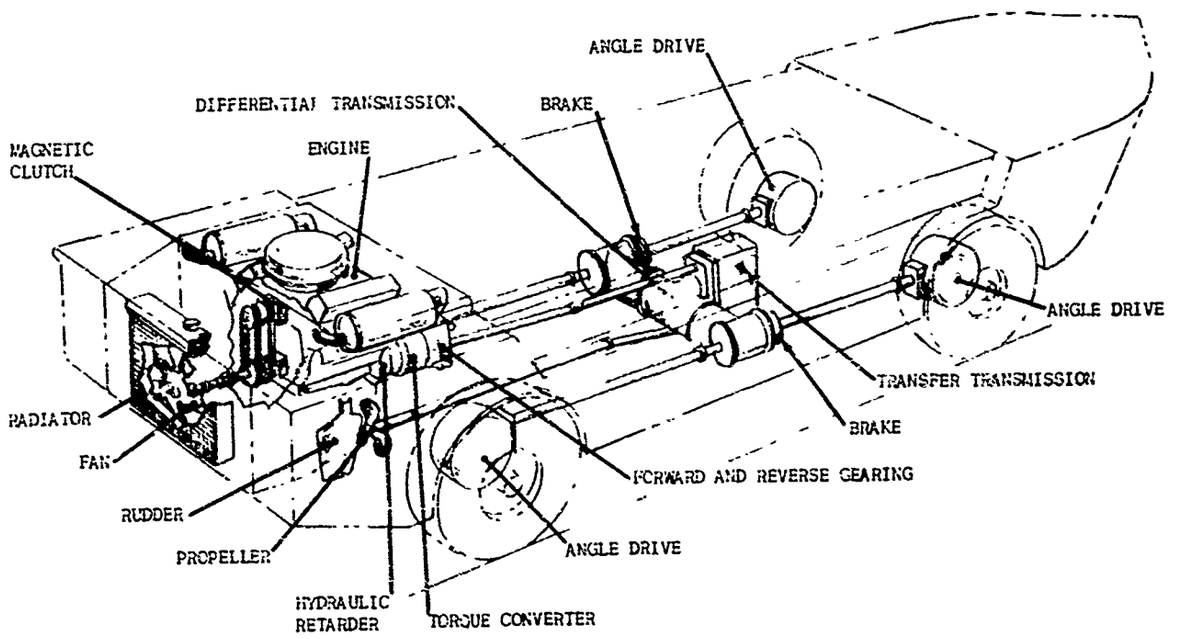

Figure 22. Power Train.

Attached to the engine is a torque converter that delivers 3.5 times the engine torque at stall on the output shaft of the torque converter. A hydraulically actuated disk-type clutch is provided in the torque converter for direct drive, when required. During water operation, and as desired for land operation, the lockup clutch is

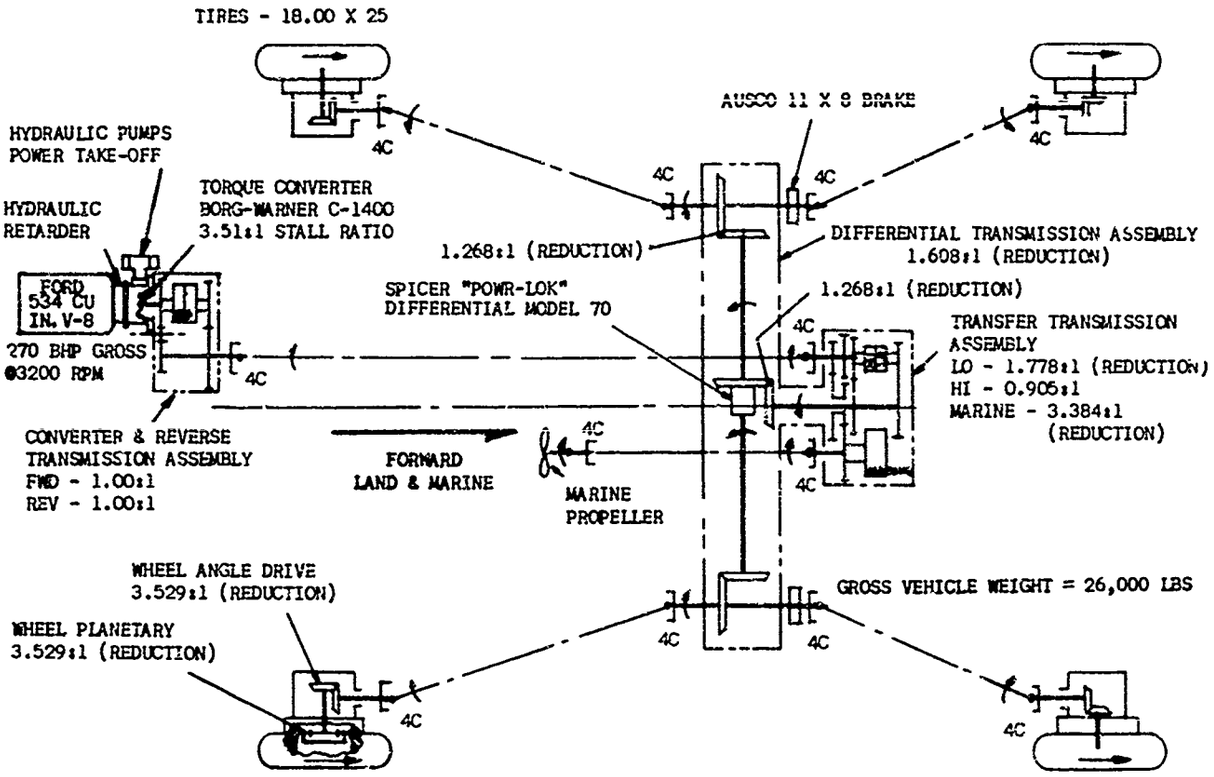

Figure 23. Power Train Schematic.

engaged to transmit torque directly to the forward and reverse gearing for maximum efficiency. The torque converter was incorporated not only to provide torque multiplication but to isolate the engine from road shocks, to assist in rapid acceleration, and to reduce the number of gear shifts from low- to high-range operation.

A hydraulic retarder is provided adjacent to the torque converter. The retarder may be used in conjunction with the vehicle service brakes in reducing the velocity of the vehicle or in holding the speed constant on long downhill grades. This has proved to be so effective

that the service brakes are used only for bringing the amphibian to a complete halt. The retarder is composed of a 13.3-inch aluminum rotor and mating grounded static blading, which, when filled with oil, dissipates the energy in much the same manner as a hydraulic dynamometer. The amount of retarding is controlled by a selector switch having three positions: "Fill", "Hold", and "Off".

In the "Fill" position, the retarder receives oil from the torque converter oil-out passage. In the "Hold" position, the oil supply is cut off and the retarder autocirculation provides flow to and from the heat exchanger, where the heat of the braking energy is dissipated. The torque converter oil-out passage is closed when the retarder is in the "Hold" position.

In the "Off" position, oil supply to the retarder is cut off, the torque converter oil-out passage is opened, and the retarder autocirculation pumps oil from the retarder cavity to the converter. The amount of oil in the retarder determines the braking torque, which is variable from 0 to 250 - 300 horsepower at 3,000-rpm rotor speed, depending upon how long the control is held in "Fill" position.

The retarder fill time is about 5 seconds, and the release time, about 1 second. The heat from the retarder is removed by an oil-to-water heat exchanger.

The power transmitted by the torque converter then passes through the forward and reverse gearing, which allows operation in

either direction at a gear ratio of 1:1. All reversing of both wheels and propeller is accomplished in the gearbox;, therefore, no separate marine reverse gear is required.

The transfer case is comprised of a low gear of 1.778:1 reduction ratio, a high gear of 6.905:1 reduction ratio, and a marine take-off with a 3.384:1 reduction ratio. The selection of the reduction gear ratios is somewhat arbitrary, since it is dependent upon the grade-climbing ability and the maximum speed required.

Torque for the wheels from the transfer transmission is transmitted through a 1.268:1 reduction bevel gear to a differential, which divides the torque between the starboard and port wheels. The differential is of the no-spin type; that is, if one wheel begins to slip, the torque is diverted to the opposite wheels, and thus the spin characteristics are limited. Some concern was expressed in the early stages of this design as to whether a single differential was sufficient, since the front wheels travel further than the rear wheels in a turn (this being true for the front-wheel-steering configuration particularly). Such a "windup" between the front and rear wheels is not particularly significant, however, since the entire gearing system can safely transmit sufficient torque to spin the wheels on concrete pavement. The large tires used also seem to have the ability to deflect, possibly by partially folding, in order to accept this difference in turning diameter without placing an inordinate load on the transmission gearing.

From each end of the differential, the torque is further divided between front and rear wheels through a 1.268:1 bevel reduction gear. The final wheel drives consist of a bevel gear of 3.529:1 reduction ratio and a 3.529:1 planetary gear mounted in the wheel hub itself. The full reduction for high gear is 18.208:1 and for low gear is 36.410:1.

The wheel brakes are part of the power train. In all amphibians prior to the BARC, brakes were installed in the wheels to prevent back loading of gears and transmission. It is true that, in normal vehicles, the braking torques are literally multiples of the driving torque. Tests conducted by General Motors at the General Motors proving grounds indicated that a vehicle could be decelerated at approximately 19.5 ft./sec.^{2}, which corresponds to a coefficient of friction of about 0.70 between the tire and the dry, level, concrete pavement. It was further concluded that this rate not only was uncomfortable, but was likely to result in personal injury. A deceleration of 13.9 ft./sec.^{2} was severe and uncomfortable and classed as an emergency stop by the driver. The maximum deceleration that does not interfere with passenger comfort is about 8.5 ft./sec.^{2}.

At the acceleration of 19.5 ft./sec.^{2}, the force at the tire of the LARC-5 would be 4,250 pounds, or a torque of 10,630 foot-pounds. At high gear, the torque normally developed on the wheel axle would

be 7,080 foot-pounds. Approximately 50-percent overload must be carried not only by the axles but also by the steering tie rods, or steering rams, and by the gearing itself. By mounting the brakes in the wheels, this stress is removed from the gear train, at least. However, over the years, no brake system has been designed that was free of the corrosive effects of sea water. The decision was finally made to mount the brakes inside the hull on the output shaft of the differential transmission. The brakes are of the aircraft type, with brake shoes bearing on a disc. The internal brakes have performed satisfactorily in every way. No problems of corrosion have occurred, and no locked brakes have been experienced. Heat generated by the brakes was questioned in the early design. Since the brakes dissipate heat to the air inside the hull, it was felt that severe overheating might occur. This has not been experienced in the tests of either of the LARC's or of the BARC. In these craft, the retardation of the engine alone or the engine plus the hydrotarder is sufficient to hold the LARCs so that the service brakes are seldom used except for the actual stopping.

FUTURE PROSPECTS

For many operations, speeds in excess of those possible for full displacement hulls are required. Possibilities of attaining these higher speeds will lie in the utilization of such types as planing hulls, hydrofoil-supported hulls, or possibly the ground-effects hull.

Some work has been done by the Ordnance and the Transportation Corps on planing hulls, which look promising. The Flying DUKW, referenced in the appendix, was developed by the Ordnance Corps, and it, too, may present a solution. In any final design, be it planing or hydrofoil-supported, the problem of wheel retraction must first be solved; to date, this has been the bottleneck to further development. Individual wheel drives would simplify the problem, and some work has been accomplished in this area; however, the weight of the wheel drives must be reduced over that presently available before great strides can be taken in speed.

REFERENCES

1. Army 2-1/2 Ton Amphibian Truck DUKW, Final Report, Sparkman and Stephens, Inc., New York, New York, for the Office of Scientific Research and Development, War Department, Washington, D.C., 7 November 1944.

2. Van Deusen, F. S., Colonel, "Trucks That Go Down to the Sea", Army Ordnance Magazine, November-December 1943.

3. Bekker, M. G., Theory of Land Locomotion, The University of Michigan Press, Ann Arbor, Michigan, 1956.

4. Terzaghi, K., and Peck, R. B., Soil Mechanics in Engineering Practice, First Edition, Seventh Printing, John Wiley and Sons, Inc., New York, New York, 1954.

5. Bekker, M. G., A Practical Outline of the Mechanics of Automotive Land Locomotion, Paper, Detroit Arsenal, Land Locomotion Research Laboratory, Center Line, Michigan, June 1955.

6. Knight, S. J., The Army Mobility Research Center Testing Facility, Paper, U. S. Army Engineer Waterways Experiment Station, Corps of Engineers, Vicksburg, Mississippi, 1959.

7. Manley, Murray E., An Analysis of Wheeled Amphibious Vehicle Design Problems, Paper, Southern California Section, Society of Naval Architects and Marine Engineers, Los Angeles, California, 12 April 1958.

8. Amphibious Vehicle Design Study, Minutes of Meeting, Stevens Institute of Technology, Hoboken, New Jersey, 9 December 1957.

9. Green, A. J., Jr., Deflection of Moving Tires, TR 3-516, A Pilot Study on a 12 x 22.5 Tubeless Tire, U. S. Army Engineer Waterways Experiment Station, Corps of Engineers, Vicksburg, Mississippi, July 1959.

10. Kerr, Richard C., Motor Vehicle Design Studies, Staff Report, Arabian American Oil Company, New York, New York, January 1955.

11. Kerr, Richard C., "Cut Cost and Increase Service Life of Off-the-Road Tires", Construction Equipment, Conover Mast Publication, July, August, September 1955.

12. Eklund, Karl F., The Influence of Load and Inflation on the Selection of Pneumatic Tires for Military Vehicles, Report 922, U. S. Army Engineer Research and Development Laboratories, Fort Belvoir, Virginia, 10 April 1945.

13. Foster, C. R., and Knight, S. J., A Review of Soil and Snow Trafficability, Paper, Presented at Interservice Vehicle Mobility Symposium at Stevens Institute of Technology, Hoboken, New Jersey, 18-20 April 1955.

14. Roach, C. D., Equation for Calculating the Resonance Frequencies of Four-Wheel Vehicles Without Spring Suspension, RTM 29, U.S. Army Transportation Research Command, Fort Eustis, Virginia, July 1959.

15. Timoshenko, S., Vibration Problems in Engineering, Third Edition, D. Van Nostrand Company, Inc., Princeton, New Jersey, 1955.

16. Heldt, P. M., The Automatic Chassis, P. M. Heldt, Nyack, New York, 1945.

17. Pocket Data for Human Factor Engineering, Report UB-1227-V-3, Vehicle Dynamics Department of Cornell Aeronautical Laboratory, Inc., Buffalo, New York, September 1958.

18. Quinn, B. E., DeVries, T. W. and Srinilta, S., "Determining Vehicle Frequency Response", Internal Working Paper, Purdue University, 1 March 1959.

19. Fabian, G. J., An Outline and Preliminary Analysis of the Basic Problems of Road Loading Mechanics, Report YM-1304-V-1, Cornell Aeronautical Laboratory, Inc., Vehicle Dynamics Department, Cornell University, Buffalo, New York, May 1959.

20. Kondner, R. L., and Edwards, R. J., Civil Engineering Department, Johns Hopkins University, The Static and Vibratory Cutting and Penetration of Soils, Paper, Presented to 1960 Annual Meeting, Highway Research Board, Washington, D. C., January 1960.

21. Quinn, B. E., and DeVries, T. W., Purdue University, Highway Characteristics as Related to Vehicle Performance, Paper, Presented to the 1960 Annual Meeting of the Highway Research Board, Washington, D. C., January 1960.

22. Surber, W. G., Jr., Turning and Maneuvering Test of Model 4722 Representing the Contract Design of the 5-Ton Amphibious Lighter LARC-5, Report 1304, David Taylor Model Basin, Washington, D. C., February 1959.

23. Rossell, H. E., and Chapman, L. B., Principles of Naval Architecture, Vol. II, The Society of Naval Architects and Marine Engineers, New York, New York, 1942.

APPENDIX

CHARACTERISTIC SHEETS FOR REPRESENTATIVE AMPHIBIANS

CHARACTERISTICS SHEET — CLASSIFICATION

TRUCK, AMPHIBIOUS, $2\frac{1}{2}$-TON, 6 x 6, DUKW

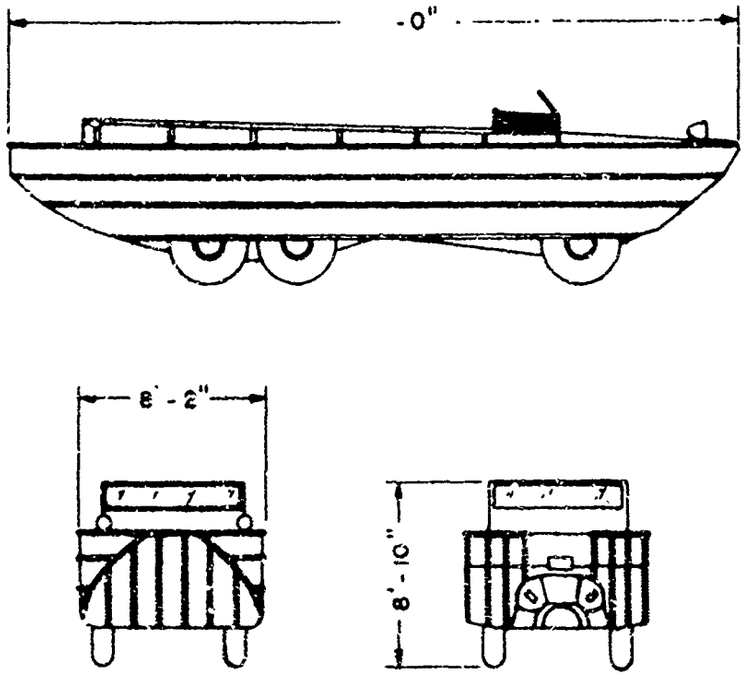

Designer and Builder:	GM
Over-all Dimensions:	
Length	31 ft. 0 in.
Width	8 ft. 2 in.
Height	8 ft. 10 in.
Wheelbase:	
Rear Wheel Spacing	
Cargo Space:	
Length	12 ft. 5 in.
Width	6 ft. 10 in.
Depth:	
Front	2 ft. 5 in.
Rear	2 ft. 3 in.
Weight (equipped):	14,880 lb.
Speed:	
Land	50 m.p.h.
Water	6 m.p.h.
Draft, loaded:	
Forward	3 ft. 6 in.
Aft	4 ft. 3 in.
Freeboard:	
Loaded	
Deck (bow)	24 in.
Deck (stern)	16 in.

contd.

CHARACTERISTICS SHEET	CLASSIFICATION

TRUCK, AMPHIBIOUS, 2½ - TON, 6 x 6, DUKW

Capacity:	
Difficult	5,000 lb.
Favorable	7,000 lb.
Ideal	9,000 lb.
Tires:	11:00 x 18, 10 ply
Tread, Center to Center Front:	5 ft. 3-5/8 in.
Ground Clearance:	
At hull	17-1/4 in.
At Front axle	11-1/4 in.
Fuel Capacity:	40 gal.
Power:	1 - 91.5 hp. gasoline @ 2,750 r.p.m.
Crew:	2
Passengers:	25
Construction:	Steel

CHARACTERISTICS SHEET — CLASSIFICATION

TRUCK, AMPHIBIOUS, 5-TON, 6 x 6, GULL

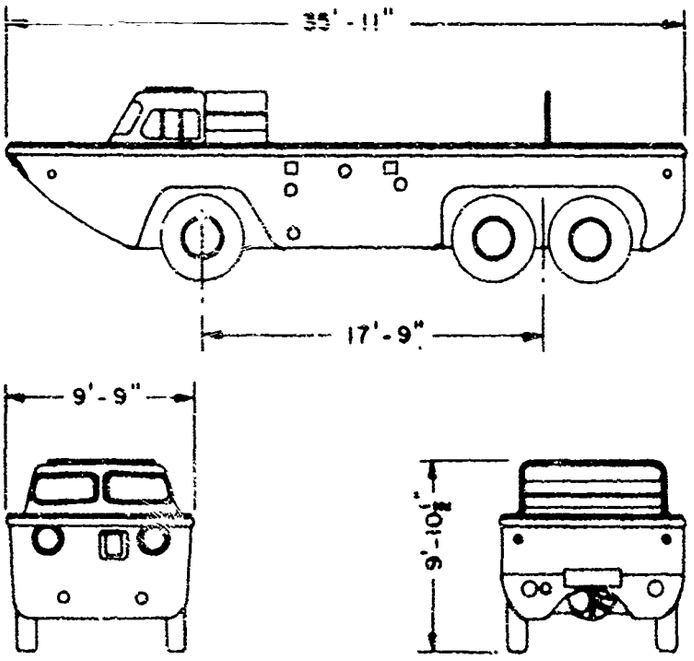

Manufacturer:	ACF Brill
Over-all Dimensions:	
Length	36 ft. 0 in.
Width	9 ft. 9 in.
Height	9 ft. 10-1/2 in.
Cargo Space:	
Inside Dimension	100 x 197 in.
Ground Clearance:	20-5/8 in.
Angle of Approach:	30°
Angle of Departure:	30°
Speed:	
Land (maximum)	63 m.p.h.
Water (maximum)	8 m.p.h.
Cruising Range:	
Land	360 mi.
Water	66 mi.
Engine:	
Make	Hall-Scott Model 485
Type	6 cylinder, in line
Cooling	liquid
Gross horsepower	300
Fuel:	140 gal.
Hull Material:	Plastic

CHARACTERISTICS SHEET	CLASSIFICATION

TRUCK, AMPHIBIOUS, DRAKE

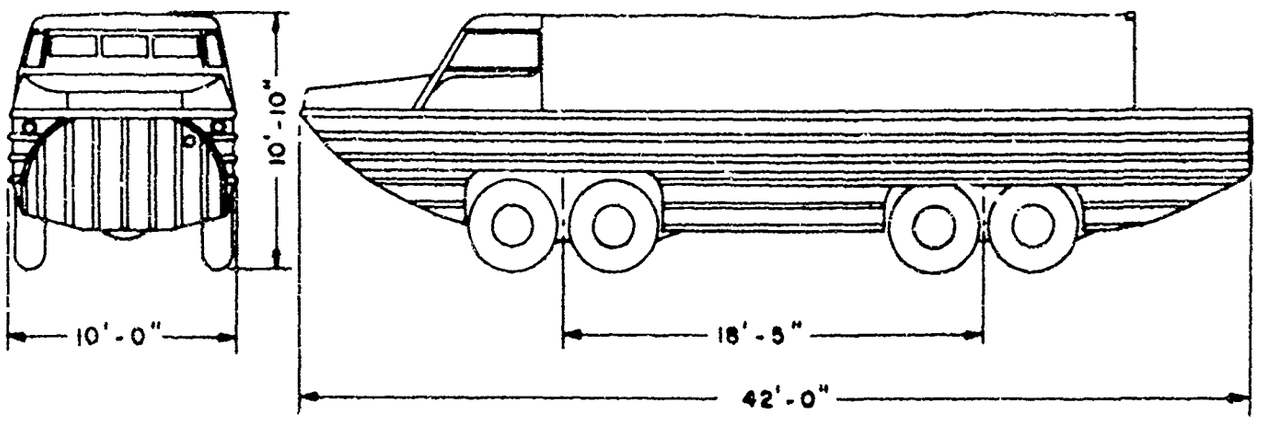

Designer:	GMC (Truck and Coach Division)
Builder:	GMC (Truck and Coach Division)
Over-all Dimensions:	
Length	42 ft. 0 in.
Width	10 in. 0 in.
Depth	10 ft.10 in.
Wheelbase:	18 ft. 5 in.
Cargo Space:	
Length	23 ft. 0 in.
Width	8 ft. 11 in.
To coaming	3 ft. 3 in.
To cargo bows	6 ft. 3 in.
Ground Clearance:	18 in.
Angle of Approach:	34 in.
Angle of Departure:	23 ft.
Weight, dry:	28,700 lb.
Fuel Capacity:	240 gal.
Steering Speed:	
Land	44 m.p.h.
Water	9 m.p.h.
Engine:	GMC, model 302
Power:	1.55 hp.
Tire Size:	48.6 O.D., 10 ply
Hull Material:	Steel

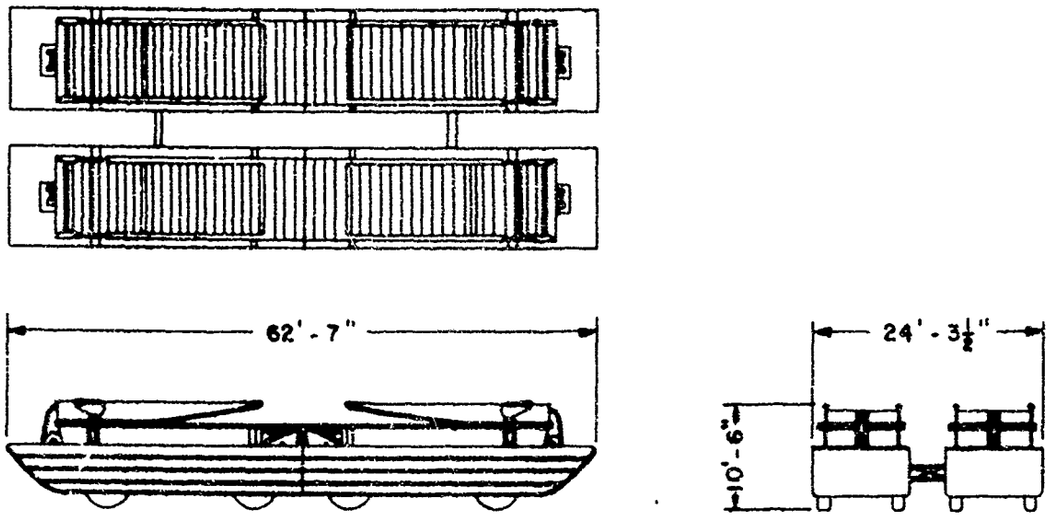

ASSEMBLED FERRY DIMENSIONS

Length Over Hulls:	62 ft. 7 in.
Length Over Extended Ramps:	105 ft. 1-3/4 in.
Width Over Hulls:	24 ft. 3-1/2 in.
Draft, Unladen:	15 in.
Draft, Laden (50-ton payload):	32 in.
Deck Width (inside curb):	13 ft. 0 in.
Deck Length (inside ramp hinges):	68 ft. 3-1/2 in.
Ramp Length (from hinge):	18 ft. 5-1/8 in.
Displacement:	
Unladen	87,200 lb.
Laden (50-ton payload)	187,200 lb.
Speed (rated in still water):	11 ft./sec.
Range (at rated load and rated speed):	3-1/2 hours or 25 miles

Continued

continued

4 x 4 TRUCK DIMENSIONS

Length, Over-all:	31 ft. 3-1/2 in.
Width, Over-all:	10 ft. 3-1/2 in.
Height:	10 ft. 6 in.
Wheel Base:	16 ft. 6 in.
Wheel Tread:	75 in.
Weight:	
Curb with fuel and crew	21,800 lb.
Speed:	
Highway, maximum	50 m.p.h.
Range:	
Highway (at 35 m.p.h.)	300 miles
Components:	
Engine	359 cu. in. Model 56 A V-8 Chrysler, 205 hp. at 4,000 r.p.m.

CHARACTERISTICS SHEET — CLASSIFICATION

TRUCK AMPHIBIOUS, 2-1/2 TON, 6 x 6, XM147E3 (SUPERDUWK)

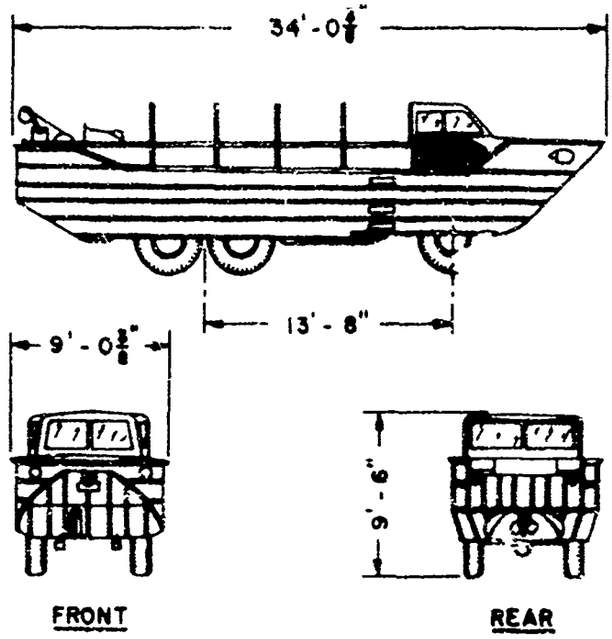

Manufacturer:	G. M. C.
Over-all Dimensions:	
Length	34 ft. 0-3/8 in.
Width	9 ft. 0-3/8 in.
Height	9 ft. 6 in.
Wheelbase	13 ft. 8 in.
Rear wheel spacing	4 ft. 0 .
Cargo Space:	
Length	15 ft. 2-3/4 in.
Width	7 ft. 5-1/4 in.
Depth	2 ft. 10 in.
Weight:	
Net vehicle	19,720 lb.
Payload	8,000 lb.
Maximum Speeds:	
Land	47 m.p.h.
Water	6.7 m.p.h.
Tread, Front and Rear:	5 ft. 11-3/4 in.
Ground Clearance:	13 in.
Angle of Approach:	40-1/2 degrees
Angle of Departure:	22-1/2 degrees
Mantle Height:	4 ft. 6 in.
Fuel Capacity:	108 gallons
Crew:	2
Brakes:	Air over hydraulic, disc type
Electrical System:	24 volt
Engine:	Model 302-56-148 hp.

continued

CHARACTERISTICS SHEET	CLASSIFICATION

TRUCK, AMPHIBIOUS, 2-1/2 TON, 6 x 6, XM147E3 (SUPERDUWK)

continued

Transmission:	6 Speed with Converter Ratios - 5.29; 3.81; 2.68; 1.93; 1.39; 1.00 -- Reverse 6.04 Converter Ratio - 2.8 at stall in 1st and 3rd Gears
Transfer Case Ratio:	Land - 1.82; Water - 1.00
Axle Ratio:	6.16
Suspension:	Leaf spring
Steering:	
Land	Recirculating ball type
Water	Rubber steer
Both	Power assisted
Water Propulsion:	Propeller, 3 blade 31-in. diameter, 25-in. pitch
Wheels:	20 x 7.5 in.
Tires:	12.50 x 20, 12 pr.
Hull Material:	Welded steel

CHARACTERISTICS SHEET	CLASSIFICATION

CARRIER, CARGO, AMPHIBIOUS, 60-TON, BARC

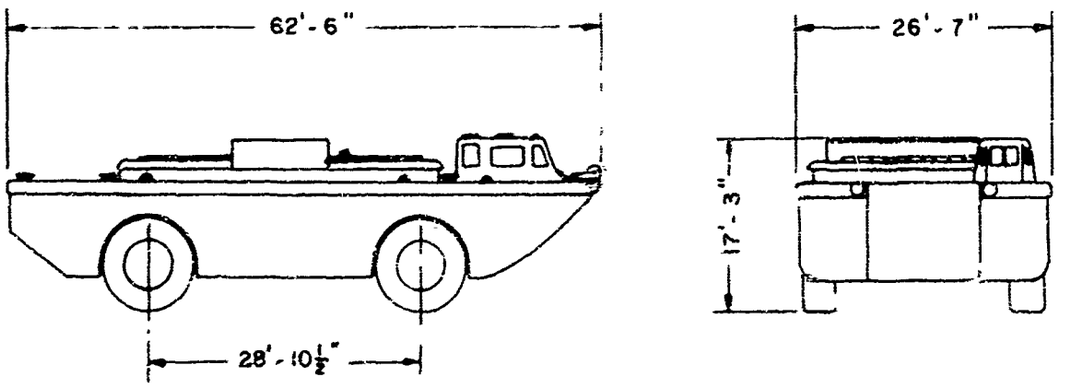

Designer & Builder (prototype):	Pacific Car and Foundry
Builder: (production models)	Treadway
Over-all Dimensions:	
Length	62 ft. 6 in.
Width	26 ft. 7 in.
Height	20 ft. 9 in.
reduced to ship	14 ft. 7 in.
Cargo Space:	
Length	38 ft. 3 in.
Width	14 ft. 0 in.
Height	
Forward	6 ft. 2 in. to main deck @ FR 3
Aft	4 ft. 6-1/2 in. to main deck
Free Board:	
Light	
Forward	7 ft. 2 in.
Aft	6 ft. 0 in.
Loaded	
Forward	5 ft. 5 in.
Aft	4 ft. 5 in.
Speed:	
Land Forward (maximum)	
Empty	15.2 m.p.h.
60-ton load	14 m.p.h
Water (maximum)	
Empty	7.5 m.p.h.
60-ton load	7.0 m.p.h.
Weight With Fuel:	198,500 lb.

contd.

CHARACTERISTICS SHEET	CLASSIFICATION
CARRIER, CARGO, AMPHIBIOUS, 60-TON, BARC	

Draft, Light:	
Forward	6 ft. 0 in.
Aft	7 ft. 2 in.
Draft, 60-Ton Load:	
Forward	7 ft. 4 in.
Aft	8 ft. 8 in.
Ground Clearance:	
Minimum	36 in.
With 60-ton load	28 in.
Turning Radius (on land):	75 ft 0 in.
Wheel Track (front and rear):	23 ft 2 in.
Tires, Tubeless:	36.00 x 41, 48 ply, nylon
Diameter:	9 ft. 6 in.
Wheels:	4 - each with independent drive
Steering:	Power steering all wheels, selective front and rear to permit "crabbing"
Operating Radius (with 60-ton load):	150 miles at 10 miles per hour
Power:	4 - 165 hp. diesel
Number of Propellers:	2 - twin screw, 3 blade, 46-in. dia.
Fuel Capacity:	600 gal.
Hydraulic Oil Capacity:	300 gal.

VEHICLE - AMPHIBIAN, LARK, 5-TON, TRECOM

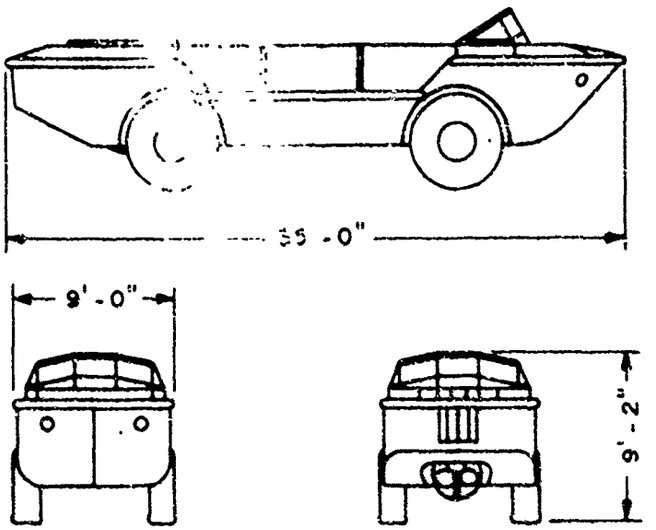

Designer:	Ingersoll, Borg Warner Corp.
Builder:	Ingersoll, Borg Warner Corp.
Length:	35 ft. 0 in.
Width:	9 ft. 0 in.
Height:	9 ft. 2 in. to top of cab
Wheel Base:	16 ft. 0 in.
Cargo Space:	16 ft. 0 in. x 7 ft. 0 in. x 29.44
Tread, Front and Rear:	7 ft. 3-3/4 in.
Ground Clearance:	23 in.
Angle of Approach:	31 degrees
Angle of Departure:	28 degrees
Fuel Capacity:	145 gallons
Crew:	2
Steering:	Land 4 wheel - full hydraulic; water - rudder

(CONT.)

CHARACTERISTICS SHEET	CLASSIFICATION

VEHICLE - AMPHIBIAN, LARK, 5-TON, TRECOM

(CONT.)

Water Propulsion:	30-in. dia., 30-in. pitch
Speed:	Land - 25; water - 10
Tire Size:	18.00 x 25, 12-ply rating
Power:	270 hp. at 3,200 r.p.m.
Hull Material:	Aluminum

CHARACTERISTICS SHEET	CLASSIFICATION

LIGHTER, AMPHIBIOUS, RESUPPLY, CARGO, 15-TON (LARC 15)

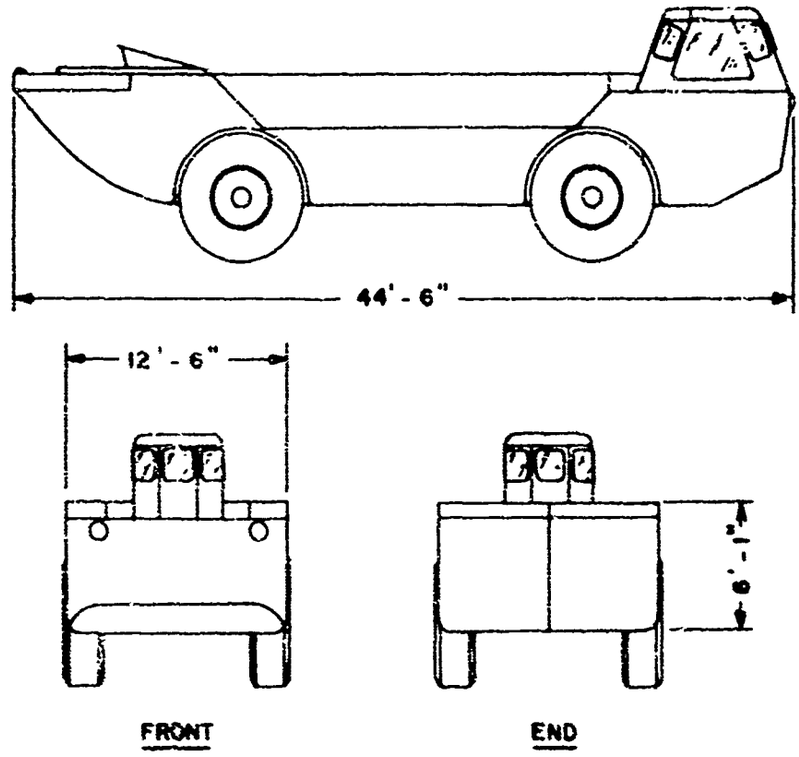

Builder:	Ingersoll Kalamazoo Division, Borg-Warner Corp., Kalamazoo, Michigan
Length, Over-all:	44 ft. 6 in.
Low Water Line:	41 ft. 4-1/2 in.
Beam:	12 ft. 6 in.
Draft to Keel:	5 ft. 1 in.
Depth to Keel:	6 ft. 1 in.
Displacement:	
Loaded	70,000 lb.
Light	40,000 lb.
Freeboard of Midships:	3 ft. 0 in.
Water Speed:	9.5 m.p.h.
Land Speed:	25 m.p.h.
Power:	Ford Model 534 N V-8 Gasoline, 270 hp. at 3,200 r.p.m. - engines, 2
Propeller:	4 Blades - 36 in. dia. x unknown pitch
Hull Construction:	Aluminum

CHARACTERISTICS SHEET	CLASSIFICATION

VEHICLE - AMPHIBIOUS TRUCK, 6 x 6, BAV (RUSSIAN)

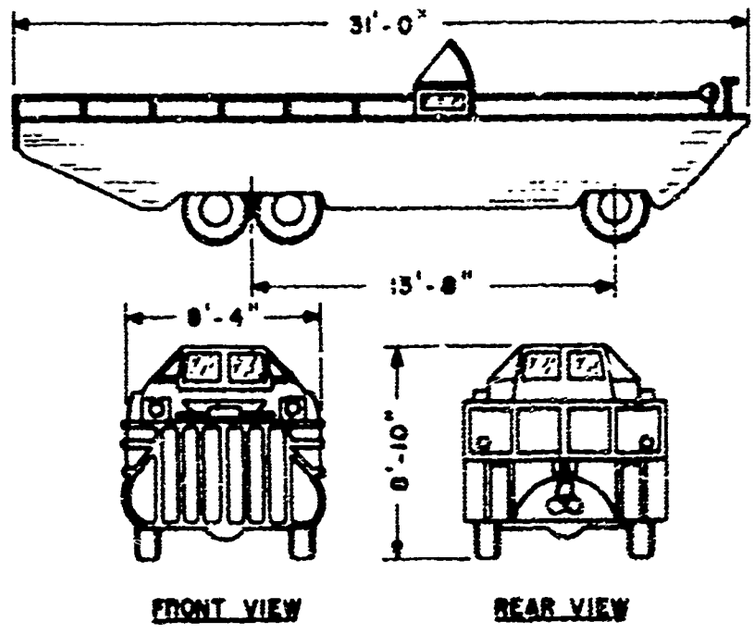

Weight:	7.5 tons
Personnel:	25
Payload:	2.5 tons
Wheelbase:	13 ft. 8 in.
Length, over-all:	31 ft. 0 in.
Height, over-all:	8 ft. 10 in.
Width, over-all:	8 ft. 4 in.
Ground Clearance:	11 in.
Engine type and horsepower:	Gasoline, 110 hp.
Max. road speed:	20-30 m.p.h.
Max. water speed:	65 m.p.h.
Cruising range:	300 mi.

NOTE: Comparable to DUKW

CHARACTERISTICS SHEET	CLASSIFICATION

VEHICLE - AMPHIBIOUS TRUCK, 4 x 4, GAZ - 46 (RUSSIAN)

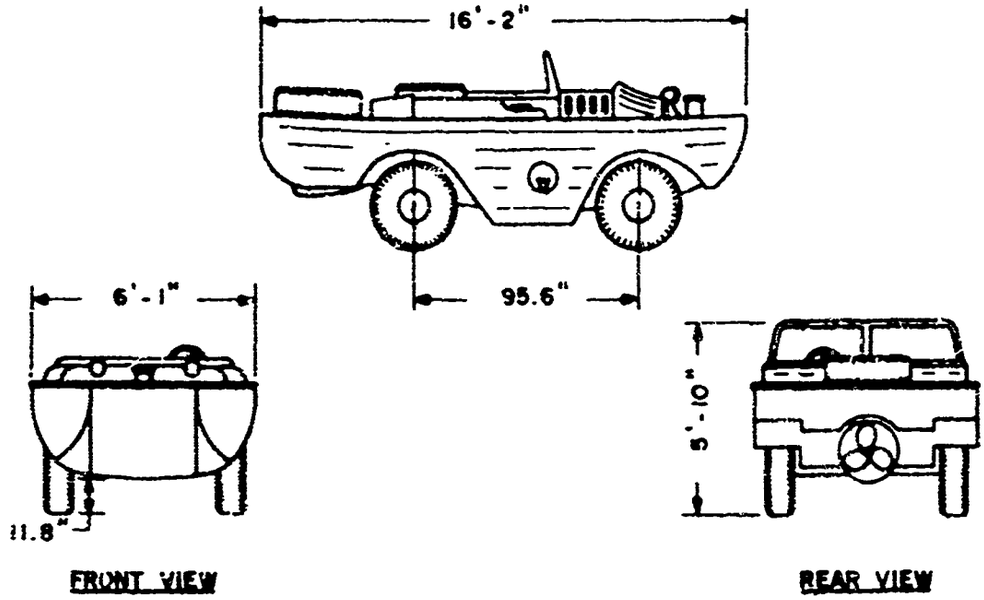

Weight:	3,847 lb.
Personnel load:	5 (including driver)
Wheel base:	95.6 in.
Length, over-all:	16 ft. 2 in.
Height, over-all:	5 ft. 10 in.
Width, over-all:	6 ft. 1 in.
Ground Clearance:	11.8 in.
Engine type and horsepower:	Gasoline, 55 hp. at 3600 r.p.m.
Max. road speed:	60 m.p.h
Max. water speed:	4-5 m.p.h.
Cruising range:	250 mi.

NOTE: Comparable to Amphibious Jeep

CHARACTERISTICS SHEET	CLASSIFICATION

LE BAC AMPHIBIE (FRENCH AMPHIBIE FERRY)

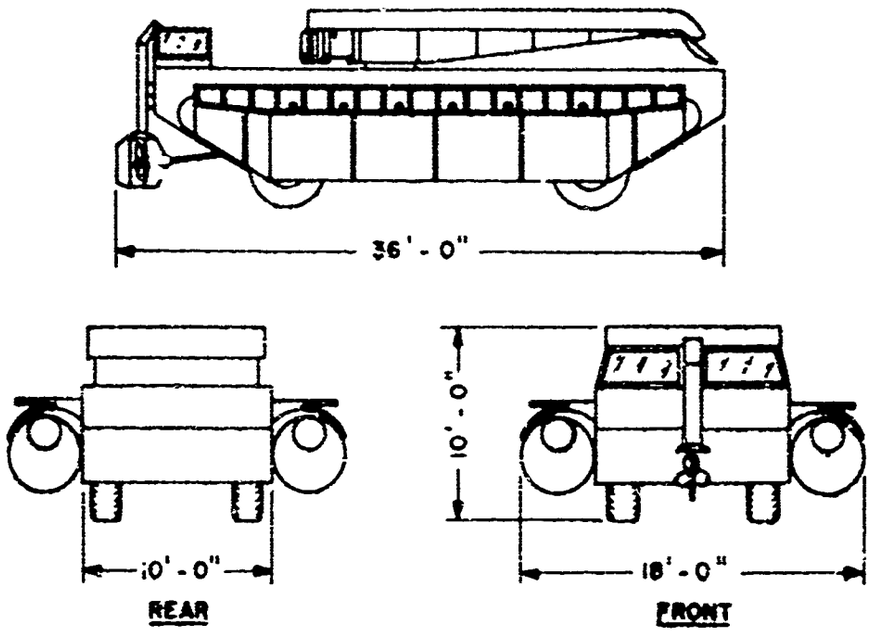

Weight:	24 short tons	NOTE: Similar to Carrier, Mobile Assault Ferry
Load Capacity:	Class 20	
Length:		
Ramp folded	36 ft. 0 in.	
Ramp extended	52 ft. 6 in.	
Width:		
Without floats	10 ft. 0 in.	
With inflated floats	18 ft. 0 in.	
Height:	10 ft. 0 in.	
Performance:		
Land	25 to 47 m.p.h.	
Water	9 m.p.h.	
Draft Loaded:	3.6 ft.	
Propeller Thrust:	4,400 lb. at 1,400 r.p.m.	
Winch Capacity:	11 short tons	
Engine:	Kaedble	
Make:	6 in line	
Type:	Diesel	
Fuel:	180 gal. at 1,600 r.p.m.	
Transmission:		
Gears	6 fwd, 1 reverse	
Gear ratio	0.829:1 - High	
	1.825:1 - Low	
Propeller:		
Type	3 blade	
Diameter	23.5 in.	

CHARACTERISTICS SHEET	CLASSIFICATION

DUKW (HYDROFOIL)

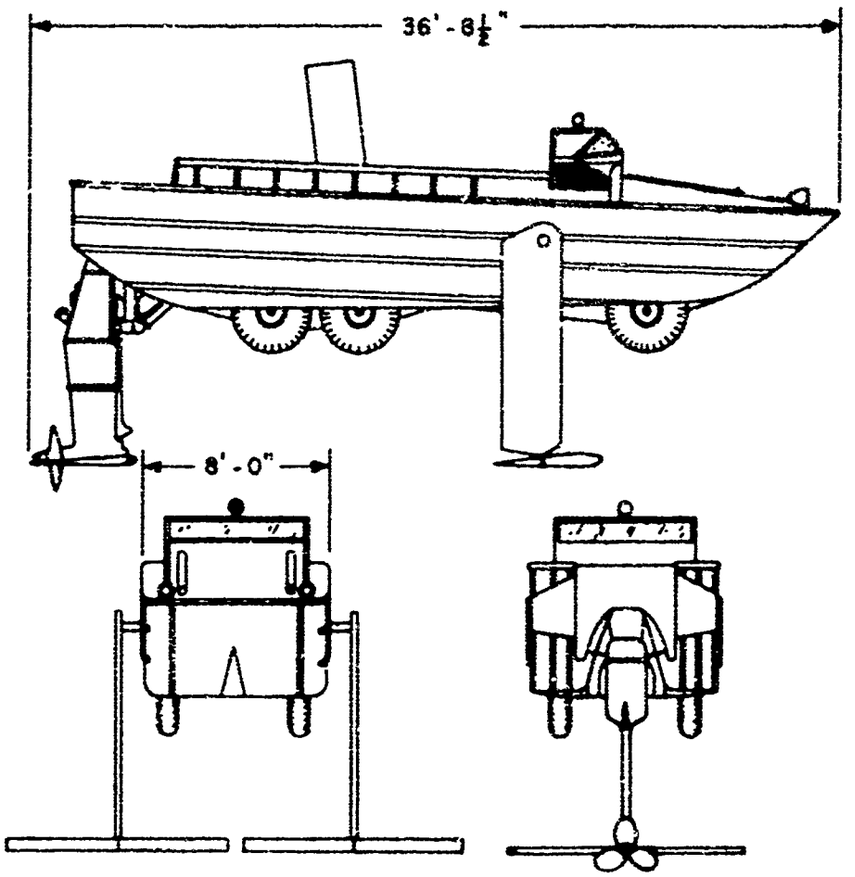

Builder:	Miami Shipbuilding Corporation
Foil Configuration:	Submerged
Control:	Automatic Pilot - Forward Foils Steering Powered Dynamic Rear Strut
Weight:	
Gross	26,000 lb.
Cargo	5,000 lb.
Length:	
Over-all	36 ft. 8-1/2 in.
Hull only	31 ft. 8-1/2 in.
Beam:	
Hull only	8 ft. 0 in.
Foils extended	12 ft. 4-1/2 in.
Draft:	
Hull only	5 ft. 7 in.
Foils extended	12 ft. 4-1/2 in.
Clearance:	28 in.
Power:	770 hp., T-53 Gas Turbine
Maximum Speed:	30 knots
Take-Off Speed:	13 knots

continued

CHARACTERISTICS SHEET	CLASSIFICATION
DUKW (HYDROFOIL)	

Continued

Fuel Capacity:	110 gal.
Endurance at Maximum Speed:	55 miles
Hull Construction:	Steel
Foil Material:	
Forward	6061-T6
Aft	6061-T6
Foil Section:	
Forward	23012
Aft	64, - 212
L/D at 25 Knots:	9.2