AD 6[illegible]

BRL TN 1610

BRL

AD

TECHNICAL NOTE NO. 1610

AN INBORE VELOCITY MEASURING PROBE SYSTEM FOR LARGE CALIBER GUNS

by

Walter F. Braun

April 1966

Distribution of this document is unlimited.

CLEARINGHOUSE
FOR FEDERAL SCIENTIFIC AND
TECHNICAL INFORMATION

Hardcopy	Microfiche		
$ 2.00	$ .50	27 pp	

ARCHIVE COPY

U. S. ARMY MATERIEL COMMAND
BALLISTIC RESEARCH LABORATORIES
ABERDEEN PROVING GROUND, MARYLAND

Destroy this report when it is no longer needed.
Do not return it to the originator.

The findings in this report are not to be construed as an official Department of the Army position, unless so designated by other authorized documents.

B A L L I S T I C R E S E A R C H L A B O R A T O R I E S

TECHNICAL NOTE NO. 1610

APRIL 1966

Distribution of this document is unlimited.

AN INBORE VELOCITY MEASURING PROBE SYSTEM FOR LARGE CALIBER GUNS

Walter F. Braun

Exterior Ballistics Laboratory

RDT&E Project No. 1P014501A33D

A B E R D E E N P R O V I N G G R O U N D, M A R Y L A N D

B A L L I S T I C R E S E A R C H L A B O R A T O R I E S

TECHNICAL NOTE NO. 1610

WFBraun/sjw
Aberdeen Proving Ground, Md.
April 1966

AN INBORE VELOCITY MEASURING PROBE SYSTEM FOR LARGE CALIBER GUNS

ABSTRACT

A dsecription of an inbore velocity measuring technique using contact switches is given. Reliability and accuracy requirements are discussed and typical field results are given.

TABLE OF CONTENTS

		Page
	ABSTRACT	3
1.	INTRODUCTION	7
2.	DESCRIPTION OF AN INBORE VELOCITY MEASURING PROBE SYSTEM	9
	2.1 Mechanical Features of the System	9
	2.2 Electronic Instrumentation	17
3.	ACCURACY REQUIREMENTS	17
4.	PROBLEM AREAS AND SYSTEM RELIABILITY	18
	4.1 Shock Waves in the Launch Tube	19
	4.2 Leakage of Powder Gases Past the Sabot	19
	4.3 High Contact Resistance of the Probe Switch	20
	4.4 Poor Dimension Control of the Front Surface of the Sabot	20
	4.5 Electronic Problems	21
5.	RESULTS	21
	5.1 Seven Inch HARP Gun	22
	5.2 Sixteen Inch HARP Gun	22
	5.3 Five Inch HARP Gun, Fired at Wallops Island	23
6.	CONCLUSIONS	25
	REFERENCES	26
	DISTRIBUTION LIST	27

1. INTRODUCTION

The measurement of muzzle velocity of saboted projectiles launched from large caliber guns at elevations greater than 70 degrees is difficult because of problems in the placement and operation of conventional velocity measuring equipment. In the current High Altitude Research Project (HARP),[1-4*] for example, the muzzle of the 75 caliber 16-inch gun (Figure 1) at 85 degrees elevation is over 100 feet high. This is a formidable height from which to obtain accurate time-position data. Moreover, HARP firings are conducted over a wide range of weather conditions, seasons, geographic locations, and times of day. Weather conditions vary from 100 degrees in the shade in the tropics to below freezing temperatures in the arctic, and from a clear dry day to a condition where the firings are scheduled between successive line squalls. It is important that the data be available immediately after firing, since the velocity information is sometimes required for planning the next round.

Consideration has been given to adapting some of the standard velocity measuring techniques to meet the conditions imposed by the HARP guns. Some of the more obvious disadvantages of these techniques are listed:

a. The Solenoid Chronograph System would require the construction of a high tower to support a cage-like structure used to position the coils along the projectile's trajectory. Such a tower, approximately 200 feet high and of adequate strength to withstand the muzzle blast and the natural environment, would be very expensive. There would also be a high probability that the sabot parts would strike the coils or supporting structure. Damage to the coils and structure would create a formidable maintenance problem.

b. With smear camera techniques the requirements for a long focal length lens, for a precise knowledge of the magnification factor of the camera system, for precise control of the film speed under adverse field conditions, and for adequate auxilliary illumination in poor weather and at

---

* *Superscript numbers denote references which may be found on page 26.*

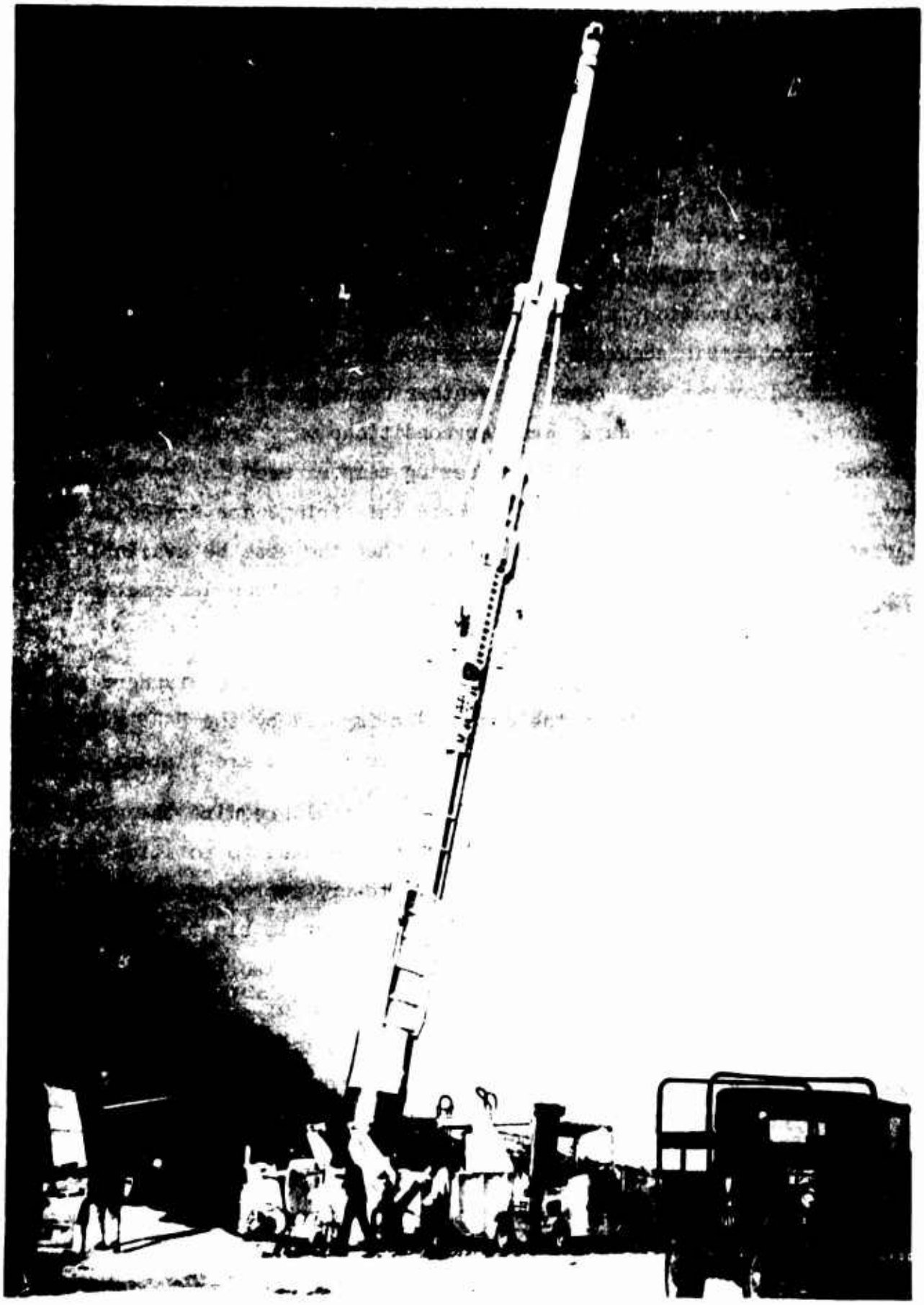

FIG. 1 - The 16-inch HARP Gun at Barbados, W. I.

night, impose too many difficulties. In addition, the velocity measurement would not be immediately available; it could only be obtained after developing and reading the film.

c. Doppler radar velocimeters have worked more or less satisfactorily with the 5-inch HARP gun (Figure 2). However, the radar must operate through a region of expanding powder gases and ionized flame within which is an array of sabot parts often equivalent in mass to that of the missile (Figure 3). The cumulative effects of these disturbances tend to cause the radar to lose track of the missile. Also, the Doppler velocimeter is weather sensitive and may not produce good data under adverse weather conditions.

This report discusses an attractive alternate to these conventional velocity measuring techniques: the inbore velocity probe.

2. DESCRIPTION OF AN INBORE VELOCITY MEASURING PROBE SYSTEM

The proposed technique for establishing distance-time data for the projectile involves inserting a set of contact type probes into the wall of the gun tube. Each probe acts as a mechanical switch the contacts of which are closed as the leading edge of the projectile or sabot deforms the probe. Distance data are obtained from the measurements of the positions of the probe holes in the gun tube. The transient voltages generated by closing the switches are used to activate the stop gates of a group of time interval counters that have been started simultaneously at time T minus zero.

2.1 Mechanical Features of the System

The discussion of the mechanical instrumentation concerns the probe design and modifications to the gun tube. Two types of probes were developed. Both types will be described, although type 1 is no longer used in the HARP guns.

The first HARP gun to use this velocity measuring system was the 5-inch gun. The muzzle velocity was approximately 5000 ft/sec. Probe type 1 was designed for this gun system (Figure 4). A six inch base line was selected, so that distance tolerances of not greater than $\pm$ 0.03 inches

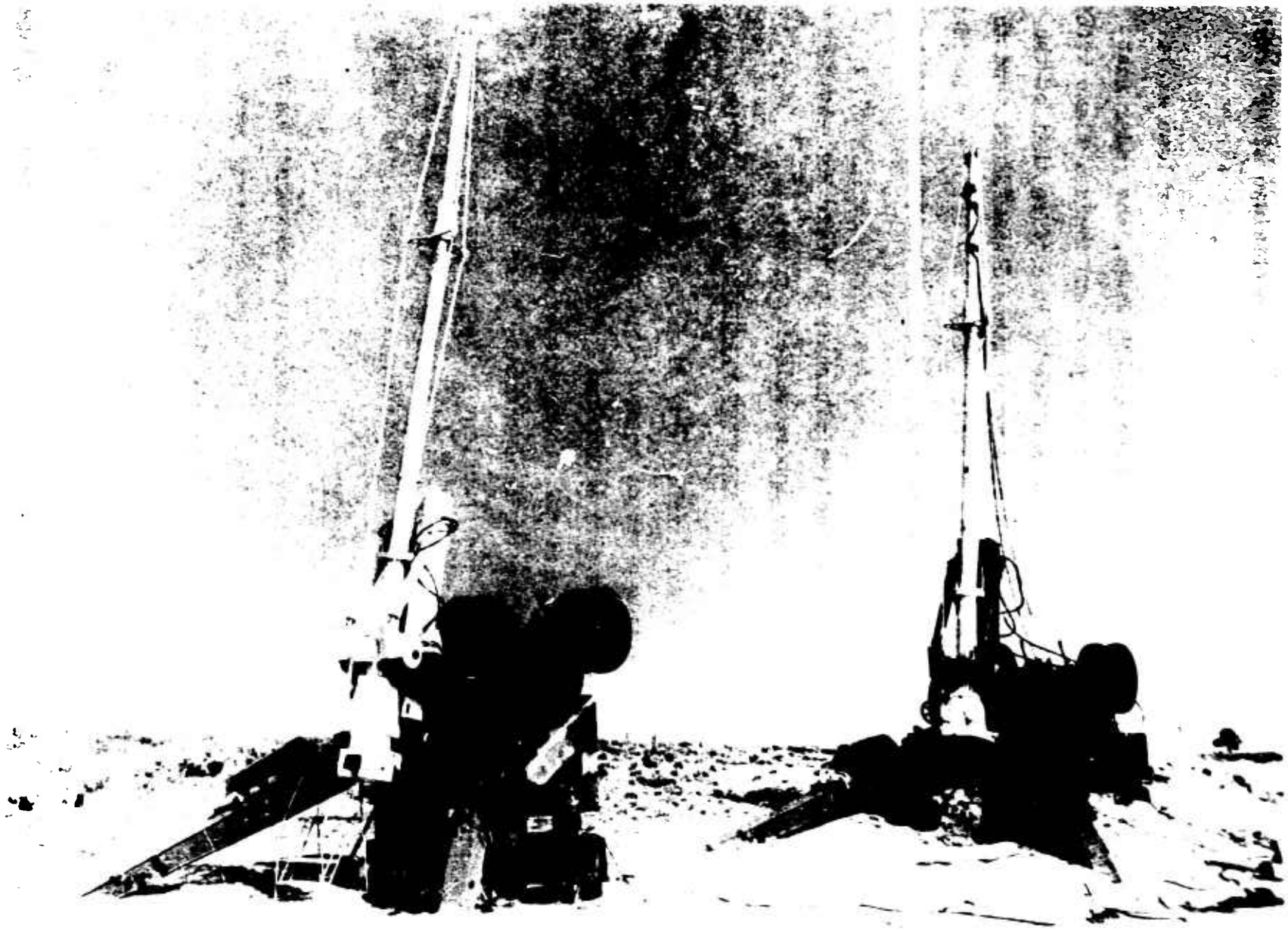

FIG. 2 - A pair of 5-inch HARP Guns in Battery at Wallops Island, Va.

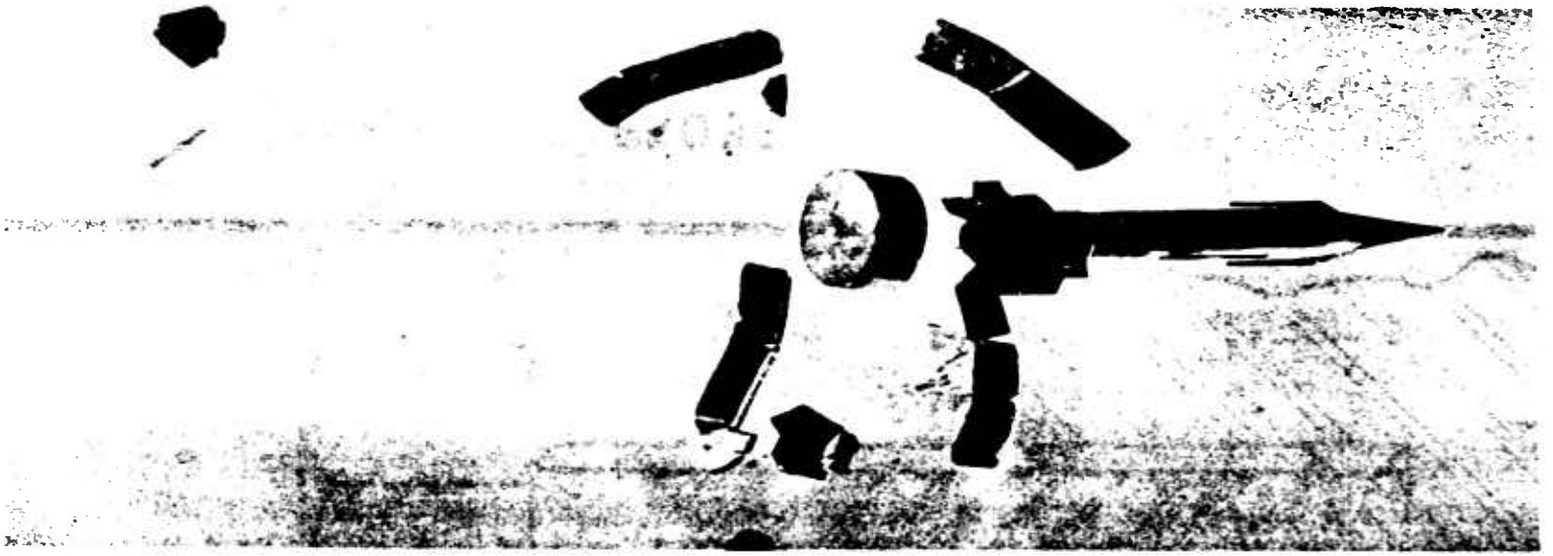

Round 11, Distance from the Muzzle, 180 feet.

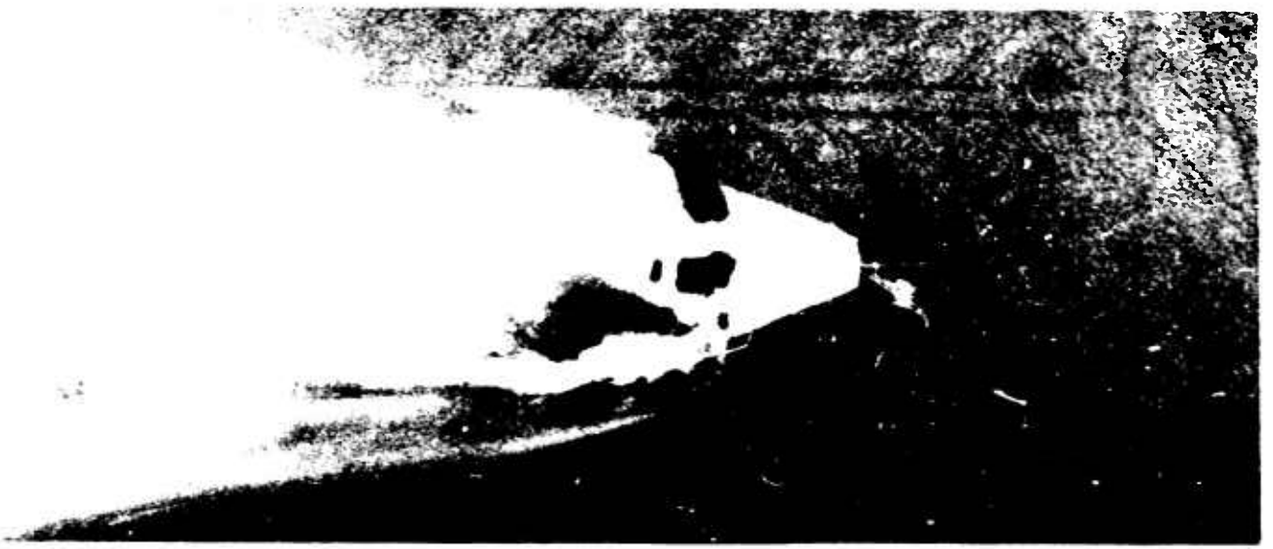

Round Crystal, Distance from the Muzzle, 120 feet.

FIG. 3 - Smear Photographs of 16-inch HARP Missiles

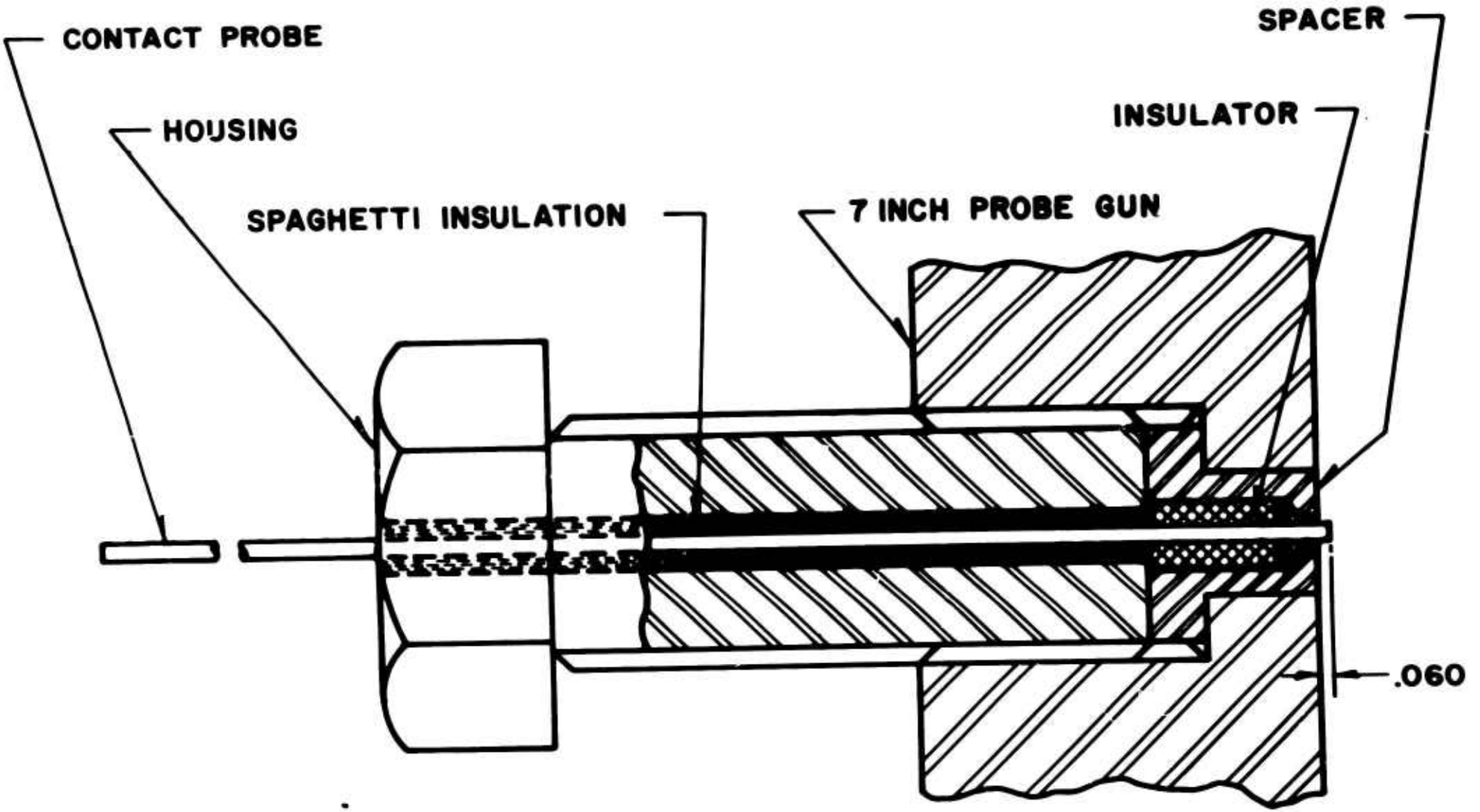

PROBE TYPE I

FIG. 4

were required to obtain an accuracy within ± 1 percent. (All of the HARP guns have used smooth bore type tubes.) Data obtained with this type of probe were less satisfactory as the velocity of the round was increased. Some probe switches would close early, that is, before the round arrived. There was definite evidence that closure occurred somewhere in the region between the shock wave and the front edge of the round. It is suspected that this type of malfunction is caused by some phenomena associated with either the shock wave in the launch tube or powder gases jetting past the missile when obturation failure occurs.

To improve reliability, Velocity Probe type 2 (Figure 5) was designed. The length of the base line was increased, and the probe holes were relocated. The holes were now in groups of two or three on opposite sides of the gun tube. Figure 6 shows the latest modifications to the launch tube. All probes are inspected by X-ray photography (Figure 7) before use. The cost of the probes has varied between $1.30 and $2.00 each for lots of 500.

After every round the deformed probe must be replaced. On the 16-inch gun it is a simple matter to crawl inside the gun and drive the probes out with a light blow of a hammer on a drift pin. For smaller guns the following technique has been used:

a. Remove retainer bolt (Figure 6).
b. Pull out contact drill rod (Figure 5) with pliers.
c. If plastic insert does not come out with the wire, drill it out.
d. Insert "Easy-out" into the brass housing, twist and pull.

For the 5 and 7-inch guns the probes have been replaced while the gun is in elevated position. This operation has been done from the bucket of a High Ranger (Cherry-picker). The 16-inch gun is depressed for loading the round. Probes are changed at this time. It takes from 5 to 10 minutes to complete the operation.

When the gun is being fired and the probes are not being used, the probe holes should be plugged. Excessive erosion of the gun tube on the muzzle side of the holes will occur if the holes are not properly closed.

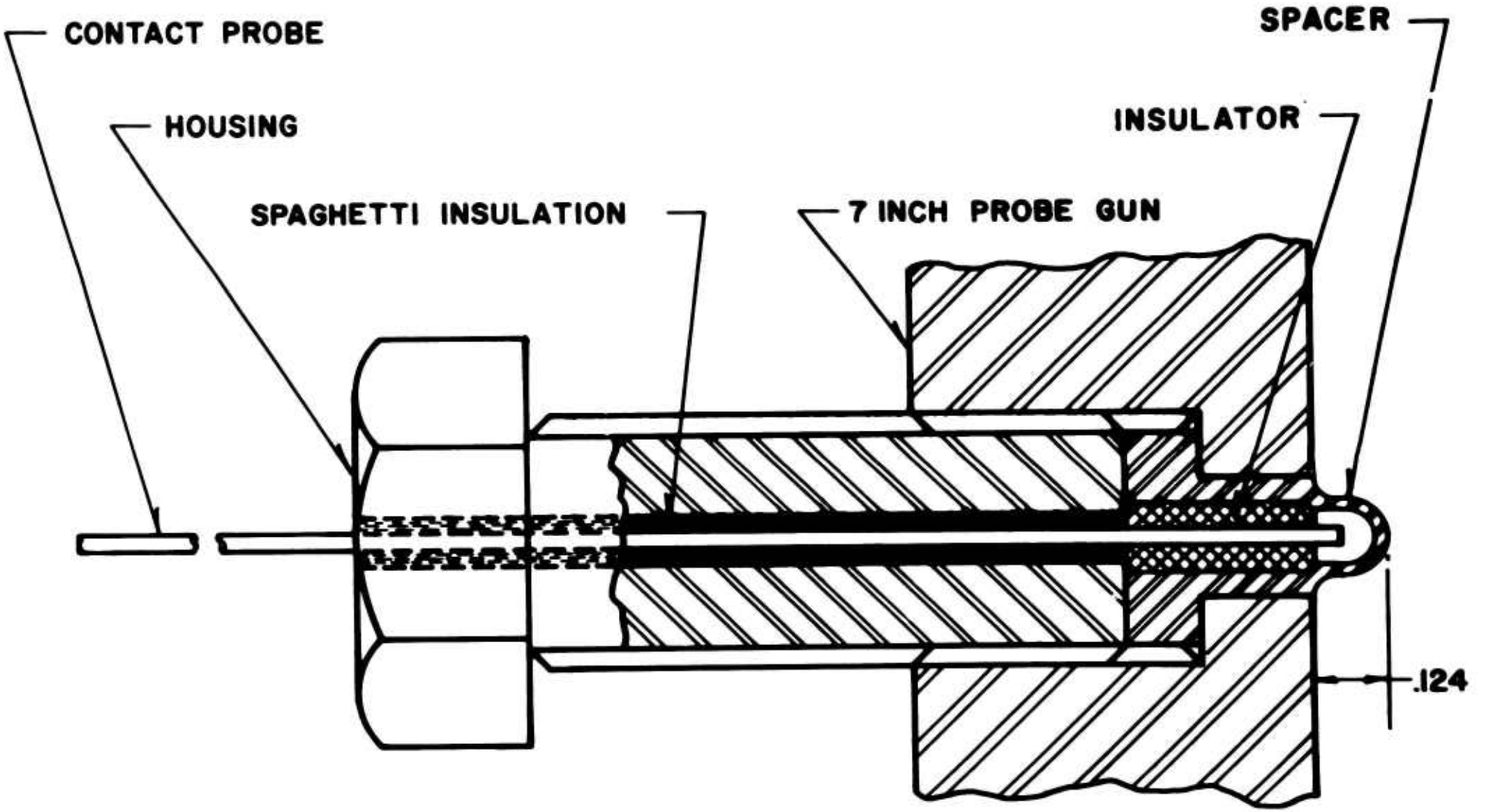

PROBE TYPE II

FIG. 5

LOCATION OF VELOCITY PROBE HOLES-16" GUN

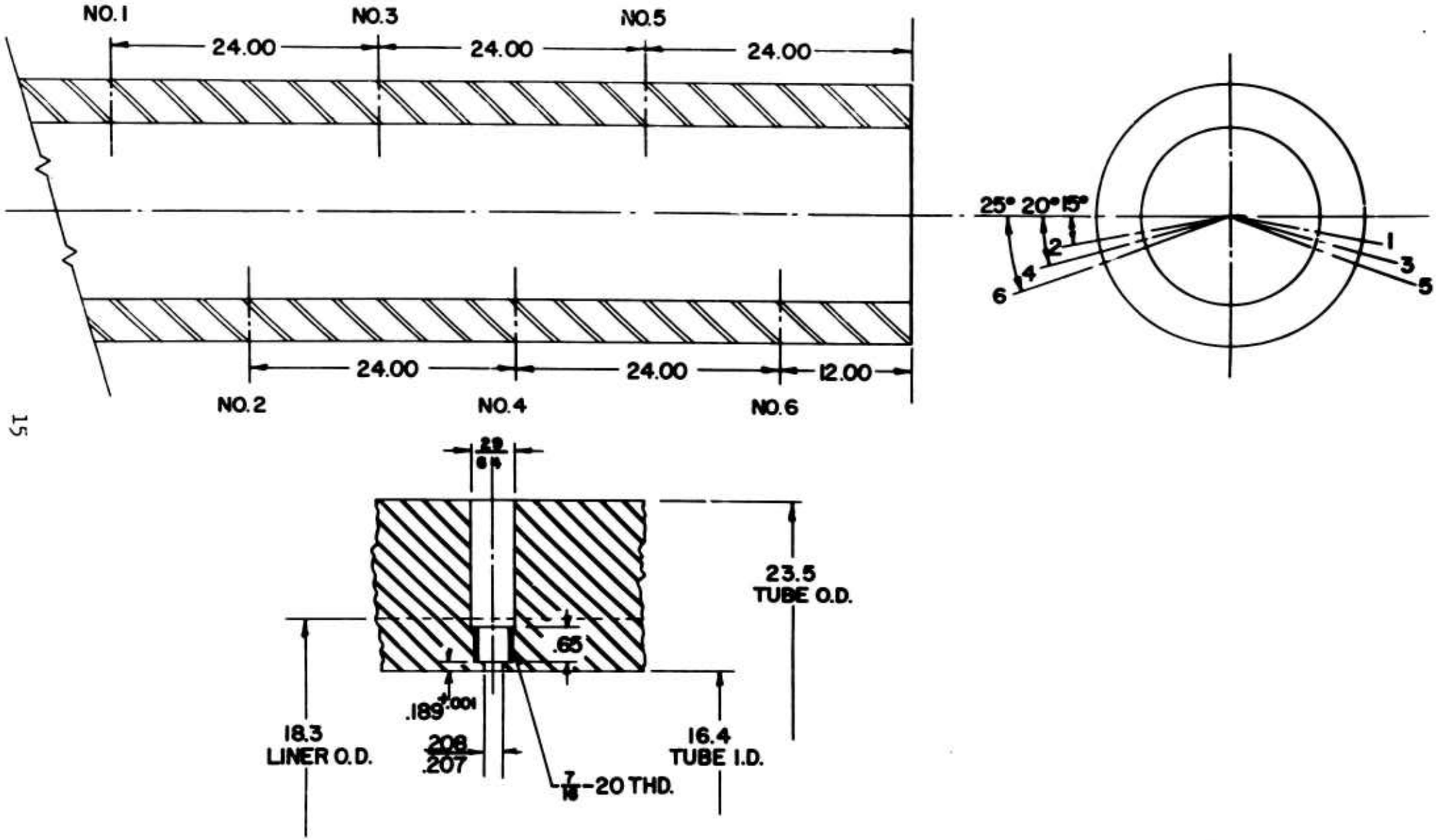

FIG. 6

FIG. 7 X-RAY OF THE PROBE SWITCH

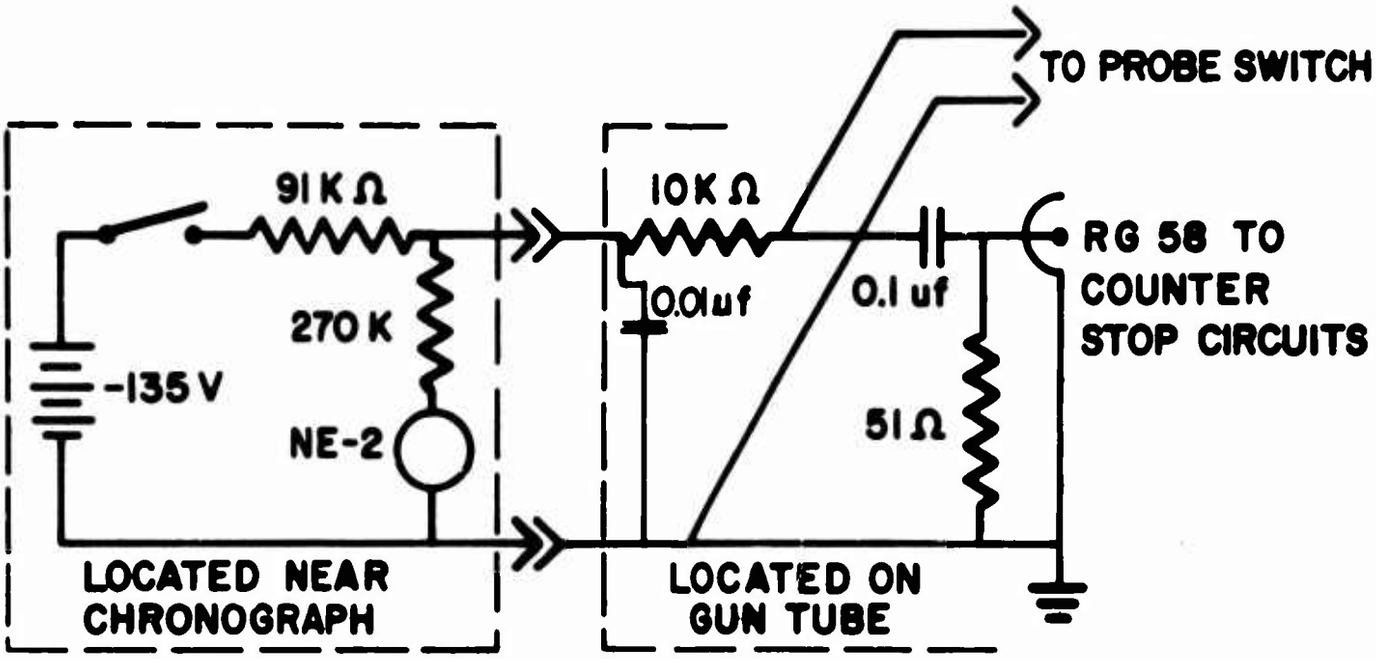

FIG. 8 PROBE CIRCUIT

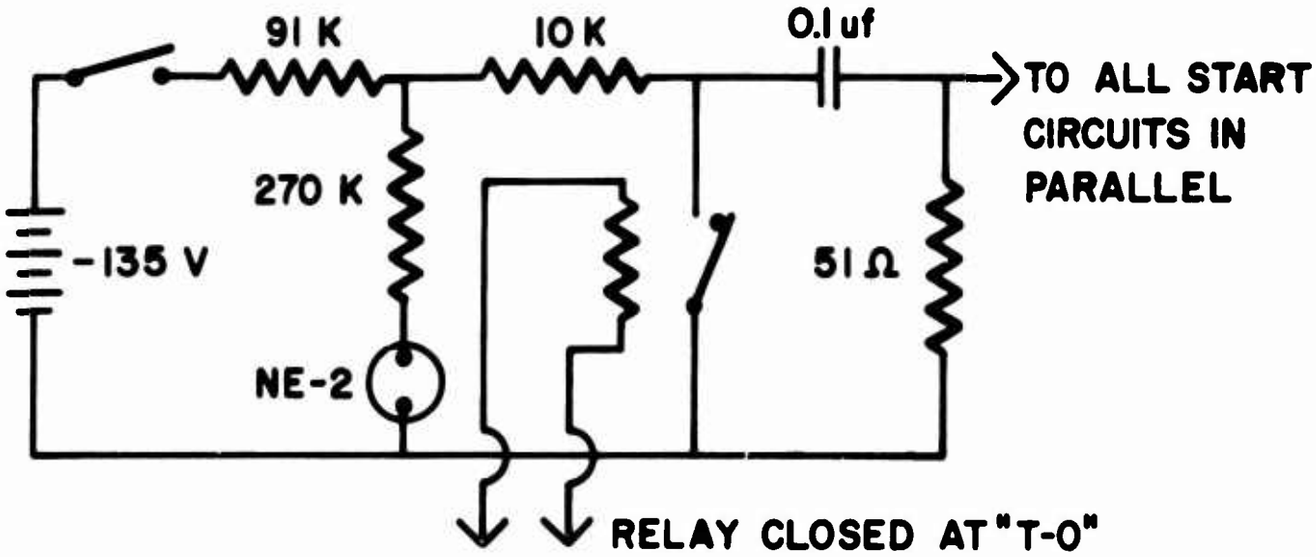

FIG. 9 START CIRCUIT FOR PROBE COUNTERS

With proper operation, the use of the probes should not cause excessive wear of the gun tube.

2.2 Electronic Instrumentation

The availability of 100 and 10 megacycle time interval counters, with low threshhold voltages and low input impedances, which are designed to accept pulses with fast rise times simplifies the problem of developing the time-position pulse. A typical specification for a counter with 10 nanosecond resolution has a minimum trigger pulse requirement of 3 volts peak, 0.5 volt/nanosec rise time, 5 nanosec pulse width, and an input impedance of 50 ohms. The 10 megacycle counter has less critical requirements. The circuits used to meet these requirements are shown in Figure 8. The observed rise time, using 100 feet of RG 58U cable and recording on the Tektronix 545 oscilloscope, is approximately 1 volt/nanosec and the potential reaches 70 volts in less than 100 nanosec. Threshold voltage is reached in less than 10 nanosec. To avoid difficulties from cross talk between lines and from spurious signals that may be generated by a wide variety of equipment used on the same test, the circuits were completely isolated and batteries were used as a power source. Counters are started simultaneously in parallel at ignition time of the gun, T-0. The circuit used to start the counters (Figure 9) is the same as a probe circuit except that the probe switch is replaced by the contacts of a relay that is energized at T-0. The probes produce only the stop pulses. To avoid any errors due to signal transmission time over the lines, coaxial cables are all cut to the same length. The neon glow lights indicate that the probe wires are not shorted. This set-up is stable in standby condition and remains operative without attention during occasional "holds".

3. ACCURACY REQUIREMENTS

The selection of equipment, length of base line and electronic circuitry is predicated on reliability and accuracy requirements. Muzzle velocity data should be accurate to within $\pm$ 1 percent to be useful in data analysis of high altitude research. A 1 percent difference in muzzle velocity may give a 10,000 foot variation in apogee. If equal percentage

errors are allocated to distance and time, then each must be accurate to within ± 1/2 percent. Although both 100 and 10 megacycle counters have been used, the instrumentation was planned for the latter. Thus the minimum time base for 99.5 percent accuracy would be 200 times the resolution of the counter or 20 microseconds. The minimum base line at a typical velocity of 5000 ft/sec would be 1.2 inches; this length baseline would require locating both the mechanical switches and the active surface of the sabot face that closes the switches to tolerances of 0.006 inch. While this tolerance should not be considered difficult in machine shop practice, longer base lines were selected to permit larger tolerances, particularily for that part of the sabot that deforms the switch. It is not only necessary to hold this tolerance in the lathe but also after the missile and sabot have traveled 50 to 100 feet in the gun tube under pressures that accelerate them to 5000 ft/sec. Therefore the baseline was increased by a factor of five; i.e., to six inches.

The baseline was later increased to nine inches on the 5 and 7-inch guns. For the 16-inch gun, a two foot baseline was used, partially because the sabots were made from plywood and it was felt that tolerances of 1/8 inch might be more reasonable. Under these conditions, the distance error is 3 to 10 times the time error.

4. PROBLEM AREAS AND SYSTEM RELIABILITY

The probe method for measuring velocities in the bore of the gun has been used with varying degrees of success by previous experimenters, some of whom have recorded the details of their techniques and experiences (Reference 5). Various explanations have been given why this simple device, presumably foolproof, fails to provide velocity data consistently.

A discussion of some possible causes of failure and comments on how these causes may apply to HARP guns will be given in this section. Corrective measures and modifications of techniques that were made to improve reliability will also be discussed.

4.1 Shock Waves in the Launch Tube

The motion of the projectile in the launch tube creates a disturbance in the fluid ahead of the projectile. A shock wave is propagated and the Mach number of the flow is dependent on projectile velocity. At low velocities, below 4000 ft/sec, this shock has not presented any problems. At high velocities, both electrical and mechanical problems do exist. The fluid in the region between the projectile and the shock front is at a high temperature and in an ionized state. This ionized gas may initiate current flow across any open switch type probe located in the flow. The mechanical problem arises from the possibility that the central wire of probe type 1 may be pushed against the ground point. In either case, a voltage transient is generated that does not define a known location of the missile in the launch tube within the required tolerances. The adverse effects of the shock waves have been observed experimentally at velocities above 6000 ft/sec, although the experiments did not actually show whether the transient voltage associated with the shock was developed by an electrical or mechanical shorting of the probe. The precise velocity at which the shock wave begins to be a problem is not well defined, but the effects depend on the precautions taken by the operator. Some techniques used to improve reliability of operation under adverse conditions due to strong shock formation are: using low voltages with low impedance circuits and high currents in developing the voltage transient; coating the probes with silicone grease; evacuating the launch tube; and using a completely covered probe such as probe type 2.

4.2 Leakage of Powder Gases Past the Sabot

Poor obturation due to inadequacy of or damage to the gas seal permits the high temperature powder gases to blow by the sabot, eroding some of the sabot material. These sabot particles, as chunks of metal, plywood, plastic, rubber and vaporized metal, are carried ahead of the projectile by the high velocity jet of powder gases. This can cause premature development of the voltage transient from either electrical or mechanical shorting of the probe switch. Probe type 2, (Figure 5), which is completely inclosed, is obviously less subject to problems of this type.

4.3 High Contact Resistance of the Probe Switch

Oscillograph measurements have shown that the contact resistance of the closed switch is negligible. However, even under adverse conditions, if it were as high as 50 ohms the transient voltage would still reach the threshold level of the counters within the resolution time. One precaution taken to keep the contact resistance low was to design the probe so that the contact surfaces were replaced after each round. This feature was incorporated in probe types 1 and 2.

4.4 Poor Dimension Control of the Front Surface of the Sabot

The active surface area of the sabot used in closing the probe switch is a ring, with an outer diameter equal to the bore diameter of the launch tube and a width equal to the insertion depth of the probe in the gun tube. The plane of the ring surface should be normal to the motion of the projectile. Some spin may be imparted to the sabot and it is not possible to predict exactly where on the sabot ring surface the impacts of the probes will occur.

In the 16-inch gun, a two foot base line is used for the velocity measurement. Thus, for 99.5 percent accuracy, those surfaces on the sabot that deform the probes must lie within $\pm$ 1/8 inch of the ring area which in turn must be normal to the motion of the missile to within 1/2 degree. Tolerances as liberal as these should be held with ease even though sabots are manufactured from plywood. However, the sabots are in four or six parts and any axial shifting can negate the efforts of the machinist. Not only must the tolerances be held in manufacture and loading, but also after the missile has traversed 100 ft of launch tube and attained velocities in excess of 5000 ft/sec.

Irregularities in the gun tube can broach grooves in the sabot at the switch contact area. Balloting of the missile package in the tube can cause uneven wear on the front of the sabot. Some recovered pusher plates have been worn asymmetrically, indicating tilting of several degrees. Data obtained subsequent to a round that broke up in the gun always show poor consistency.

A round that breaks up in the gun barrel during the launch often gouges holes and raises burrs which can broach slots in the sabots of subsequent rounds. A partial remedy for this condition is to increase the probe depth and refinish the bore of the gun. However, success in measuring velocity depends mainly on the proper functioning of the sabot.

4.5 Electronic Problems

Inoperative counters, broken cables, loose connections, all contribute to failure. All of these causes of failure to obtain satisfactory data have been observed and identified at some time in the firings of various type guns, though in some cases the evidence might be considered circumstantial. Even though the instrumentation shack is less than 150 feet from the muzzle of the 16-inch gun, the muzzle blast has presented no real problems. The only solution to the other electrical problems is to have a redundancy of equipment and a program of periodic testing. The counters are checked by providing parallel start and stop pulse to all counters and checking an arbitrary but equal time interval reading on all units.

5. RESULTS

Probe velocity measurements on some firing programs have had a deviation of less than 0.5 percent from the mean value. There were not too many opportunities to check data against velocity measurements obtained from a ballistic range or other precision facility. Velocities obtained from range data and computed back to the muzzle are slightly higher than the probe velocities. Some small acceleration is given to the missile in the region just ahead of the muzzle. Another check on accuracy is provided by the Doppler radar, which obtains data some 200 to 300 feet from the muzzle. A third check can be obtained by computing the muzzle velocity necessary to reach an apogee computed from data obtained from the M-19 radar altitude plots. Results from various firings are listed on the following page.

5.1 Seven-Inch HARP Gun

Date: May 1964

Velocity Probe Base Line: 9 inches

Velocity Probe Type : 1.

Rd. No.	Probe Intervals 1 - 2	2 - 3	3 - 4	Note
6864	1717 ft/sec	1733 ft/sec	1744 ft/sec	
6865	2678 ft/sec	2695 ft/sec	2714 ft/sec	
6866	3501 ft/sec	---- 3524 ft/sec	------	Vel. #2 to #4
6867	------	4335 ft/sec	4380 ft/sec	
6868	4351 ft/sec	4359 ft/sec	4386 ft/sec	

For this shoot, no corroborating data were available. The increase in velocity shown would be expected from an acceleration of the range of 1000 to 2000 g. This is not incompatible with the interior ballistics calculations for this shoot. On another shoot with the 7-inch gun, only nine of 15 possible probe velocity measurements were good. Analysis of the data indicated that at the higher velocities some probes were shorted by the shock wave ahead of the missile.

5.2 Sixteen-Inch HARP Gun, Fired at Barbados, B.W.I.

Date: March 1965

Velocity Probe base line: 2 feet

Velocity Probe Type: 2.

Rd. No.	Probe Intervals 1 - 2	2 - 3	Average Velocity	Percent Deviation	Radar Apogee Kilofeet
1	5433 ft/sec	5432 ft/sec	5430 ft/sec	1/2	322
2	5750	5600	5675	1 1/2	365
3	4950	4930	4940	1/2	259
4	6390	5690	6040	6	389
5	5400	4500	-	-	427
6	5019	-	5020	-	283
7	5430	4580	-	-	-
8	-	-	-	-	-
9	3721	3847	3785	1.7	-
10	5790	5788	5790	1/2	278
11	5821	5823	5820	1/2	389
12	5742	5772	5755	1/2	384
13	6355	-	-	-	-
14	5148	4973	5060	2	-

Three rounds, Nos. 7, 8, and 13 of the preceding group, broke up in the gun tube. The velocity probes will not function properly when this happens. On eight rounds the deviation was less than 2 percent; on two rounds the deviation was greater than 2 percent. On one round, only one velocity measurement was obtained and this velocity was in agreement with the velocity computed from apogee data. The agreement between radar apogee data, muzzle probe data and the computed altitude data for a range of muzzle velocities are given in Figure 10.

Two observations on the performance of probes can be made from this shoot. First, deviation was greater on the shots with higher pressures. This is probably due to greater deformation of the sabot edge. Second, data on rounds subsequent to a round that breaks up in the gun tube will have greater deviation than normal. This could be caused by the scoring or gouging of the gun tube by the disintegrated round. For each gouge in the tube there is very often a corresponding burr which in turn broaches the sabot.

5.3 Five-Inch HARP Gun, Fired at Wallops Island

Date: August 1965

Velocity Probe base line: 9 inches

Velocity Probe Type: 2.

Rd. No.	Doppler Velocity	Probe Intervals 2 - 3	3 - 4	Average Probe Velocity	Percent Deviation
2390	-	5040	5057	5048	0.16
2391	5155	5119	5081	5100	0.39
2392	4569	5133	5099	5116	0.33
2393	-	5074	5074	5074	0.00
2394	5060	5092	5074	5083	0.18
2395	-	5100	5100	5100	0.00
2396	5120	5133	5162	5148	0.29
2397	5035	5078	5027	5052	0.51

Actually four probes were used for this shoot. The counter used with probe No. 1 was inoperative. To date, the above table reflects the best results obtained with the probes.

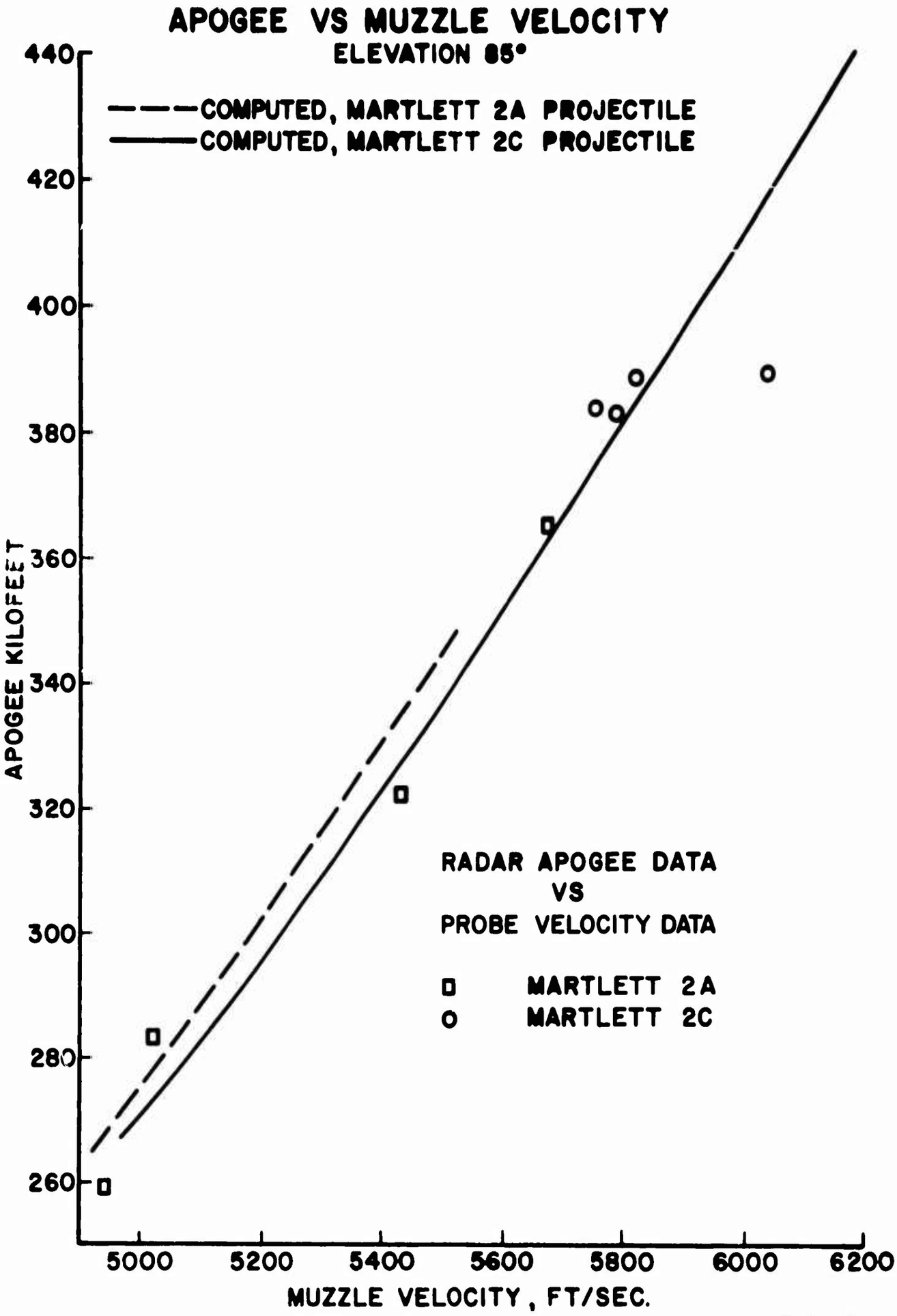
APOGEE VS MUZZLE VELOCITY
ELEVATION 85°
COMPUTED, MARTLETT 2A PROJECTILE
COMPUTED, MARTLETT 2C PROJECTILE
RADAR APOGEE DATA
VS
PROBE VELOCITY DATA
MARTLETT 2A
MARTLETT 2C
APOGEE KILOFEET
440
420
400
380
360
340
320
300
280
260
5000
5200
5400
5600
5800
6000
6200
MUZZLE VELOCITY, FT/SEC.

FIG. 10

6. CONCLUSIONS

The inbore probe technique is capable of producing good velocity data. However, it places severe requirements on the gun and sabot if reliable data are to be obtained. Probably the most difficult part of the technique is to assure that the area of the sabot that deforms the probes lies in a plane that is normal to the direction of motion of the round. The reason that the data from the 5-inch gun are better than the data from the 16-inch gun is simply that the sabots are mainly of metal rather than plywood and that tolerances and clearances are much smaller.

For future firings in which the inbore velocity measuring system may be used, it is suggested that the gun tube contain six probe positions and that at least seven counters be available.

WALTER F. BRAUN

REFERENCES

1. Murphy, C. H. and Bull, G. V. Gun Launched Missiles for Upper Atmosphere Research. AIAA Preprint No. 64-18, January 1964.

2. Staff of the Department of Mechanical Engineering, Project HARP- McGill University. Report on the First Twelve Firings and Status as of July 30, 1963. McGill University Report 63-5, November 1963.

3. Staff of the Department of Mechanical Engineering, HARP- McGill University. August 1963 and January 1964 Firings. Report in Preparation.

4. Boyer, E. D. Five-Inch HARP Tests at Wallops Island, September 1963. Ballistic Research Laboratories Memorandum Report No. 1532, January 1964.

5. Ingram, G. E. Application of Charged Coaxial Cables to the Measurement of Velocity and Impact Time in a Compressed Gas Gun.

6. Report of the March 1965 Test Firing Series Project HARP. McGill University, Space Research Institute. SR1-H-R-9.

DISTRIBUTION LIST

No. of Copies	Organization
20	Commander Defense Documentation Center ATTN: TIPCR Cameron Station Alexandria, Virginia 22314
1	Director Defense Atomic Support Agency ATTN: DASARA-2 Washington, D.C. 20301
1	Director of Defense Research & Engineering (OSD) ATTN: Tech Lib Rm 3E1065 Washington, D.C. 20301
1	Commanding General U.S. Army Materiel Command ATTN: AMCRD-RP-B Washington, D.C. 20315
1	Commanding General U.S. Army Materiel Command ATTN: AMCRD-RV-E Washington, D.C. 20315
1	Commanding General U.S. Army Materiel Command ATTN: AMCRD-DE Washington, D.C. 20315
1	Commanding General U.S. Army Electronics Command ATTN: AMSEL-RD Fort Monmouth, N.J. 07703
2	Commanding Officer U.S. Army Electronics Research & Development Activity White Sands Missile Range New Mexico 88002
2	Commanding Officer U.S. Army Electronics R&D Activity ATTN: Meteorological Dept. Fort Huachuca, Arizona 85613
2	Commanding Officer U.S. Army Electronics R&D Activity ATTN: Environmental Sci Dir White Sands Missile Range New Mexico 88002
4	Commanding General U.S. Army Missile Command ATTN: AMSMI-RPA AMSMI-RB AMSMI-RR AMSMI-RH Redstone Arsenal, Ala. 35809
1	Commanding Officer U.S. Army Engineer Research & Development Laboratories ATTN: STINFO Div Fort Belvoir, Virginia 22060
2	Commanding General U.S. Army Mobility Command ATTN: Rsch Div Warren, Michigan 48090
2	Commanding General U.S. Army Munitions Command ATTN: Tech Lib AMSMU-RC Dover, New Jersey 07801
2	Commanding General U.S. Army Edgewood Arsenal ATTN: SMUEA-O SMUEA-W Edgewood Arsenal, Md. 21010

Unclassified
Security Classification

DOCUMENT CONTROL DATA - R&D

(Security classification of title, body of abstract and indexing annotation must be entered when the overall report is classified)

1. ORIGINATING ACTIVITY (Corporate author)

U.S. Army Ballistic Research Laboratories
Aberdeen Proving Ground, Maryland

2a. REPORT SECURITY CLASSIFICATION

Unclassified

2b. GROUP

3. REPORT TITLE

AN INBORE VELOCITY MEASURING PROBE SYSTEM FOR LARGE CALIBER GUNS

4. DESCRIPTIVE NOTES (Type of report and inclusive dates)

5. AUTHOR(S) (Last name, first name, initial)

Braun, Walter F.

6. REPORT DATE

April 1966

7a. TOTAL NO. OF PAGES

31

7b. NO. OF REFS

6

8a. CONTRACT OR GRANT NO.

b. PROJECT NO. RDT&E 1P014501A33D

c.

d.

9a. ORIGINATOR'S REPORT NUMBER(S)

Technical Note No. 1610

9b. OTHER REPORT NO(S) (Any other numbers that may be assigned this report)

10. AVAILABILITY/LIMITATION NOTICES

Distribution of this document is unlimited.

11. SUPPLEMENTARY NOTES

12. SPONSORING MILITARY ACTIVITY

U.S. Army Materiel Command
Washington, D.C.

13. ABSTRACT

A description of an inbore velocity measuring technique using contact switches is given. Reliability and accuracy requirements are discussed and typical field results are given.

DD FORM 1 JAN 64 1473

Unclassified
Security Classification

Unclassified

Security Classification

14. KEY WORDS	LINK A ROLE	LINK A WT	LINK B ROLE	LINK B WT	LINK C ROLE	LINK C WT
Velocity Measurements Inbore Velocity Projectile Velocity						

INSTRUCTIONS

1. ORIGINATING ACTIVITY: Enter the name and address of the contractor, subcontractor, grantee, Department of Defense activity or other organization *(corporate author)* issuing the report.

2a. REPORT SECURITY CLASSIFICATION: Enter the overall security classification of the report. Indicate whether "Restricted Data" is included. Marking is to be in accordance with appropriate security regulations.

2b. GROUP: Automatic downgrading is specified in DoD Directive 5200.10 and Armed Forces Industrial Manual. Enter the group number. Also, when applicable, show that optional markings have been used for Group 3 and Group 4 as authorized.

3. REPORT TITLE: Enter the complete report title in all capital letters. Titles in all cases should be unclassified. If a meaningful title cannot be selected without classification, show title classification in all capitals in parenthesis immediately following the title.

4. DESCRIPTIVE NOTES: If appropriate, enter the type of report, e.g., interim, progress, summary, annual, or final. Give the inclusive dates when a specific reporting period is covered.

5. AUTHOR(S): Enter the name(s) of author(s) as shown on or in the report. Enter last name, first name, middle initial. If military, show rank and branch of service. The name of the principal author is an absolute minimum requirement.

6. REPORT DATE: Enter the date of the report as day, month, year, or month, year. If more than one date appears on the report, use date of publication.

7a. TOTAL NUMBER OF PAGES: The total page count should follow normal pagination procedures, i.e., enter the number of pages containing information.

7b. NUMBER OF REFERENCES: Enter the total number of references cited in the report.

8a. CONTRACT OR GRANT NUMBER: If appropriate, enter the applicable number of the contract or grant under which the report was written.

8b, 8c, & 8d. PROJECT NUMBER: Enter the appropriate military department identification, such as project number, subproject number, system numbers, task number, etc.

9a. ORIGINATOR'S REPORT NUMBER(S): Enter the official report number by which the document will be identified and controlled by the originating activity. This number must be unique to this report.

9b. OTHER REPORT NUMBER(S): If the report has been assigned any other report numbers *(either by the originator or by the sponsor)*, also enter this number(s).

10. AVAILABILITY/LIMITATION NOTICES: Enter any limitations on further dissemination of the report, other than those imposed by security classification, using standard statements such as:

(1) "Qualified requesters may obtain copies of this report from DDC."

(2) "Foreign announcement and dissemination of this report by DDC is not authorized."

(3) "U. S. Government agencies may obtain copies of this report directly from DDC. Other qualified DDC users shall request through _____."

(4) "U. S. military agencies may obtain copies of this report directly from DDC. Other qualified users shall request through _____."

(5) "All distribution of this report is controlled. Qualified DDC users shall request through _____."

If the report has been furnished to the Office of Technical Services, Department of Commerce, for sale to the public, indicate this fact and enter the price, if known.

11. SUPPLEMENTARY NOTES: Use for additional explanatory notes.

12. SPONSORING MILITARY ACTIVITY: Enter the name of the departmental project office or laboratory sponsoring *(paying for)* the research and development. Include address.

13. ABSTRACT: Enter an abstract giving a brief and factual summary of the document indicative of the report, even though it may also appear elsewhere in the body of the technical report. If additional space is required, a continuation sheet shall be attached.

It is highly desirable that the abstract of classified reports be unclassified. Each paragraph of the abstract shall end with an indication of the military security classification of the information in the paragraph, represented as *(TS)*, *(S)*, *(C)*, or *(U)*.

There is no limitation on the length of the abstract. However, the suggested length is from 150 to 225 words.

14. KEY WORDS: Key words are technically meaningful terms or short phrases that characterize a report and may be used as index entries for cataloging the report. Key words must be selected so that no security classification is required. Idenfiers, such as equipment model designation, trade name, military project code name, geographic location, may be used as key words but will be followed by an indication of technical context. The assignment of links, rules, and weights is optional.

Unclassified

Security Classification