AD 637203

FINDINGS FROM RECENT STUDIES OF THE DEFENSE LABORATORIES BY THE TASK 97 ACTION GROUP

by

E. M. Glass
Executive Director, Task 97 Action Group

Presented before the

Panel on Inflexibilities in the Federal System—
Inherent or Management's Choice?

Symposium on the Environment of the Federal Laboratory
Federal Council for Science and Technology

7-8 December 1964
(Reissued February 1966)

Office of the Director of Defense Research and Engineering
Washington, D. C. 20301

Management Analysis Memorandum 64-1

CONTENTS

Introduction 1

Phase I—Manpower and Personnel . . . . . .

Phase II—Budgeting, Accounting and Programming . . . . . .

Phase III—Military Construction and Supporting Services . . . . . .
Critical Issues . . . . . .
Military Construction . . . . . .
Supporting Services . . . . . .

Summary and Conclusions . . . . . .

Abbreviations . . . . . .

FIGURES

1. Functional Staffs within the Department of Defense 1

2. Survey of Delegations of Authority in AMD and RTD of AFSC . . . 1

3. Department of the Air Force Approval Levels for Facilities Work . 1

4. Department of the Navy Annual Military Construction Program—Review Cycle 1

5. Department of the Air Force Project Processing Military Construction Program 1

6. Department of the Navy Procedures for Processing Urgent Minor Construction Projects Costing $25,001 up to $200,000 1

7. Department of the Navy Annual Military Construction Program—Review Cycle Functional Responsibilities 18

8. Host Tenant Relationships—Aberdeen Proving Grounds 19

9. Air Force Command and Support Relationships 21

INTRODUCTION

So much has transpired since 1961, when the Department of Defense began taking a very serious look at its in-house capabilities, that I hardly know where to begin.

My own observations are that the inflexibilities we have are both inherent and of management's choice—inherent because in many respects they seem to be endemi to a large bureaucratic structure; management's choice, not necessarily because of deliberate actions by management, but rather owing to the lack of management's attention, its lack of real understanding of the purpose and the needs of the research and development (R&D) process and, finally, the general desire of management to treat as many activities as possible in a standard, uniform manner.

Laboratories in the Department of Defense are really big business, which is good reason for top-level concern about them. The following statistics illustrate this:

(1) Approximately 140 laboratories (depending on what you count)
(2) Replacement value of $8 billion
(3) 30,000 professionals
(4) Billions of dollars in specialized equipment
(5) Operating budget of $1.5 billion

The observations I present today are a direct result of an activity called Task 97.

Task 97 is probably unique in character and concept within the Federal government. Before discussing the findings and observations on the Defense laboratory situation, I think it might be pertinent to place this discussion in proper context by reviewing briefly the history of the Department of Defense's program to strengthen its in-house laboratories.

When Mr. McNamara first became Secretary of Defense in 1961, he asked 120 questions to provide the basis for the future posture of the Department of Defense. Question 97 was: "Advise me ways in which to improve the operations of the in-house laboratories." To answer this question and to develop solutions to problems that might arise, a task force was set up under the chairmanship of Dr. Eugene G. Fubini (now an Assistant Secretary of Defense), with Dr. John Golden (now with IBM Corporation) as Executive Director.

Task 97 visited many laboratories, talked to many people, and turned in a report which was endorsed by Mr. McNamara by his memorandum of 14 October 1961. In this memorandum, he reiterated the importance of in-house laboratories to furthering the Department of Defense's mission and proposed a number of positive actions to be taken by the Military Departments to upgrade their in-house capabilities. Out of this came—

(1) a sensible approach to taking full and complete advantage of the PL-313 provisions and a more rational approach to compensation rates under this authority;

(2) the establishment of a Laboratory Director's Fund for work by the laboratory director to be of promise or importance, with only after-t review by higher authority; and

(3) the pinpointing of responsibilities with the Assistant Secretar (R&D) of the Military Departments for the health and environment of the in-h laboratories.

The rest of his message was not implemented as readily, because the and thoughts meant different things to different people—depending upon where sits, what one's background is, and what significant changes in the structure be necessary to carry out the intent. This part of the message said that Dep of Defense (DoD) in-house laboratories would be used as a primary means of carrying out Defense Department programs; (2) delegating greater decision-r authority to the laboratory directors; (3) solving the many administrative diff that prevented laboratories from being as effective as they should be; and (4) establishing clear lines of technical management and responsibility for each laboratory.

Just as Task 97 was completing its report, the Bureau of the Budget be organizing an interdepartmental task force to study the problems of governm contracting for R&D. This activity, which must be familiar to most of you, the first broad Executive Branch policy on R&D activities in the history of th country. As a matter of historical interest, I am told that President Kenned one of the later drafts with him to Palm Beach one week and personally work over. Secretary McNamara and Secretary Gilpatric also studied and worked report in detail—as of course, did Dr. Brown and Dr. Fubini.

This "Bell Report,"[1] superimposed upon the Department of Defense fin placed even greater emphasis on taking constructive actions in many areas. the Bell Report specifically cited this task force's activities as an appropriat cedure to follow.

On 30 March 1962, Dr. Brown, the Director of Defense Research and Engineering, reconstituted the Task 97 Study Group as the Task 97 Action Gr recognition of the fact that strengthening the in-house laboratories "is not onl matter of study but one of action." Mr. Willis B. Foster, now with the Nation Aeronautics and Space Administration (NASA), replaced John Golden as Execu Director. Its concept of operations was to establish a core of permanent men generally six, with the responsibility for its continuing operation. These men were from Dr. Brown's staff and from the Offices of the Assistant Secretaries of the Military Departments. Additional members, problem-area specialists, to be added, depending upon the problem being examined. Also every level of management was represented in all visits to laboratories so that, as a probler raised, we could follow the problem up the chain of command on the spot and e obtain an immediate solution or a basis for pinpointing an individual for action also provided a rare opportunity to communicate the rationale behind many de to the people directly affected—the laboratory personnel.

---

[1]Bureau of the Budget (David E. Bell, Director), Report to the Presiden Government Contracting for Research and Development, 30 April 1962.

PHASE I—Manpower and Personnel

The first assignment of the Task 97 Action Group dealt with manpower and personnel. DoD specialists in manpower and personnel, in concert with the Civil Service Commission, joined with the task group to examine the most pressing problems in this most important area. The assistance of the Civil Service Commission people was invaluable for many reasons: It gave us representation from the complete spectrum of the personnel community for assistance and interpretation and gave the technical people a better insight into the limitations and flexibilities of the Federal Personnel System.

During this phase, in our visits to nine laboratories, we uncovered approximately 300 personnel or personnel-related problems. They cover the full spectrum of problems in hiring, development, retention, etc.—some major, some minor and some picayune. Many were purely local problems. At this time I won't review all of the problems because of our time limitation. Two or three major observations were possible:

(1) The Military Services were not taking full advantage of the flexibilities existing within the System, while at the same time they were asking for reforms.

(2) There was a lack of communication between the laboratories and the personnel people and a similar relationship between the personnel people and the Civil Service Commission.

(3) There was a lack of authority by laboratory line management over the personnel affairs of the organization. In many cases, laboratory directors had abdicated their personnel line responsibilities, creating a vacuum which had been filled by the personnel staff people.

This resulted in a number of actions which we might summarize now:

- John Macy, Chairman of the Civil Service Commission, published his now famous article, "We Must Close the Communications G-A-P,"[2] pointing out many flexibilities not being used for scientists and engineers. Since then communications have improved significantly. The assistance from the Civil Service Commission during and since Phase I has been extremely helpful and productive in a wide variety of personnel areas.

- All three Departments did a great deal of self-assessment to eliminate many of the difficulties in this area. The Navy, in particular, took this quite seriously. A special study group of the Office of Industrial Relations visited 28 R&D activities and two boards of civil service examiners, identified 50 specific problems of Navy organizations, and offered a number of solutions that have benefited the laboratories.

- Important input, based upon specific examples, was provided to the Civil Service Commission, and thus had direct influence upon many features of the Salary Reform Act of 1962 and subsequent legislation.

---

[2] Civil Service Journal, October-December 1962.

• Some relief was obtained for laboratories in securing foreign j odicals and scientific equipment vis-à-vis the gold-flow problem.

• Security review of scientific papers was delegated to the labor level.

• New policies relating to air-conditioning equipment for laborat treating them the same as any other type of technical equipment, were establ

• There were more favorable interpretations of the Government ployees Training Act, 7 July 1958, particularly in the restrictions on the 1-y in-10 rule.

• The need for some relief in the rigid manpower ceilings to enh training and career development was dramatized. This is now represented b tral pools of manpower spaces and dollars to support training—hopefully, wit hampering laboratory operations.

These are but a few of the results that arose from Phase I, without cha a law—which shows that many opportunities for positive action exist within th present framework. Perhaps one of the unplanned benefits from this activity the resulting closer relationship between the R&D community and the personn specialists.

PHASE II—Budgeting, Accounting and Programming

The second phase of our operations was concerned with inflexibilities in areas of budgeting, programming and accounting and their impact upon labora One of the big immediate differences, we discovered, between the fiscal probl and those in manpower and personnel was that the fiscal problems were gener the type that could not be resolved locally or independently—nor were there gr numbers of them.

We ended up with seven major problem areas that appear to have an adv effect upon laboratory operations. Again, these problems can be solved withi Department of Defense, if management determines that this is the appropriate e of action. The seven major problem areas we isolated are as follows:

(1) Section 3679 of the Revised Statutes (Its application by the Offi the Secretary of Defense (OSD) limits the freedom in reprogramming resource subordinate levels of management.)
(2) Program control at the higher levels of management
(3) Impact of project managers on in-house laboratories
(4) Excessive reporting and paper work
(5) Indiscriminate centralization
(6) Degradation of the "no-year funds" concept in RDT&E (researc development, test and evaluation)
(7) Lack of uniform statistics, which hampers analyses between a among organizations.

Since many of these problems are not a direct concern of this sym I do not plan to discuss them in detail; I will state, however, that we have beer to attack aspects of them successfully—although, as is usually the case, more to be done.

PHASE III—Military Construction and Supporting Services

Early this year we embarked upon Phase III of our activity. We are now in the final phases of writing our report and formulating our conclusions and recommendations. Dr. C.W. Sherwin, Deputy Director for Research and Technology in the Office of the Director of Defense Research and Engineering (ODDR&E), is the present Chairman, and I am the Executive Director.

The current permanent members of Task 97 are:

Dr. C.W. Sherwin, Chairman	ODDR&E
Mr. E.M. Glass, Executive Director	ODDR&E
Mr. P.K. Ogloblin	ODDR&E
Mr. P.S. Brady	General Counsel, OSD
Mr. C.R. Woodside	Office of the Assistant Secretary of the Army (R&D)
Dr. H.J. White[3]	Office of the Assistant Secretary of the Navy (R&D)
Dr. J.N. Adkins	Office of Naval Research (ONR)
Mr. T.H. Dalehite	Office of the Assistant Secretary of the Air Force (R&D)
Colonel H.C. Hamlin	Headquarters, U.S. Air Force

Critical Issues

Again, the areas of military construction and supporting services lent themselves to a different type of treatment from the other phases. We found many individual problems; maybe we solved or eased a few. From these individual problems, we are attempting to distill our so-called critical issues. These are major —or "mainstream"—problems which are either the concern of individual Military Departments or the Department of Defense as a whole.

Returning to fundamentals, we are examining the written policies on the management of DoD in-house laboratories: At what level are they written? Do they contain any basic deficiencies? Do they need updating, clarification or strengthening? Are they, in fact, being implemented? By whom? How well?

Our attention to policies must be self-evident. Policies are guides to action, and they are critical in establishing the intellectual and procedural climate of an organization. Generally, an organization is no better than its policies—although the converse is many times true.

The areas of interest in our current study are particularly sensitive to factors such as the checks and balances in our system; the legislative constraints we must live with; our organizational structure, the lines of authority and responsibility; the degree to which decision-making is delegated, the pressures for centralization; and the complexity of procedures and review cycles related to overall decision-making which are so dependent upon the other factors.

[3]Dr. White has since left the Department of the Navy and is being replaced by Dr. W.P. Raney.

Thus, we were forced to undertake a detailed fact-finding activity to de the situation as it existed, if we were to be in a position to recommend meani and fundamental changes in the way we conduct our in-house RDT&E activitie remainder of this discussion describes the kind of studies we are performing order to develop facts upon which rational decisions can be based.

Someone very wise once said that a picture is worth a thousand words. ever possible, we have attempted to display in chart form the various factors cussed previously, with major emphasis on flow charts to reflect the procedu and review processes.

Figure 1 portrays the line and staff organization within which the RDT& activities must function. There are basic organizational differences among tl Military Departments, but this may be good rather than bad. We now know hc many echelons exist between the Assistant Secretary (R&D) and the laboratori the nature of the staffs at each of these echelons. This, then, offers a base li from which changes can be made where appropriate.

Every report ever written on the management of laboratories has stress necessity of delegating more authority to the laboratory directors. Yet no one really measured what authorities are actually being delegated and what additio delegation should be effected. For the first time to our knowledge, an effort i made to delineate important activities of laboratories (along the lines shown in Figure 2) to determine quantitatively the current degree and the overall patter delegations. This "inventory of authority," displayed usefully, may provide a ful tool of analysis and a basis for making an important measurement of organ tion viability.

Military Construction

The lack of modern, up-to-date facilities is probably one of the most fru ting and universal problems. There just doesn't seem to be enough money to around. This applies not only to the acquisition of new facilities, but also to tl important areas of repair, maintenance, alterations, rehabilitation, etc. This area appears to be inundated in a complex sea of laws, regulations, procedure diverse and conflicting opinions.

We have spent a great deal of time developing displays of the decision-m process and paper-work procedures so that we can make appropriate analyses recommendations. As can be seen from Figure 3, there are significant differe in approval level, depending upon the nature of the facilities' work, the appropi tion under which it is normally funded and the level of funding involved. While display covers Air Force activities, the Army and Navy have similar patterns differing only in detail.

The varying levels of approval also result in marked differences in proce for processing the paper work to obtain such approvals. Again, we have develc flow charts of the review cycles for all categories of facilities work. Displays Navy and Air Force review cycles for the annual military construction program shown in Figures 4 and 5. The Air Force display shows the interplay between t funding and design processes.

Figure 6 portrays the review cycle for minor construction projects costing from $25,001 up to $200,000. In these studies, we have attempted to determine the function of each major organization in the review chain; this is shown on the right-hand side of Figure 6. Similar displays have been developed for the other review cycles, as illustrated in Figure 7 for the Navy's annual military construction program.

In addition to these types of studies, we are trying to assess the military construction objectives of the Department of Defense to determine whether its facilities programs are adequate or inadequate. This entails the availability of answers to such questions as the following:

(1) On what scientific and technical efforts should the Department of Defense put its greatest effort? Its least?

(2) What laboratories are to be expanded or upgraded for the foreseeable future?

(3) Are any to be phased out or discontinued?

(4) What new laboratories should be created? Or what missions of existing laboratories should be changed significantly?

(5) How should the laboratories be organized?

Answers to these types of questions make it possible to set priorities, to plan facilities expansion and contraction on an orderly basis and to relate them to programs, money, people and work in a meaningful way.

Supporting Services

The final area I want to touch upon today is supporting services. The criticality of this problem was emphasized by laboratory people during earlier phases of Task 97. This seems to be a Federal rather than a DoD problem.

The Bell Report cites the following as one of the major reasons for the substantial increases in contracting out Federal research and development work:

> Contractors have often been able to provide a superior working environment for their scientists and engineers—better salaries, better facilities, better administrative support—making contracting operations attractive alternatives to Federal work.

One of the improvements recommended by the Bell Report was based on the necessity for

> ...delegating to research laboratory directors more authority to make programs and personnel decisions, to control funds and otherwise to command resources which are necessary to carry out the mission of the installation.[4]

[4]Underlining provided.

> . . . the evidence is compelling that management arrangements for many Government operated research and development facilities are cumbersome and awkward.

The Astin Report[5] identifies supporting and administrative service activities as of the key elements in providing the proper creative environment for scientists engineers. The report underscores this area as follows:

> Service activities, such as library, personnel, fiscal, supply, shops and plant maintenance are essential to the proper functioning of a laboratory. Their purpose is to facilitate work of the scientists and engineers in fulfilling the responsibilities of the organization. The general nature of laws and regulations under which Government Laboratories must operate makes it very easy for employees charged with administrative tasks to exercise a degree of control rather than perform service.
>
> * * * * *
>
> The ideal situation will prevail only if the supporting and administrative service staffs as well as the scientific staff are fully responsible to the laboratory director. In a number of Government laboratories, accountability of some of the Supporting Service Units to organizational echelons above the laboratory director denies to him the authority he must exercise to discharge effectively his primary technical responsibilities.

Within the Department of Defense, we are trying to examine the pattern of "supporting services" for laboratories. We found a number of differing morphol ogies—some, accidents of history and some, the product of design. The Army a Air Force employ the host/tenant concept broadly with respect to their complexe of field stations and bases. Only in rare cases do we find a laboratory that is a host. Generally, the laboratory is but one of many activities at a particular loc and is, therefore, a tenant and dependent upon the host for a major portion of its supporting services.

In the Navy, the converse seems to be true, most of the laboratories being more directly the masters of their support. But even here there are significant exceptions. The Bureau of Yards and Docks has been establishing Public Work Centers in a number of geographical areas to provide centralized public works to all Naval activities in that area. There are also a number of isolated cases, suc as the Naval Underwater Ordnance Test Station, which exhibit host/tenant relatio ships like those of the Army or the Air Force.

---

[5]Federal Council for Science and Technology, Panel on Environment and Incentives for Research (Dr. Allen V. Astin, Chairman), The Competition for Quality—Part II, "Non-salary factors affecting the selection, recruitment, devel ment, and retention of superior personnel in the scientific service of the Federal Government," April 1962.

Again we have attempted to define some of the relationships as they exist in the manner shown in Figures 8 and 9. Figure 8 shows the host/tenant relationships at the Army's Aberdeen Proving Ground. It shows both the command and support relationships where both the laboratories and the host report to the Army Materiel Command (AMC). Figure 9 displays Air Force command and support relationships where the host and the RDT&E organizations report to different commands, the Logistics Command (AFLC) and Systems Command (AFSC), respectively.

Through these studies we hope to analyze the economy and effectiveness of some of these more complex arrangements and the degree of their responsiveness to the needs of the DoD's in-house laboratories.

SUMMARY AND CONCLUSIONS

I have attempted to describe to you very briefly some of the activities of the DoD Task 97 Action Group. I regret that we are not far enough along in our Phase III studies to present a complete analysis of problems related to the interests of this symposium. At least, it has been possible to show you our approach and methodology. From this, we hope that we can point the way to positive management action. Facts and knowledge are powerful tools of decision-making. Maybe our next progress report will reflect changes resulting from these studies.

FUNCTIONA'. I

N 3TE

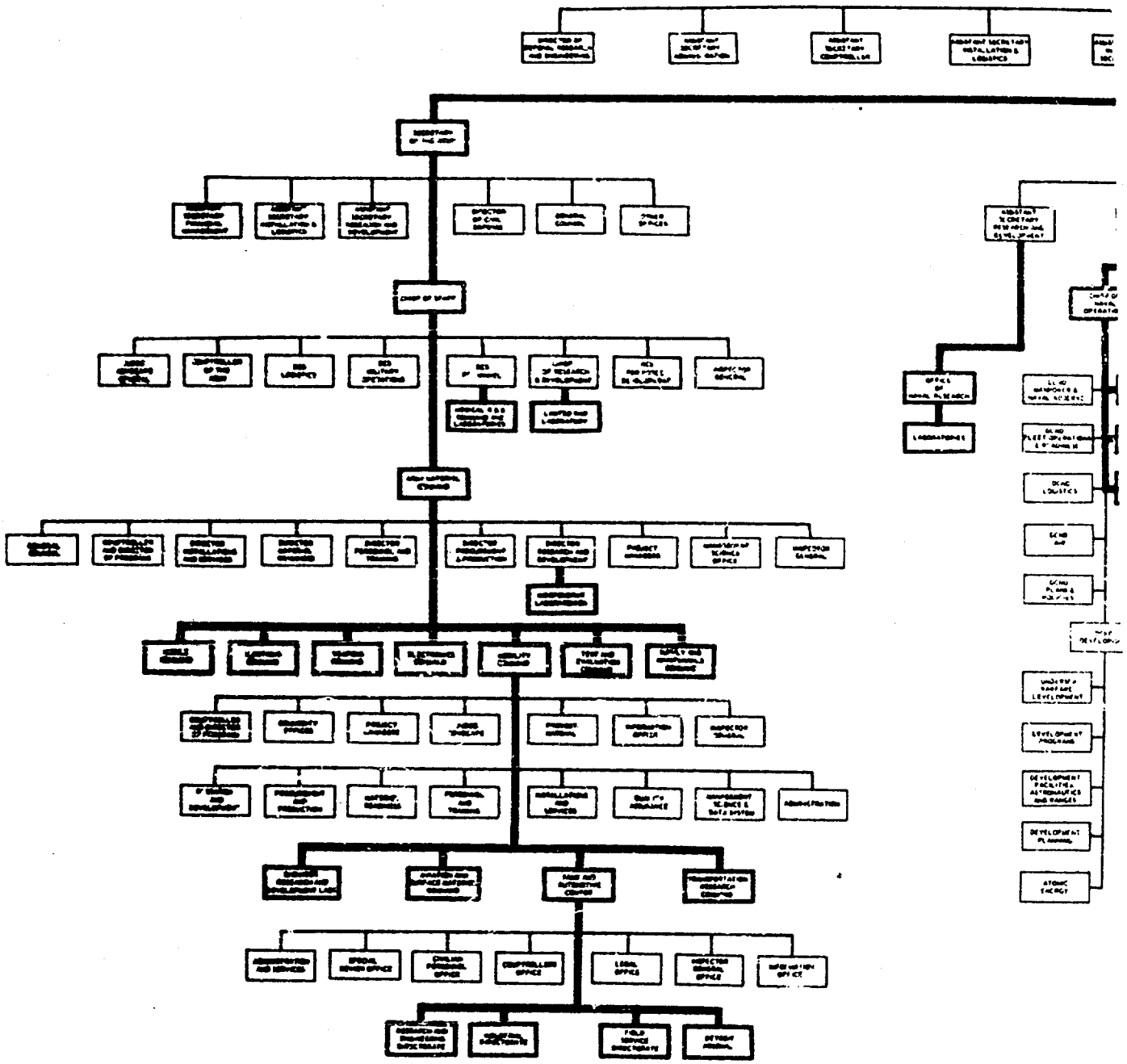

FUNCTIONAL STAFFS WITHIN THE DEPARTMENT OF DEFENSE

NOTE: HEAVY LINES SHOW THE LINE ORGANIZATION

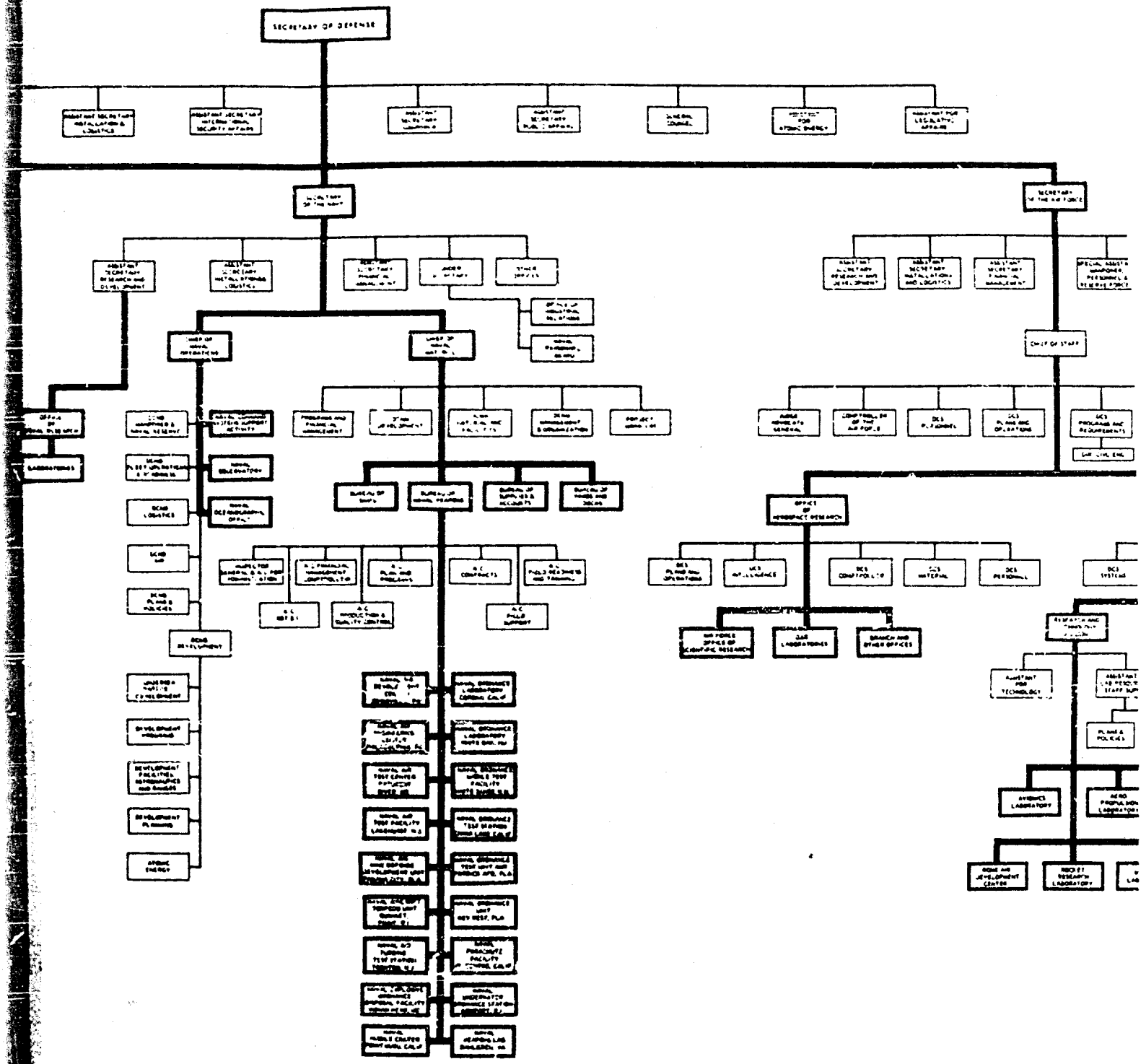

RTMENT OF DEFENSE

ORGANIZATION

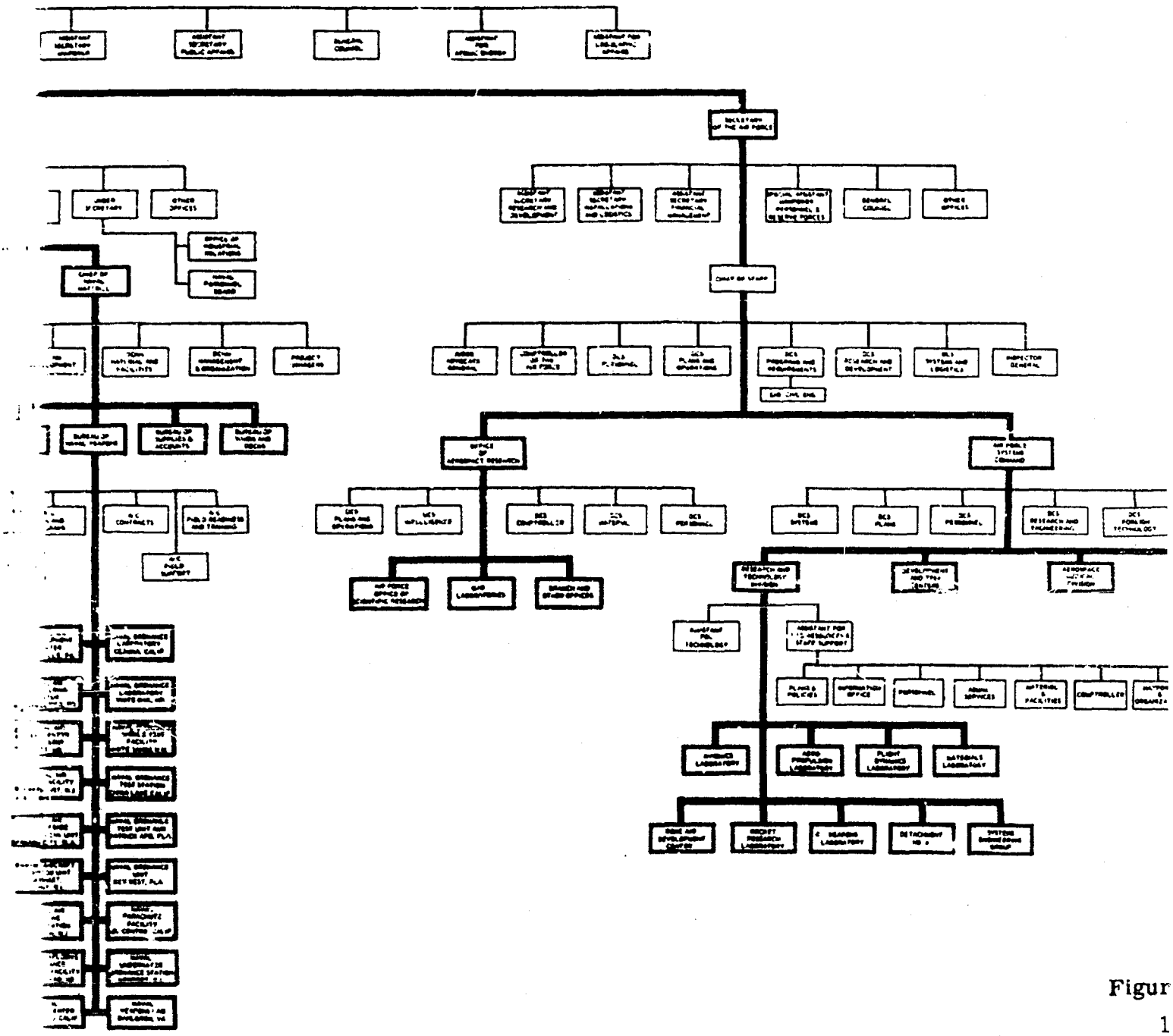

Figur

1

Figure 2

SURVEY OF DELEGATIONS OF AUTHORITY

IN AMD AND RTD OF AFSC

Item	DoD USAF	HQ AFSC	HQ RTD AMD	AMD Labs.	RTD Labs.	SEG	Other
Manpower							
Allocation of manpower	/						
Reprogram within organization in conformance with established guidelines (with concurrent notification to HQ. AFSC; approval is assumed)			/		/		/
Personnel—Civilian							
Essentially all actions except as noted below		(AMD only)	/		/		/
Civilian training in non-government installations up to 80 hours			/		/		/
80 hr but 120 days		/					
120 days		/					
Approval of candidates for senior Service schools and equivalent Sloan (all other USAF)		/					
Establish or fill PL-313 or supergrade positions (and CSC)		/					
Fill GS-15 positions (except as referred by Command)		/					
Establish salary rate above minimum for GS-13 and above (ruling by CSC)		/					
Appoint consultants without compensation		/					
Union-management relations:							
Determinations of less than installationwide bargaining units		/					
Initial agreement with a unit granted exclusive recognition		/					
Approval of cash awards:							
Tangible benefits	(above	/	$1000)	/	/	(AMD only)	/
Intangible benefits	(above	/	$300)	/	/	(AMD only)	/

DEPARTMENT OF THE AIR FORCE

APPROVAL LEVELS FOR FACILITIES WORK

AIR FORCE SYSTEMS COMMAND LABORATORIES

CATEGORY OF WORK	APPRO-PRIATION	AMOUNT	APPROVAL LEVEL: CONGRESS	SECDEF	SECAF	HQ USAF	HQ AFSC	DIV OR CENTER	BASE CMDR	LAB DIRECTOR	APPLICABLE PUBLIC LAWS, DIRECTIVES, INSTRUCTIONS, REMARKS
GENERAL PURPOSE CONSTRUCTION	MCP	OVER $10,000	X								DOD DIRECTIVE 7040.4 AFM 85-26 ANNUAL HQ USAF INSTRUCTIONS
SPECIAL PURPOSE CONSTRUCTION		OVER $1,000,000		X							10 USC 2353 - RESTRICTED TO CONTRACTORS ENGAGED IN RDT&E WORK THIS DOES NOT AUTHORIZE NEW CONSTRUCTION OR IMPROVEMENTS HAVING GENERAL UTILITY SAF - ORDER 715.1 ARMED SERVICES PROCUREMENT REGULATIONS AIR FORCE PROCUREMENT INSTRUCTIONS
		$500,000 to $1,000,000			X						
		UP TO $500,000					X				
EMERGENCY MILITARY CONSTRUCTION	MCP	OVER $200,000	X								SECTION 305 P. L. 88-390
MINOR CONSTRUCTION OR ALTERATIONS	MCP	$50,000 to $200,000		X							10 USC 2674 DOD DIRECTIVE 7040.2 AFR 85-6 ANNUAL HQ USAF INSTRUCTIONS BASE COMMANDER APPROVAL AUTHORITY FOR MINOR CONSTRUCTION UNDER AFR 85-6 IS $5,000 BASE COMMANDER APPROVAL AUTHORITY FOR ALTERATIONS UNDER AFR 85-6 IS $10,000 AFSC HAS DELEGATED $25,000 MAJOR COMMAND APPROVAL AUTHORITY FOR MINOR CONSTRUCTION AND ALTERATION UNDER AFR 85-6 TO RTD. RTD HAS DELEGATED THIS $25,000 APPROVAL AUTHORITY TO LABORATORY DIRECTORS.
		$25,000 to $50,000			X						
	RDT&E	UP TO $25,000								X	
REPAIRS	O&M RDT&E*	OVER $200,000		X							AFR 85-6 PROJECTS OVER $5,000 HAVING A COST IN EXCESS OF 50% OF REPLACEMENT COST OF COMPLETE FACILITY SHALL BE APPROVED BY ASD (I&L). BASE COMMANDER HAS APPROVAL AUTHORITY UP TO $50,000 FOR EMERGENCY REPAIRS. DIVISION OR CENTER COMMANDER HAS $200,000 APPROVAL AUTHORITY FOR EMERGENCY REPAIRS.
		$100,000 to $200,000					X				
		$25,000 to $100,000						X			
		UP TO $25,000							X		
MAINTENANCE	O&M RDT&E	OVER $250,000				X					AFR 85-6 HQ USAF HAS UNLIMITED APPROVAL AUTHORITY FOR MAINTENANCE PROJECTS
		$100,000 TO $250,000					X				
		$50,000 TO $100,000						X			
		UP TO $50,000							X		

Figure 3

Figure 4

DEPARTMENT OF THE NAVY

ANNUAL MILITARY CONSTRUCTION PROGRAM—REVIEW CYCLE

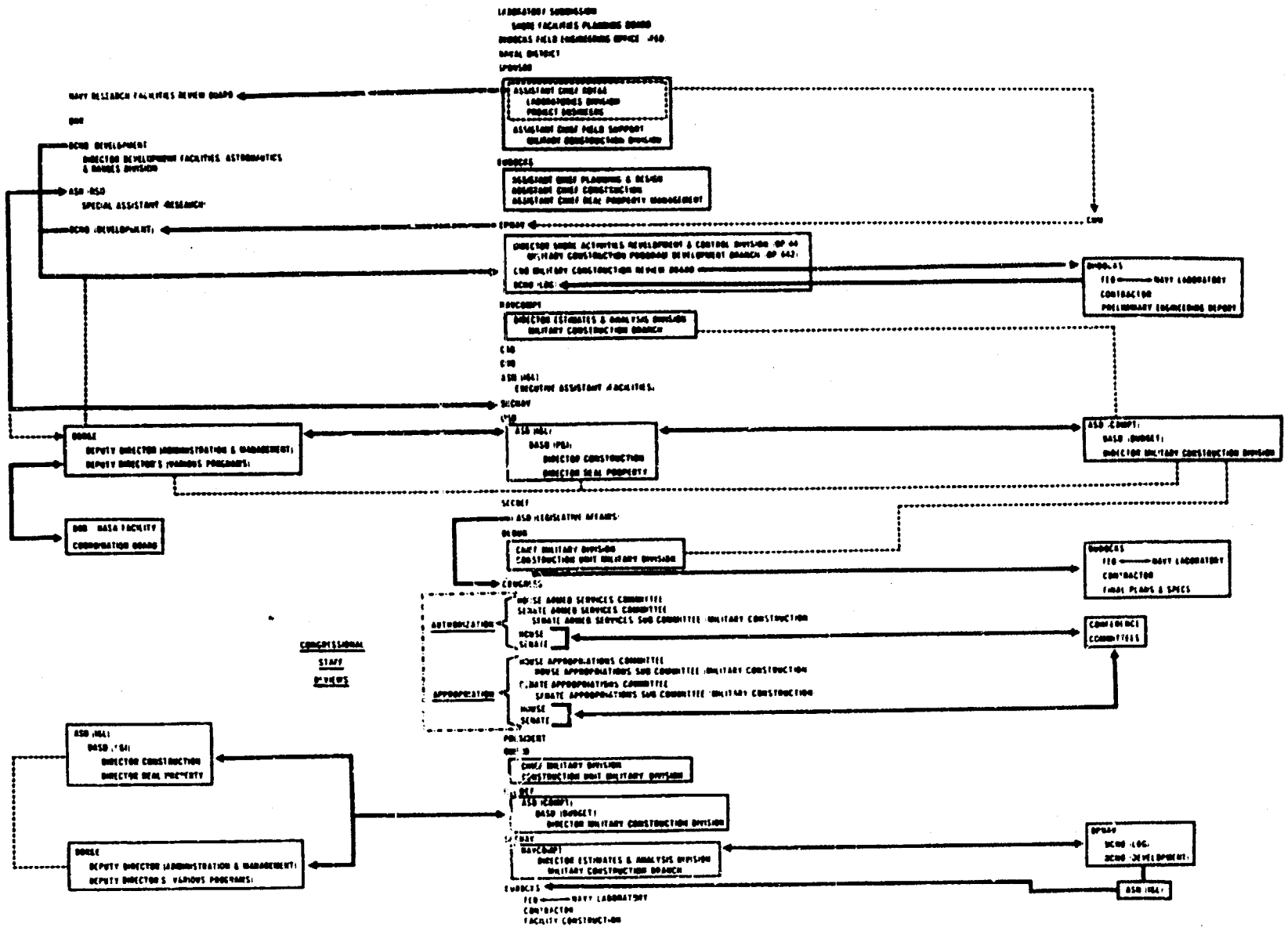

DEPARTMENT OF THE AIR FORCE

PROJECT PROCESSING MILITARY CONSTRUCTION PROGRAM

FOR SUPPORT FACILITIES

AIR FORCE SYSTEMS COMMAND LABORATORIES

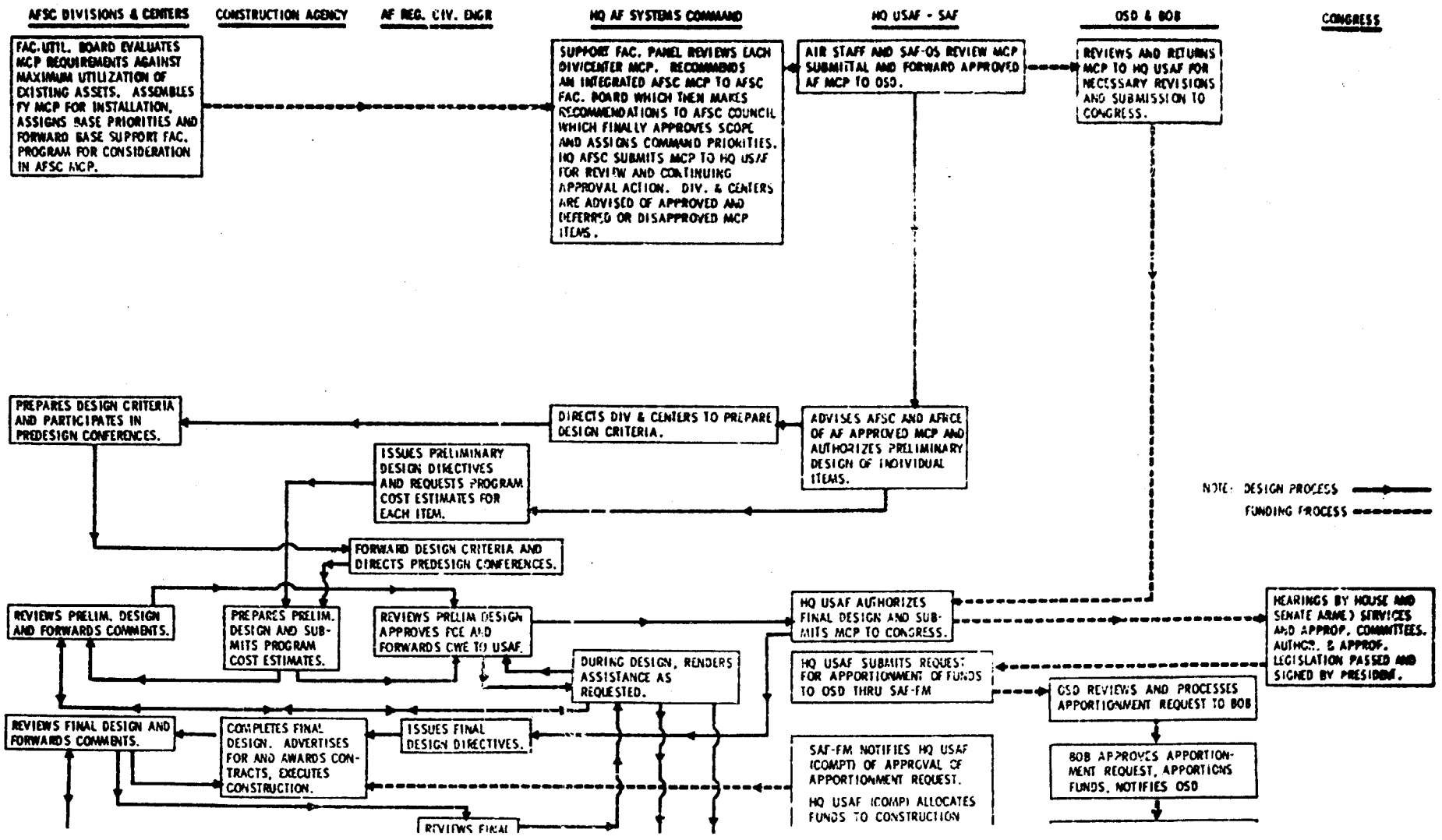

Figure 5

DEPARTMENT OF THE NAVY

Figure 6

PROCEDURES FOR PROCESSING URGENT MINOR CONSTRUCTION PROJECTS COSTING $25,001 UP TO $200,000

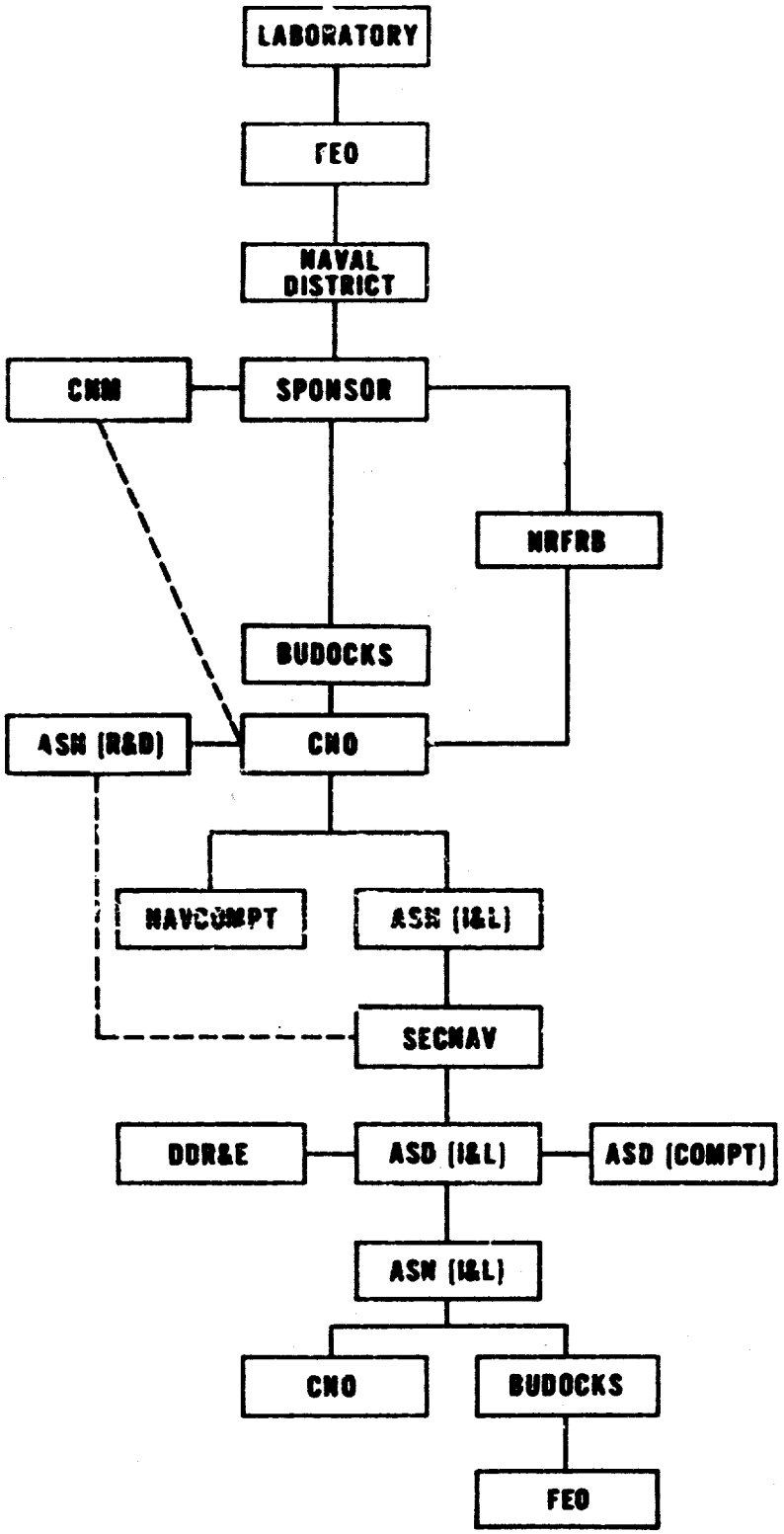

FUNCTION

Laboratory prepares and submits project.

Field Engineering Office (FEO) of BUDOCKS reviews for design and construction features, cost estimate, etc.

Commandant, Naval District reviews for site selection and need.

Sponsor reviews for urgency, need, technical requirement, duplicity, etc. Prepares project papers for submission to higher review level. Requirement coordinated with CNM. RDT&E projects submitted to NRFRB.

NRFRB reviews project for need, urgency, feasibility, duplicity, etc. Comments submitted to CNO.

BUDOCKS reviews project for engineering and construction aspects.

CNO reviews for urgency, need, conformity to legal criteria, authorization and funding aspects. RDT&E projects coordinated with ASN (R&D). CNO endorses project to ASN (I&L). NAVCOMPT notified of proposed project funding by copy of CNO endorsement.

ASN (I&L) reviews for urgency, need, etc.

SECNAV endorses project to ASD (I&L).

ASD (I&L) review coordinated with ASD (COMPT) for legal, technical, and funding aspects. RDT&E projects coordinated with DDR&E. ASD (I&L) notifies ASN (I&L) of approval.

ASN (I&L) notifies CNO and BUDOCKS of project approval.

CNO coordinates with BUDOCKS as required. BUDOCKS allocates funds to FEO handling contract.

FEO awards contract for construction of project.

Figu:

DEPARTMENT OF THE NAVY
ANNUAL MILITARY CONSTRUCTION PROGRAM
REVIEW CYCLE
FUNCTIONAL RESPONSIBILITIES

MAJOR PROGRAM OFFICE		FUNCTION																					
		1 Plan Item Requirement	2 Conduct Technical Feasibility Study	3 Conduct Engineering Feasibility Study	4 Select Site	5 Prepare Item Submission	6 Technical R&D Review	7 Cost Estimate Review	8 Design & Construction Review	9 Determine Priority	10 Program Review	11 Justify Item	12 Coordinate Program	13 Conduct Preliminary Engineering Report	14 Financial Review	15 Legal Review	16 Policy Review	17 Conduct Final Plans & Specifications	18 Authorize Item	19 Appropriate Funds	20 Sign Public Law Bills	21 Apportionment Review	22 Construct Facili
1	LABORATORY	X	X	X	X	X	X			X		X		X				X					X
2	FEO	X		X	X			X	X					X				X					X
3	CONTRACTOR													X				X					X
4	NAVAL DISTRICT				X					X													
5	SPONSOR	X	X	X	X	X	X	X	X	X	X	X	X	X			X	X				X	
6	BUDOCKS	X		X	X	X		X	X			X		X				X				X	X
7	CNM												X				X						
8	NRFRB						X			X	X						X						
9	ONR						X			X	X						X						
10	DCNO (DEVEL)	X	X				X	X		X	X	X	X		X		X					X	
11	DIR SH ACT DEV & CONTR DIV (OP-44	X			X			X		X	X	X	X	X	X		X	X				X	
12	CNO MIL CONST REV BD				X			X		X	X		X	X	X		X					X	
13	DCNO (LOG)	X								X	X	X	X		X		X					X	
14	NAVCOMPT										X		X		X	X	X					X	
15	CAB										X				X		X					X	
16	CNO										X				X		X					X	
17	ASN (R&D)						X			X	X		X				X					X	
18	ASN (I&L)									X	X		X		X		X					X	
19	SECNAV										X				X		X					X	
20	DASD (P&I)				X			X	X	X	X	X	X	X	X		X					X	
21	DDR&E						X	X		X	X	X	X				X					X	
22	DOD-NASA FAC COORD BD						X				X						X						
23	ASD (COMPT)										X		X		X	X	X					X	
24	ASD (I&L)				X					X	X	X			X		X					X	
25	SECDEF										X				X		X					X	
26	BUBUD										X		X		X	X	X					X	
27	CONGRESS				X			X			X				X		X		X	X			
28	PRESIDENT																				X		
		1	2	3	4	5	6	7	8	9	10	11	12	13	14	15	16	17	18	19	20	21	22

HOST TENANT RELATIONSHIPS - ABERDEEN PROVING GROUND

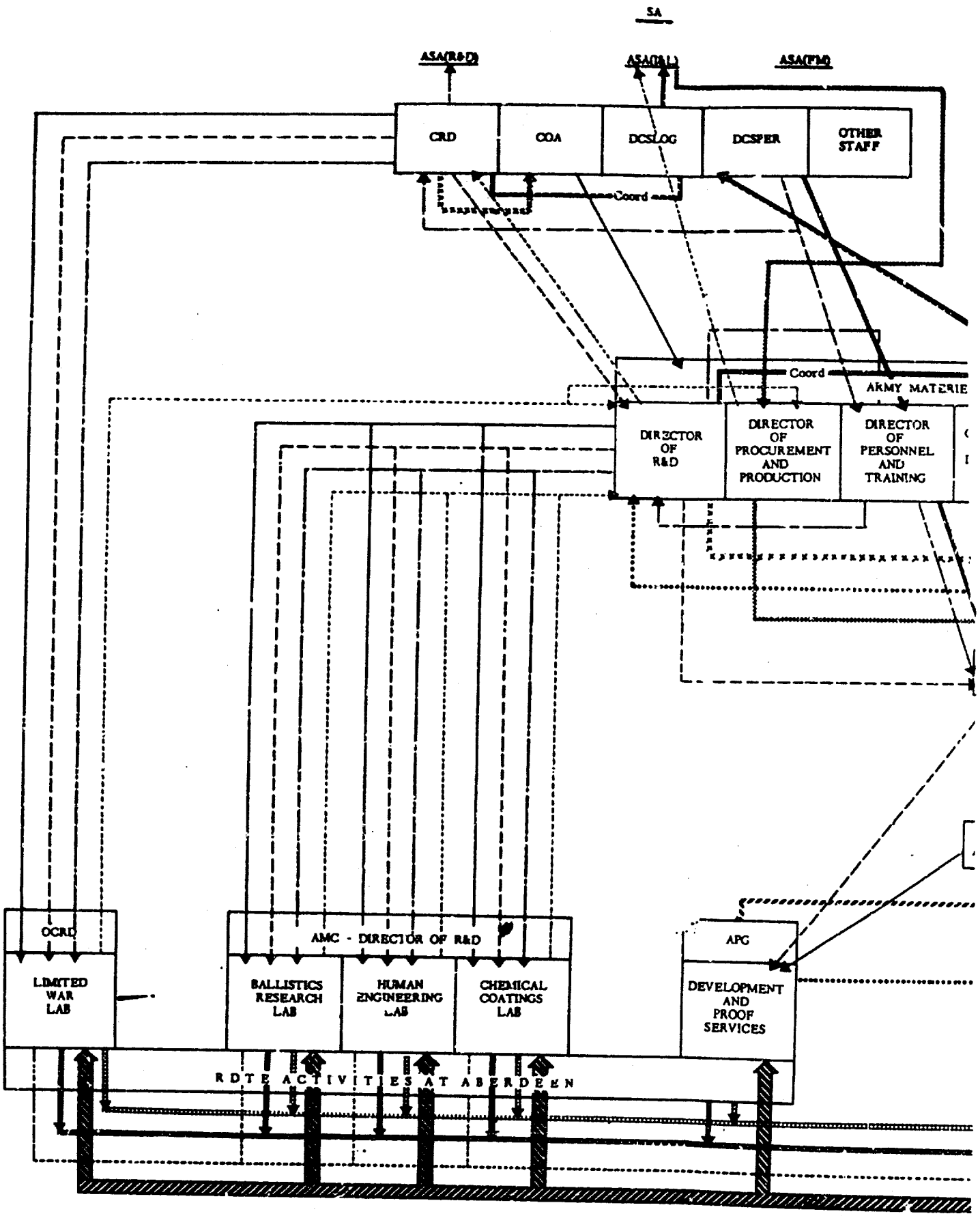

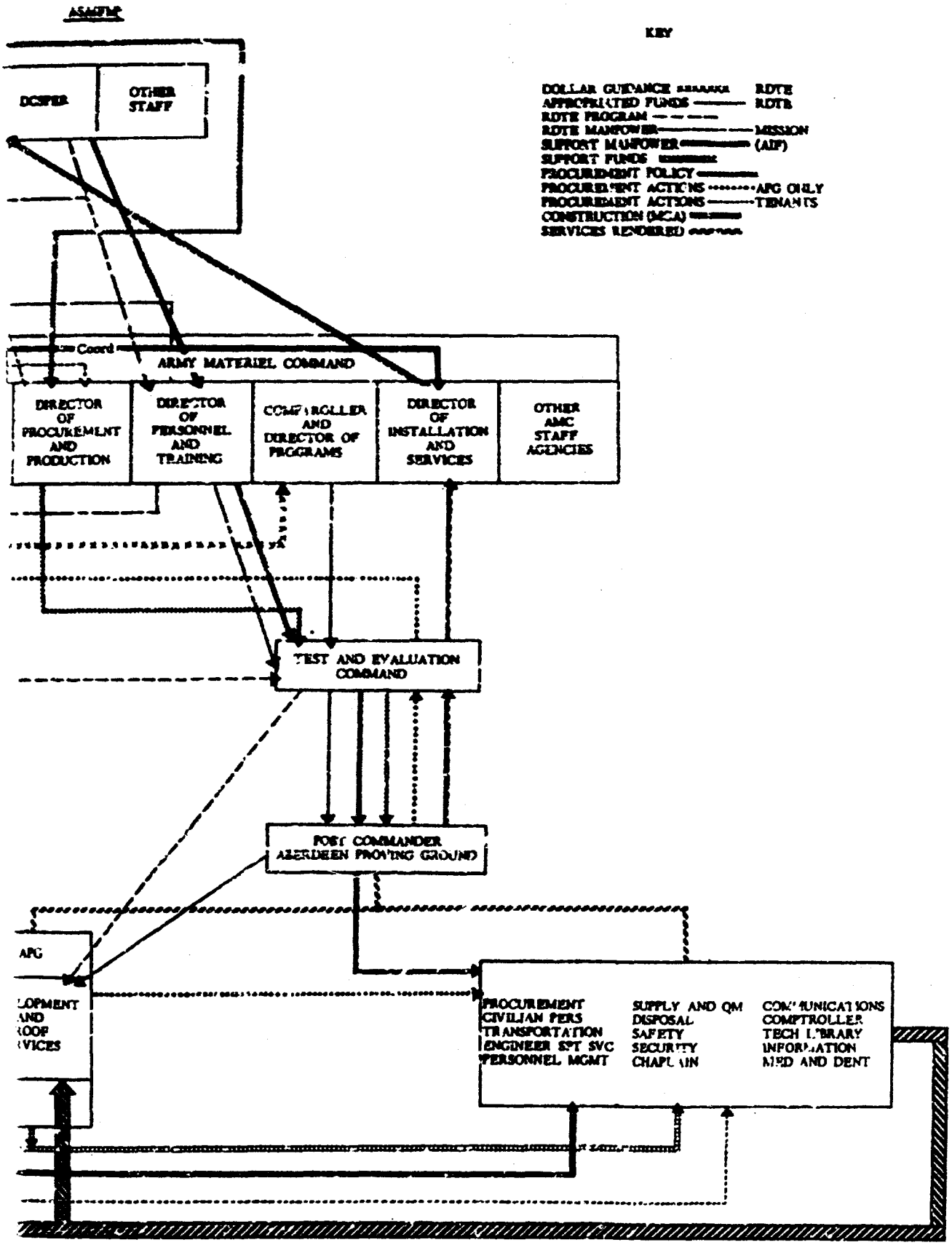
ASA(FM)
DCSPER
OTHER STAFF
KEY
DOLLAR GUIDANCE RDTE
APPROPRIATED FUNDS RDTE
RDTE PROGRAM
RDTE MANPOWER MISSION
SUPPORT MANPOWER (AIF)
SUPPORT FUNDS
PROCUREMENT POLICY
PROCUREMENT ACTIONS AFG ONLY
PROCUREMENT ACTIONS TENANTS
CONSTRUCTION (MCA)
SERVICES RENDERED
Coord
ARMY MATERIEL COMMAND
DIRECTOR OF PROCUREMENT AND PRODUCTION
DIRECTOR OF PERSONNEL AND TRAINING
COMPTROLLER AND DIRECTOR OF PROGRAMS
DIRECTOR OF INSTALLATION AND SERVICES
OTHER AMC STAFF AGENCIES
TEST AND EVALUATION COMMAND
POST COMMANDER ABERDEEN PROVING GROUND
AFG
PROCUREMENT
CIVILIAN PERS
TRANSPORTATION
ENGINEER SPT SVC
PERSONNEL MGMT
SUPPLY AND QM
DISPOSAL
SAFETY
SECURITY
CHAPLAIN
COMMUNICATIONS
COMPTROLLER
TECH LIBRARY
INFORMATION
MED AND DENT

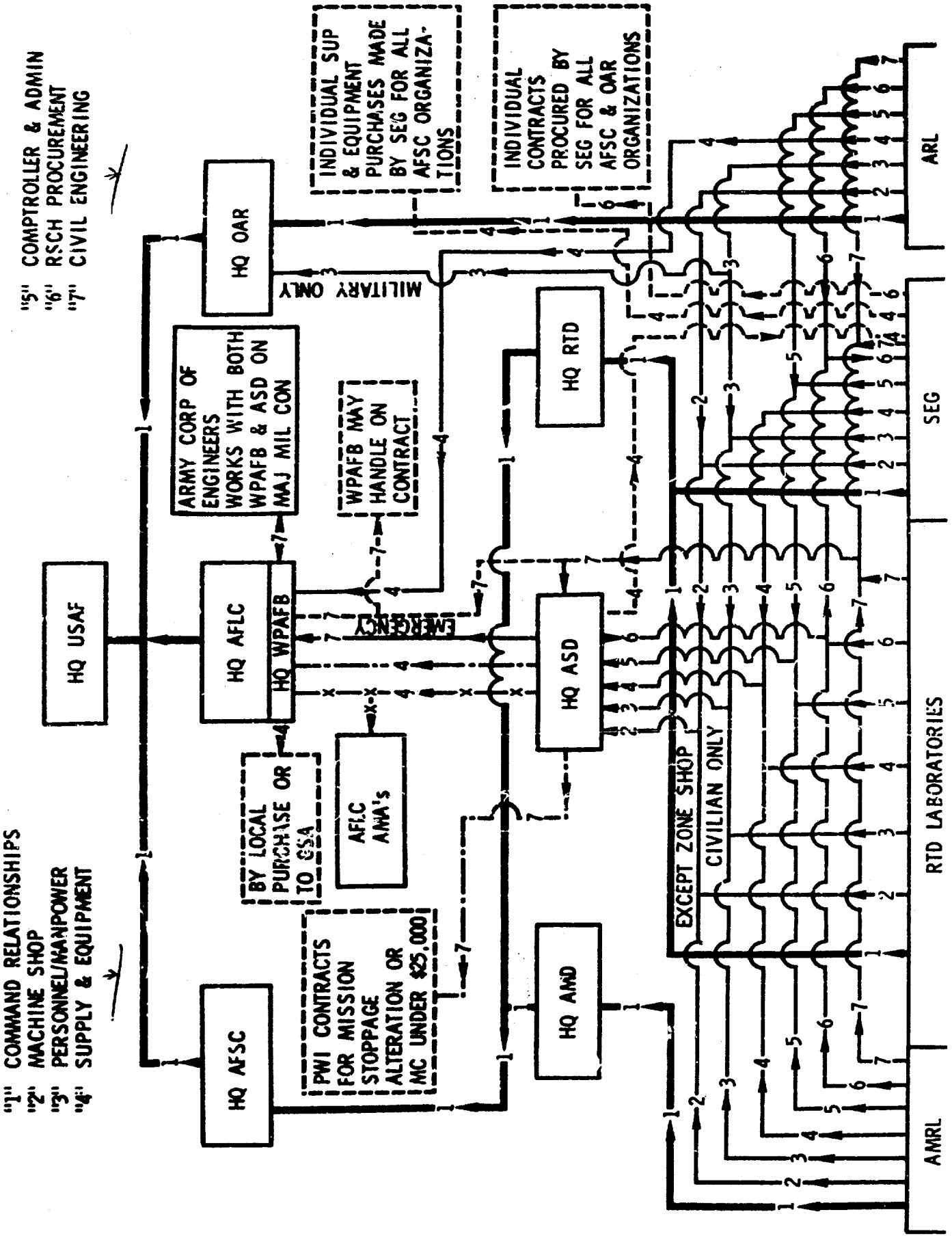
"1" COMMAND RELATIONSHIPS
"2" MACHINE SHOP
"3" PERSONNEL/MANPOWER
"4" SUPPLY & EQUIPMENT
"5" COMPTROLLER & ADMIN
"6" RSCH PROCUREMENT
"7" CIVIL ENGINEERING
HQ USAF
HQ AFSC
HQ AFLC
HQ WPAFB
HQ OAR
HQ RTD
HQ ASD
HQ AMD
ARMY CORP OF ENGINEERS WORKS WITH BOTH WPAFB & ASD ON MAJ MIL CON
WPAFB MAY HANDLE ON CONTRACT
INDIVIDUAL SUP & EQUIPMENT PURCHASES MADE BY SEG FOR ALL AFSC ORGANIZATIONS
INDIVIDUAL CONTRACTS PROCURED BY SEG FOR ALL AFSC & OAR ORGANIZATIONS
MILITARY ONLY
EMERGENCY
BY LOCAL PURCHASE OR TO GSA
AFLC AMA's
PWI CONTRACTS FOR MISSION STOPPAGE ALTERATION OR MC UNDER $25,000
EXCEPT ZONE SHOP
CIVILIAN ONLY
ARL
SEG
RTD LABORATORIES
AMRL

Figure 9

ABBREVIATIONS

AFLC	Air Force Logistics Command
AFM	Air Force Manual
AFR	Air Force Regulation
AFRCE	Air Force Regional Civil Engineer
AFSC	Air Force Systems Command
AIF	Army Industrial Fund
AMA	Air Materiel Area
AMC	Army Materiel Command
AMD	Aerospace Medical Division (AFSC)
AMRL	Aerospace Medical Research Laboratory
APG	Aberdeen Proving Ground
ARL	Aerospace Research Laboratories
ASA(FM)	Assistant Secretary of the Army (Financial Management)
ASA(I&L)	Assistant Secretary of the Army (Installations and Logistics)
ASA(R&D)	Assistant Secretary of the Army (Research and Development)
ASD	Aerospace Systems Division (Air Force)
ASD(Comp)	Assistant Secretary of Defense (Comptroller)
ASD(I&L)	Assistant Secretary of Defense (Installations and Logistics)
ASN(I&L)	Assistant Secretary of the Navy (Installations and Logistics)
ASN(R&D)	Assistant Secretary of the Navy (Research and Development)
BOB, BuBud	Bureau of the Budget
BuDocks	Bureau of Yards and Docks (Navy)
CAB	CNO Advisory Board
CNM	Chief, Naval Material
CNO	Chief of Naval Operations
COA	Comptroller of the Army
CRD	Chief, Research and Development (Army)
CSC	Civil Service Commission
CWE	current working estimate
DASD(P&I)	Deputy Assistant Secretary of Defense (Properties and Installations)
DCNO	Deputy Chief of Naval Operations
DCNO(Devel)	Deputy Chief of Naval Operations (Development)
DCNO(LOG)	Deputy Chief of Naval Operations (Logistics)
DDR&E	Director of Defense Research and Engineering
DCSLOG	Deputy Chief of Staff (Logistics)(Army)
DCSPER	Deputy Chief of Staff (Personnel)(Army)
DoD	Department of Defense
DoD-NASA Fac Coord Bd	DoD-NASA Facilities Coordinating Board
FEO	Field Engineering Office (Navy)
GSA	General Services Administration
HQ	Headquarters

IBM Corporation	International Business Machines Corporation
MC	military construction
MCP	military construction program
NASA	National Aeronautics and Space Administration
NAVCOMPT	Comptroller of the Navy
NRFRB	Naval Research Facilities Review Board
OAR	Office of Aerospace Research (Air Force)
OCRD	Office of Chief, Research and Development (Army)
ODDR&E	Office of the Director of Defense Research and Engineering
O&M	operations and maintenance
ONR	Office of Naval Research
OPNAV	Office of Chief of Naval Operations
OSD	Office of the Secretary of Defense
PCE	program cost estimate
PL, P.L.	Public Law
QM	Quartermaster
R&D	research and development
RDT&E, RDTE	research, development, test and evaluation
RTD	Research and Technology Division (AFSC)
SA	Secretary of the Army
SAF-FM	Assistant Secretary of the Air Force (Financial Managemen
SecAF	Secretary of the Air Force
SecDef	Secretary of Defense
SecNav	Secretary of the Navy
SEG	Systems Engineering Group (Air Force)
USAF	United States Air Force
WPAFB	Wright-Patterson Air Force Base