AD

AD 637159

USAAVLABS TECHNICAL REPORT 66-41

FEASIBILITY STUDY OF AN IN-FLIGHT FLAMEOUT AND ENGINE-OUT DETECTION SYSTEM

By

J. G. McMillan

A. L. Preston

June 1966

U. S. ARMY AVIATION MATERIEL LABORATORIES
FORT EUSTIS, VIRGINIA

CONTRACT DA 44-177-AMC-305(T)

HONEYWELL INC.
MINNEAPOLIS, MINNESOTA

Distribution of this document is unlimited

CLEARINGHOUSE
FOR FEDERAL SCIENTIFIC AND TECHNICAL INFORMATION

Hardcopy	Microfiche		
$2.00	$.50	45 pp	

1 ARCHIVE COPY

Disclaimers

The findings in this report are not to be construed as an official Department of the Army position unless so designated by other authorized documents.

When Government drawings, specifications, or other data are used for any purpose other than in connection with a definitely related Government procurement operation, the United States Government thereby incurs no responsibility nor any obligation whatsoever; and the fact that the Government may have formulated, furnished, or in any way supplied the said drawings, specifications, or other data is not to be regarded by implication or otherwise as in any manner licensing the holder or any other person or corporation, or conveying any rights or permission, to manufacture, use, or sell any patented invention that may in any way be related thereto.

Trade names cited in this report do not constitute an official endorsement or approval of the use of such commercial hardware or software.

Disposition Instructions

Destroy this report when no longer needed. Do not return it to the originator.

DEPARTMENT OF THE ARMY
U. S. ARMY AVIATION MATERIEL LABORATORIES
FORT EUSTIS, VIRGINIA 23604

This report represents the contractor's effort to determine optimum flameout parameters analytically and experimentally, to survey existing sensors, and to consider new concepts of sensing.

This effort resulted in the fabrication and testing of two in-flight flameout detectors for turbine engines: one electronic (ultraviolet tube) and one fluidic.

Both detectors have proved to be feasible. The electronic detector has a response time of 0.005 second; the fluidic detector, 0.020 second.

This command concurs with the contractor's conclusion that the electronic unit has an advantage for an immediate application. However, further research is necessary for the fluidic system.

Task 1M121401D14414
Contract DA 44-177-AMC-305(T)
USAAVLABS Technical Report 66-41
June 1966

FEASIBILITY STUDY OF AN IN-FLIGHT FLAMEOUT AND ENGINE-OUT DETECTION SYSTEM

Final Report
20324 FR

by

J. G. McMillan
A. L. Preston

Prepared by

Honeywell Inc.
Aeronautical Division
Minneapolis, Minnesota

for

U. S. ARMY AVIATION MATERIEL LABORATORIES
FORT EUSTIS, VIRGINIA

Distribution of this
document is unlimited

SUMMARY

The U. S. Army Aviation Materiel Laboratories sponsored an 8-month feasibility study for a flameout monitor for a gas turbine engine. The work was accomplished by the Aeronautical Division of Honeywell Inc. Contract specifications required that the flameout monitor respond to a loss of flame within 0.250 second. Honeywell has demonstrated that a system is possible which will respond to flameout within 0.050 second. During the course of the program, it was suggested by Honeywell that two systems, one electronic and one fluidic, be investigated.

Both the electronic and fluidic units have been breadboarded and tested on a J85-7 turbojet engine at Honeywell's Flight Operations Facility. The scope of the feasibility study did not include automatic relight; flame loss in the engine was indicated by a warning light on the control panel. However, nothing has been done to preclude the addition of an automatic relight circuit. In fact, it is perfectly feasible to add an automatic relight feature to the present prototype equipment.

FOREWORD

This document is the final report of an 8-month feasibility study of an in-flight flameout and engine-out detection system under United States Army Contract DA 44-177-AMC-305(T). The program was sponsored by the U. S. Army Aviation Materiel Laboratories and was directed by Mr. Meyer B. Salomonsky of the Aircraft Systems and Equipment Division. The program was conducted by the Instruments Department of the Aeronautical Division of Honeywell Inc., Minneapolis, Minnesota. The project engineer responsible for the program at Honeywell was Mr. E. G. Johnson. Consulting service was provided by the Honeywell Corporate Research Center.

The objective of this program was to devise a flameout detection system for gas turbine engines. During the course of the study, it was determined that two different systems, one fluidic and one electronic, should be investigated and tested. Final testing indicates that both systems meet contract specifications regarding time of response and that each system has certain inherent advantages.

CONTENTS

	Page
SUMMARY	iii
FOREWORD	v
LIST OF ILLUSTRATIONS	viii
INTRODUCTION	1
TECHNICAL DISCUSSION	2
CDP Rate	3
Combustion Chamber Temperature	6
Combustion Chamber Flame	6
Electronic System	7
Fluid System	11
Temperature Sensor	11
Coupler and Frequency Discriminator	11
Fluid to Electric Switch	12
Development and Test Program	12
ENGINE TEST PROGRAM	26
Electronic System	26
Fluid System	26
Electronic and Fluidic Systems Operating Together on the Engine	27
CONCLUSIONS	34
DISTRIBUTION	35

BLANK PAGE

ILLUSTRATIONS

Figure		Page
1	CDP Rate for Low Altitudes	4
2	Typical Compressor Map - Sea Level Static Conditions	5
3	Sketch of Electronic Flame Sensor Tube Holder Installation	8
4	Flameout Monitor Circuitry Package	9
5	Flameout Monitor Circuitry Package Disassembled	9
6	Flameout Monitor Components	10
7	Circuit Diagram for Original Breadboard Flameout Monitor	11
8	Original Breadboard Flameout Monitor	14
9	Circuit Schematic for Flameout Monitor (3.5 kc)	15
10	Sketch of Test Setup	16
11	Production-Type Tube Operating at 1 kc	17
12	Production-Type Tube Operating at 3.5 kc	17
13	Ruggedized Tube Operating at 1 kc	18
14	Ruggedized Tube Operating at 3.5 kc	18
15	Typical Resonator Characteristics	19
16	Frequency Discriminator Characteristics	19
17	Frequency Versus Temperature	20
18	Fluid Flameout Monitor Schematic	21
19	Stepped Resonance Tube	22
20	Bypass Filter Characteristics	22
21	Frequency Discriminator Sketch	23

Figure		Page
22	Fluid Frequency Discriminator Characteristics	23
23	Early Discriminator and Switch	24
24	Capacitance Switch	24
25	Final Switch Configuration	25
26	Electronic System Mounted on J85-7 Engine	28
27	Flameout Monitor Mounted on J85-7 Engine	29
28	Fluid Flameout Monitor	29
29	Fluid and Electronic Systems Mounted on J85-7 Engine	30
30	Recorder Used for Determining Response Time	30
31	Electronic and Fluid Systems Operation During Startup	31
32	Electronic and Fluid Systems Operation Between Idle and Military Settings	32
33	Response of Electronic and Fluid Systems to Simulated Flameout	33

INTRODUCTION

Flameout in turbine-powered aircraft can precipitate a catastrophic failure under certain conditions. A system that indicates flameout to the pilot as soon as it occurs and at the same time initiates corrective action would be extremely valuable in a wide range of applications. For instance, consider the hover mode of a VTOL aircraft such as the XV-5A, or a low-flying helicopter in combat conditions.

If flameout occurred in a low-flying helicopter, the igniters would be turned on automatically and a warning signal relayed to the cockpit. If the warning signal continued indicating no relight, the pilot could then initiate autorotation in time for a safe landing.

In a VTOL type aircraft, the failure of any one engine can produce a violent pitching or rolling moment. This type of aircraft usually operates with the igniters on continuously. However, if the flame failed for any reason (loss of fuel, etc.), the flameout monitor would give immediate warning, allowing the pilot to escape before complete loss of power in one portion of the aircraft occurred.

Fast response of the flameout sensor is necessary, since the engine speed must not be allowed to decrease appreciably before action is taken. If the igniters are turned on immediately after flame loss has occurred, a relight should be possible without going through the entire restart procedure. The cockpit warning will serve to advise the pilot that flameout has occurred; and even if relight is accomplished, he will be aware that a problem may exist.

BLANK PAGE

TECHNICAL DISCUSSION

Honeywell's program was carried out in the following steps:

- Analytical and experimental determination of optimum flameout sensitive parameters
- Industry survey of existing sensors or components suitable for flameout monitor applications
- Laboratory development of both a fluidic and an electronic flameout monitor
- Engine tests of both systems

The following is a brief résumé of Honeywell's philosophy and considerations regarding engine parameters indicative of flame loss.

Engine flameout is indicated by a loss of output from the engine or any of its major components. For instance, engine pressure ratio or thrust will initially drop along a constant speed line, or compressor discharge pressure and burner temperature will fall suddenly when engine flameout is experienced. A brief description of changes which occur in various component parameters when flameout occurs, and the suitability of these changes for use in a sensor are discussed in the following paragraphs.

- Engine Speed

  When flameout occurs, engine rotor speed decreases. However, due to the inertia of the rotor, this decrease is not fast enough to meet specifications.

- Compressor Discharge Pressure (CDP) Rate

  When flameout occurs, the back pressure on the compressor due to combustion is removed. This results effectively in a reduction of pressure (ΔP) at the compressor discharge. A problem in using this parameter is that the drop in pressure due to a flameout at altitude may be less than the drop in pressure due to a throttle chop at sea level. Consequently, a sensor of this type might not be able to distinguish between a throttle chop and an engine out. A system sensing the ΔP across the compressor will have the same limitation.

- Differential Pressure (ΔP) Across the Turbine

  This system operates about the same as the CDP rate system except that it is less responsive to throttle chop or flameout.

- Turbine Discharge Temperature

  When flameout occurs, the exhaust gas temperature falls off very rapidly. The temperature drop due to flameout is considerably greater than for a throttle chop and is fast enough to meet contract specifications.

- Turbine Inlet Temperature or Burner Temperature

  Flameout indicators in this area are faster than at the turbine discharge, since the sensing is accomplished in the immediate area where the flameout occurs. Conventional sensors are not practical in this area owing to the high temperature environment. The advantages to be gained by sensing in the area of the flame or further downstream in the turbine inlet area are great with regard to response and sensitivity.

  A fluid temperature sensor located in the hot gas stream has the ability to withstand the hostile environment and to provide the necessary response. Reliability of this sensor is very high. A flame-sensitive power tube also has good response to flameout and can be located in the engine case, in a tolerable environment, and still be able to "see" the flame.

  For the purposes of a flameout sensor, it was decided to evaluate three different approaches: burner temperature drop, CDP rate, and flame loss.

CDP RATE

The CDP rate sensing system appears to have at least two serious drawbacks. The CDP rate after a throttle chop at sea level is nearly the same as the CDP rate after flameout at 10,000 feet (see Figure 1). The curves in Figure 1 were generated by extrapolating throttle-chop data from a sea-level static test of a turbojet engine. The flameout curve was estimated. The altitude curves were derived from known compressor performance at sea level conditions. The compressor map (Figure 2) is for a typical turbojet engine and includes estimated deceleration lines.

At higher altitudes, flameout could not be recognized without compensation. Also, the curves in Figure 1 show throttle chop and flameout starting at full military thrust conditions. If flameout occurs during or after throttle chop, which is a more likely possibility, the CDP rate will be less than that from military setting, since the slope of the steady-state operating line is lower at slow speeds than it is at higher speeds. It is true that during a deceleration or a flameout condition, the engine will not follow the steady-state operating line, but will operate along a lower line, as shown on Figure 2. Note that both the deceleration line and the flameout line are substantially parallel to the steady-state

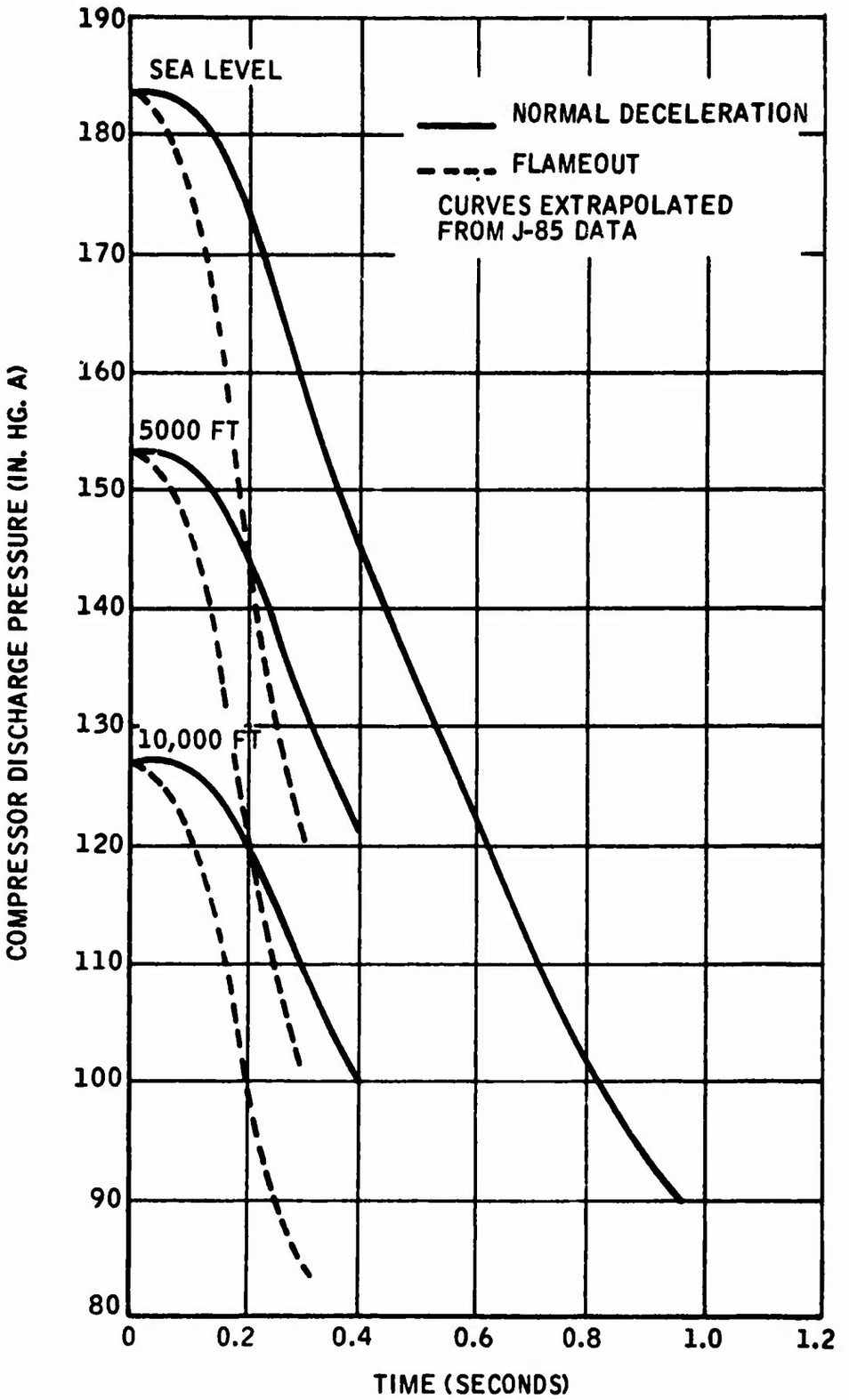

Figure 1. CDP Rate for Low Altitudes

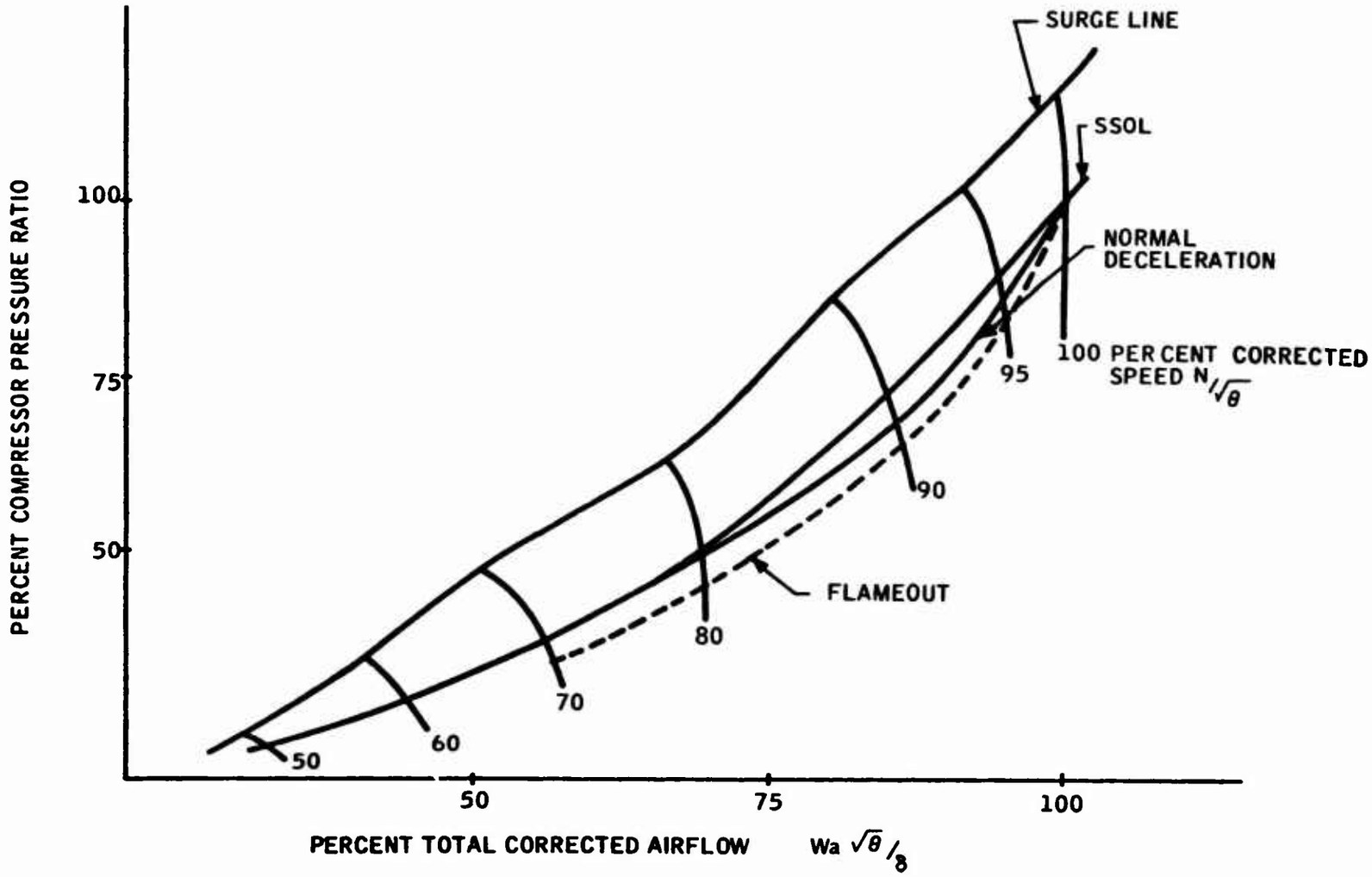

Figure 2. Typical Compressor Map - Sea Level Static Conditions

operating line. The operating lines shown on this map represent an assumed engine with some form of variable compressor geometry. Without variable geometry, the operating line is similar, except that the change in slope is not so great.

COMBUSTION CHAMBER TEMPERATURE

The combustion chamber temperature is a useful parameter since it will drop rapidly when a flameout occurs. Thermocouples which are sufficiently rugged for this application are not available with a fast enough response to follow this temperature change. However, it was felt that a fluid device could be built which would be satisfactory. Since the response was determined to be adequate to meet contract specifications, it was decided that a fluid burner temperature sensor would be tested for flameout sensor applications. A complete description of the device and its operation is given later in the report.

COMBUSTION CHAMBER FLAME

Since we are actually trying to sense the loss of flame in the burner, an optical device which "sees" combustion appeared to be an ideal sensor. However, most optical and electronic devices presently on the market are also sensitive to the heat or color of the surroundings as well as to the flame itself. Honeywell's Research Center has developed several flame-sensitive devices. Some of these have recently gone into production and others are now in the pilot production stage. Because of the availability of these tubes, it was felt that a burner flame sensor was possible which would have sufficient response to meet contract specifications.

Twelve other companies were contacted regarding flame sensors suitable for the needs of this contract. All companies except one returned a "no bid" response. The sensor of the responding company was, however, too slow to meet contract specifications. Honeywell Research Center did provide a number of tubes for testing. Two of these flame-sensitive tubes were production models, one a self-quench bromine tube and the other a power tube. Also, several ruggedized power tubes still in development were supplied. During the laboratory investigations of the flameout monitor, it was determined that both the electronic and the fluidic systems had considerable merit. This matter was discussed with the Army program monitor, and it was decided that Honeywell would investigate both the fluidic and the electronic systems for engine evaluation at no additional cost to the contract.

While both systems accomplish the same objective, their operation is quite different. The fluidic system senses the temperature of the hot gas and determines whether or not the temperature is sufficiently high for combustion. The electronic system actually "looks" at the flame with a flame-sensitive power tube to determine if the flame is either on or off. Since the operation of the two units is different, a separate discussion of the technical details of each follows.

ELECTRONIC SYSTEM

This system of electronic flameout monitoring is built around the flame-sensitive power tube. This tube "looks" in at the flame in the burner through a quartz window. A sketch of the engine installation is shown in Figure 3. When the flame-sensitive power tube "sees" a flame in the burner, no signal is produced. However, when flameout occurs, an indicator light is energized to simulate a cockpit warning or some other output signal. The electronic logic circuitry is contained in a small package shown in Figures 4 and 5. All of the components involved in the system are shown in Figure 6.

Several different circuit arrangements were tried during the course of the feasibility studies. Simplicity, ruggedness, size, and operating characteristics were considered. Figure 7 shows a very simple circuit which operates on 60-cycle 110-volt power. A rather large transformer and a relay were necessary in order to operate the warning device (light). A breadboard model of this circuit is shown in Figure 8. While satisfactory operation of this circuit was realized, it was felt that a smaller, more compact unit was possible. A circuit using d-c power with a square wave inverter was tried and proven successful. The square wave inverter frequency can be varied by changing the turns ratio on the magnetic core. Two frequencies were tried and both worked satisfactorily. A schematic drawing of this circuit is shown in Figure 9. Switching is accomplished by the two transistors on the right side of Figure 9 (Q_1 and Q_2). With no current across the tube, transistor Q_1 keeps the warning light on. When current passes across the tube, indicating flame, transistor Q_2 turns Q_1 off, thereby switching the light off.

In order to determine accurately the response time of the system and to evaluate properly the circuit design, a test fixture was fabricated. A sketch of the test setup is shown in Figure 10. A fully synchronized camera shutter was electrically connected to one channel of a Sanborn recorder, and the sensor output was electrically connected to the other channel. Flameout was then simulated by closing the shutter.

Two different flame-sensitive power tubes were used for the tests, and each was operated at frequencies of 1000 and 3500 cps. The first tube tested was a production model; the results are shown in Figures 11 and 12. The other tube was a recently developed ruggedized version of the production tube; the results of these tests are shown in Figures 13 and 14. No attempt has been made to optimize the tube and circuit combination.

Figure 11 shows the production tube operating at 1 kc with a response to flameout of 0.01 second. Figure 12 shows that the higher frequency circuit gives a slower response. The performance of the ruggedized tube operating at 1 kc is shown in Figure 13. A response of 0.005 second is indicated. The same tube operating at 3.5 kc with a response time of 0.015 second is shown in Figure 14.

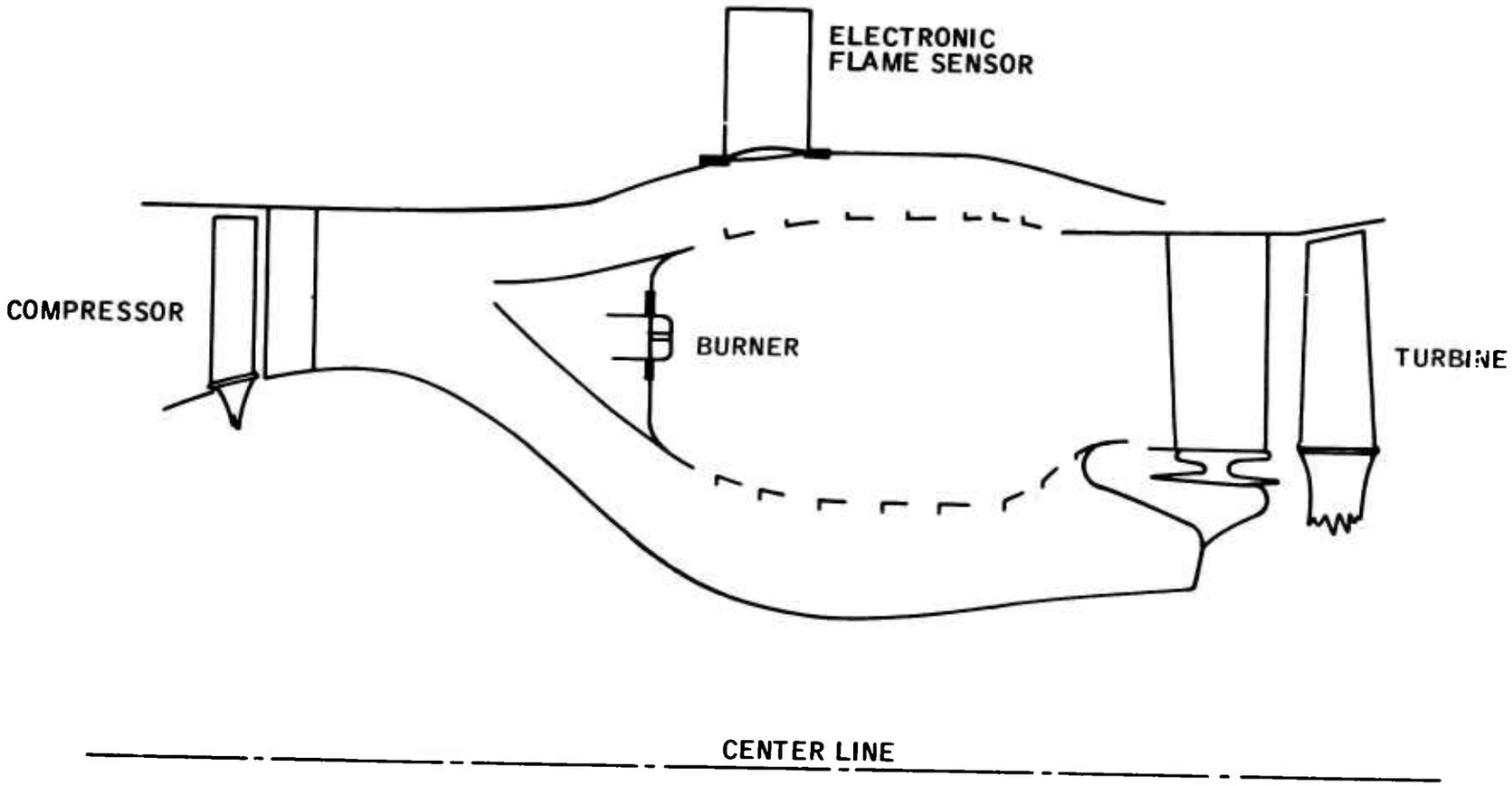

Figure 3. Sketch of Electronic Flame Sensor Tube Holder Installation

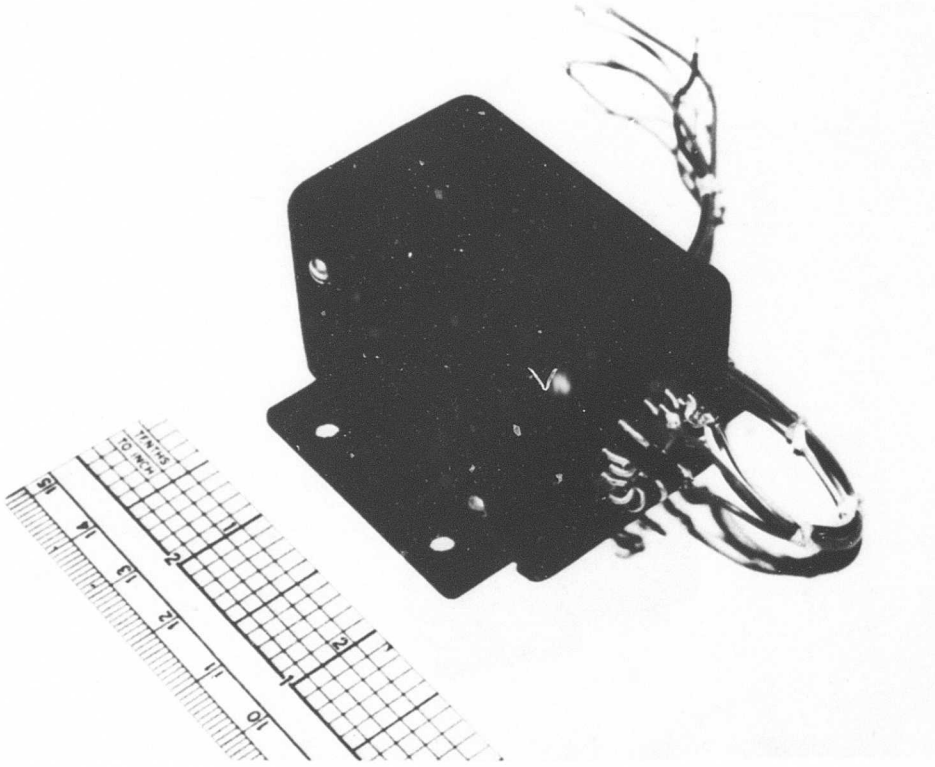

Figure 4. Flameout Monitor Circuitry Package

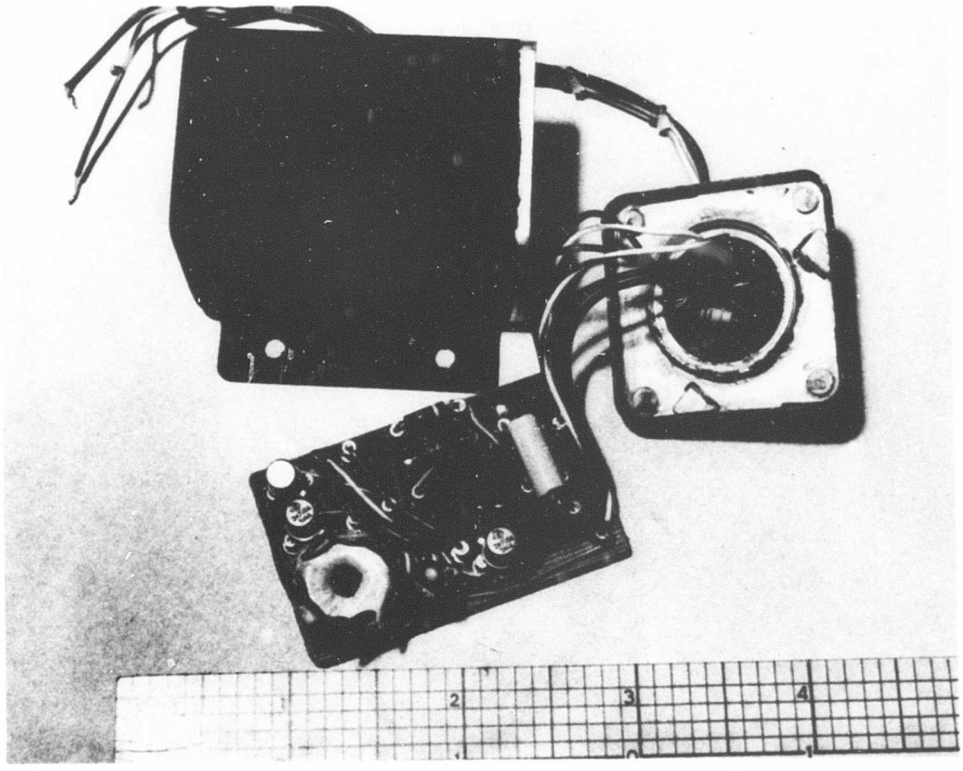

Figure 5. Flameout Monitor Circuitry Package Disassembled

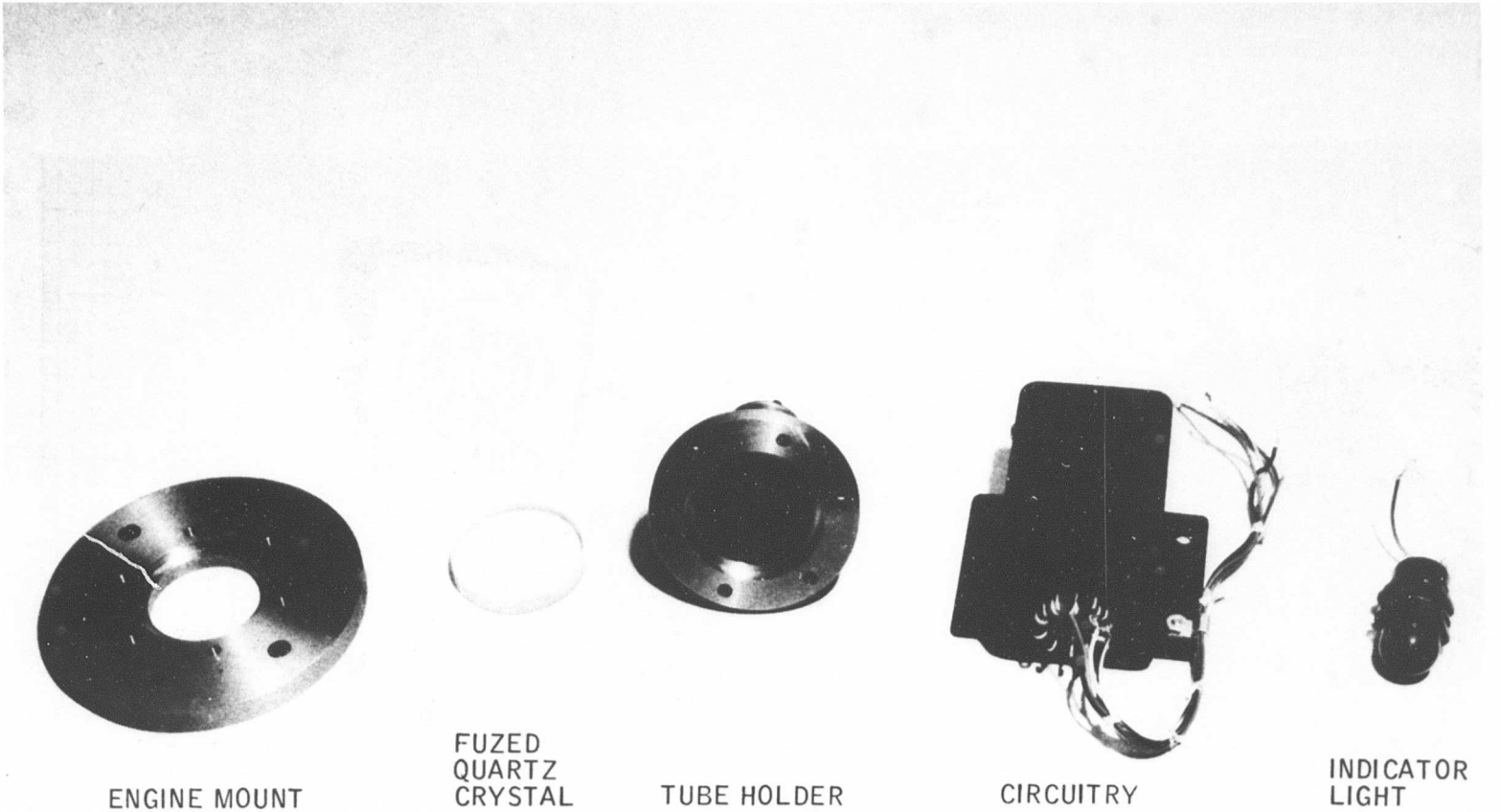

Figure 6. Flameout Monitor Components

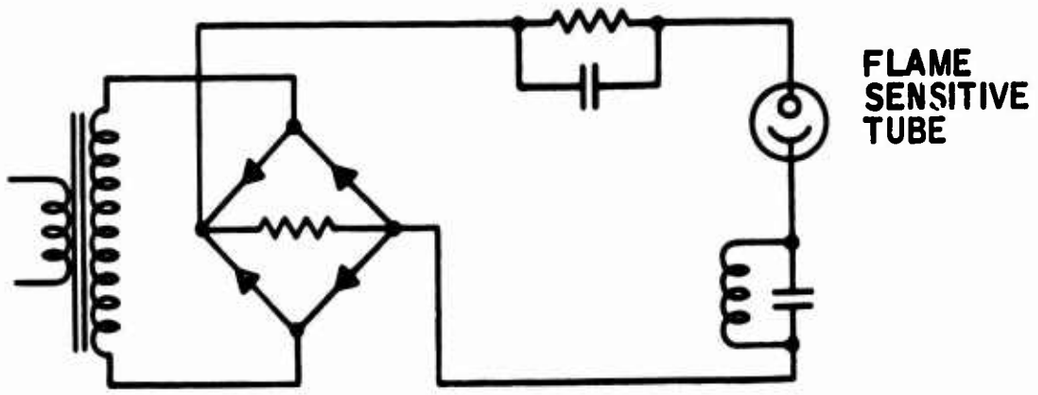

Figure 7. Circuit Diagram for Original Breadboard Flameout Monitor

FLUID SYSTEM

The fluidic flameout monitor is composed of four basic elements. The system is designed around the fluid temperature sensor. The other components are a coupler, a frequency discriminator, and a switch. A brief description of the basic operation of each component will be included here as an aid in understanding the system.

Temperature Sensor

The fluid temperature sensor is simply a temperature-sensitive fluid oscillator. The hot gas whose temperature is to be measured impinges on a fixed splitter and is forced to oscillate between two cavities which provide a low impedance path for the hot gas. The cavity size sets the length of the path that the gas will follow. Since the gas pulse will travel at the acoustic velocity, c, the oscillating frequency is a function of $\sqrt{T}$.

Recall that $c = \sqrt{KRT}$ where

K = adiabatic exponent

R = gas constant

T = absolute temperature of the inlet gas

Since K and R are known and are constant in the range of gas turbine engine operation, the frequency becomes a function of $\sqrt{T}$.

Coupler and Frequency Discriminator

To be useful, the pneumatic frequency signal of the temperature sensor must be converted to a usable signal. The pulsing pneumatic signal

is converted into an acoustic signal by means of a coupler. In this way, the hot gas of the sensor is not injected into the frequency discrimination system. The acoustic output of the sensor is fed into a resonator (frequency discriminator), which changes the variable frequency signal into an acoustic signal having output amplitude as a function of frequency. The resonator may be a tuned cavity of length equal to one-half the wavelength of the acoustic signal. A typical resonator and its characteristics are shown in Figure 15. For this study, a broad-band frequency discriminator was developed. The object here was to produce a signal which gave high amplitude over a wide operating range such as that shown in Figure 16.

Fluid to Electric Switch

In order to present a warning signal or to energize some corrective action device, a fluid-to-electrical interface must exist. Since the warning or corrective action signal will be of the on-off nature, it was felt that a bistable fluid amplifier would give satisfactory operation.

Development and Test Program

The fluid temperature sensor used in this program was identical to that developed for the Air Force under contract AF 33(657)-10787. It was used in this case to sense the combustion chamber temperature. As mentioned earlier, the output is a frequency proportional to the burner temperature. Figure 17 is a graph showing this relationship. The hot burner gas is sampled with a straight probe inserted into the burner through an inspection port. A schematic sketch of the installation with the fluid logic circuitry is shown in Figure 18.

The hot combustion gas being expelled through the temperature sensor is carrying an acoustic frequency proportional to the gas temperature. Since we are interested only in the frequency signal, the hot gas is separated from the signal by means of the coupler (see Figure 18). It is not desirable to have hot gas in the frequency discriminator, since this will affect pulse propagation through the discriminator.

Originally it was intended to implement the frequency discriminator with a "stepped" resonance tube as shown in Figure 19. Honeywell felt that by proper selection of the reflecting face lengths, an output approximating a high-pass filter could be designed as shown in Figure 20. The resonator was sized so that under all normal engine operating conditions the output of the resonator will be at the high amplitude output. When a flameout occurs, the output amplitude of the resonator will fall to a low value. This scheme, however, did not prove to be successful. The resonator picked the frequency associated with the step of greatest area, or some average, and did not produce broad-band discrimination. A device incorporating a bistable fluid amplifier was tried, and showed much promise. A

sketch of this device is shown in Figure 21. While the theory of operation is not completely understood, a description of its operating characteristics and performance follows.

The combination of input port lengths L_1, L_2 and L_3 determines the operating (resonating) range of the discriminator. When the frequency signal from the temperature sensor is high enough (burner operating temperature), resonance is realized. This resonance in the input ports causes the flow to switch to the left leg. Length L_3 affects the low-frequency operation of the device and is the length which determines the switch point (see Figure 22). Length L_2 determines maximum operating frequency (temperature) of the discriminator, while L_1 keeps the mid-range output level at a high value. The tubing connecting the bleed ports increases the output pressure level. Future development and increased amplification of the flame or flameout signals will probably eliminate the need for this tubing.

The development of a fluid-electric switch for operating the flameout warning light caused more trouble than was expected. An early discriminator switch combination is shown in Figure 23. Here the flapper at the bottom of the bistable amplifier was deflected when the flow was in the left channel. Vibration sensitivity and poor electrical contact made this scheme undesirable.

The capacitance type switch shown in Figure 24 was also tried. In it, a pressure signal deflects a diaphragm, thereby changing the electrical capacitance of the chamber. An electronic circuit senses the change in capacitance and transmits an electrical signal to a suitable indicator. While the sensitivity of the switch was good, it was felt that the electronics involved were too complicated for this application.

A sketch of the final switch configuration is shown in Figure 25. It is basically a bistable fluid amplifier with the divider pivoted as shown. When a loss of flame occurs, the flame signal drops and the divider is pulled over the left-hand contact. A light and battery are attached to the divider and the contact so that when flameout occurs a signal is indicated.

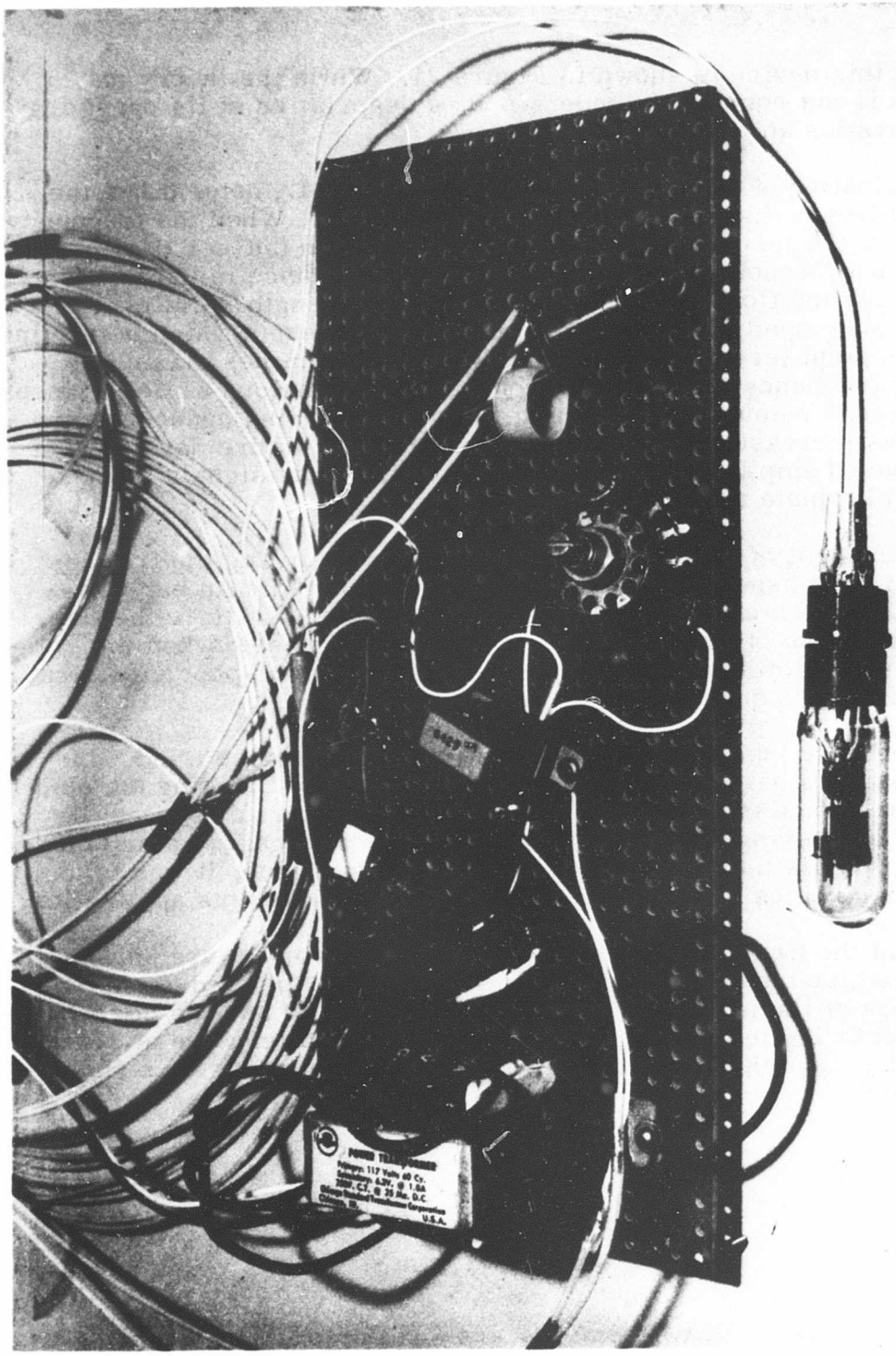

Figure 8. Original Breadboard Flameout Monitor

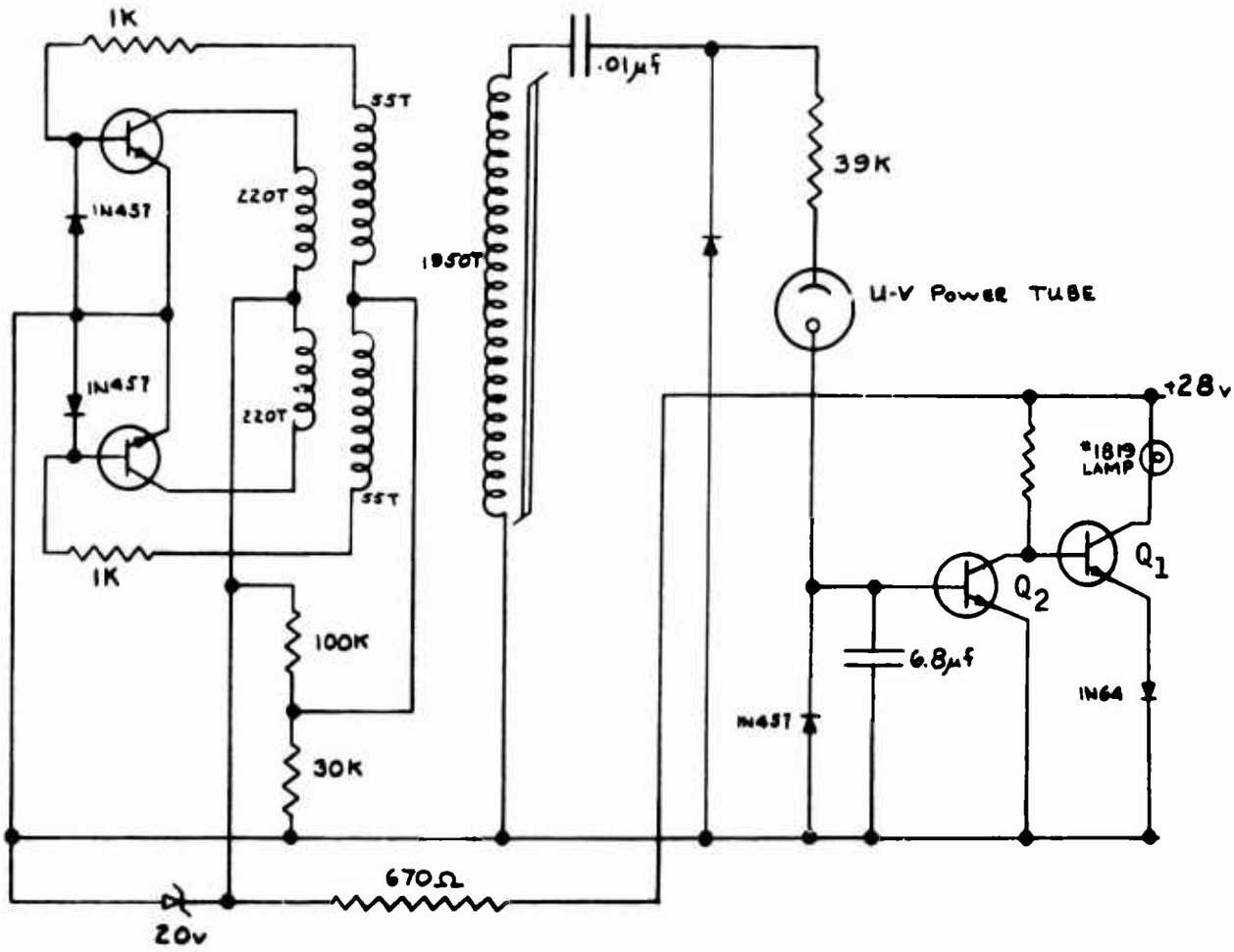

Figure 9. Circuit Schematic for Flameout Monitor (3.5 kc)

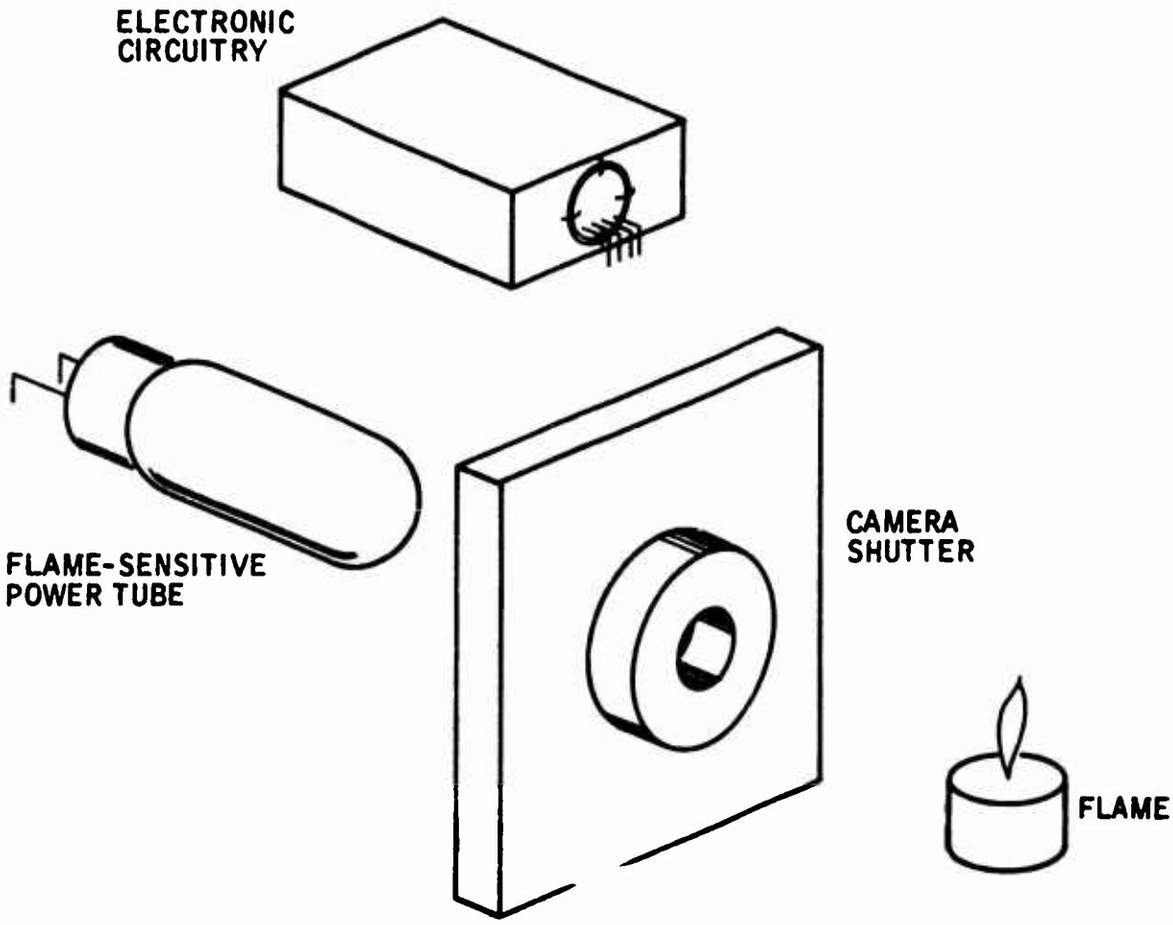

Figure 10. Sketch of Test Setup

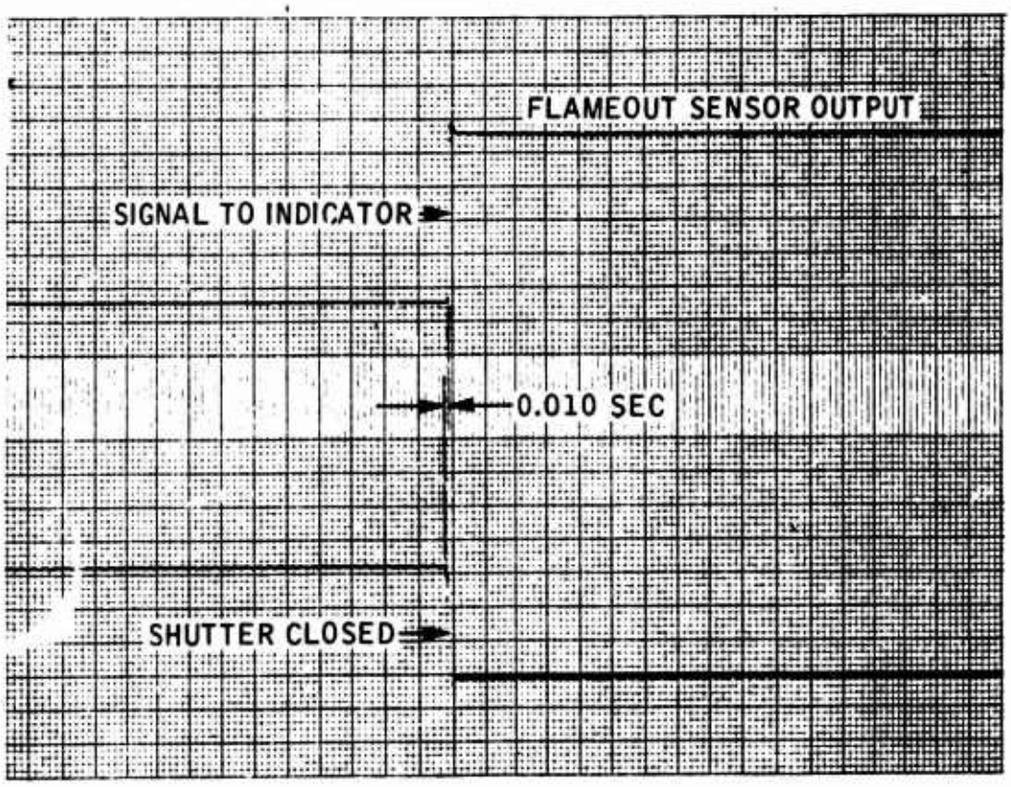

Figure 11. Production-Type Tube Operating at 1 kc

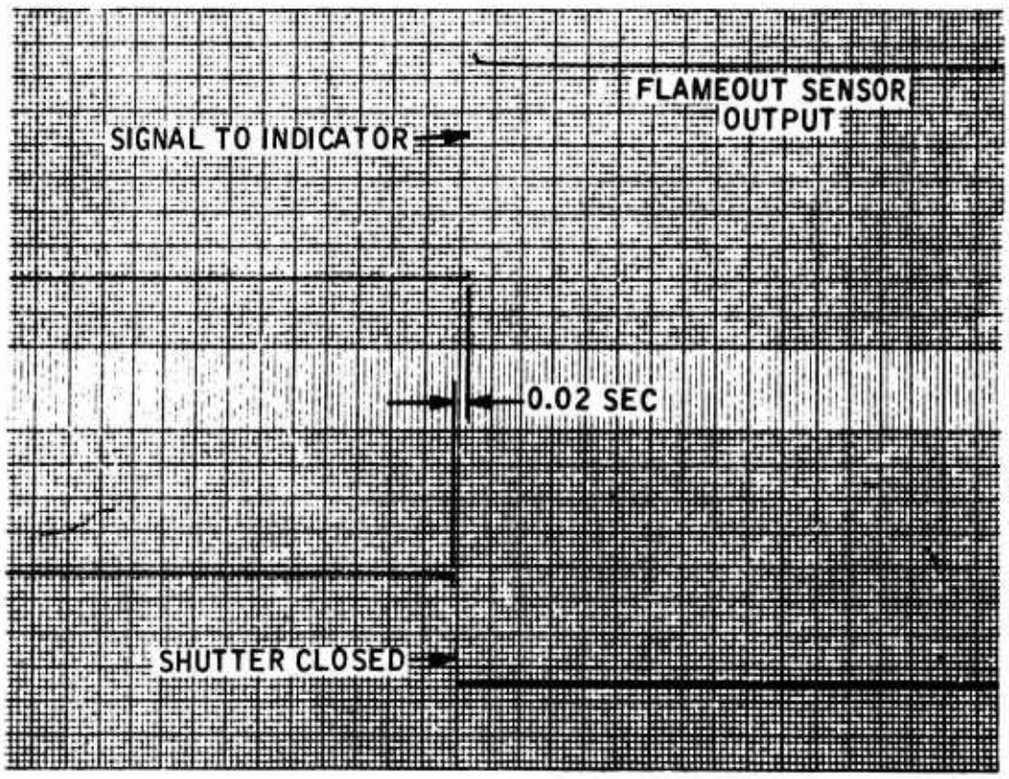

Figure 12. Production-Type Tube Operating at 3.5 kc

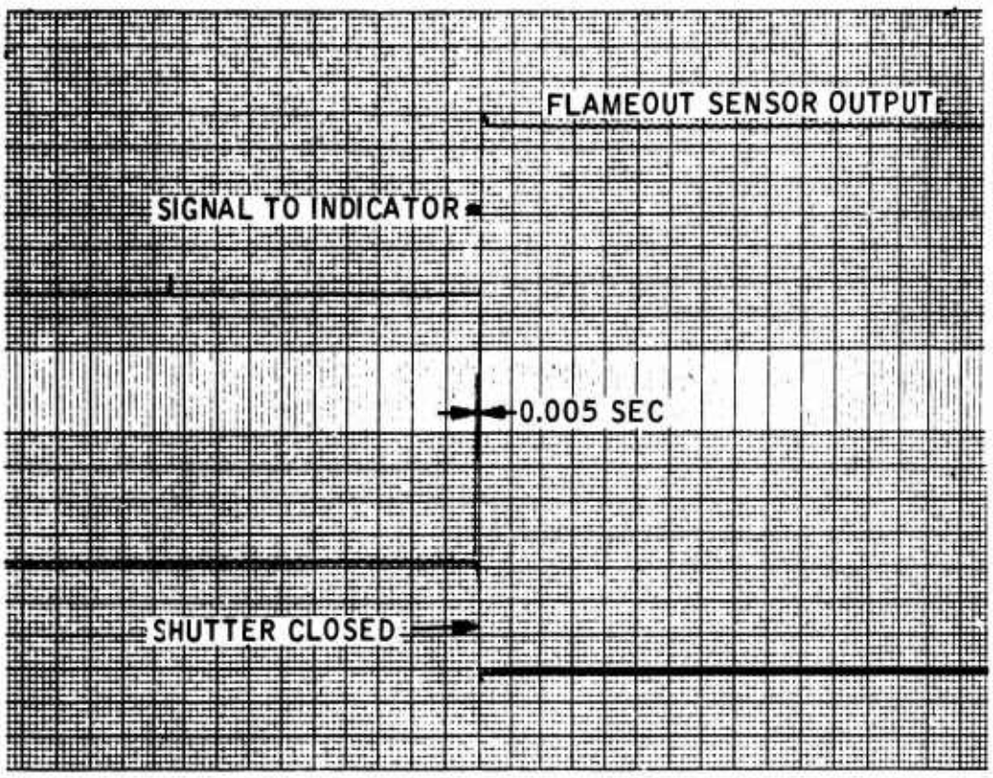

Figure 13. Ruggedized Tube Operating at 1 kc

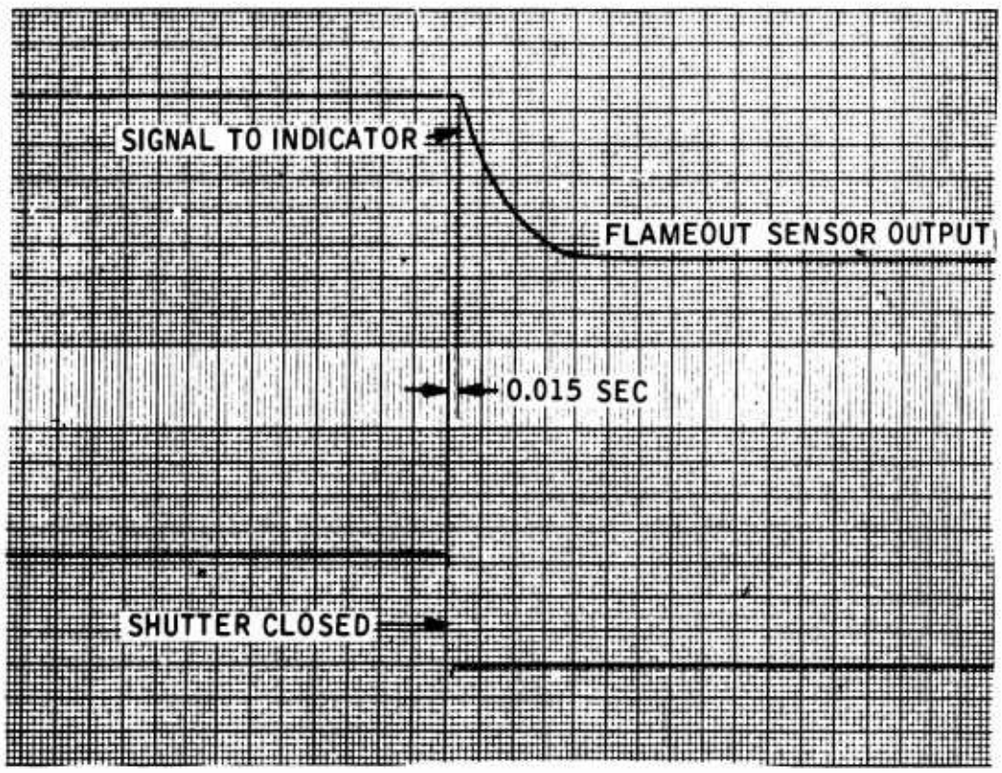

Figure 14. Ruggedized Tube Operating at 3. 5 kc

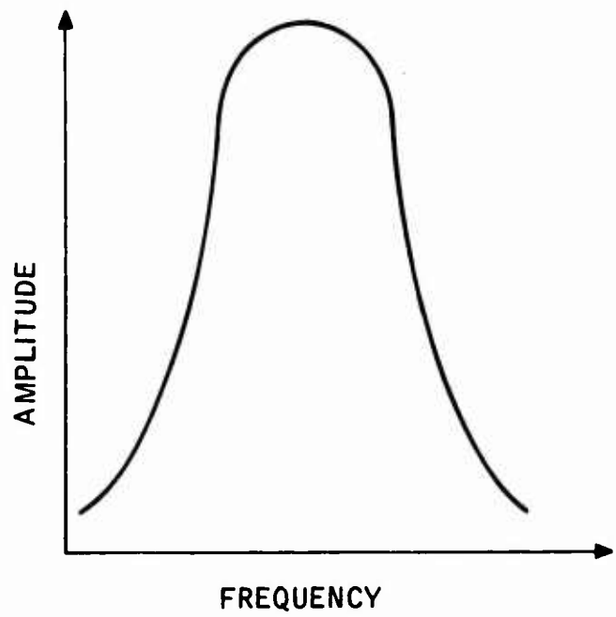

Figure 15. Typical Resonator Characteristics

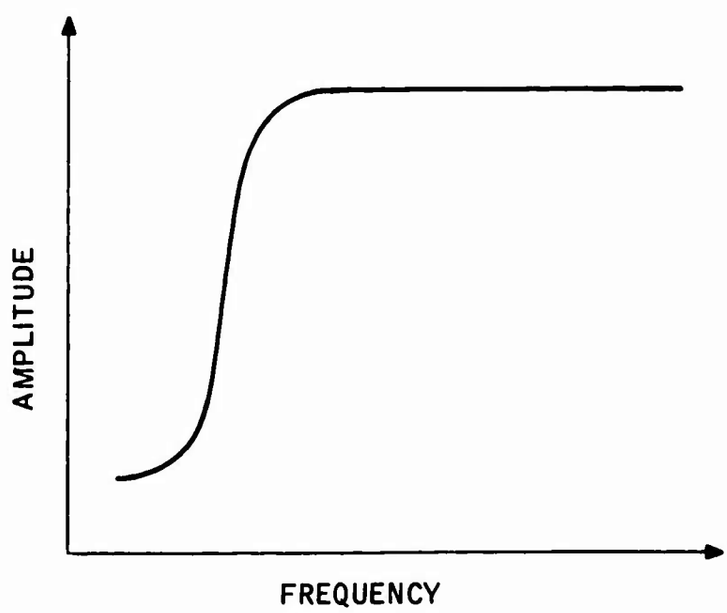

Figure 16. Frequency Discriminator Characteristics

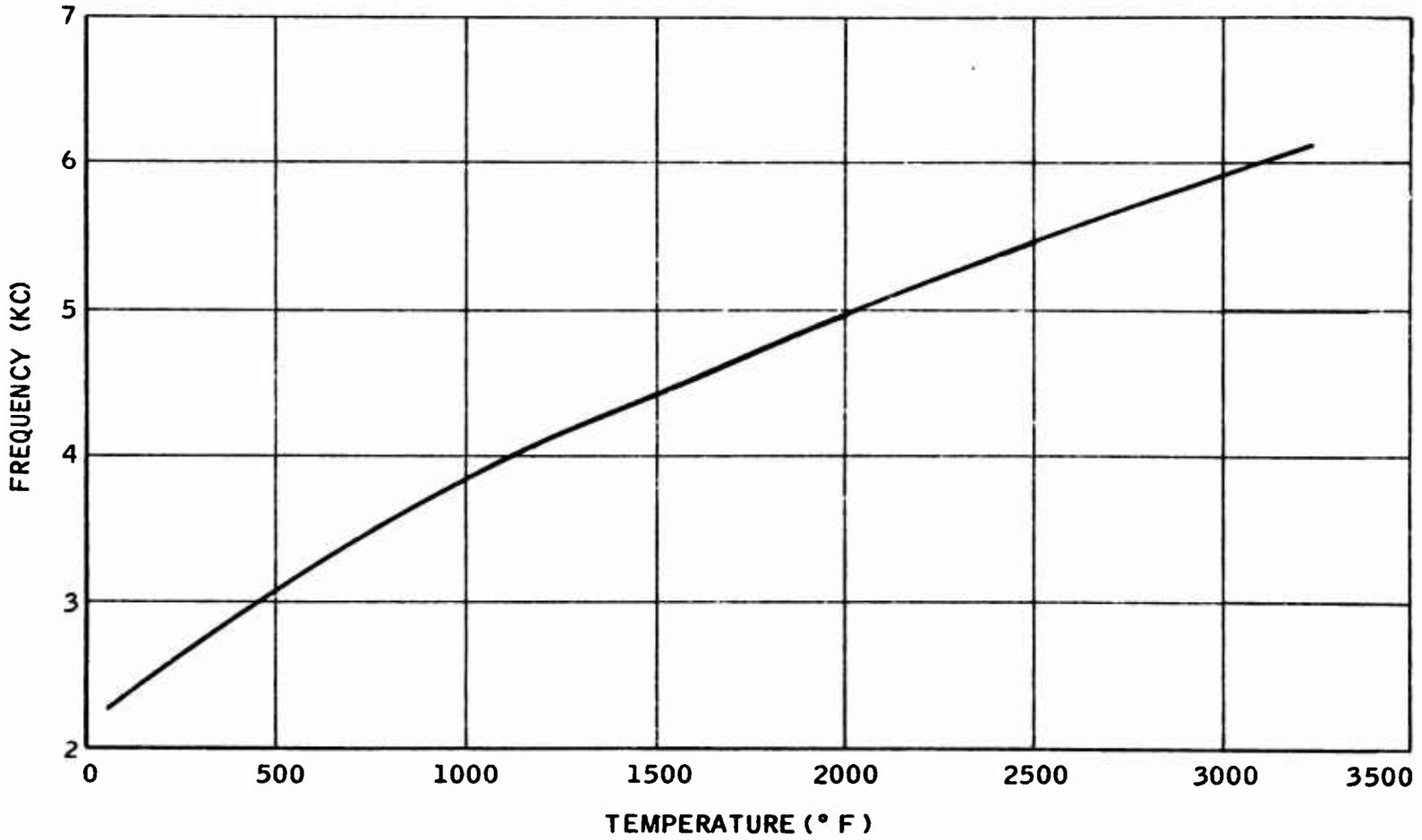

Figure 17. Frequency Versus Temperature

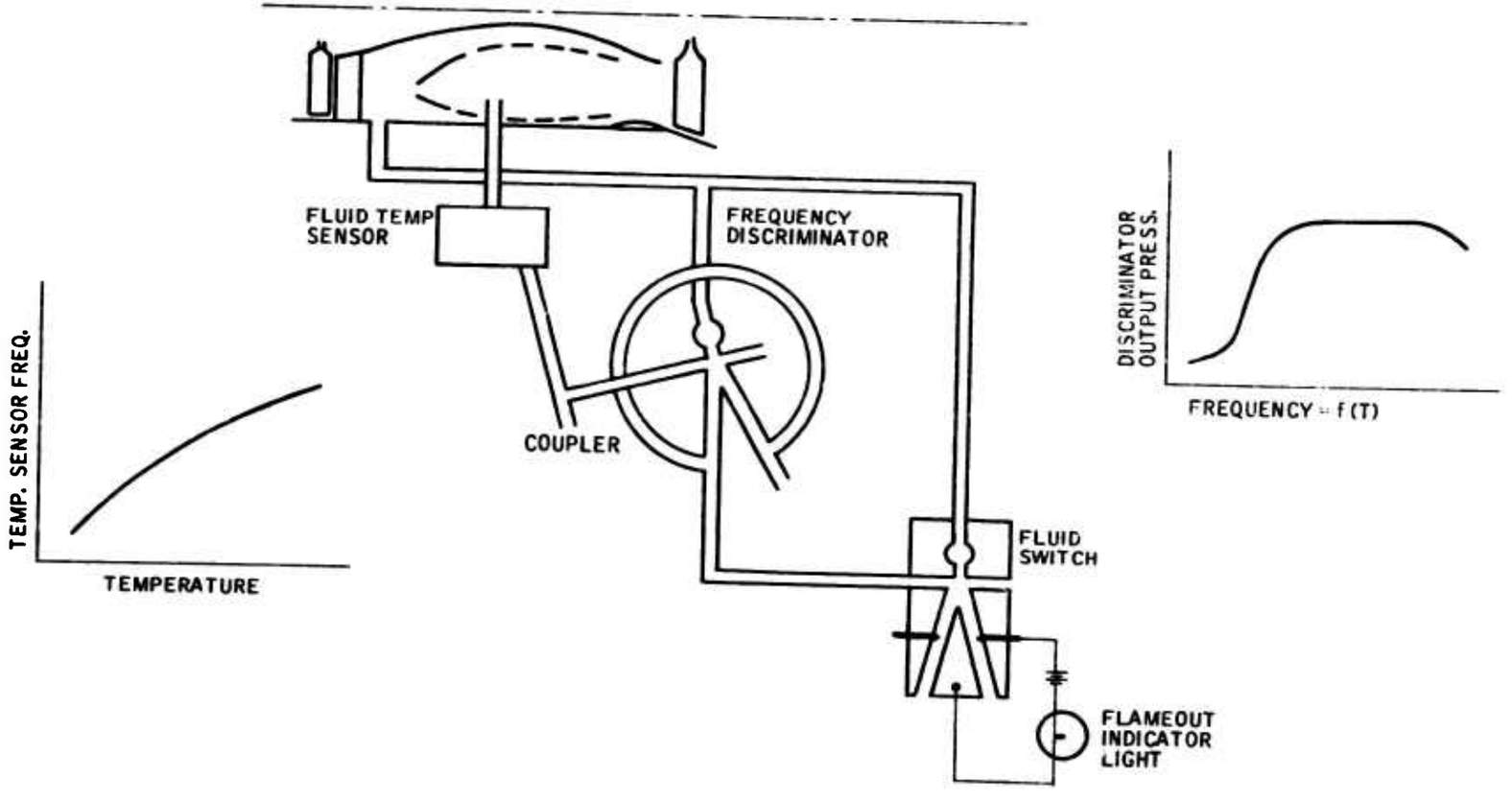

Figure 18. Fluid Flameout Monitor Schematic

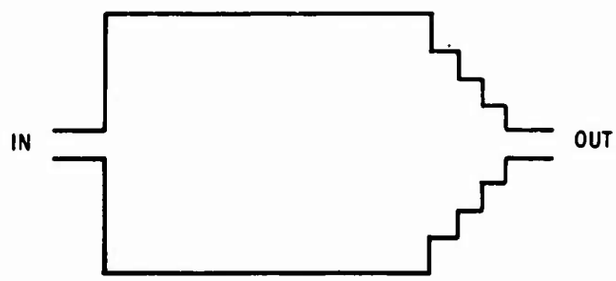

Figure 19. Stepped Resonance Tube

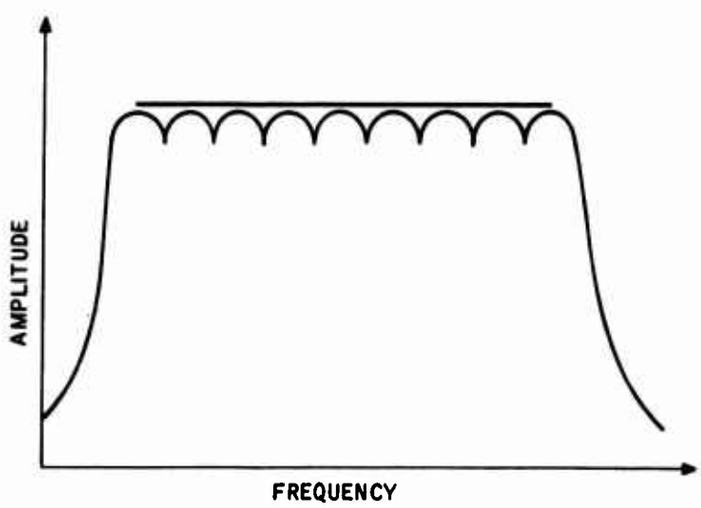

Figure 20. Bypass Filter Characteristics

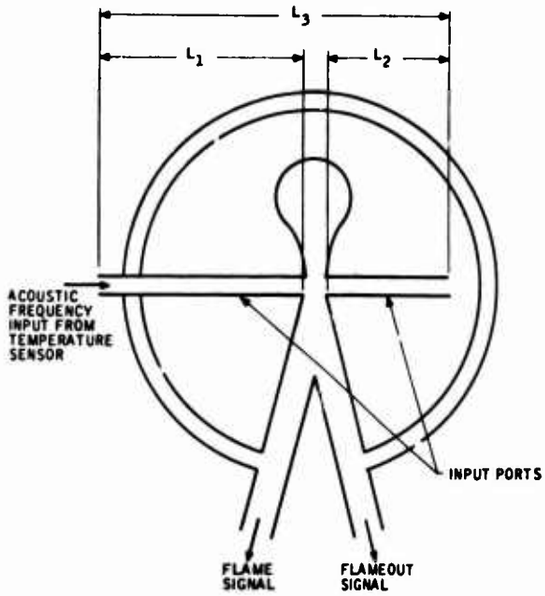

Figure 21. Frequency Discriminator Sketch

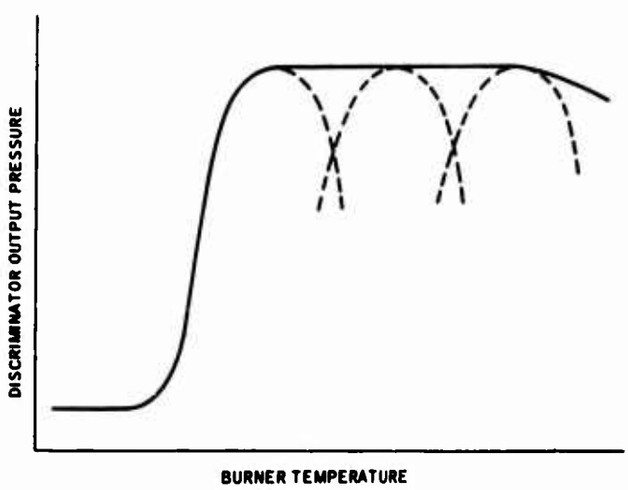

Figure 22. Fluid Frequency Discriminator Characteristics

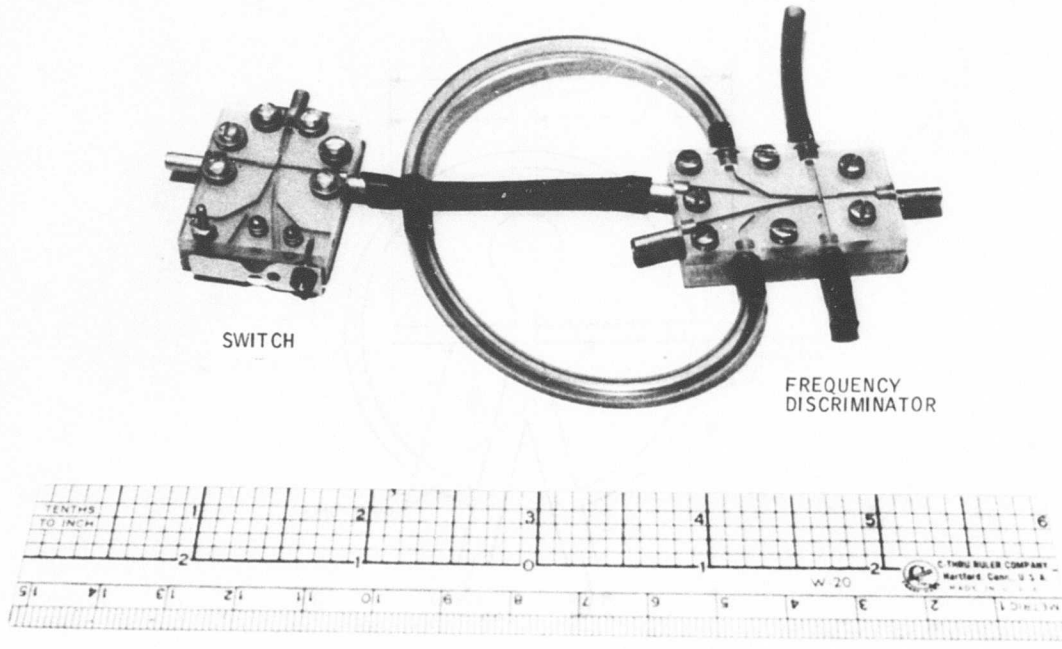

Figure 23. Early Discriminator and Switch

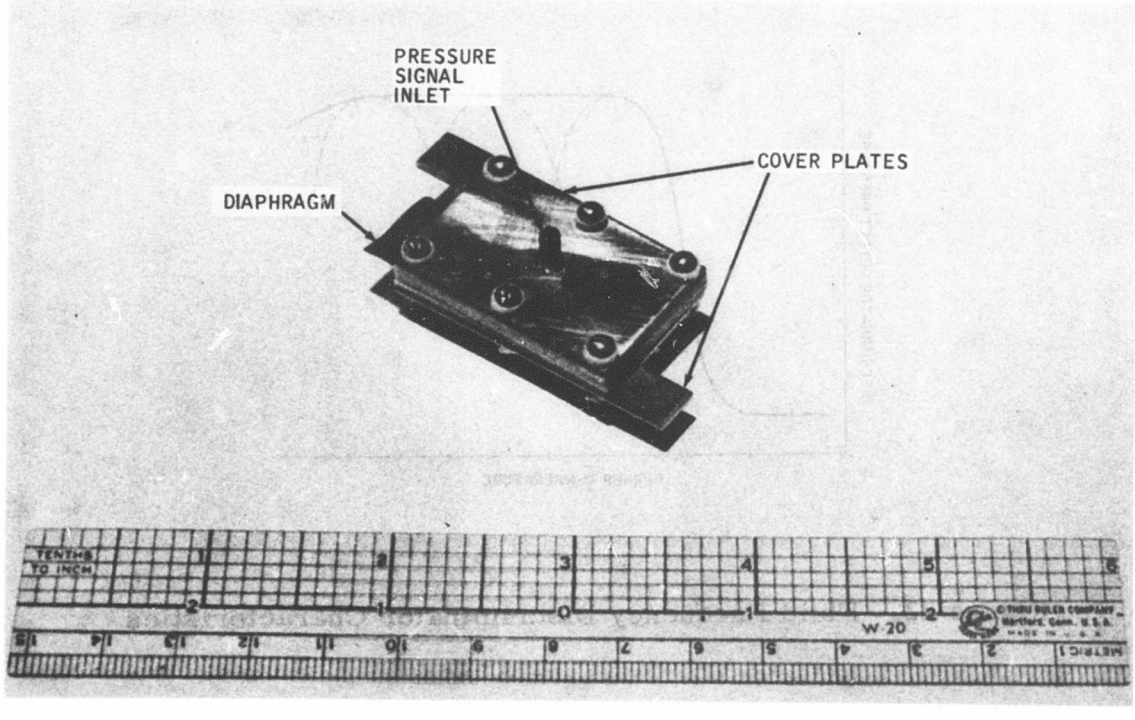

Figure 24. Capacitance Switch

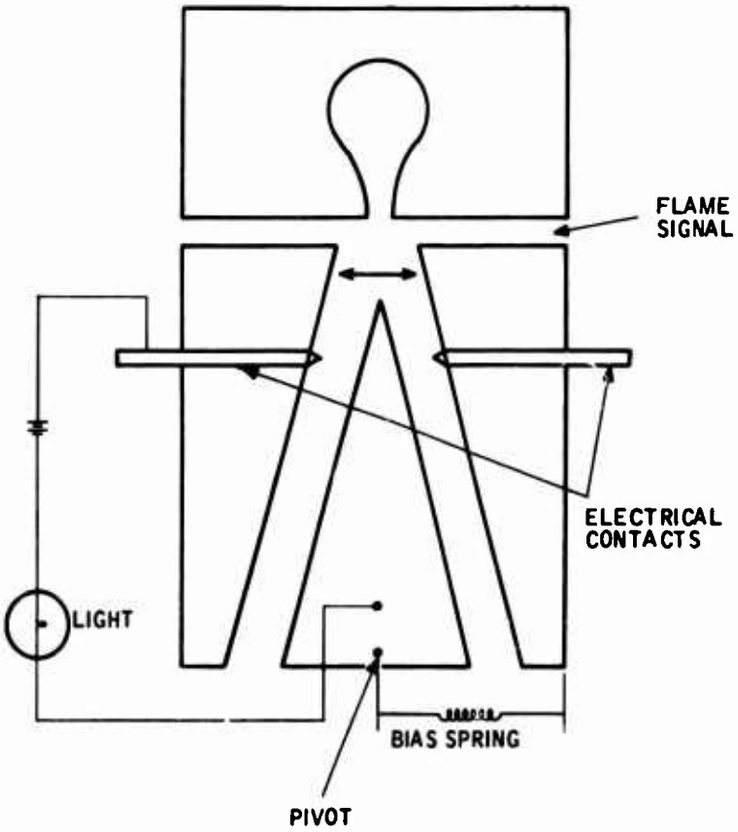

Figure 25. Final Switch Configuration

ENGINE TEST PROGRAM

ELECTRONIC SYSTEM

The electronic system was initially tested on the J85-7 engine at Honeywell's Flight Operations in November 1965. Since that time, approximately 2 hours of engine running have been accomplished with no adverse effects on the system. Figure 26 shows the unit mounted on the engine. The response time of the system was determined in the laboratory as described previously in this report. Time response traces are shown in Figures 11 through 14. The system shown in Figure 26 incorporates a ruggedized tube operating at 1 kc.

At a meeting in Minneapolis with the Army's project monitor, it was decided that the electronic system would be used to determine the response to flameout of the fluid system. Since the response time of the electronic system could easily be determined in the laboratory, it was felt that this unit could be installed on the engine at the same time as the fluid system, thereby providing a timer for the fluid flameout sensor.

FLUID SYSTEM

The fluidic flameout sensor was first tested on a J85-7 turbojet engine in January 1966. Figure 27 shows the unit mounted on the engine. The fluid temperature sensor and associated logic circuitry are shown in Figure 28. In this figure, the probe which is inserted in the burner to sample the hot gas is not shown. The coupler serves to separate the acoustic frequency signal generated by the temperature sensor from the hot gas. The frequency signal (which is a function of the sample gas temperature) is transmitted to the frequency discriminator. The discriminator will then produce a pressure signal which is amplified and fed into a fluid switch, indicating either flame or no flame. A schematic drawing of the flameout monitor showing the operation of the frequency discriminator was previously shown in Figure 18. The frequency discriminator and switch are powered by regulated compressor discharge air supplied to them through a common manifold (see Figure 28).

It should be realized that the fluid and electronic systems operate on completely different principles. The electronic unit senses the presence of the flame by "looking" at it, while the fluid system senses the burner gas temperature associated with the combustion process.

As described earlier, the fluid flameout monitor was developed by components; that is, each component was developed separately in the laboratory. The components were then assembled as shown in Figure 28 and mounted on the engine. There was an unexpected interaction between the coupler and the frequency discriminator which was not obvious during preliminary testing. It appears that the length and diameter of the

coupler have an effect on the discriminator. This also affects resonance phenomena in tubing lengths L_1, L_2 and L_3 depicted in Figure 21. A complete study on the basic phenomena involved was not conducted; however, a rematch between the discriminator and the coupler, which involved changing the length of the coupler, was accomplished and the fluid flameout sensor demonstrated capabilities beyond those required by the contract specifications.

ELECTRONIC AND FLUIDIC SYSTEMS OPERATING TOGETHER ON THE ENGINE

As mentioned previously, it was determined that the electronic unit would be used as a time base. Figure 29 shows the fluid and electronic systems installed on the J85-7 engine at Honeywell's Flight Operations. The engine was then operated between idle and military conditions. The output of both systems as well as the pressure output of the frequency discriminator was recorded by a Sanborn recorder, shown in Figure 30. Figure 31 indicates that the fluid system does not react to startup the same as the electronic system does, because it takes a certain amount of time to build up pressure in both the burner and the fluid temperature sensor. This, however, is not important for the flameout application. Operation of both systems between idle and military is shown in Figure 32. Note that the frequency discriminator does not reach the cutoff frequency during any part of the operation.

With the engine operating at 75-percent speed (just above idle), flameout was simulated by chopping the throttle. Figure 33 indicates that the fluid system responds to flameout within 0.020 second of the indication from the electronic system. Since it is known that the electronic system responds to flameout within 0.005 second, the fluid system, then, responds to flameout within 0.025 second from flame loss. This exceeds by a comfortable margin the specified 0.250-second response time.

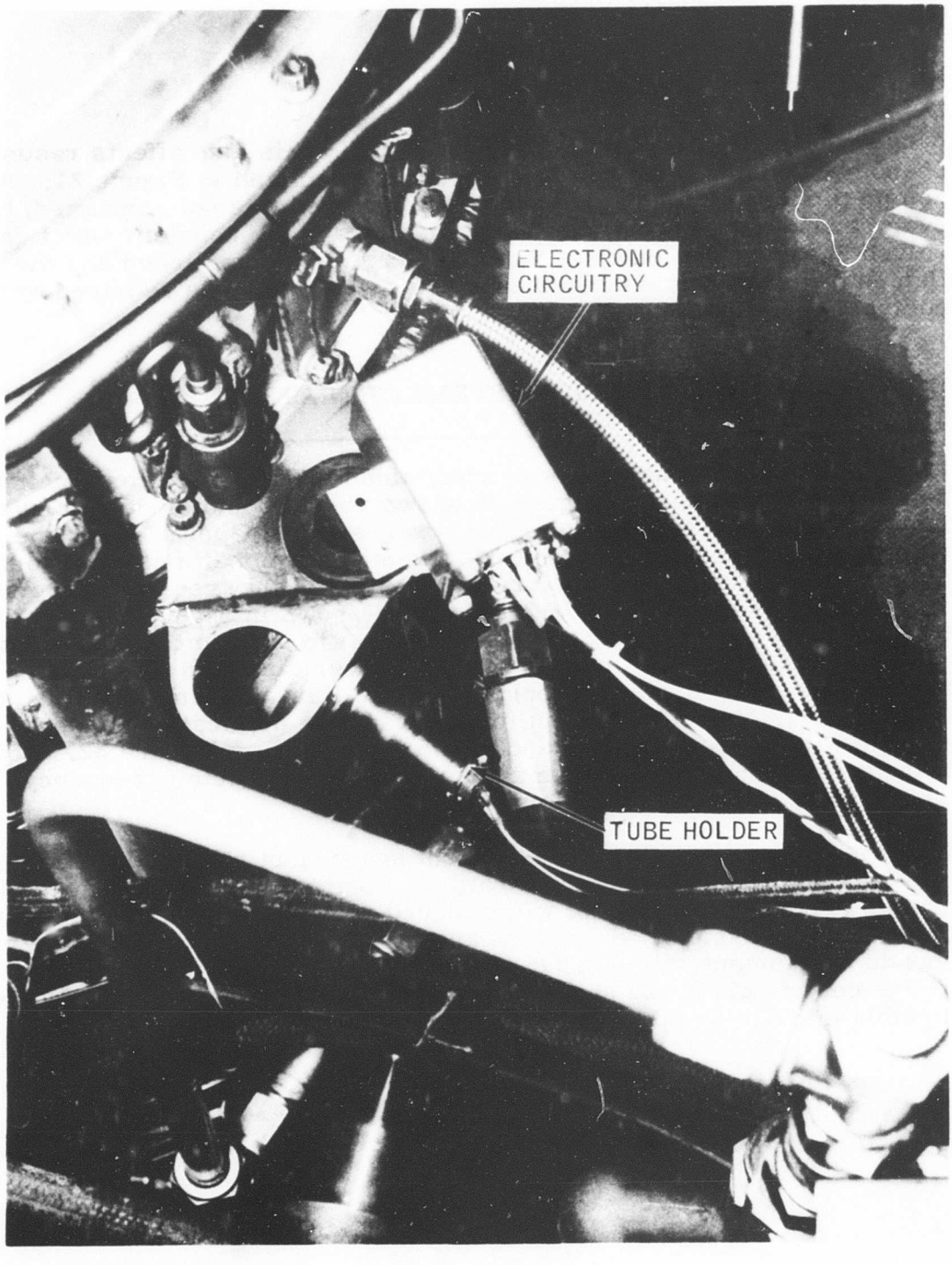

Figure 26. Electronic System Mounted on J85-7 Engine

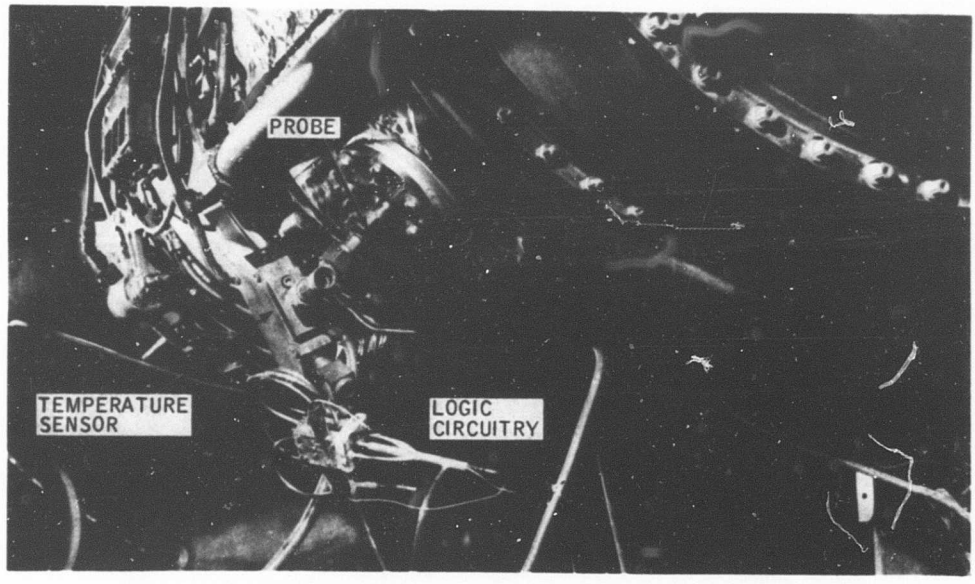

Figure 27. Flameout Monitor Mounted on J85-7 Engine

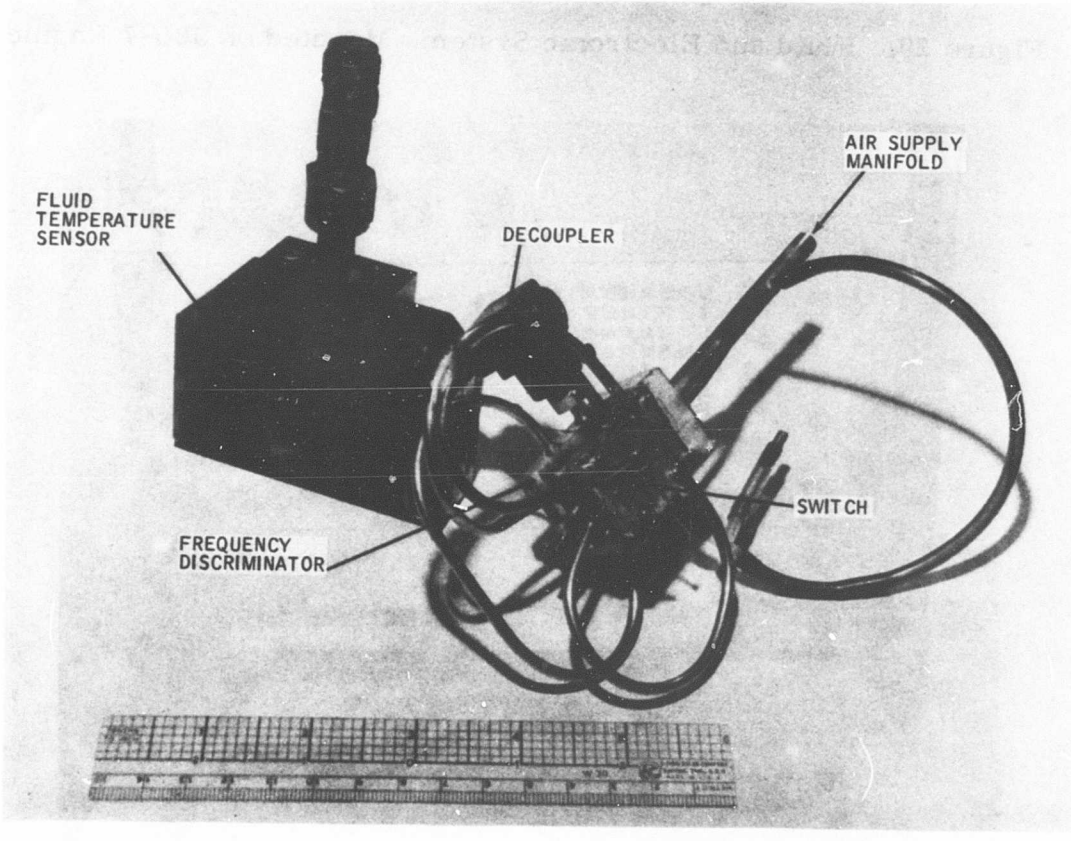

Figure 28. Fluid Flameout Monitor

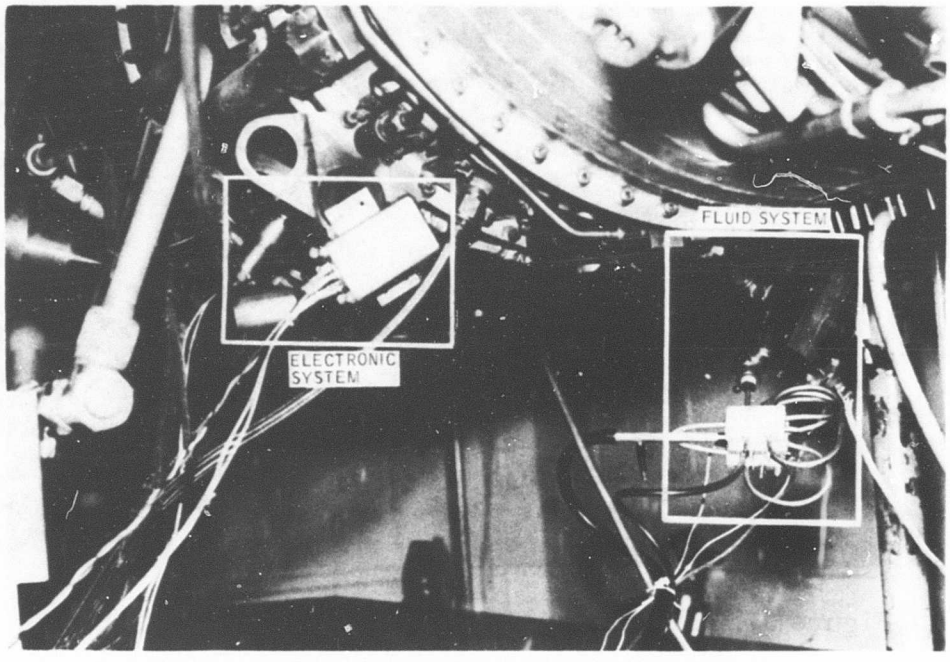

Figure 29. Fluid and Electronic Systems Mounted on J85-7 Engine

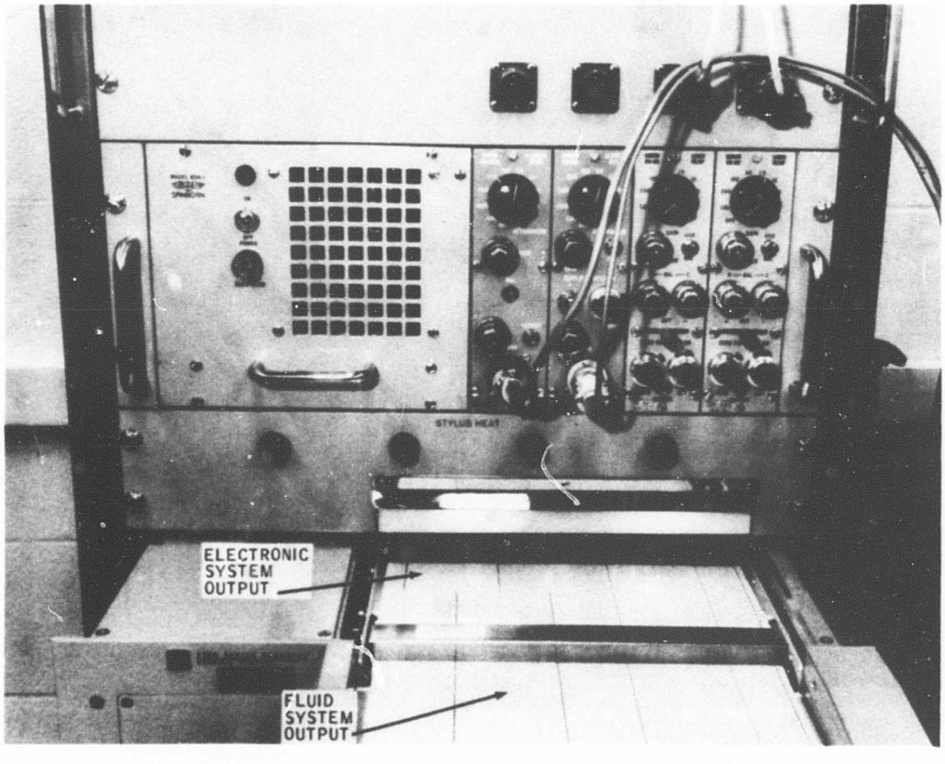

Figure 30. Recorder Used for Determining Response Time

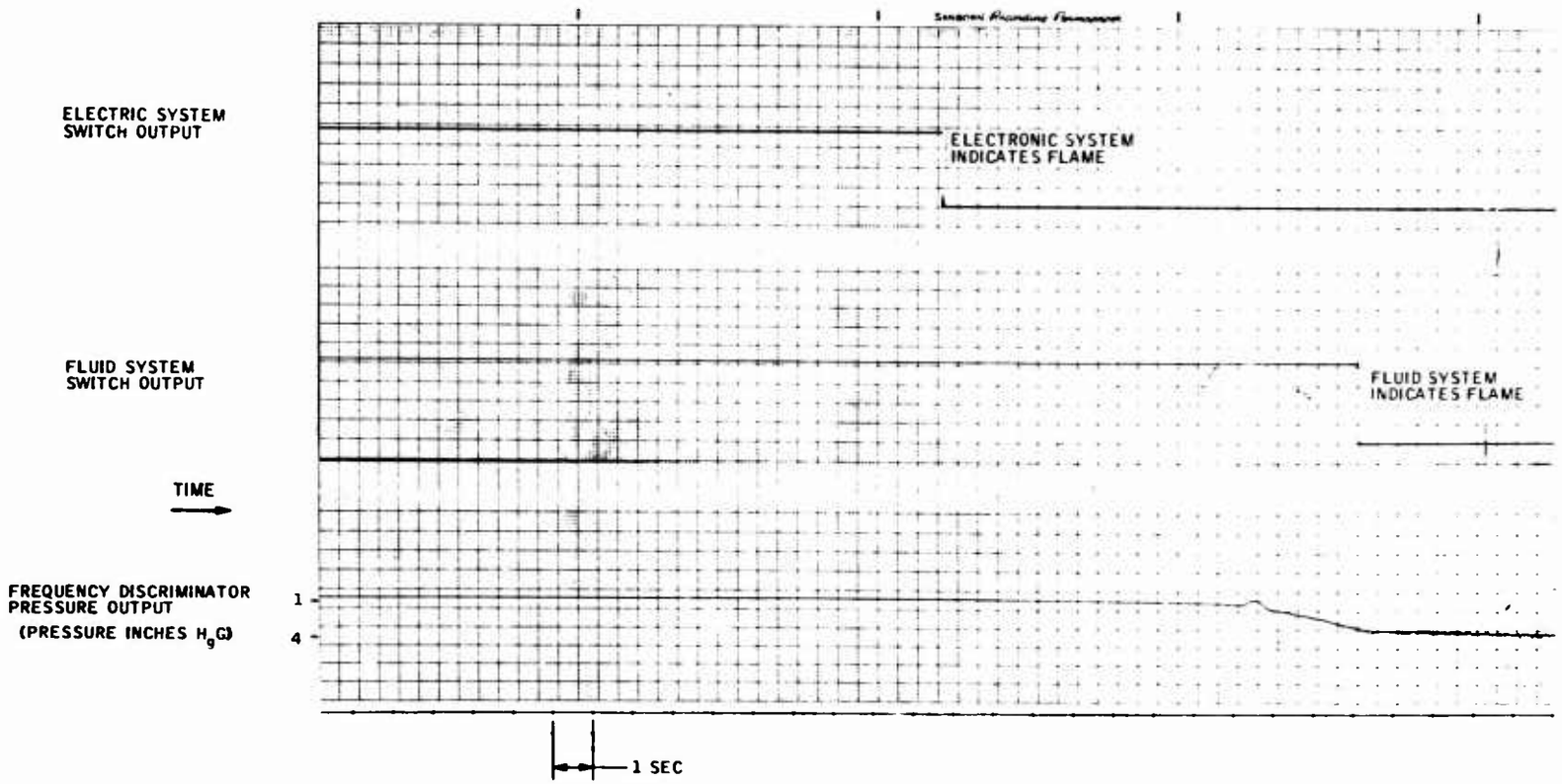

Figure 31. Electronic and Fluid Systems Operation During Startup

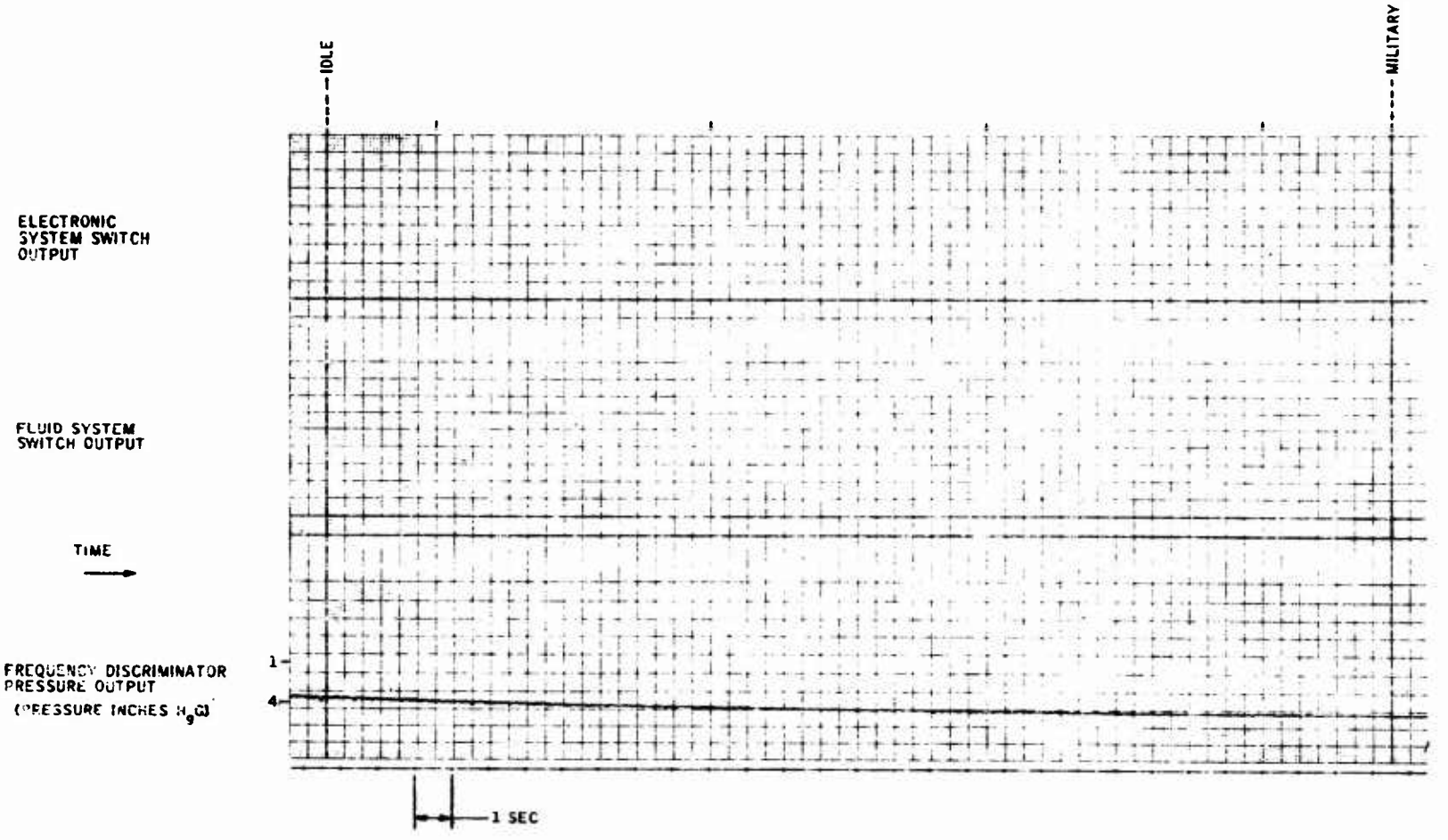

Figure 32. Electronic and Fluid Systems Operation Between Idle and Military Settings

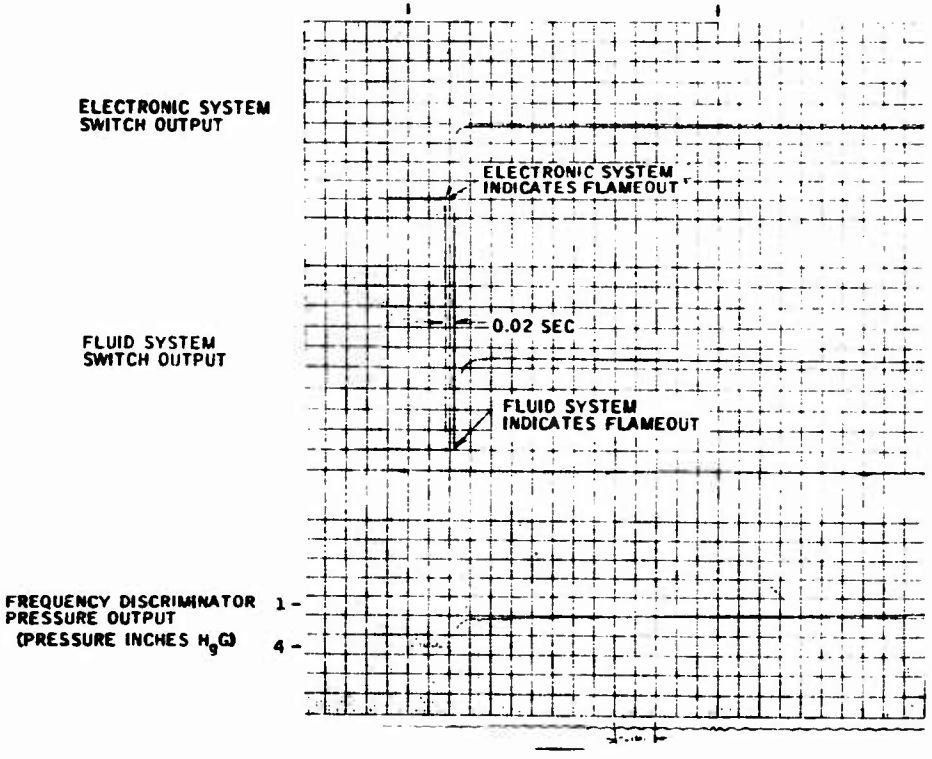

Figure 33. Response of Electronic and Fluid Systems to Simulated Flameout

CONCLUSIONS

The feasibility of a flameout sensor for turbine-engine-powered aircraft has been demonstrated. Honeywell has provided two systems, one electronic and the other fluidic, both of which exceed specifications by a considerable margin. Both systems have certain inherent advantages. For an immediate retrofit application to existing operational aircraft with simple installation, the electronic unit has a slight advantage. However, the fluidic system offers potential gains in reliability and environmental tolerance which could prove to be valuable in advanced applications.

DISTRIBUTION

US Army Materiel Command	6
US Army Mobility Command	5
US Army Aviation Materiel Command	4
First United States Army	1
US Army Forces Southern Command	1
Chief of R&D, DA	1
US Army Aviation Materiel Laboratories	15
US Army R&D Group (Europe)	2
US Army Human Engineering Laboratories	1
US Army Test and Evaluation Command	1
US Army Combat Developments Command, Fort Belvoir	2
US Army Combat Developments Command Transportation Agency	1
US Army Combat Developments Command Experimentation Command	3
US Army Transportation School	1
US Army Aviation School	1
US Army Infantry Center	2
US Army Aviation Maintenance Center	2
US Army Aviation Test Board	3
US Army Aviation Test Activity	2
Air Force Flight Test Center, Edwards AFB	1
US Army Field Office, AFSC, Andrews AFB	1
Air Force Aero Propulsion Laboratory, Wright-Patterson AFB	1
Systems Engineering Group (RTD), Wright-Patterson AFB	3
Bureau of Naval Weapons, DN	5
Chief of Naval Research	2
US Naval Air Station, Norfolk	1
Commandant of the Marine Corps	1
Marine Corps Liaison Officer, US Army Transportation School	1
Ames Research Center, NASA	1
Lewis Research Center, NASA	1
NASA Representative, Scientific and Technical Information Facility	2
NAFEC Library (FAA)	2
US Army Board for Aviation Accident Research	1
Bureau of Safety, Civil Aeronautics Board	2
US Naval Aviation Safety Center, Norfolk	1
Federal Aviation Agency, Washington, D. C.	1
Defense Documentation Center	20

Unclassified

Security Classification

DOCUMENT CONTROL DATA - R&D

(Security classification of title, body of abstract and indexing annotation must be entered when the overall report is classified)

1. ORIGINATING ACTIVITY *(Corporate author)* Honeywell Incorporated, Aeronautical Division Minneapolis, Minnesota	2a. REPORT SECURITY CLASSIFICATION Unclassified 2b. GROUP

3. REPORT TITLE

Feasibility Study of an In-Flight Flameout and Engine-Out Detection System

4. DESCRIPTIVE NOTES *(Type of report and inclusive dates)*

Final Report

5. AUTHOR(S) *(Last name, first name, initial)*

McMillan, John G.
Preston, Albert L.

6. REPORT DATE June 1966	7a. TOTAL NO. OF PAGES 41	7b. NO. OF REFS
8a. CONTRACT OR GRANT NO. DA 44-177-AMC-305(T) b. PROJECT NO. Task 1M121401D14414 c. d.	9a. ORIGINATOR'S REPORT NUMBER(S) USAAVLABS Technical Report 66-41 9b. OTHER REPORT NO(S) *(Any other numbers that may be assigned this report)* 20324-FR	

10. AVAILABILITY/LIMITATION NOTICES

Distribution of this document is unlimited.

11. SUPPLEMENTARY NOTES	12. SPONSORING MILITARY ACTIVITY US Army Aviation Materiel Laboratories Fort Eustis, Virginia

13. ABSTRACT

This document is the final report of an 8-month feasibility study to develop a flameout monitor for a gas turbine engine. During the course of the study, it was determined that two different systems, one fluidic and one electronic, should be investigated and tested.

Both systems were breadboarded and tested on a J85-7 turbojet engine. Test results described in this document show that both systems meet contract specifications for response time and that each has certain inherent advantages.

DD FORM 1 JAN 64 1473

Unclassified

Security Classification