MASSACHUSETTS INSTITUTE OF TECHNOLOGY
AEROELASTIC AND STRUCTURES RESEARCH LABORATORY

Technical Report 123-3

AD 636929

December 1965

AN EXTENDED LIFTING LINE THEORY FOR THE LOADS ON A ROTOR BLADE IN THE VICINITY OF A VORTEX

CLEARINGHOUSE
FOR FEDERAL SCIENTIFIC AND
TECHNICAL INFORMATION
Hardcopy | Microfiche
$2.00 | $0.50 | 47 pp
ARCHIVE COPY
Code 1

De
Bure
Contract NOw 64-0188-d

MASSACHUSETTS INSTITUTE OF TECHNOLOGY
AEROELASTIC AND STRUCTURES RESEARCH LABORATORY

Technical Report 123-3

AD 636929

December 1965

AN EXTENDED LIFTING LINE THEORY FOR THE LOADS ON A ROTOR BLADE IN THE VICINITY OF A VORTEX

by
J. P. Jones

FOR THE
Department of the Navy
Bureau of Naval Weapons
Contract NOw 64-0188-d

MASSACHUSETTS INSTITUTE OF TECHNOLOGY
AEROELASTIC AND STRUCTURES RESEARCH LABORATORY
Technical Report 123-3

AN EXTENDED LIFTING LINE THEORY FOR THE LOADS ON A ROTOR BLADE IN THE VICINITY OF A VORTEX

by
J.P. Jones

December, 1965

D D C
RECEIVED
AUG 17 1966

FOR THE
Department of the Navy
Bureau of Naval Weapons
Contract NOw 64-0188-d

SUMMARY

When the tip vortex from a rotor blade passes close to a succeeding blade the resulting spanwise circulation distribution has very severe gradients in the vicinity of the vortex. In consequence the lifting line theory for the circulation distribution is of doubtful accuracy in this region and its validity should be checked by a more elaborate theory.

In this paper, therefore, an extension of the lifting line theory is described which is based upon the argument that in the vicinity of the vortex the flow pattern will be more like that on a low aspect ratio wing, while still retaining the characteristics of high aspect ratio well away from the vortex. Spanwise circulation distributions are given for a blade of aspect ratio 20 for vortex distances from the blade varying between chord and one-tenth chord. The results of lifting line and modified lifting theory are compared and it is found that, except when the vortex is very close to the blade, there is little to choose between the results. When the vortex is very close to the blade, the modified theory predicts appreciably smaller circulation and a less peaky spanwise distribution near to the vortex, but no fundamental changes are found and it is thought unlikely that a more sophisticated lifting surface theory will lead to any significant changes in the results. Some suggestions are made as to the proper procedure for developing a lifting surface theory.

TABLE OF CONTENTS

Section		Page
I	INTRODUCTION	1
II	STATEMENT OF THE PROBLEM	3
III	DEVELOPMENT OF THEORY	7
IV	RESULTS	20
V	CONCLUSIONS- FURTHER DEVELOPMENTS	25
	REFERENCES	28
	FIGURES	29

LIST OF FIGURES

Figure 1	Vortex configurations
Figure 2	Trailing vortex system associated with the interfering vortex
Figure 3	Distribution of vorticity due to the free vortex
Figure 4	Bound vorticity contribution to the induced velocity
Figure 5	Diagram for the calculation of the induced velocity due to bound and trailing vortices
Figure 6	Notation for calculation of circulation distribution
Figure 7	Spanwise loading distributions A.R.20.- Comparison of theoretical results
Figure 8	Spanwise loading distributions A.R.20.- Comparison of theoretical results
Figure 9	Spanwise loading distributions A.R.20.- Comparison of theoretical results.

LIST OF FIGURES
(cont'd)

Figure 10 Effect of vortex height and method of solution on spanwise loading distribution A.R.20.

Figure 11 Effect of vortex height and method of solution on spanwise loading distribution A.R.6.

Figure 12 Influence of vortex height and method of calculation on peak circulation

LIST OF SYMBOLS

Γ - strength of free trailing vortex

h - distance of free vortex below blade

w_{1n} - induced velocity due to bound vorticity at station n

w_{2n} - induced velocity due to trailing vorticity at station n

$\gamma_n(x, y_n)$ - bound vortex strength at y_n and chordwise position x

S_n - span of nth bound vortex element

N - total number of bound vortex elements

b - effective aspect ratio parameter

K_n - local value of circulation

S_1 - spanwise distance of vortex from a blade tip

S_2 - spanwise distance of vortex from other blade tip

c - blade chord

V - local free stream speed

C_{L_n} - lift coefficient

w_v - induced velocity due to infinite vortex

w_T - induced velocity due to trailing vortex system

$K_0(y)$ - circulation induced by free trailing vortex alone

z - h/c

η_n - y_n/c

k_n - K_n/Γ

B - b/c

s_1 - S_1/c

s_2 - S_2/c

k_0 - K_0/Γ

I. INTRODUCTION

This report is an account of some studies which have been made of the effect of an infinite straight vortex on a wing or rotor blade of finite span. The purpose of the investigations was to extend some earlier work by Scully[1] who had found that the vorticity trailed from a blade as a result of the interference helps to smooth out peaks in the spanwise loading distribution. Scully also showed that the influence of these trailing vortices can be accounted for empirically by placing the vortex at a fictitious distance, greater than the true distance, from the blade. The main reason for doing further work in this area is that the lift distributions calculated on the basis of lifting line theory show a very rapid change in lift coefficient in the vicinity of the vortex. These changes are rapid enough to throw doubt on the validity of the lifting line theory in these regions and it has been suggested[2] that some form of lifting surface theory should be used to obtain a more reliable result.

In principle two approaches to a lifting surface solution are available. There is the "vortex lattice" which replaces the blade by a lattice of discrete bound and trailing vortices and the wake by discrete trailing vortices only. The strengths of the bound vortices are unknown and are determined approximately by imposing the condition that the resultant flow induced by the vortex lattice and the interfering vortex shall be tangential to the blade surface at a number of control points.

The alternative approach is the "acceleration potential" or "kernel function" method in which the wing is replaced by a continuous distribution of doublets, whose strength once again is determined by satisfying the tangential flow condition at a number of control points. These two techniques require far greater skill and insight, and a much larger scale of computation, than the lifting line theory and it was anticipated that the development time of either method would be long. In the case of the vortex lattice method, no actual machine program was available so that the work would have had to start from scratch. A program was available for the kernel function technique, but all the experience with this was on wings of low aspect ratio and it would have been necessary to build up a feel for this new problem. It was, therefore, decided to try to devise some alternative form of approximate theory which would permit a quick comparison of the lifting line and lifting surface theories and at the same time form a basis for the understanding of the more complete results when they become available. The arguments used to arrive at this theory and the principal conclusions derived from it are set out below.

II. STATEMENT OF THE PROBLEM

Consider (Figure 1) an infinite straight vortex which is below and at right angles to an otherwise unloaded thin rectangular blade of large aspect ratio. This is the sort of situation which arises whenever a "rectangularized wake" approximation is used in the calculation of rotor blade air loading. Then the vortex induces a velocity at the blade which is skew-symmetric about the projection of the vortex on the blade but which is uniform across the chord. A typical such distribution is marked A in Figure 1. The peak and its location depend only on the vertical distance of the vortex from the blade.

But this "induced incidence" will produce a circulation which is positive on the upwash side and negative on the downwash side. Since the incidence distribution is not uniform a trailing vortex sheet will form and the trailing vorticity will be of opposite "hand" on either side of the infinite vortex. The broad picture is then one of two horseshow trailing vortex systems, one springing from each half of the blade (Figure 2). These trailing horseshoes reduce the induced incidence on the upwash side and increase it (make it more positive) on the downwash side, i.e. they alleviate the influence of the isolated vortex so that the true incidence, and, therefore, circulation, distribution is very like that sketched as curve B in Figure 1. Thus the trailing system is not a pair of simple horseshoes, but is made up of trailing

vortex sheets which are very dense in the vicinity of the vortex and then reverse their direction of rotation and become quite diffuse outboard of the true circulation peak.

Outboard of this peak, therefore, the incidence varies only slowly and if the aspect ratio is large enough there will be no problem about using lifting line theory in these regions. But between the two peaks conditions are very complicated and require much closer examination before a plausible approximation can be devised. First of all, it is clear that there is no load along the projection of the vortex, because the bound vortex lines do not cross this projection but bend around very much as they do at the tip of an ordinary wing[3] (Figure 3). Thus, close to the vortex the dominant component of vorticity on the surface of the blade must be trailing vorticity lying parallel to the chord. This means that the induced velocity at a point such as P must be considerably influenced by the trailing vorticity which is ahead of P. The bound vorticity close to the vortex projection will make little contribution to the induced velocity at P, partly because for every element of "positive" bound vorticity on one portion of the blade there is an element of "negative" bound vorticity on the other half (see Figure 4). This shows a sketch of the spanwise contributions to the induced velocity at P due to a spanwise distribution of discrete lengths of bound vorticity at a chordwise station which is ahead of P. Since the loading is skew-symmetric about the projection of the vortex, for every element of bound vorticity on one side of the projection, there is a

corresponding element of opposite hand on the other. Corresponding elements are not equidistant from an arbitrary point such as P, but it is clear from the sketch that the induced velocities of the bound vorticities on the two parts of the blade will tend to cancel when P is close to the vortex line. But as P moves away from the vortex the number of elements contributing increases rapidly and conditions approach those which usually arise on a wing of finite span of high aspect ratio, i.e. with respect to a point which is not too close to a tip the bound vortex lines are effectively of infinite span. Thus close to the free vortex the bound vorticity only has a small, second order effect. But the contributions to the induced velocity from the trailing vorticity on the two halves of the blade are additive and we conclude that the trailing vorticity is the dominant factor in these regions. It will not matter, therefore, how crudely the bound vorticity is treated in the analysis since any errors will make only a small difference to the total result. Conventional lifting-line theory will take care of the wake downstream of the trailing edge and of those parts of the blade which are well away from the vortex. Thus the only important modification which we need introduce into the lifting-line theory is one which allows for the effect of that part of the trailing vorticity which lies on the surface of the blade close to the vortex projection.

In some respects the blade-vortex problem is similar to that of calculating the lift near to a wing-tip--the load

there falls off to zero and the trailing vortex lines bend around to lie parallel to the free stream. Even close to a wing tip the lifting line theory is useful, although this is largely because the load carried by the tip is only a small fraction of the total. But in the present case lifting line theory may be even more valuable because the load does not fall off so rapidly and because the bound vortex contributions from the two halves tend to cancel.

III. DEVELOPMENT OF THEORY

Figure 5 shows a constant chord blade at a height h above an infinitely long straight vortex of strength Γ. Take as origin 0 one trailing edge tip of the blade and let y be the spanwise coordinate, x the chordwise coordinate.

We shall assume at this stage that the distribution of vorticity over the wing and wake can be represented by a distribution of horseshoe vortices, each of finite span. This span may be a function of y and the vortex strength $\gamma_n(x, y)$ will be a function of x and y. We now chose to assume that the vorticity distribution is continuous across the chord but discontinuous in the spanwise direction. We could, of course, also assume finite chordwise-steps in the bound vorticity so that the wing surface is replaced by a vortex lattice but this is not quite so convenient to our discussion.

Then due to the element of bound vorticity at $Q(x, y_n)$ the induced velocity at $P(x_m, y_m)$, measured positive downwards, is

$$w_{in}(x_m, y_m) = \frac{\gamma_n(x)}{4\pi(x_m - x)}\left[\frac{y_m - y_n}{\left[(y_m - y_n)^2 + (x_m - x)^2\right]^{1/2}} - \frac{y_m - \overline{y_n + s_n}}{\left[(y_m - \overline{y_n + s_n})^2 + (x_m - x)^2\right]^{1/2}}\right] \quad (1)$$

where S_n is the span of the bound vortex element.

Springing from Q there is a trailing vortex of strength $\gamma_n(x) - \gamma_{n-1}(x)$. This induces at P a velocity W_{2n} given by

$$W_{2n}(x_m, y_m) = \frac{\gamma_n(x) - \gamma_{n-1}(x)}{4\pi(y_m - y_n)}\left[1 + \frac{x_m - x}{\left[(y_m - y_n)^2 + (x_m - x)^2\right]^{1/2}}\right] \tag{2}$$

To obtain the total induced velocity at (x_m, y_m) it is first necessary to integrate across the chord, i.e. with respect to x and then to sum up all the contribution over y_n. If the blade is to be a stream surface the total induced velocity due to the bound and trailing vorticity must be just equal and opposite to that induced by the interfering vortex. Ideally this should hold at every point of the blade but the assumption of discrete spanwise steps in the vorticity distribution makes this condition impossible to satisfy. The best that can be achieved is to satisfy the condition all across the chord at a limited number of spanwise stations, i.e. if we take N values of γ_n then the tangential flow condition must be satisfied at N spanwise stations. But even with this limited model, there is still no hope of an easy solution. The problems are that the form of $\gamma_n(x)$ is unknown and that the integrations are difficult to carry out either exactly or numerically.

Therefore,,we must, as in all other applications of lifting surface theory, have resort to further simplications. We deal first with the contribution of the bound vorticity.

If we consider a section of the blade some distance from the vortex then it is reasonable to assume that the bound vorticity is varying only slowly in this region. Thus $\gamma_{n-1} \simeq \gamma_n \simeq \gamma_{n+1}$. We next assume that $|y_m - \overline{y_n + s_n}| \gg |x_m - x|$ i.e. the distances in the spanwise direction are much greater than in the chordwise direction. With this assumption the $[\qquad\qquad]$ term is (1) becomes zero for $n \neq m$ and 2 for $n = m$. Thus the two assumptions combined are equivalent to the single assumption that at any spanwise station sufficiently far from the vortex the bound vorticity can be taken to be of infinite extent.

This assumption gives

$$w_{in}(x_m, y_m) = \frac{1}{2\pi} \int_0^c \frac{\gamma_n(x)\,dx}{x_m - x} \qquad |\text{span}| \gg |\text{chord}| \tag{3}$$

We now make the further assumption that (3) holds all over the wing. This is obviously not true in the vicinity of the vortex where chordwise integral of the bound vorticity is varying rapidly in a spanwise direction but, it has been

argued, the net induced effects of the bound vorticity are very small in that region. Therefore, even if we make a substantial error in the representation of the bound vorticity the error in the final solution will not be significant. This assumption, and equations (1) and (3) are more formal statements of the effects of bound vorticity which were discussed diagrammatically in the previous section. Identical assumptions are made in the conventional lifting line theory and this procedure is consistent with our argument that in the present circumstances it is only the additional effects of trailing vorticity that are important. But it will be noticed that the assumption (3) still allows a chordwise variation in the bound vorticity and, as later discussion will show, it is possible that we shall have to make use of this freedom at some stage.

We turn now to the evaluation of the induced effects of all the trailing vortices. Summing over the blade

$$\sum_{n}^{N} w_{2n}(x_m, y_m) = \frac{1}{4\pi} \sum_{n}^{N} \frac{1}{(y_m - y_n)} \int_0^c \left[1 + \frac{x_m - x}{\left[(x_m - x)^2 + (y_m - y_n)^2\right]^{1/2}} \right] \left[\gamma_n(x) - \gamma_{n-1}(x) \right] dx \tag{4}$$

The integration with respect to x is, of course, necessary because trailing vorticity at a spanwise position y_n "accumulates" across the chord.

We notice first of all that those parts of the wing

where $|y_m - y_n| \gg |x_m - x|$ (4) reduces to

$$\sum_{n}^{N} w_{2n}(x_m, y_m) = \frac{1}{4\pi} \sum_{n}^{N} \int_{0}^{c} \frac{[\gamma_n(x) - \gamma_{n-1}(x)]\, dx}{y_m - y_n} \tag{5}$$

$$= \frac{1}{4\pi} \sum_{n}^{N} \frac{\Delta K_n}{y_m - y_n} \tag{6}$$

where $\Delta K_n = \int_0^c [\gamma_n(x) - \gamma_{n-1}(x)]\, dx$ is the strength of the spanwise trailing vortex. Equation (6) is the standard formula for the induced velocity as used in the usual lifting line theory. It strictly only applies to points on the wing which are remote from the trailing vortex Γ but it is permissible to retain it even when a point such as P is close to a trailing vortex line provided that P is forward of 0. Once again the reason why this is acceptable is that the induced velocity in this region is very small and errors in it are not significant in the overall.

But if $|x - x_m|$ is equal to or greater than

$|y_m - y_n|$ and P is well behind O this approximation must fail. This is easily seen by putting $|x - x_m| \gg |y_m - y_n|$ in (4) in which case the term $[\quad]$ becomes 2 and

$$\sum_{n}^{N} W_{2n}(x_m, y_m) = \frac{1}{2\pi} \sum_{n}^{N} \frac{\Delta K_n}{y_m - y_n} \tag{7}$$

Equation (7) is a standard result used in the theory of wings of very low aspect ratio, i.e. for those wings or parts of wings where the predominant component of vorticity is chordwise. Now this is the case close to the infinite vortex so that moving outwards from the vortex conditions must change from something like those on a low aspect ratio wing to those on a high aspect ratio wing.

This suggests that the blade-vortex problem might be solved approximately by imposing a plausible variation from low to high aspect ratio theory as the point $P(x_m, y_m)$ moves away from the infinite vortex. This, of course, is not a new idea; it is a standard procedure in some of those approximate lifting surface theories[3] which deal with the flow in the vicinity of a wing tip. But if this approach is used

exactly how is the transition from low to high aspect ratio to be accomplished?

We proceed in the following way. In equation (4) divide the numerator and the denominator by $X_m - X$ so that the expression for the total induced velocity due to the trailing vortex system becomes

$$4\pi W_1(X_m, Y_m) = \sum_{n}^{N} \frac{\Delta K_n}{Y_m - Y_n} + \sum_{n}^{N} \frac{1}{Y_m - Y_n} \int_0^c \frac{\gamma_n(X) - \gamma_{n-1}(X)}{\left[1 + \frac{(Y_m - Y_n)^2}{(X_m - X)^2}\right]^{1/2}} \, dX \qquad (8)$$

The first term in (8) is the induced velocity as it would be given by a conventional lifting line theory based on the assumption that the loading is condensed into a single bound vortex whose strength varies spanwise. The second term is zero if the ratio of the spanwise distances to the chordwise distances is very large, but the denominator tends to unity as this ratio becomes very small, i.e. if the spanwise rate of change of circulation is large so that the trailing vortices are closely spaced. It is into this term that the correction for an "effective local aspect ratio" must be introduced and because an integration is involved this correction is a function of the chordwise loading. Thus we should perhaps put

$$\gamma_n(x,y) = 2V\left[A_0(y)\cot(\theta/2) + \sum_s^{\infty} A_s(y)\sin s\theta\right] \tag{9}$$

where $$x = \left(\frac{c}{2}\right)\left[1 - \cos\theta\right] \tag{10}$$

so that the chordwise loading has its customary two-dimensional form, but its scale can vary spanwise since the unknown coefficients $A_0(y)$, $A_s(y)$, etc. are functions of y. Substituting (9), (10), in (8) the integrals can be evaluated numerically for each value of y so that at each spanwise station the chordwise loading is given as a known function of several arbitrary coefficients. To get numerical values for these coefficients we have to impose the condition (or some variation of this) that the downwash due to the trailing vortex system just cancels, at the blade surface, the induced velocity due to the infinite vortex. The problem then reduces to the solution of a number of simultaneous equations; the number of unknowns is the product of the maximum number of chordwise loading terms and the maximum number of spanwise stations. This process is basically quite simple, and is not much different from the "kernel function" technique, but it is in fact too sophisticated for our purpose, since we are no developing a lifting surface theory, but merely seeking a modification

to the lifting line theory. The lifting line theory itself is based upon the assumption that only the first term in the chordwise loading series is important and this, since it gives a constant induced velocity across the chord, leads directly to the first term in (8). A comparison of the first and second terms in (8) suggests that an adequate second approximation might be got by replacing the integral by some mean value across the chord. If we take only the first term in the chordwise, loading series, i.e. the two-dimensional flat plate loading, then it is probably accurate enough to replace $X_m - X$ by some average value across the chord and the expression for the induced velocity of the trailing vortex system then becomes

$$4\pi w_1(X_m, Y_m) = \sum \frac{\Delta K_n}{Y_m - Y_n}\left[1 + \frac{1}{\left[1 + \frac{(Y_m - Y_n)^2}{b^2}\right]^{1/2}}\right] \tag{11}$$

where b is some average value of $X_m - X$.

Clearly, the values obtained for the induced velocities, and, therefore, for the circulation distributions, will depend upon value assigned to the parameter b . Although we can (see below) obtain plausible estimates the basic idea of a mean (average across the chord) correction will only be useful if the calculated circulation distributions are relatively insensitive to the actual values chosen. One of the first steps which must be taken, therefore, is to vary b over a reason-

able range.

All these assumptions and considerations finally reduce the model of the flow to the form shown in Figure 6. Since only one known chordwise loading distribution is used the bound vorticity can be condensed into a single line vortex so that at a spanwise station y_n we merely assume a bound circulation K_n together with a trailing vortex of strength $K_{n+1} - K_n$ at the station 1/2 ($y_n + y_{n+1}$) i.e., y is measured to the center of each spanwise segment. The assumption that at any spanwise station the bound vorticity is of infinite extend means that we essentially are considering the flow as two-dimensional with the incidence at that station equal to the algebraic sum of the induced velocities divided by the local free stream velocity V. These two assumptions are together equivalent to the single assumption that at any spanwise station the flow is two-dimensional, so that the lift curve slope is a_o, but the incidence is the algebraic sum of the contributions of the free infinite vortex and the trailing vortex system.

Since the lift per unit span $= \rho V K_n = \frac{1}{2} C_{L_n} \rho c V^2$ (12)

where c is the local chord

$$K_n = \frac{1}{2} C_{L_n} c V \tag{13}$$

but

$$C_{L_n} = -a_o (w_v + w_T) / V \tag{14}$$

so that

$$K_n = -(a_o/2)(w_v + w_T) \tag{15}$$

where w_v is the (downward) velocity induced by the infinite vortex and w_T is the total (downward) velocity induced by the trailing vortex system.

At any spanwise station y_m we have

$$w_v(y_m) = \frac{\Gamma}{2\pi} \frac{(y_m - s_1)}{h^2 + (y_m - s_1)} \tag{16}$$

$$w_T(y_m) = \frac{1}{4\pi} \sum_{n=1}^{N} \frac{\Delta K_n}{\left[\frac{y_{n+1}+y_n}{2} - y_m\right]} \left[1 + \frac{A}{\left[1 + \frac{1}{b^2}\left(\frac{y_{n+1}+y_n}{2} - y_m\right)^2\right]^{1/2}}\right] \tag{17}$$

where

$$\Delta K_n = K_{n+1} - K_n \qquad \Delta K_N = -K_N$$

$$\Delta K_1 = -K_1$$

and A is a parameter which can have the values of 1 or 0. It has been introduced so that loading distributions predicted by the lifting line theory ($A = 0$) may be compared with those by the modified theory ($A = 1$).

From (15)

$$K_m = -(a_0 c/2)\left[W_V(y_m) + W_T(y_m)\right] \tag{18}$$

and substituting from (15), (16) leads to a set of N simultaneous equations for the unknown K_n.

To solve we put the variables in non-dimensional form by means of the substitutions,

$$\begin{aligned} h &= c\,z & y_n &= c\,\eta_n & S_1 &= c\,s_1 \\ K_n &= \Gamma k_n & b &= c\,B & S_2 &= c\,s_2 \end{aligned} \tag{19}$$

and a digital computer program has been written which calculates the coefficients in , and solves, the resulting set of equations. The data necessary for the program are the vortex height and spanwise position - in chords length - the selected value of B and the positions which have been chosen for the trailing vortices. This latter is a matter for experiment but obviously the vortices should be closely spaced close to the infinite vortex, and more widely space elsewhere. The program output is all the values of k_n i.e.the local bound vortex strengths expressed as a fraction of the infinite vortex strength.

The parameter B is a non-dimensional measure of how the induced velocity of the trailing vortex system is to be

averaged across the chord and we may obtain an approximate idea of its value in the following way. $B \equiv \left\langle \frac{X_m - X}{c} \right\rangle$ and is obviously less than unity. If we put B = 0 the denominator of terms multiplied by A becomes infinite and the problem reduces - as of course it should since B = 0 means that the chord vanishes - to the lifting line solution. Thus a first guess perhaps would be B = 0.5. But most of the load on an aerofoil section is developed over the front half of the chord so that the trailing vorticity has accumulated to almost its maximum strength by mid-chord. The induced velocity must, therefore, become virtually constant somewhere between the mid-chord and the trailing edge and a more reasonable guess might be to put B = 0.75. In the calculations whose results are described in the next section B was allowed to take the values 0.5, 0.75 and 1.0 in order to test the sensitivity of the solutions to this parameter.

IV. RESULTS

The following cases were evaluated using the methods described above. For a blade of aspect ratio 20 lifting line and modified lifting line theories have been used for vortex distances below the blade of 1, 0.5, 0.25 and 0.1 chords length (see Figures 7, 8, 9, 10, 11 which show the spanwise distribution of circulation on one-half of the blade). Some cases were evaluated for various values of B, but the calculated distributions are far from sensitive to this parameter (see Figures 7, 8, 10), and it is suggested that B = 0.75 should be used in future. A few loading distributions have also been calculated for a blade of aspect ratio 6 (see Figure 11). In all these examples the vortex was taken to be underneath the mid-span point of the blade and a_0 was put equal to 2π .

Basically all the loading distributions show the same features. The infinite vortex induces an incidence distribution which on one side of the vortex rises rapidly to a peak and then falls away again in a more or less hyperbolic manner (on the other side of the vortex the induced incidence distribution is the same, but of opposite sign).

Immediately above the vortex the induced incidence is zero. Each peak occurs away from the vortex at a spanwise distance equal to the vertical distance of the vortex from the blade. In the absence of trailing vortices this incidence distribution can be converted directly into a circulation

distribution. If we denote this primitive circulation distribution by K_o then $k_o = K_o / \Gamma$ is given by

$$k_o(\eta) = \frac{K_o}{\Gamma} = \frac{1}{2}\left(\frac{\eta}{z^2+\eta^2}\right) \tag{20}$$

which has a maximum value of $1/4\eta$ @ $z = \eta$

The effect of the trailing vorticity is to reduce the height of the primitive circulation peak and to smooth out the variation somewhat, but apart from their dimensions the actual and primitive circulation distributions are very similar and Scully's[1] idea of a fictitious height seems to be quite valid. If the lifting line theory is used the reduction in peak height is about 60% of the primitive value for a vortex distance of one chord and this attenuation increases with decrease of vortex distance until the peak is about 35% of the primitive for a distance of one quarter chord (Figure 12). It will, however, be appreciated that this does not mean that the actual peak circulation falls to zero as the vortex approaches the blade. In fact, the actual peak circulation becomes infinite under these conditions, although it is still infinitely smaller than the primitive. This raises a point of interest in connection with the strength of the trailing vorticity since this must actually pass closer to the next following blade than the free vortex which is its cause. For small vortex distances the vorticity

which is trailed close to the vortex is sufficiently bunched, i.e. the trailing sheet is locally sufficiently strong, for there to be virtually a concentrated vortex in that vicinity. The strength of this concentrated vorticity is twice the peak value of the circulation - twice because although the trailing vortices from the two halves of the blade are of opposite hand their strengths combine near the vortex. (This is apparent from Figure 2) Thus, some very strong vortices might appear in the wake and for the case of a vortex of 0.1 chord distant, from the blade Figure 10 shows that, on a basis of lifting line theory, the strength is about 95% of that of the free vortex. But this diagram also shows that the closer the vortex is to the blade the sharper is the peak of the loading distribution. Thus on either side of this very dense trailing vortex sheet is another, rather more diffuse, sheet of opposite hand and total strength of the order of half the peak value. Close to the free vortex, therefore, when that vortex is close to the blade, the wake contains three fairly concentrated trailing vortices whose net strength is only a fraction of that of the free vortex. Succeeding blades should, therefore, be free of any undue extra interference, but this feature undoubtedly adds to the complication of the flow pattern and its computation. For the examples given here, where the free vortex is symmetrically placed on the blade, there is no direct change in the total lift, but the loading distribution exerts a couple on the blade which undoubtedly modifies the flapping and will cause the blade to bend.

If the modified lifting line theory is used the peak

vortex strength is less than that given by the simpler theory and the spanwise distribution is slightly smoother. But, except when the vortex is very close to the blade, the rate at which the peak circulation is reduced with vortex distance is virtually the same as for the lifting line theory (Figure 12). As is to be expected the greatest difference between the two theories arises close to the vortex and is accentuated when the vortex is close to the blade. When the vortex is very close, it is obviously necessary to use the modified theory, but there is little difference between the peak values of circulation given by the two theories when expressed as a percentage of the primitive. It seems unlikely, therefore, that a more elaborate lifting surface calculation will predict further significant changes in the loading distribution. The actual value of the peak is slightly affected by the assumed value of B (Figure 8), but well away from the vortex the predictions of the two theories are virtually indistinguishable for all values of B and this is clearly not a significant parameter. Some explanation of this can be got from an examination of equation (17). The induced velocity at any spanwise station is the sum of terms which depend upon the difference in circulations between segments. Thus, with the sort of values which are appropriate to B, it will not make much difference to the induced velocity whether we take A = 0 or 1 unless the circulation is varying rapidly. Thus, in regions where the loading changes only slowly spanwise the lifting line theory and the modified theory should lead to virtually the same answers. This means that the greatest difference between the two theories should be found near to the

infinite vortex.

The difference between the results of the two theories are accentuated by a reduction in aspect ratio. Figure 11 shows that for an aspect ratio of 6 the spanwise loading curves are not so peaky as for an aspect ratio of 20 and the actual peaks are slightly reduced. Although the curves predicted by the two theories appear to remain much farther apart than for the high aspect ratio, this is only because the distance from the vortex to the tip is much shorter in the low aspect ratio blade. In any case not too much significance should be attached to this since both the methods are inaccurate near the tip. Once again, it is found that B is not a significant parameter.

V. CONCLUSIONS - FURTHER DEVELOPMENTS

The principal conclusion of this paper is that lifting line theory should be adequate to predict the loading distributions on a rotor blade in forward flight, although if a vortex passes very close to the blade modified lifting line theory might be used. Ideally this conclusion should be checked by a more elaborate calculation and it may indeed be that there are cases when the use of lifting surface theory proper is really necessary. One situation where this might arise is when a free tip vortex is close to, and parallel to the span of, a following blade. Then the chordwise pressure distribution will be quite unlike that of a conventional aerofoil and this difference will hold over a substantial part of the span. (A study of the variations in rotor blade chordwise pressure distributions in forward flight would be a good topic for further research. There is already experimental evidence[4] that these differ considerably from the usual. If vortex interference is a partial, and unavoidable, cause of this deviation, it is possible that some improvement in rotor performance and control loads could be brought about by designing a more appropriate profile.) But if it does become necessary to establish a more precise lifting surface theory then it is suggested that the improvements be confined to the vicinity of the interfering vortex. The extra effort is not just in computation time and irrelevant data for regions well away from the vortex may impede understanding.

Although in principle the vortex lattice method could give the loading distribution more accurately without further detailed knowledge of the flow pattern, in practice better results and faster convergence would be obtained if at least an exact, limiting, solution for the surface vorticity distribution were known. The important features to be represented in the vicinity of the vortex are the correct chordwise loading, since this determines exactly how the trailing vorticity accumulates across the chord, and the correct shape for the spanwise loading since this determines the distribution of trailing vorticity in the wake. A very interesting and valuable contribution would be obtained if a solution could be devised for the case when the vortex actually passes through the blade. It would probably be sufficient to assume the blade to be of infinite span but of finite chord. The incorrect behavior well away from the vortex would be irrelevant and the theoretical chordwise and spanwise loadings would be excellent "first terms" for a more general case, particularly if the kernel function approach were used. The importance of having the correct chordwise loading is brought out by the fact that the accumulation of trailing vorticity across the chord will lead to a higher induced velocity at the trailing edge so that there will be an induced camber close to the vortex. This "effective warping" of the section will be of opposite sign on either side of the vortex and must lead to shifts in the position of the center of pressure.

Although the theory described is Section 3 and its

associated digital computer program are quite general, there was initially no time to exploit all the possibilities. This work was, therefore, taken up later by I.A. Simons[5] and it is suggested that his paper be read in conjunction with the present report. Simons gives more examples of spanwise loading distributions, particularly when the vortex is very close to the blade, and studies the effect of offsetting the vortex from the mid-span of the blade. He also examines the concepts of effective strength and effective height and shows that the assumption of a finite core for the free vortex has a marked effect upon the loading distributions.

REFERENCES

1. Scully, M., Basic Techniques for Studies of Helicopter Vortex Wake Geometry and Some Preliminary Results. MIT, ASRL TR 123-1.

2. Miller, R.H., Theoretical Determination of Rotor Blade Harmonic Airloads, MIT, ASRL TR 107-2.

3. Thwaites, B., Incompressible Aerodynamics, (Ch.VII. O.U.P.).

4. Schieman, J., Comparison of Flight Measured Helicopter Rotor Blade Chordwise Pressure Distributions and Two-Dimensional Airfoil Characteristics, Proceedings CAL/TRECOM Symposium on Dynamic Loads Problems Associated with Helicopters and V/STOL Aircraft, June, 1963.

5. Simons, I.A., Blade-Vortex Interaction on Helicopter Rotors in Forward Flight, Memorandum I.S.A.V.126. Presented at the Symposium on the Noise and Loading Actions on Helicopter V/STOL Aircraft and Ground Effect Machines, Sept., 1963.

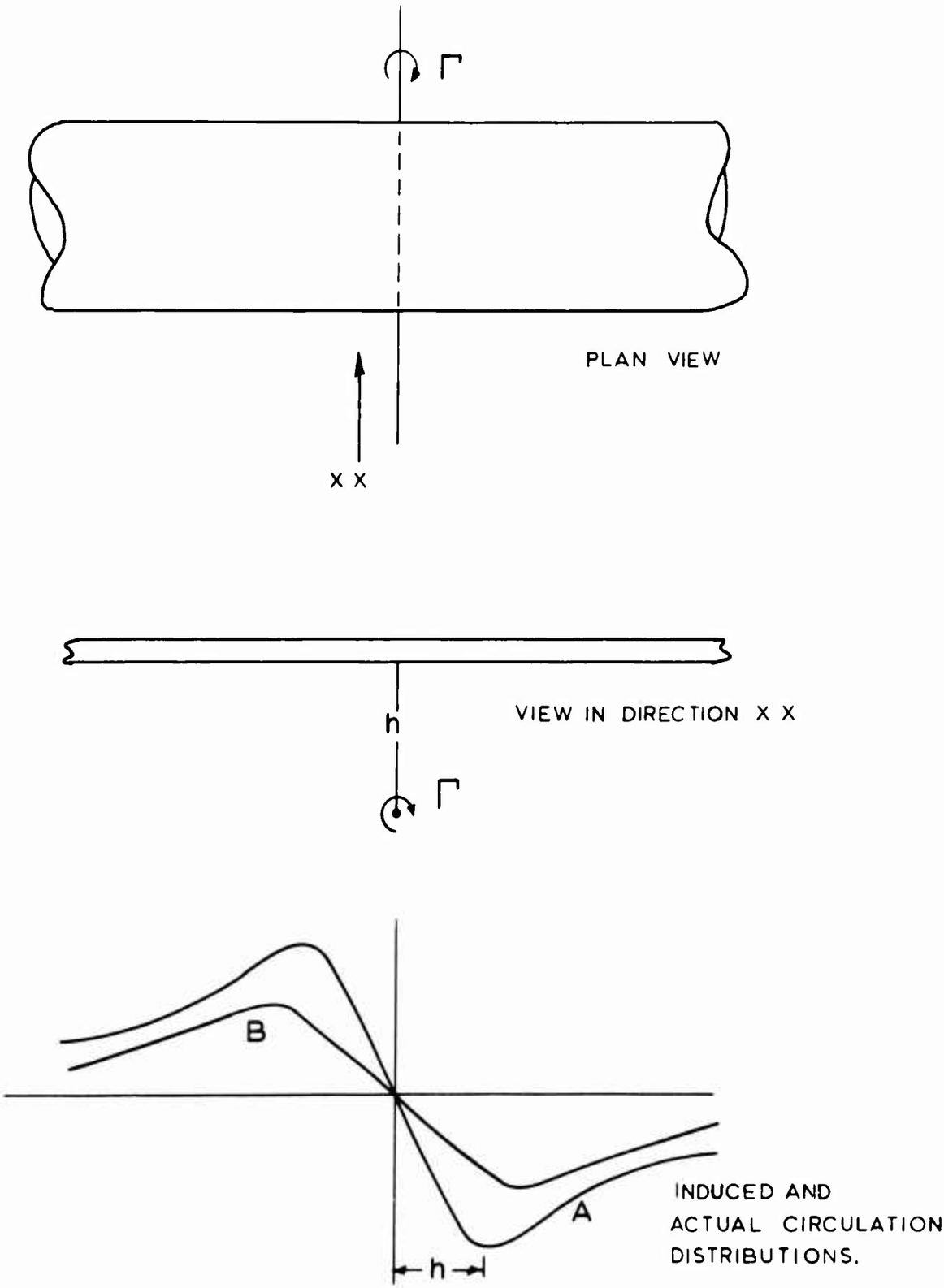

Figure .1 Vortex configuration

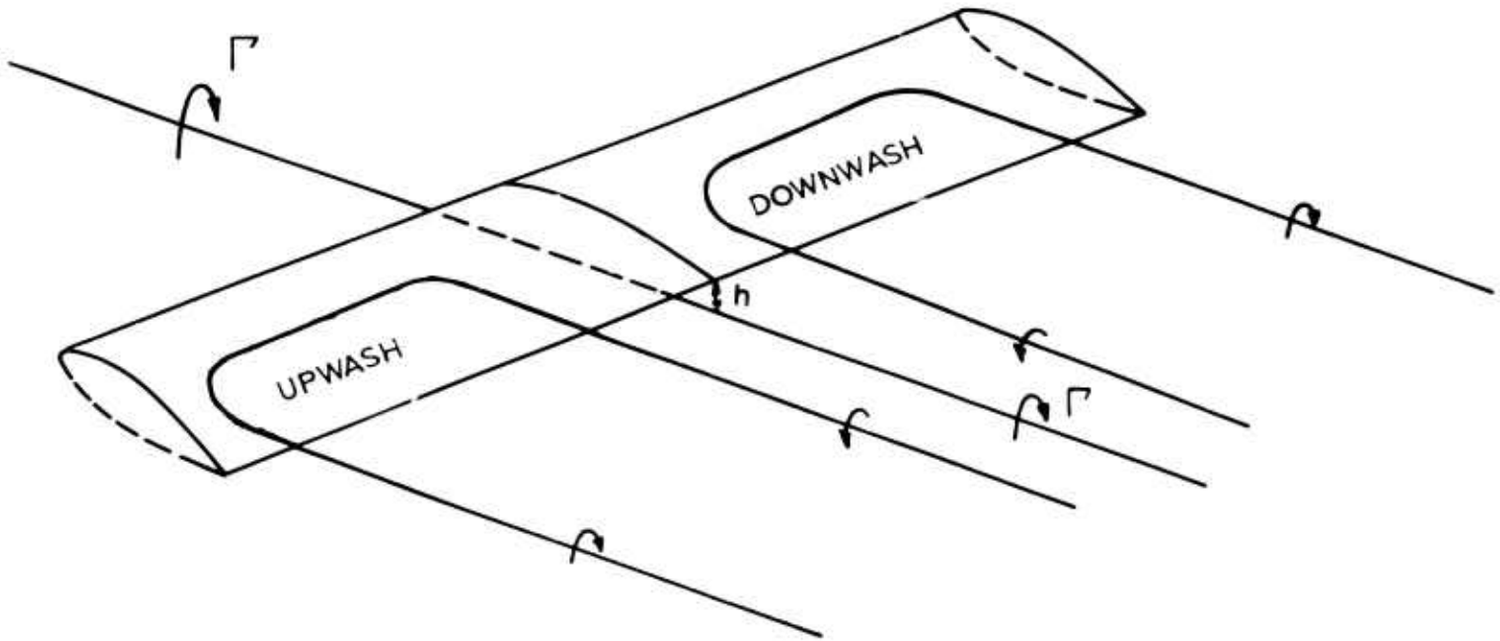

Figure 2. Trailing vortex system associated with interfering vortex.

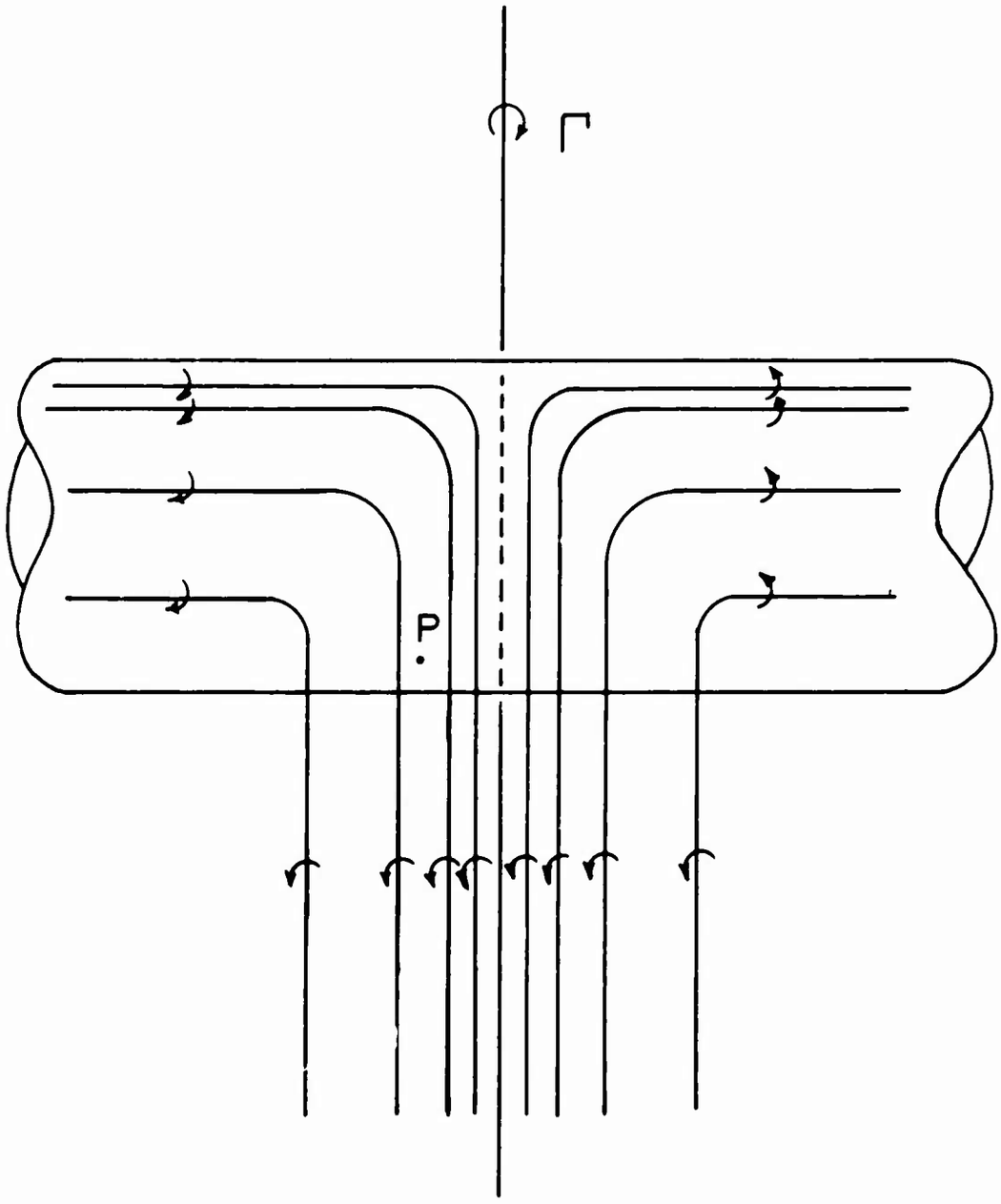

Figure 3 Distribution of vorticity close to the free vortex.

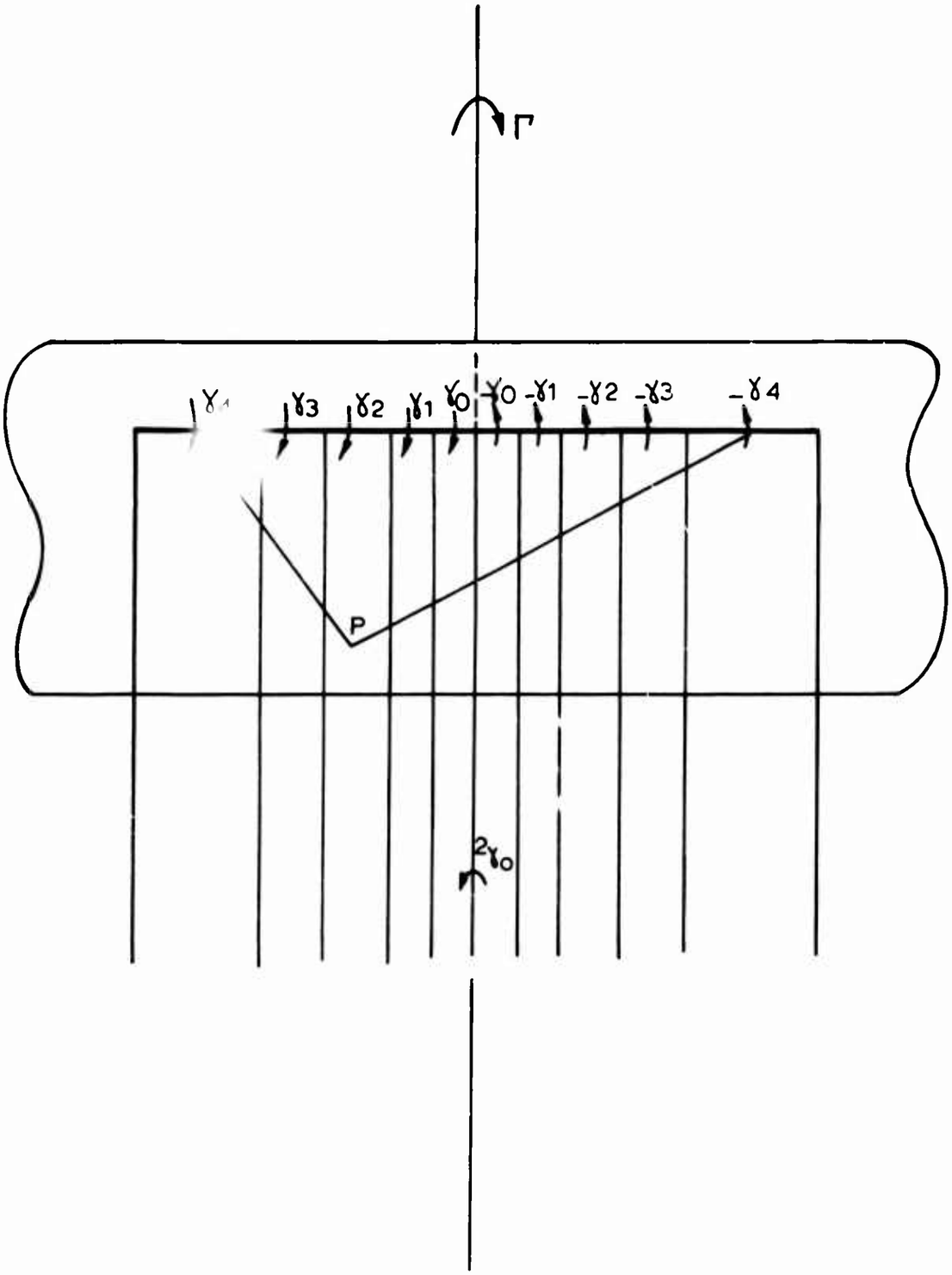

Figure 4. Bound vorticity contribution to the induced velocity.

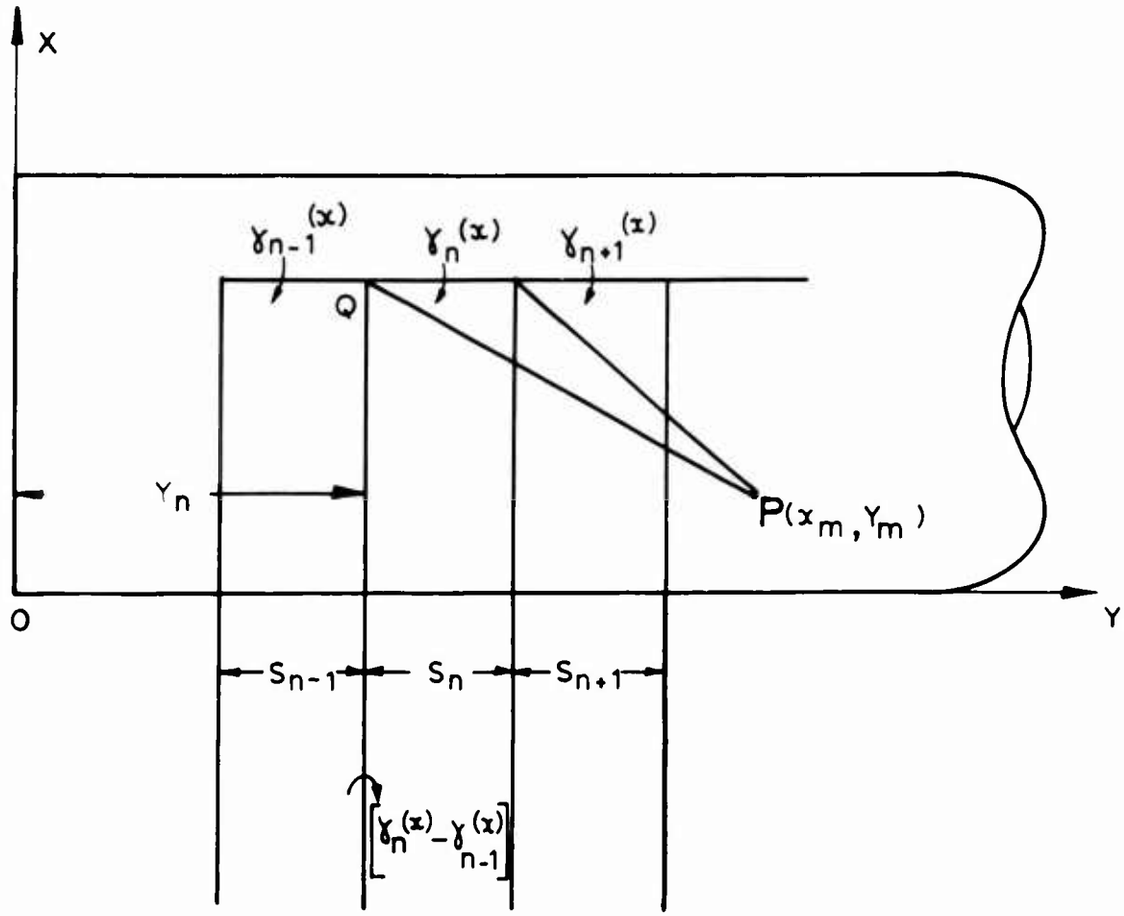

Figure 5. Diagram for calculation of induced velocity due to bound and trailing vortices.

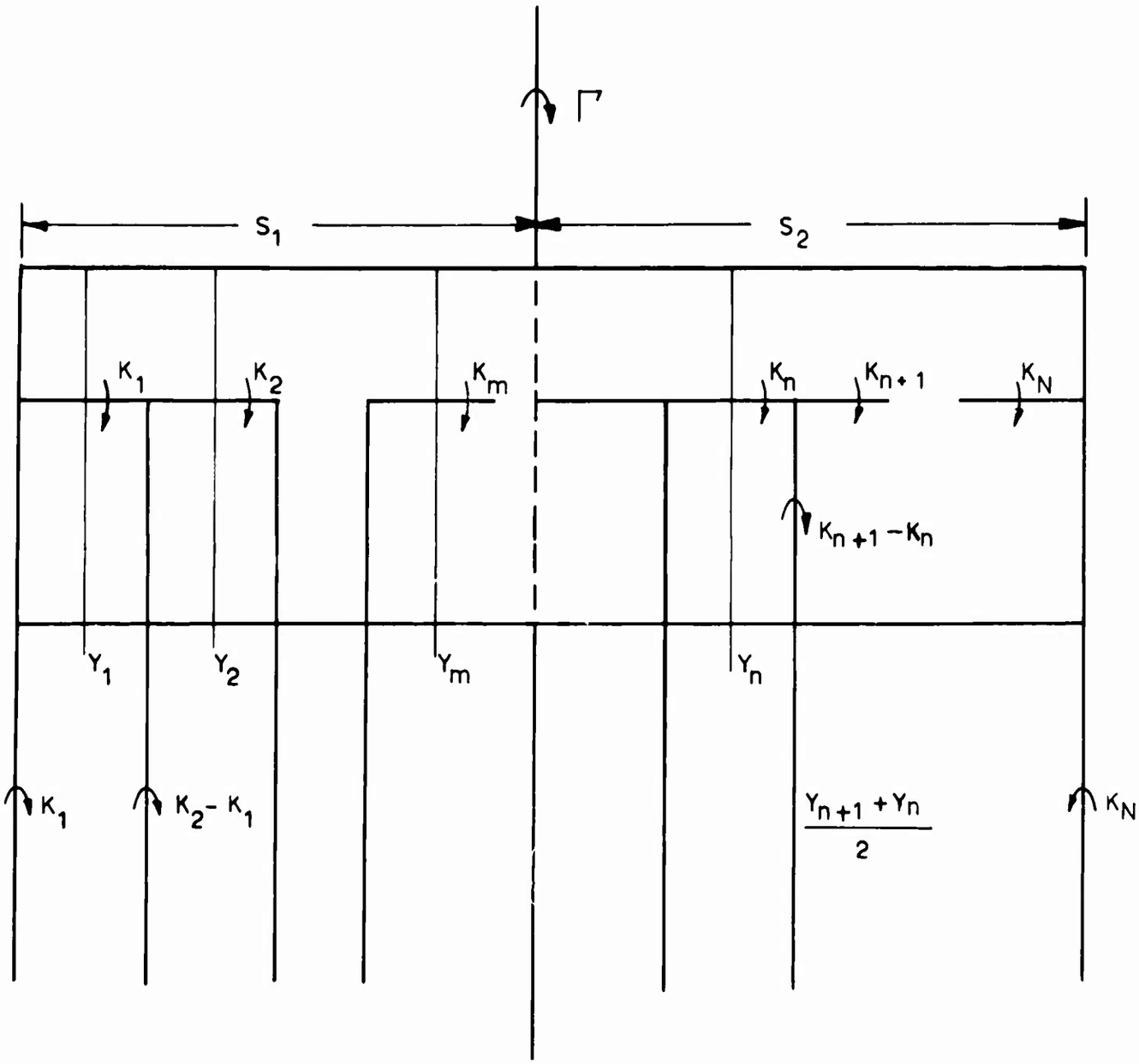

Figure 6. Notation for calculation of circulation distribution.

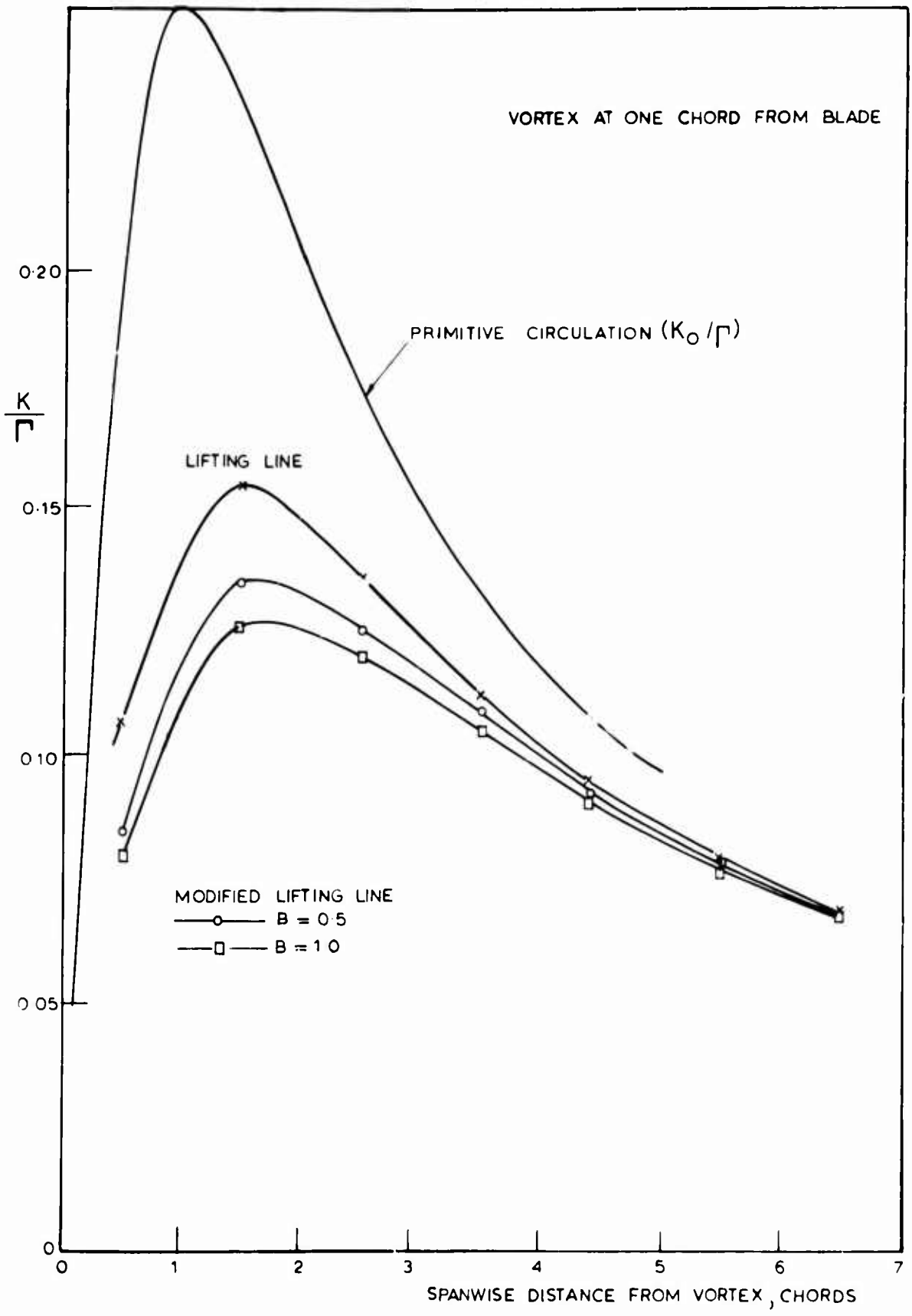

Figure 7. Spanwise loading distributions A R = 20 comparison of theoretical results.

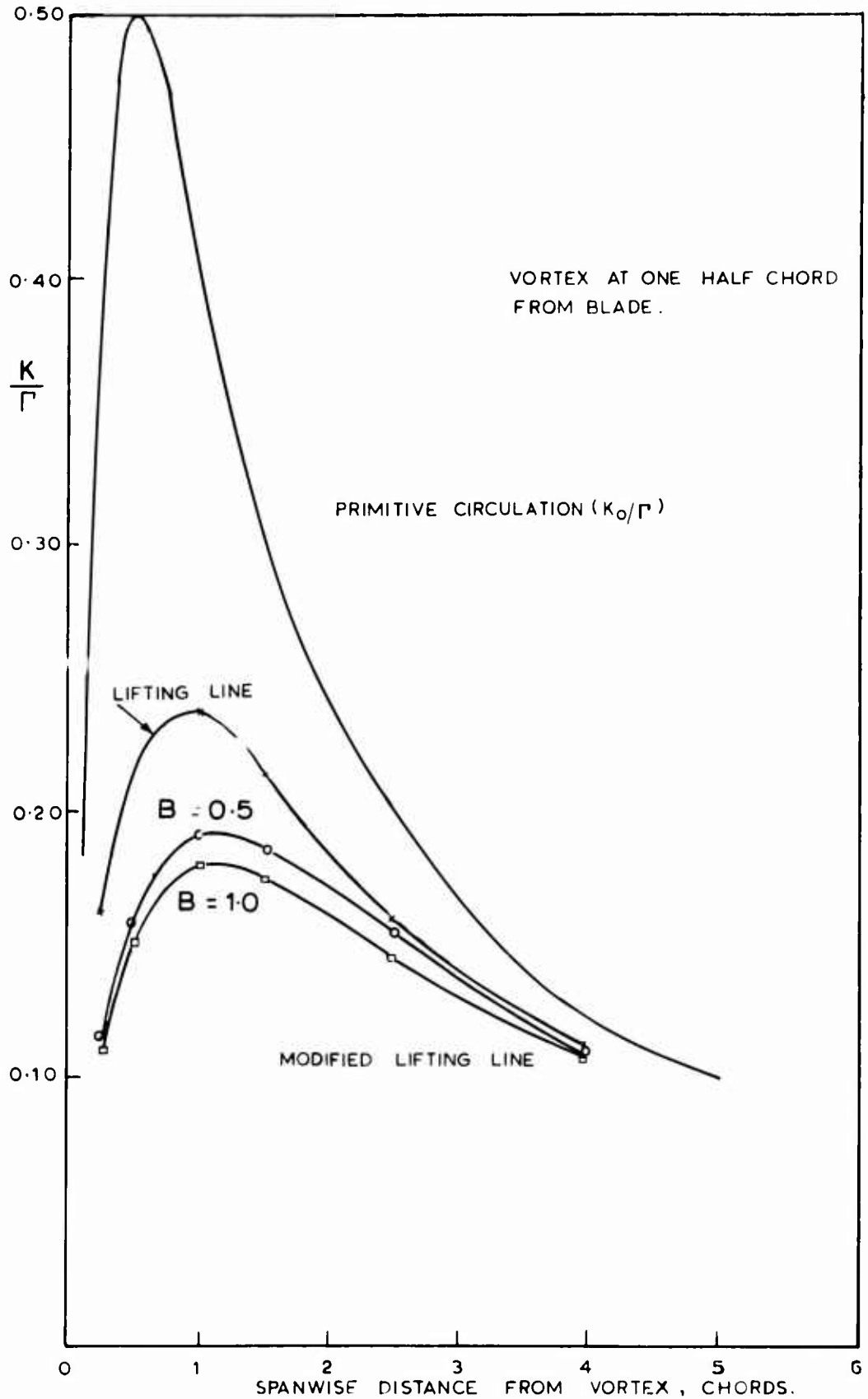

Figure 8 Spanwise loading distributions A.R. = 20 comparison of theoretical results.

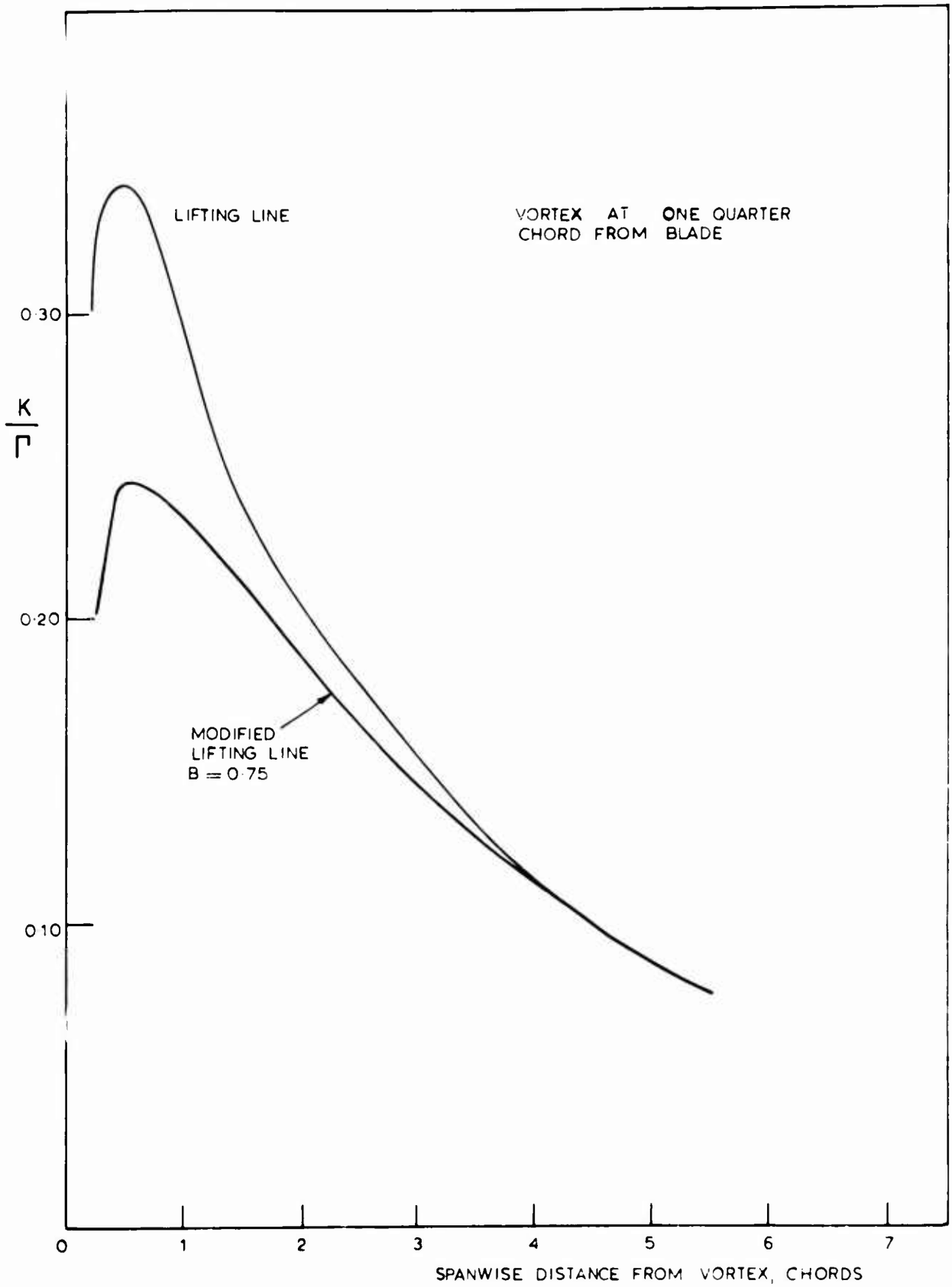

Figure 9. Spanwise loading distribution A.R. = 20 comparison of theoretical resuts

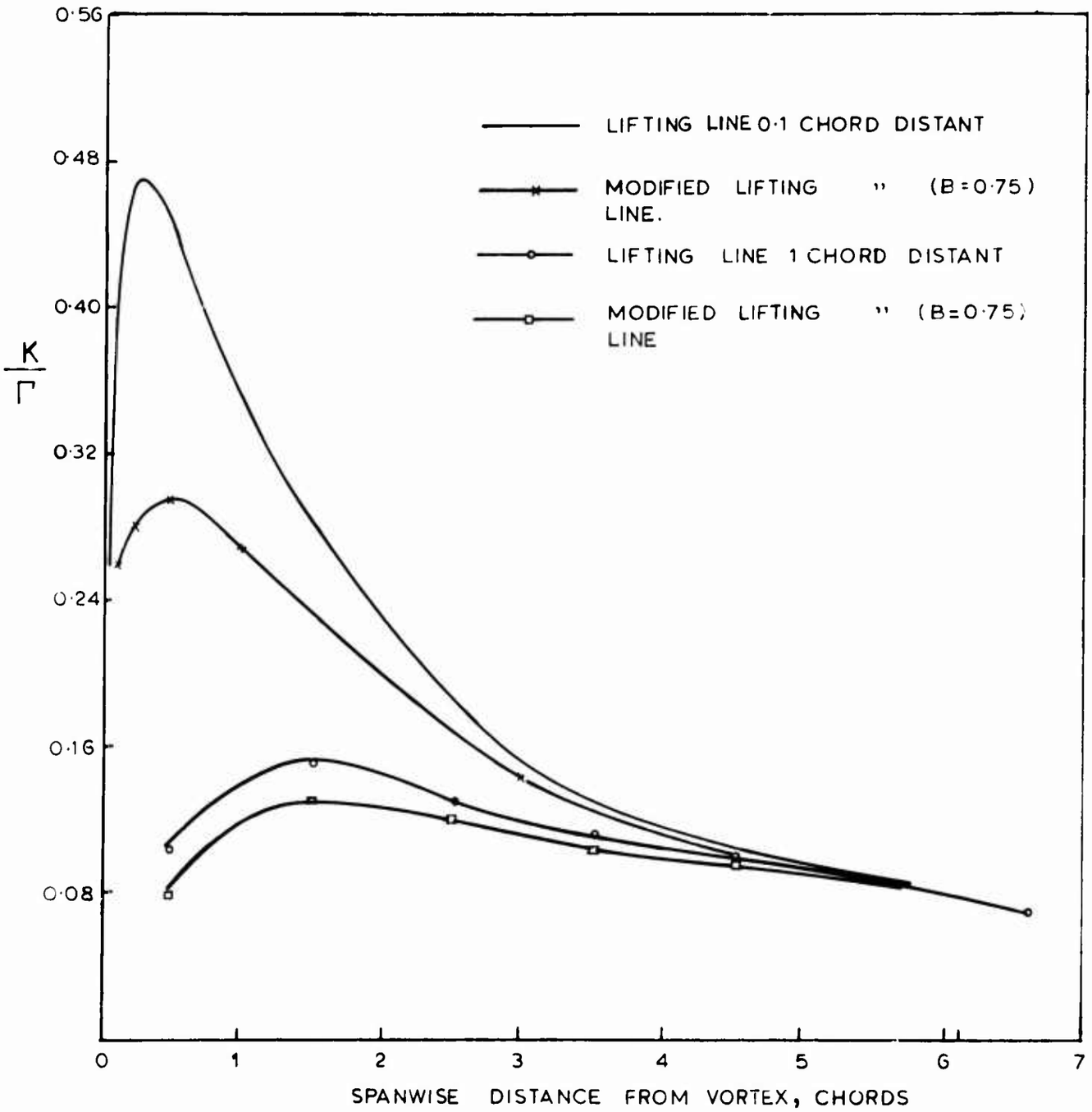

Figure 10 Effect of vortex height and method of solution on spanwise loading distribution. A.R. 20

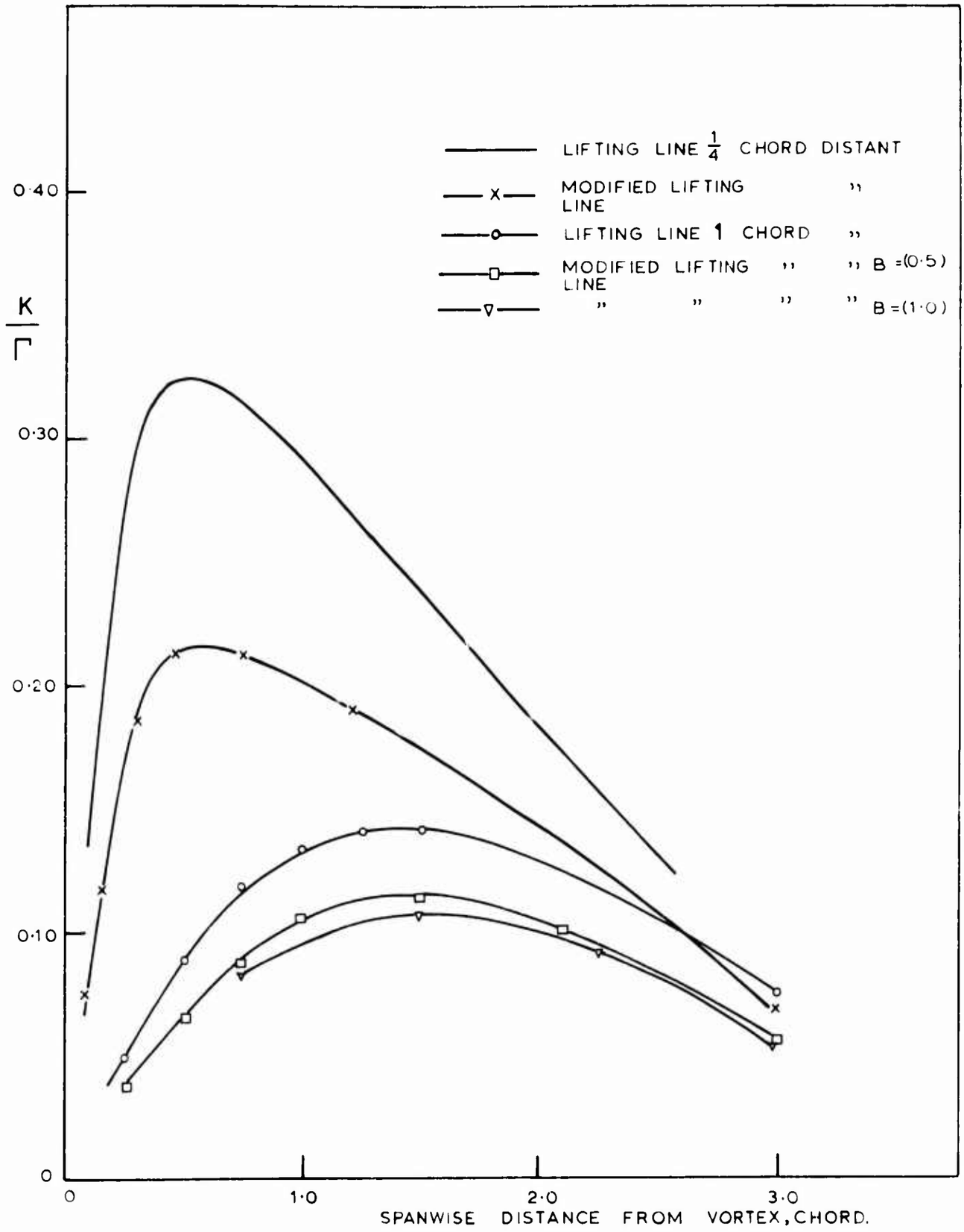

Figure 11 Effect of vortex height and method of solution on spanwise loading distribution. A. R.6

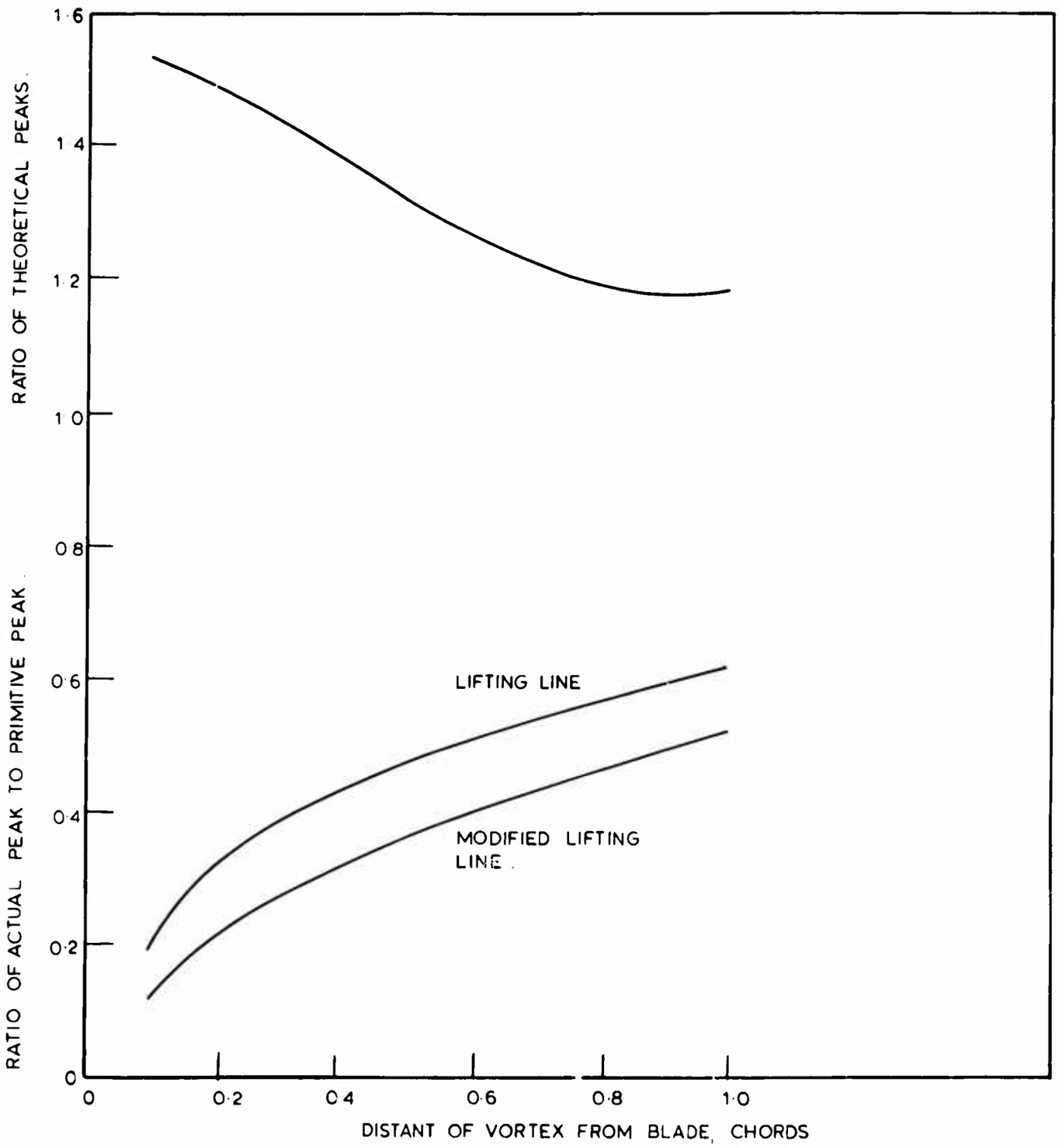

Figure 12 Influence of vortex height and method of calculation on peak circulation.