STANFORD RESEARCH INSTITUTE
MENLO PARK, CALIFORNIA

AD636321

August 1965

Final Report

BLAST-CLOSURE VALVES

Prepared for:

OFFICE OF CIVIL DEFENSE
DEPARTMENT OF THE ARMY
WASHINGTON, D.C.

CONTRACT OCD-PS-64-201
WORK UNIT 1121C

By: F. HUGHES-CALEY R. KIANG

SRI Project 4949-211

Distribution of this
document is unlimited.

This report has been reviewed in the Office of Civil Defense and approved for publication. Approval does not signify that the contents necessarily reflect the views and policies of the Office of Civil Defense.

BLAST-CLOSURE VALVES

By F. Hughes-Caley and R. Kiang
Stanford Research Institute
August 1965
Work Unit 1121C

DETACHABLE ABSTRACT

Four candidate blast closure valves for the ventilation openings of the domestic type personnel shelter are investigated theoretically. The calculated closing times of all four are one tenth or less of the required closing time, which is defined as the longest time the closure valve may stay open before the pressure build-up in the shelter exceeds the tolerable limit. For a 50-person shelter with an assumed tolerable limit of 5 psig pressure rise in the shelter, the longest required closing times for 100, 80, 60, and 40 psig ambient overpressures are 60, 75, 110, and 140 msec, respectively. Since analysis indicated that all four of the investigated candidate valves should close at rates much faster than these, the choice among valves will be determined only on the basis of reliability and cost. If sufficient confidence can be established in the physiological data given in Appendix F, the tolerable limit of pressure rise can be elevated to 23 psig (see Appendix E). In that case, ventilation openings will not require blast closures provided of course that the openings are well protected from penetration of blast-borne missiles and debris that might damage ventilating and other equipments or injure personnel.

ABSTRACT

Four candidate blast closure valves for the ventilation openings of the domestic type personnel shelter are investigated theoretically. The calculated closing times of all four are one tenth or less of the required closing time, which is defined as the longest time the closure valve may stay open before the pressure build-up in the shelter exceeds the tolerable limit. For a 50-person shelter with an assumed tolerable limit of 5 psig pressure rise in the shelter, the longest required closing times for 100, 80, 60, and 40 psig ambient overpressures are 60, 75, 110, and 140 msec, respectively. Since analysis indicates that all four of the investigated candidate valves should close at rates much faster than these, the choice among valves will be determined only on the basis of reliability and cost. If sufficient confidence can be established in the physiological data given in Appendix F, the tolerable limit of pressure rise can be elevated to 23 psig (see Appendix E). In that case, ventilation openings will not require blast closures provided of course that the openings are well protected from penetration of blast-borne missiles and debris that might damage ventilating and other equipments or injure personnel.

ACKNOWLEDGMENT

The authors would like to acknowledge the valuable assistance given by Norman E. Freeman, M.D., who conducted literature research on the physiological aspects of the work on this project.

CONTENTS

ABSTRACT. iii

ACKNOWLEDGMENT. v

LIST OF ILLUSTRATIONS ix

LIST OF TABLES. xi

NOMENCLATURE. xiii

I INTRODUCTION 1

A. State of the Art. 1

B. Description of the Problem. 1

1. Exclusion of Blast Overpressure. 3

2. Blast Resistance of Domestic and Public Shelters. 3

3. Blast Injury to Shelter Occupants. 4

II DISCUSSION OF THE GENERAL PROBLEM. 5

A. General 5

B. Summary of Broad Requirements 5

C. Summary of Assumed Limitations. 5

D. Discussion of Existing Valve Concepts 6

E. Existing Designs Other than Those Covered in Ref. 7 8

F. New Concepts. 10

G. Normal Ventilation. 11

1. General Analysis 11

2. Specialized Analysis of Candidate Valve Concepts 13

a. Chevron Valves. 13

b. BuShips Valve 16

c. Flat-Plate Valve. 17

d. Swing Valve 17

III OPERATION DURING THE BLAST WAVE. 19

A. Functional Analysis 19

1. Chevron Valve. 20
2. BuShips Valve. 21
3. Flat-Plate Valve 24
4. Swing Valve. 25

IV PREPARATIONS FOR FUTURE EXPERIMENTS. 27

V DISCUSSION 31
A. Physiological Data. 31
B. Blast Through Open Ports. 31
C. Negative Pressure 32

VI CONCLUSIONS. 33

VII RECOMMENDATIONS FOR FURTHER STUDIES. 35

APPENDIX A--CLOSING TIME OF A SIMPLE MASS-SPRING SYSTEM . . . 39

APPENDIX B--CHEVRON-VALVE CLOSING TIME. 43

APPENDIX C--SWING-VALVE CLOSING TIME. 51

APPENDIX D--PRESSURE RISE IN THE SHELTER. 55

APPENDIX E--PRESSURE RISE IN THE SHELTER
FOR THE CASE WHEN THE VALVES STAY OPEN. 63

APPENDIX F--PHYSIOLOGICAL DATA. 73

APPENDIX G--SKETCHES AND PHOTOGRAPHS OF BLAST-CLOSURE VALVES. 81

REFERENCES. 93

ILLUSTRATIONS

Fig. 1	Blast-Wave Peak Pressures (1-MT Bomb).	2
Fig. 2	Pressure vs. Time.	2
Fig. 3	Typical Poppet Valve	7
Fig. 4	Flash-Actuated Poppet Valve.	7
Fig. 5	Arrangement of Chevron Valve	8
Fig. 6	Swing Valve.	9
Fig. 7	BuShips Valve.	9
Fig. 8	Flat-Plate Valve	10
Fig. 9	Blast-Closure Valves as Flow Restrictors Connecting Two Large Volumes of Air.	12
Fig. 10	A Single Chevron Valve	14
Fig. 11	BuShips-Valve Closing Time--Comparison Between Theory and Experimental Data	23
Fig. 12	Overpressures vs. Closing Times of the Four Candidate Valves.	26
Fig. A-1	Simple Mass-Spring System.	41
Fig. B-1	Chevron-Valve Loading.	45
Fig. C-1	Swing-Valve Loading.	53
Fig. E-1	Pressure-Rise Curves for 100 psig Overpressure . .	67
Fig. E-2	Pressure-Rise Curves for 80 psig Overpressure. . .	68
Fig. E-3	Pressure-Rise Curves for 60 psig Overpressure. . .	69
Fig. E-4	Pressure-Rise Curves for 40 psig Overpressure. . .	70

Fig. F-1 Interspecies Comparison Showing the Overpressure Required for 50-Percent Mortality as a Function of Body Weight, with Extrapolation to Larger Animals 76

Fig. G-1 BuShips 11-by-15-Inch Blast Closure Valve. 83

Fig. G-2 Chevron Valve. 84

Fig. G-3 AFM Blast-Actuated Valve 85

Fig. G-4 Chemical Warfare Valve--Model E-4. 86

Fig. G-5 Minuteman Valve. 87

Fig. G-6 Stevenson Valve. 88

Fig. G-7 Breckenridge Valve 89

Fig. G-8 The "Luwa" Blast Valve 91

TABLES

Table I Dimensions of Chevron Valve Elements vs. Number of Elements Required per Inlet or Exhaust Port. . . 16

Table II Comparative Calculated Results of the Four Candidate Valves. 19

Table III Parameters of Dimensional Analysis. 28

Table F-I Shock-Tube Mortality Data for Fast-Rising Long-Duration Overpressures when Incident and Reflected Pressures are Applied Almost Simultaneously 78

Table F-II Pressure Tolerance of the Eardrums of Dog and Man. 79

NOMENCLATURE

Term	Units	Definitions
A	in^2	Area
A_o	in^2	Total maximum opening area of all valves
a	in	Length of the rectangular holes of a Chevron valve
b	in	Width of the rectangular hole of a Chevron valve
b_p	in	Width of the Chevron-valve plate
C_D		Orifice coefficient
D	in	Diameter of the valve plate
d	in	Diameter of the circular hole
E	lb/in^2	Modulus of elasticity
F	lb	Force
g	in/sec^2	Gravitational constant
h	in	Thickness of the valve plate
I	in^4	Moment of inertia of the valve plate
k	lb/in	Spring constant
L	in	Half-chord length of a Chevron-valve plate
m	$lb\text{-}sec^2/in$	Mass of the valve plate
Δp	$in\text{-}H_2O$	Pressure differences across the valve
P	lb/in^2	Pressure
P_{1a}	lb/in^2	Overpressure (absolute)
P_{1g}	lb/in^2	Gauge ambient pressure (overpressure)
P_{2a}	lb/in^2	Absolute pressure in the shelter

$(P_2)_o$	lb/in^2	Initial absolute pressure in the shelter (atm pressure)
$P_{2a}\|_{t=t_c}$	lb/in^2	Maximum pressure rise in the shelter
$\left(\frac{dP_{2a}}{dt}\right)_{max}$	$\frac{lb}{in^2\text{-sec}}$	Maximum rate of pressure rise in the shelter
P_o	lb	Blast force on the valve plate
P_{2d}	lb/in^2	Pressure rise immediately downstream of the valve
q	in^3/sec	Volume flow rate
R	$\frac{in\text{-}lb}{lb\text{-}^\circ R}$	Gas constant for air
T	$^\circ R$	Temperature of the air
t_c	sec	Closing time
t_p	sec	Positive pressure phase duration
V	in^3	Interior volume of the shelter
W	$\frac{lb\text{-}sec}{in}$	Mass flow rate
w	lb/in	Load per unit length of the valve
x-y		Rectangular coordinates
ρ	$\frac{lb\text{-}sec^2}{in^2}$	Mass per unit length of the valve plate
ρ_v	$\frac{lb\text{-}sec^2}{in^4}$	Volume density of the valve plate
ρ_{air}	$\frac{lb\text{-}sec^2}{in^4}$	Density of air
δ	in	Distance between valve plate and valve seat
θ_{max}	rad	Maximum opening angle
σ_w	lb/in^2	Working stress of the material of the valve plate
ν		Poisson's ratio

I INTRODUCTION

A. State of the Art

Critical phenomena associated with nuclear explosions are, among others:

(1) Thermal and nuclear radiation

(2) Blast wave and ground shock

(3) Fallout.

These phenomena are considered in detail in Ref. 1.* However, only means for protection against blast-generated overpressure are discussed in this report.

According to Ref. 1, immediately following a nuclear explosion an air blast wave having a sharply rising pressure front is propagated outward radially from point zero. Behind the peak pressure front, the overpressure decays very rapidly. As the blast wave travels further away from point zero the pressure peak itself also drops very sharply (see Fig. 1).

At a distance away from point zero, depending on the magnitude of the explosion, the peak overpressure will have decayed to 30 psig, which, upon impingement against a rigid wall, would result in a reflected pressure of about 100 psig. If we consider time zero as the point at which the peak overpressure reaches this distance, subsequent pressure-vs.-time relations appear somewhat as in Fig. 2 (Ref. 2). Note in Fig. 2, that following an overpressure duration totaling about one second, a negative pressure phase commences, progressing to about -3.5 psi and returning to zero in a total of about 8 seconds.

B. Description of the Problem

Shelters used to protect personnel from injury by the blast wave following a nuclear explosion must also provide protection against

---

*References are listed at the end of the report.

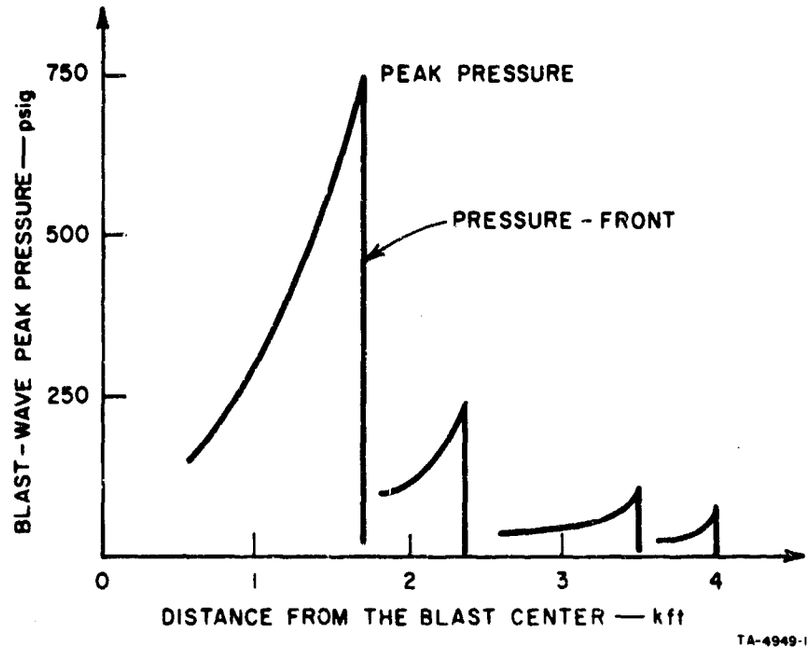

FIG. 1 BLAST-WAVE PEAK PRESSURES (1-MT bomb)

thermal and other effects of the explosion. This report, however, concerns only the protection of shelter occupants from the effects of high blast overpressure, which, if not prevented from penetrating to the shelter interior, can of itself result in severe bodily injury or death.

Probably, blast closure requirements for personnel shelters are far less severe than for military shelters because of certain delicate equipments in the latter. The shock pressure limits used in this study have been taken from a physiological study, Ref. 3.

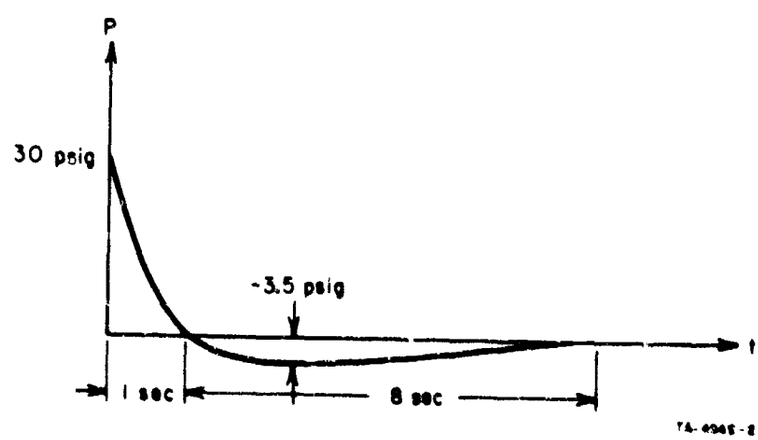

FIG. 2 PRESSURE vs. TIME

1. Exclusion of Blast Overpressure

A shelter is normally provided with a number of openings to the outside atmosphere so as to permit ventilation and also ingress and egress under other than "crisis" conditions. In the event of attack warning, all openings except those used for purposes of ventilation will presumably be closed immediately against the effects of the anticipated blast. Nevertheless, it will be desirable if not essential to admit and circulate ventilating air from outside the shelter up to the instant of blast impact, since it seems very unlikely that individual personnel shelters will receive warning of an imminent shock in time to manually close a blast valve. Ventilation ports must therefore be left open wherever possible until the moment of blast arrival. They should be operable by the blast and not be dependent on human or other energy source. The rate of closure must be such that leakage of the blast wind to the shelter interior does not cause a sharp rise in pressure there, nor rise to a level high enough to be harmful to the occupants.

To this end a considerable portion of the project effort discussed in the body of this report was directed toward an evaluation of existing designs of blast closure valves for possible use in domestic shelters, and the consideration of other modified or new and alternative designs.

2. Blast Resistance of Domestic and Public Shelters

Past experimental studies appear to point to 100 psig* as the probable maximum blast overpressure that the typical existing building designated as a blast shelter for personnel, could withstand before partial or complete collapse. However, since no precise information on the point appears to be available to date, the above pressure limit has been adopted as one of the base parameters for calculation during the research reported here.

---

*All load calculations in this report are based on the assumption that this figure refers to the reflected and not the incident pressure.

3. Blast Injury to Shelter Occupants

Data from a number of physiological studies, and particularly Ref. 4, appear to indicate that if an overpressure reaching a shelter ventilation port at 100 psig can be attenuated to a point where leakage into the shelter does not result in an interior peak overpressure exceeding 5 psi, the occupants will sustain little or no blast injury. It has been the purpose of research efforts described in the body of this report, to investigate means for achieving this degree of attenuation in the simplest, most reliable and inexpensive manner possible.

II DISCUSSION OF THE GENERAL PROBLEM

A. General

Almost no really precise and conclusive experimental evidence appears to be available relating to the physiological response of man to overpressures that result from nuclear blast.

So far as can be discovered, the most comprehensive information is contained in Refs. 3 and 4 (see Appendix F).

B. Summary of Broad Requirements

In order to afford adequate protection, a valve must meet the following requirements:

(1) In its "open" state, it must be capable of handling a required flow of ambient ventilating air and of transmitting this air to the shelter with minimum pressure drop across the valve.

(2) It must be a "passive" device (i.e., be able to close without any dependence upon the occupants of the shelter or other energy sources and sensors), and have a closing rate such that leakage across the valve before complete closure is achieved will not result in a damaging pressure rise within the shelter.

(3) It must function with a very high degree of reliability and require little or no maintenance over long periods of inaction.

(4) It must be of robust, simple, low-cost construction.

C. Summary of Assumed Limitations

The assumed limitations of a valve used for our purposes are as follows:

(1) Sustain a 100-psig maximum blast-wave overpressure at valve ports

(2) Be adequate for a 50-person shelter having a volume of 5000 cu ft (Ref. 5)

(3) Allow a 5-psig maximum pressure rise within the shelter due to bypass leakage during valve closure, the rise to be at the lowest rate achievable.

(4) Allow a maximum of 3000 cfm across the valve--i.e., 60 cfm per occupant (Ref. 5)--and a pressure drop across the valve, of less than 0.17 inch H_2O (Ref. 6), (essential in case of power failure, when ventilating equipment must be "muscle-powered" by the shelter occupants).

D. Discussion of Existing Valve Concepts (Refs. 7, 8, and 9)

Investigation makes clear that existing commercially available valves (or valve designs) discussed in Refs. 7, 8, and 9 are mostly quite large and of expensive and elaborate construction. They were evidently intended to afford protection to equipment and personnel occupying hardened installations against very high blast-wave overpressures. They are, with two exceptions, "positive locking." That is to say, some type of locking device is included in the closure mechanism, the purpose of which is to prevent the valve proper from bouncing on its seat or from reopening during a negative phase of the blast wave. A typical example of this is the poppet valve shown in Fig. 3. Both the Minuteman and the Titan II blast valves are of this type.

The moving elements of these and others in the group of design concepts discussed in Refs. 7, 8, and 9 have considerable mass and therefore large inertia. As a consequence, the time required to close them during the blast-wave attack is appreciable (in the order of 100 msec). Therefore, in order to achieve complete closure in time to prevent an unacceptable pressure rise within the facility or shelter, most of the valves in this group are designed for remote-sensor triggering--i.e., through light, heat, pressure, or other effects resulting from a nuclear explosion--and are power-operated (see Fig. 4).

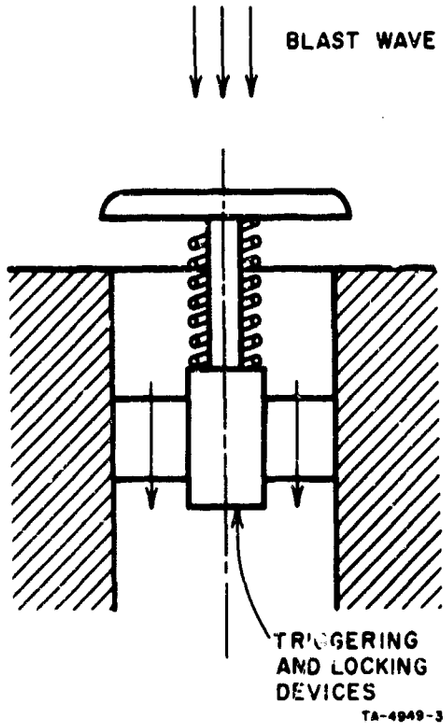

FIG. 3 TYPICAL POPPET VALVE

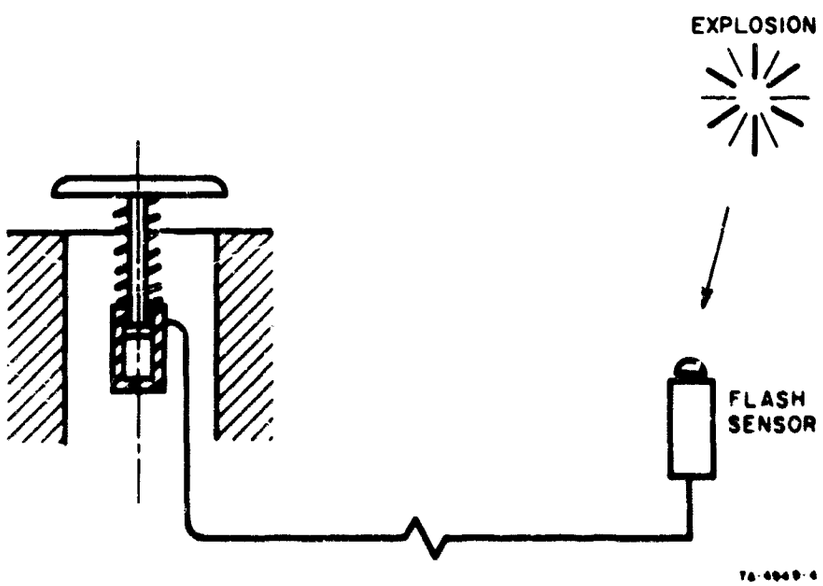

FIG. 4 FLASH-ACTUATED POPPET VALVE

From the group of design concepts discussed in Ref. 7, only two were selected as candidates (in a modified form) for application to domestic shelters. They are the "Chevron valve" and the "Swing valve." (See Figs. 5 and 6.) Details of them are given later.

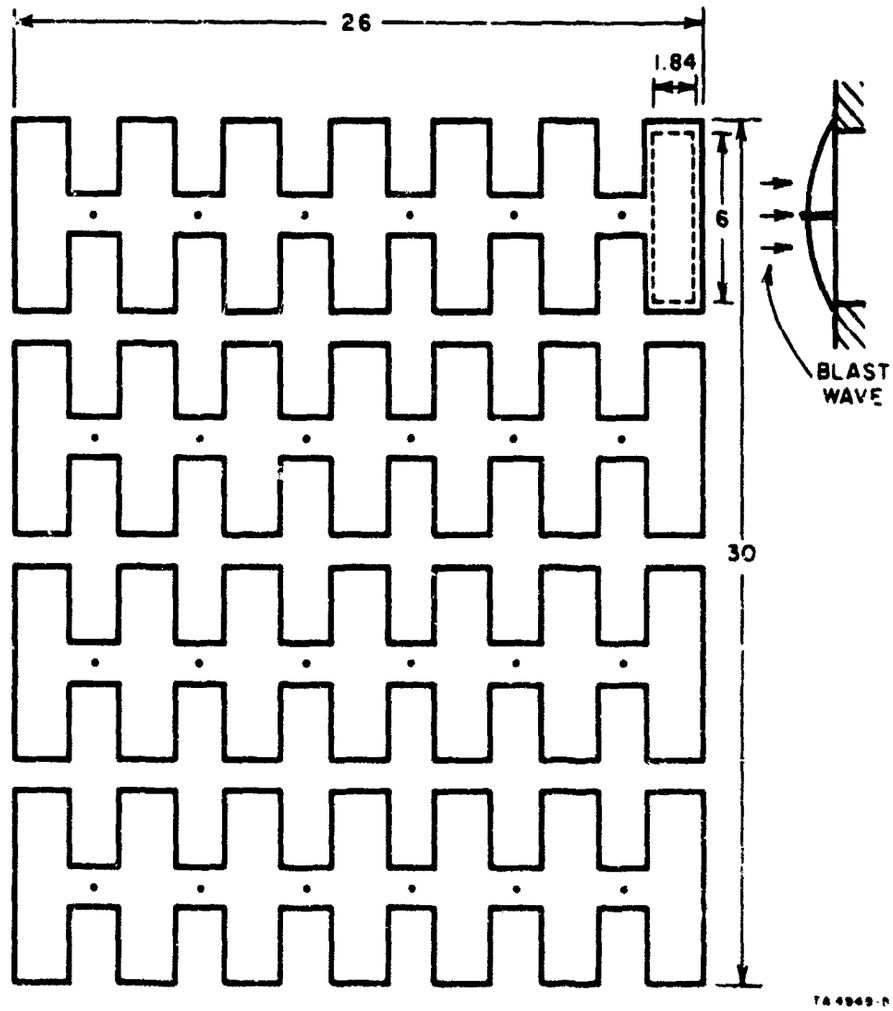

FIG. 5 ARRANGEMENT OF CHEVRON VALVE

E. Existing Designs Other than Those Covered in Ref. 7

Several designs having interesting possibilities were uncovered during investigations in search of other existing blast closure concepts that might be suitable for use in public or domestic shelters, or that might be easily adapted to that end. One is referred to as the

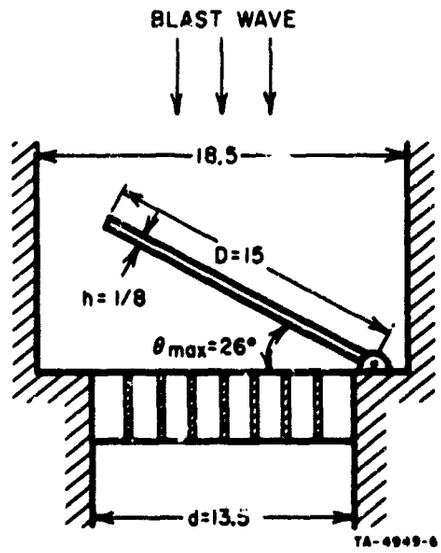

FIG. 6 SWING VALVE

"BuShips Vane Type Valve," which has been selected as one of the candidates for this study (Fig. 7). Two other possible designs are those recently developed by Messrs. Breckenridge and Stevenson of The Naval Civil Engineering Laboratory, Port Hueneme, California. The

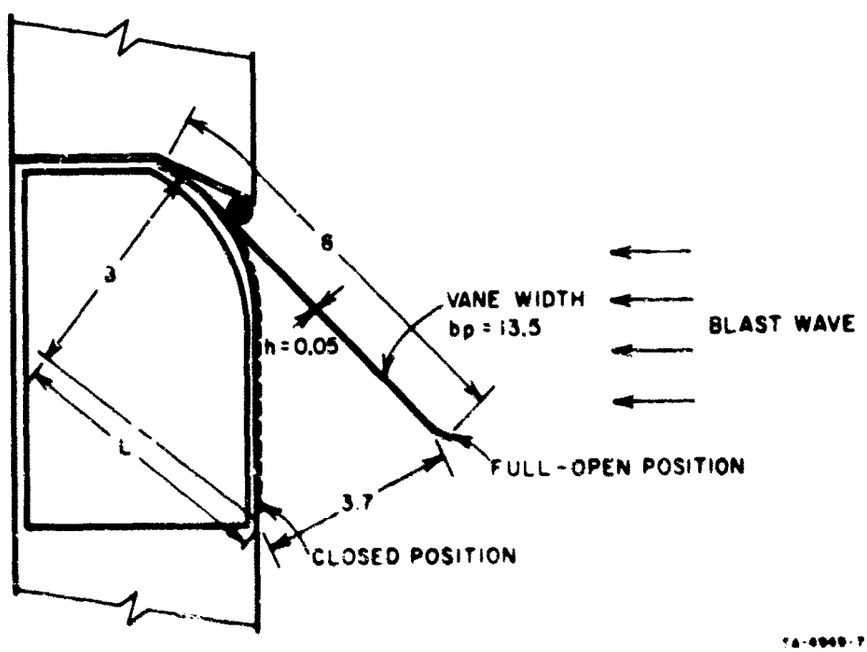

FIG. 7 BuSHIPS VALVE

fourth is a valve made by Luwa AG. Zurich being offered for sale in the USA (see Appendix G for presently available detail).

F. New Concepts

As a consequence of the investigation of existing valves and in order to expand the list of new candidate valve designs, several design concepts that are directly oriented toward use in public or domestic shelters were considered as having considerable potential. Of these, one was chosen as eligible for further consideration and is sketched in Fig. 8. Both this and the three modified versions of existing designs are of simple construction, and should be relatively inexpensive

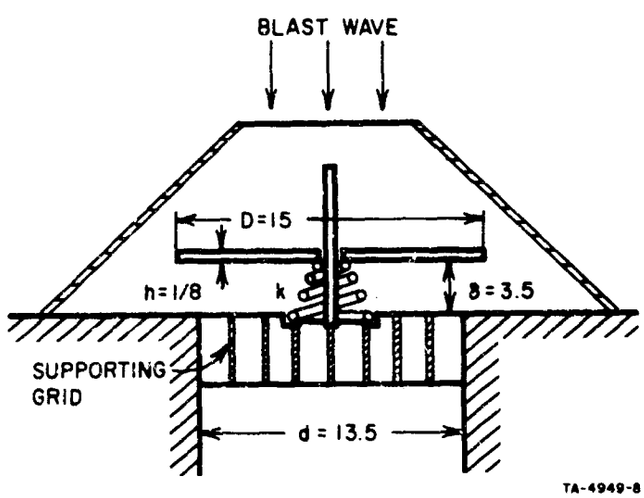

FIG. 8 FLAT-PLATE VALVE

to produce in quantity. All would be blast-operated and three of them are self-resetting after passage of the blast wave [the Janeth (Swing Type) can be made resetting by adding a spring]. No means for locking against negative pressure has been considered. The reason for this is that if human beings can stand a positive pressure rise of 5 psi, it is presumable that the 3.5-psi negative pressure will not cause serious injury. However, in the event that future experimental work indicates that negative pressure may exceed 3.5 psi and/or that even this can result in serious injury, locking devices or, preferably, check-valve elements that are open against blast leakage but capable of closing

against negative pressures could be included in the overall closure design. This would of course result in a cost increase.

Due to the low mass of the moving elements, operating responses of the proposed new and modified designs are expected to be rapid (i.e., in the order of 1 msec).*

Since this general group of simple blast-closure valves forms the main field of interest in this report, a detailed theoretical analysis of the characteristics peculiar to each candidate is given later in the body of the report.

G. Normal Ventilation

Before going into the dynamic studies of the different blast-closure valves, a study of the normal ventilation needs under pre- or post-crisis conditions was necessary to provide the needed information, such as the total required opening area of the valves, the number of valve elements needed for each type, their dimensions, etc.

1. General Analysis

A flow-rate-vs.-pressure-drop relation for each type of valve could be obtained by using a method similar to the one employed in Ref. 7--that is, a summing of the pressure losses at every section of the valve where the flowing air is being contracted, expanded, or re-directed. However, quantities such as contraction ratios or bend radii could not be clearly defined at this stage. This made quantitative calculations imprecise.

The flow problem may be viewed on a large scale, instead of approaching it through a detailed study of the complex valve configurations. For example, the valves, which separate the ambient atmosphere

---

*The calculated results for the four candidate valves give a closing-time range from 0.4 msec to 9.6 msec (see Fig. 15 and Table II). These numbers will, of course, be a little different if other dimensions, materials, and spring constants are used in the calculations.

on one side and that of the 5000-cu-ft shelter on the other, can be looked upon as a single flow restrictor connecting two large reservoirs (Fig. 9). The validity of this point of view arises from the following considerations. The kinetic energy terms in an energy balance are negligible compared to the enthalpy. Consequently the flow process is one of constant enthalpy and therefore the orifice equation applies.

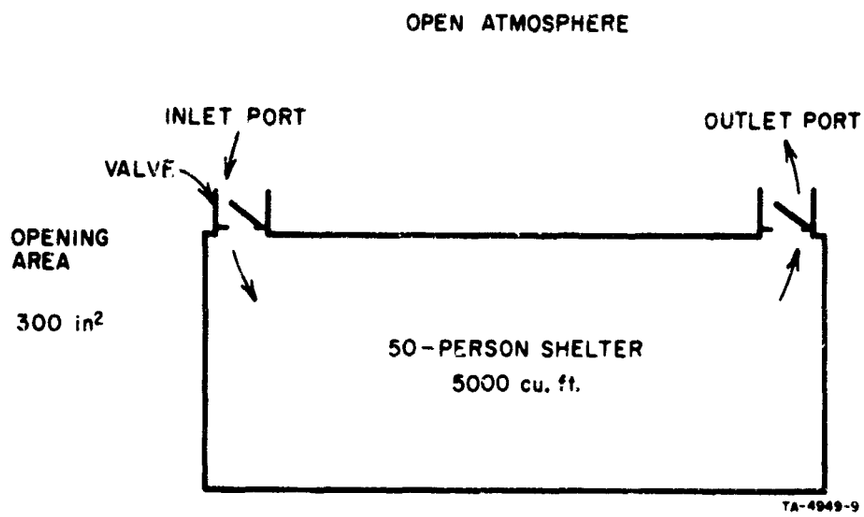

FIG. 9 BLAST-CLOSURE VALVES AS FLOW RESTRICTORS CONNECTING TWO LARGE VOLUMES OF AIR

The advantage of this point of view is that it allows us to disregard the structural complexities of a specific valve type and to treat the problem as one of flow through a single orifice. Now, if a further assumption is made that flow through the valve is at a low speed (in view of the small pressure drop), then the incompressible flow equation for orifice is directly applicable. The orifice equation is the direct consequence of Bernoulli's equation for incompressible fluids:

$$q = C_D A \sqrt{\frac{2}{\rho_{air}} (\Delta p)} \qquad (1)$$

where C_D is the orifice coefficient ranging from 0.6 to 1.0.

Applying Eq. (1) to the present problem with

$$q = 3000 \text{ cfm} = 86{,}400 \text{ in}^3/\text{sec}$$

$$(\Delta p) = 0.17 \text{ in } H_2O$$

$$\rho_{air} = 1.13 \times 10^{-7} \text{ lb sec}^2/\text{in}^4$$

then

$$C_D A = 262 \text{ in}^2 \quad .$$

Set $C_D = \frac{262}{300}$ for convenience; the area "A" is thereafter taken as 300 in^2. Note, however, that the area "A" just obtained is the total opening area of the air inlet valve for the 50-person shelter. An identical valve is needed for exhaust air. Therefore, the actual opening area of the shelter to the outside atmosphere is equal to 2A, or 600 in^2.

(The normal personnel entrance and all other openings to the shelter are assumed to be securely closed and reinforced so that no unprotected openings exist in the shelter boundaries.)

2. Specialized Analysis of Candidate Valve Concepts

Having arrived at the total opening area of 300 in^2 (for one port), the next step is to look into the special configurations of each type of valve and calculate the dimensions and full-open attitudes of each type.

a. Chevron Valves

The Chevron valves as shown in Fig. 5 are composed of a number of elementary flaps, each one of which will be referred to as a single Chevron valve. Each valve plate is formed into an arch such that the ventilating air can flow through the clearances on both sides except when blast overpressures close the valves. One attractive feature of the Chevron valve is that a convenient number of single valves can be grouped to provide the required amount of ventilation for shelters of different sizes. As a blast wave impinges, these valves will simply be flattened, thus sealing off both the inlet and the exhausting ports.

In the following, only a single Chevron valve element will be analyzed (Fig. 10).

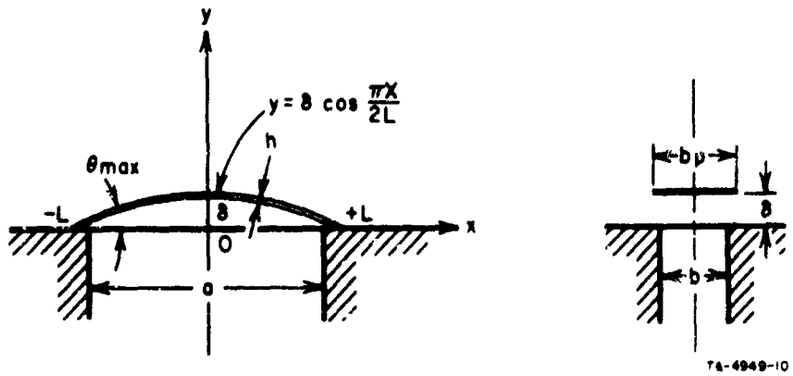

FIG. 10 A SINGLE CHEVRON VALVE

In order to express the result in a simple form, a cosine curve is assumed for the theoretical flap shape even though a production flap may for practical reasons be of modified configuration. Furthermore, the chord length 2L is arbitrarily set to be 1.2a. Here, "a" is the length of the rectangular hole, which will be the only independent variable. Another arbitrary limitation is on the angle θ_{max}. This angle must be small so that the two ends of the valve plate can slide freely as the blast wave arrives. The angle has been arbitrarily set at 30°--i.e., $\theta_{max} = 30^\circ$ for purposes of analysis.

As θ_{max} is fixed, δ will be determined by L only; the δ - L relation can be obtained as follows:

The equation of the valve plate is

$$y = \delta \cos \frac{\pi x}{2L} \quad . \tag{2}$$

The slope at x = -L is

$$\left.\frac{dy}{dx}\right|_{x=-L} = \theta_{max}$$

$$= -\delta \frac{\pi}{2L} \sin \left.\frac{\pi x}{2L}\right|_{x=-L}$$

$$= \frac{\delta\pi}{2L} \quad .$$

Hence,

$$\delta = \frac{2\,\theta_{max}}{\pi} L \quad . \tag{3}$$

The area bounded by the cosine curve and the x-axis can easily be obtained by an integration

$$A_c = 2 \int_0^L \delta \cos \frac{\pi x}{2L}\, dx$$

$$= 4 \frac{\delta L}{\pi} \quad .$$

It is reasonable to design the valve so that the area of the rectangular hole a × b equals the two side openings--i.e.,

$$ab = 8 \frac{\delta L}{\pi}$$

$$= \left(\frac{4L}{\pi}\right)^2 \theta_{max} \quad . \tag{4}$$

Equation (4) gives the opening area of a single Chevron valve element. Or, if a is given, b can be calculated from Eq. (4). The analysis of a single-element valve is now complete.

Based on Eq. (4) and a total required area of 300 in^2, the number of single valve elements needed to form either the inlet or the exhaust port can be calculated for a given value of a. With $\theta_{max} = \frac{\pi}{6}$ and 2L = 1.2a, Table I illustrates this. The smaller valves, due to their smaller masses, will respond faster to the blast wave and therefore keep the pressure rise in the shelter lower. However, the

Table I

DIMENSIONS OF CHEVRON VALVE ELEMENTS vs. NUMBER OF ELEMENTS REQUIRED PER INLET OR EXHAUST PORT

a (in)	b (in)	Area of a Single Valve Element (in^2)	No. of Valve Required Elements	Closing Times* (msec)
3.0	0.916	2.75	110	0.2
6.0	1.840	11.10	28	0.37
9.0	2.750	24.80	12	0.56
12.0	3.670	44.10	7	0.74

*These closing times are calculated based on a shock overpressure of 100 psig, using Eq. (B-14) of Appendix B. For weaker shock overpressures, the closing time will be longer, yet the pressure rise in the shelter will not be any higher (see Table II).

larger number of smaller elements needed to provide sufficient ventilation will undoubtedly result in increased cost. On the other hand, large-sized valve elements, even though costing less, will respond more slowly. While no design optimization is envisioned during the present project, undoubtedly this should be a subject for study during a later phase.

In order to compare the performance of Chevron valves with that of the other candidate valves, attention is directed to the second row in Table I--i.e., the valve element having an opening 6 in × 1.84 in. It is necessary to leave reasonable spacings between the individual valves. A suggested arrangement of these elements is schematically shown in Fig. 5.

b. "BuShips" Valve

Figure 7 shows the side view of a BuShips valve. Several of these can be stacked together to provide the required amount of ventilation (see Appendix G). Multiplexing of several small-capacity closure assemblies where greater capacity is required would seem to be

more desirable in the interest of tooling standardization, inventory, and cost for large quantities than it would be to manufacture and stock a range of assemblies of various capacitors.

The valve shown in Fig. 7 has an opening area of about 50 in^2; therefore, six of these elements are needed to make a total of 300 in^2 (i.e., to provide 3000 cfm at a pressure drop of 0.17 in H_2O).

c. Flat-Plate Valve

As shown in Fig. 8, the lid of the valve is a metal plate. This plate may be quite thin, but reinforced by radially disposed, formed ribs so as to maintain stiffness. However, in the analysis, we have assumed a flat circular aluminum plate of 1/8-inch thickness. The plate is held 3.5 inches above the supporting grid by a coil spring so that an opening area of 150 in^2 is available for ventilation. With the dimensions given in Fig. 8, two such valves are needed for the inlet port of the model shelter in order to provide 3000 cfm. They could be duplicated at the exhaust port. Also shown in Fig. 8 is a suggested cone-shaped cowl with an open top which probably would be more effective than the cylindrical side wall shown in Fig. 6 for shielding the valve against blast waves coming from the side. This cone-shaped cowl in modified form can be applied to Chevron and BuShips valves. It is also appropriate to mention here that the valve plate may alternatively be made of materials other than metal. If some kind of thermally insensitive, low-density, spongy type of material can be used and suitably supported against collapse, it will probably improve the cushioning and damping effect as the valve is slammed shut by the blast wave.

d. Swing Valve

The valve of dimensions shown in Fig. 6 will provide an air flow of 1500 cfm; therefore two of those will be needed for the inlet port of the shelter and two for the outlet port.

As in the case of the flat-plate valve in Fig. 8, the valve lid is assumed to take the form of a flat aluminum circular plate of 1/8 in thickness. Here also the final design may employ thinner plate with radially formed reinforcing ribs.

All three of the foregoing valves are intended to be self-resetting after the blast wave has passed. The swing valve may be arranged for self-locking in closed position, and manual reopening, or may be equipped for self-resetting as the other three.

III OPERATION DURING THE BLAST WAVE

A. Functional Analysis

By use of the equations derived in the appendices, the closing time of the valves, the leakage pressure, and the rate of pressure rise inside the shelter were calculated. The procedures for calculation are described in this section for each individual candidate. The numerical results of the calculations will be listed in Table II.

Table II

COMPARATIVE CALCULATED RESULTS OF THE FOUR CANDIDATE VALVES

	Overpressure (psig)	Chevron Valve	BuShips Valve	Flat-Plate Valve	Swing Valve
Closing Time t_c (msec)	100	0.4	6.0*	1.5	1.6
	80	0.4	6.8	1.7	1.8
	60	0.5	8.0	1.9	2.1
	40	0.6	9.6	2.3	2.6
Maximum Pressure Rise in the Shelter $P_{2g}\|_{t=t_c}$ (psig)	100	10^{-2}**	10^{-1}	10^{-1}	10^{-1}
	80	10^{-2}	10^{-1}	10^{-2}	10^{-2}
	60	10^{-2}	10^{-1}	10^{-2}	10^{-2}
	40	10^{-2}	10^{-1}	10^{-2}	10^{-2}
Maximum Rate of Pressure Rise in the Shelter $\frac{dP_{2a}}{dt}\Big\|_{max}$ $(\frac{psi}{msec})$	100	10^{-1}	10^{-1}	10^{-1}	10^{-1}
	80	10^{-1}	10^{-1}	10^{-1}	10^{-1}
	60	10^{-1}	10^{-1}	10^{-1}	10^{-1}
	40	10^{-2}	10^{-2}	10^{-2}	10^{-2}

*As pointed out in Sec. III-A-2, the calculated closing time of the BuShips valve is about 1/4 of the experimentally measured closing time; therefore the BuShips valve closing times listed in Table II have all been multiplied by a factor of 4.

**Note: The calculated pressure rise and rate of pressure rise are given in Table II only in the order of magnitude. This is because the first bracket term in Eq. (D-9) is so small in the present problem that it requires a high-accuracy trigonometric table in order to get reasonably accurate results. It would appear that, in any event, greater effort to obtain more accurate values is neither necessory nor worthwhile.

1. Chevron Valve

Equation (B-14) of Appendix B is used to calculate the closing time for Chevron valves:

$$t_c = \left(\frac{2L}{\pi}\right)^2 \sqrt{\frac{\rho}{EI}} \cos^{-1}\left[1 - \frac{\delta EI}{\frac{4w}{\pi}\left(\frac{2L}{\pi}\right)^4}\right] .$$

The parameters needed in Eq. (B-14) for calculating the closing time of the specific Chevron valve chosen from the previous ventilating analysis are as follows:

a = Length of the valve opening = 6.0 in (see Fig. 10)

b = Width of the valve opening = 1.84 in

2L = Span of the valve plate = 7.2 in

b_p = 1.2b = Width of the valve plate

h = Thickness of the valve plate = 0.01 in

ρ = Mass per unit length of the valve plate
= (steel density) $\times$ b_p $\times$ h = 1.60×10^{-5} $\frac{\text{lb-sec}^2}{\text{in}^2}$

E = Modulus of elasticity of steel = 30×10^6 psi

I = Moment of inertia of the valve plate
= $\frac{1}{12} \times b_p \times h^3 = 0.183 \times 10^{-6}$ in^4

δ = Maximum clearance between valve plate and seat (Fig. B-1)
= $\frac{\theta_{max}}{\pi}$ L = 1.2 in [see Eq. (3)]

w = Load per unit length of the valve plate
= $P_{lg} \times (b_p) = 2.2\ P_{lg}\ \frac{\text{lbs}}{\text{in}}$.

The calculated closing times based on these parameters are listed in Table II.

With the closing times for different values of overpressure, the pressure rise in the shelter and the rate of pressure rise can be calculated by Eqs. (D-9) and (D-10), respectively:

$$P_{2a}\Big|_{t=t_c} = P_{1g} \sin\left[\frac{\frac{2}{3} C_D A_o \sqrt{gRT}\, t_c}{V} + \sin^{-1}\frac{(P_2)_o}{P_{1a}}\right]$$

$$\frac{(dP_{2a})_{max}}{dt} = P_{1a} \frac{C_D A_o \sqrt{gRT}}{V} \cos\left[\sin^{-1}\frac{(P_2)_o}{P_{1a}}\right] .$$

The parameters used in these two equations are as follows:

A_o = Initial total opening area of the valves = 600 in^2

g = Gravitational constant = 386 in/sec^2

R = Gas constant for air = $53.3 \times 12 \frac{in\text{-}lb}{lb\ ^\circ R}$

T = Temperature of the air = 530 $^\circ R$

V = Volume of the shelter = $5000 \times (12)^3\ in^3$

$(P_2)_o$ = Atmospheric pressure = 14.7 psia

C_D = 1.0.

2. <u>BuShips Valve</u>

A purely theoretical derivation of an equation for the BuShips valve closing time is extremely difficult. This is due to the fact that during the process of closing, the flexible vane plate and the valve seat achieve progressive contact. Theoretically, this means a problem with a changing boundary condition. Therefore, instead of trying to

derive a closing-time equation for the BuShips valve independently, Eq. (B-14) is applied to a configuration shown in Fig. 7 (L, ρ, b_p, and h are shown in the figure). It should be noted that some energy would be absorbed by the valve seat as the valve plate comes in more and more contact with the seat, and also that additional energy would be absorbed by the internal shearing stresses due to large deflection of the plate. These energies are not included in Eq. (B-14). Furthermore, as the BuShips valve closes, the vanes become stiffer and stiffer. The effect of this increasing stiffness is also not taken into account in Eq. (B-14). Hence we would intuitively expect the calculated closing time to be quite a bit smaller than the actual closing time. A comparison between the calculated closing time and the experimental data taken from Ref. 8 (Fig. 11) shows that the former is about 1/4 the average of the latter. An attempt was made to take into account the increasing stiffness of the closing vane by breaking up the closing process into several steps and applying Eq. (B-14) to each individual step. The result of this multiple-step calculation (not shown in Fig. 11) did in fact increase the calculated closing time to half the experimental average. However, the results were still on the non-conservative side (i.e., to the left of the experimental data in Fig. 11), which makes the additional complication of the numerical calculation hardly worthwhile. Therefore, it was decided that we should still use the one-step calculation, but quadruple the calculated BuShips valve closing time. It can be seen from Eq. (B-14) that this factor 4 will remain the same for all proportional size changes. It should also be made clear that the inordinate scatter of the experimental data as indicated in Fig. 11 for the top, middle, and bottom vanes (see Appendix G) of the referenced BuShips valve could have its origin in the close proximity of the valve to the source of blast release, and to the influence of the rapid and progressive increase in cross-sectional area of the section of duct connecting the valve with the blast source. Also the difference in attitute of the top, middle, and bottom vanes in relation to the blast front and the probability that the front is distorted could have had considerable influence.

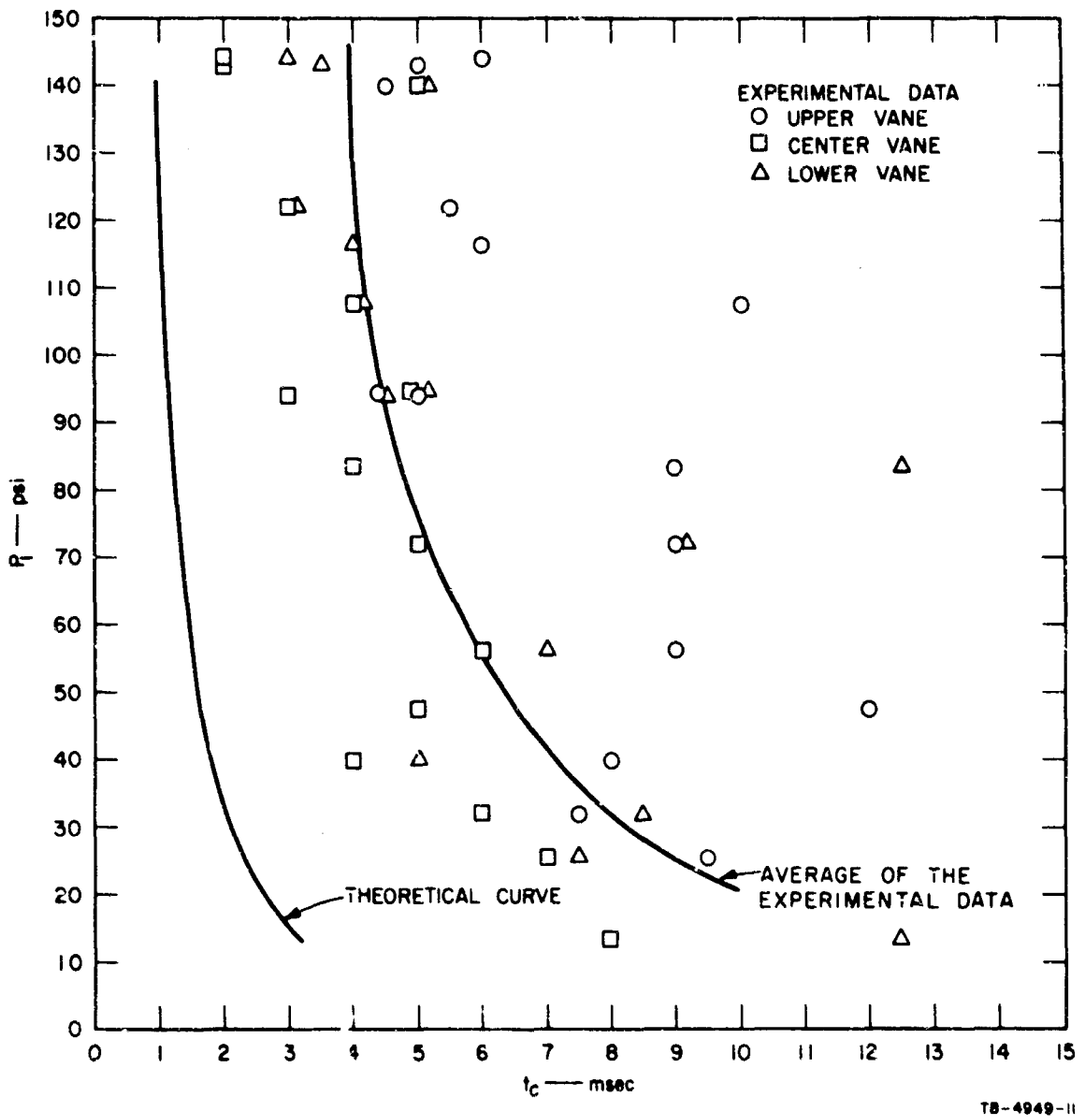

FIG. 11 BuSHIPS-VALVE CLOSING TIME — COMPARISON BETWEEN THEORY AND EXPERIMENTAL DATA

The parameters needed for calculating closing time of BuShips valve are as follows:

L = Half span of the valve plate = 6.6 in

b_p = Width of the valve plate = 13.6 in

h = Thickness of the valve plate = 0.05 in

ρ = Mass per unit length of the valve plate (steel) = $4.9 \times 10^{-4} \frac{\text{lb-sec}^2}{\text{in}^2}$

E = Modulus of elasticity of steel = 30×10^6 psi

I = Moment of inertia of the valve plate $= \frac{1}{12} b_p h^3 = 1.41 \times 10^{-4} \text{ in}^4$

δ = 4.0 inch

w = Load per unit length of the valve plate $= P_{lg} \times b_p = 13.6 \, P_{lg} \frac{\text{lbs}}{\text{in}^2}$.

The calculated results are given in Table II.

The pressure rise in the shelter and the rate of pressure rise are calculated by means of Eqs. (D-9) and (D-10). The parameters used are the same as those for the Chevron valve.

3. Flat-Plate Valve

Equation (A-7) of Appendix A can be used directly to calculate the flat-plate valve closing time:

$$t_c = \sqrt{\frac{m}{k}} \cos^{-1}\left(1 - \frac{k\delta}{P_o}\right) \quad .$$

The parameters are as follows:

m = Mass of the valve plate, (Aluminum) = $0.556 \times 10^{-2} \frac{\text{lb-sec}^2}{\text{in}}$ (see Fig. 8)

k = Spring constant = $2.14 \frac{\text{lbs}}{\text{in}}$

δ = Elevation of valve plate above the seat = 3.5 in

P_o = Blast force on the valve plate = $\frac{\pi}{4} D^2 P_{lg} = 176.8 \, P_{lg}$ lbs.

Calculated results are given in Table II. Pressure-rise calculations are exactly the same as before except using different closing time.

4. Swing Valve

Equation (C-7) of Appendix C is used to calculate the swing-valve closing time:

$$t_c = \sqrt{\frac{5}{\pi} \frac{m\theta_{max}}{PD}} \quad .$$

The parameters are as follows:

m = Mass of the valve plate (Aluminum) = $0.556 \times 10^{-2} \frac{\text{lb-sec}^2}{\text{in}}$ (see Fig. 6)

θ_{max} = Maximum opening angle = 26°

D = 15 in

$P = P_{1g}$.

Again, the results are listed in Table II.

The closing-time-vs.-overpressure curves for all four valves are plotted in Fig. 12.

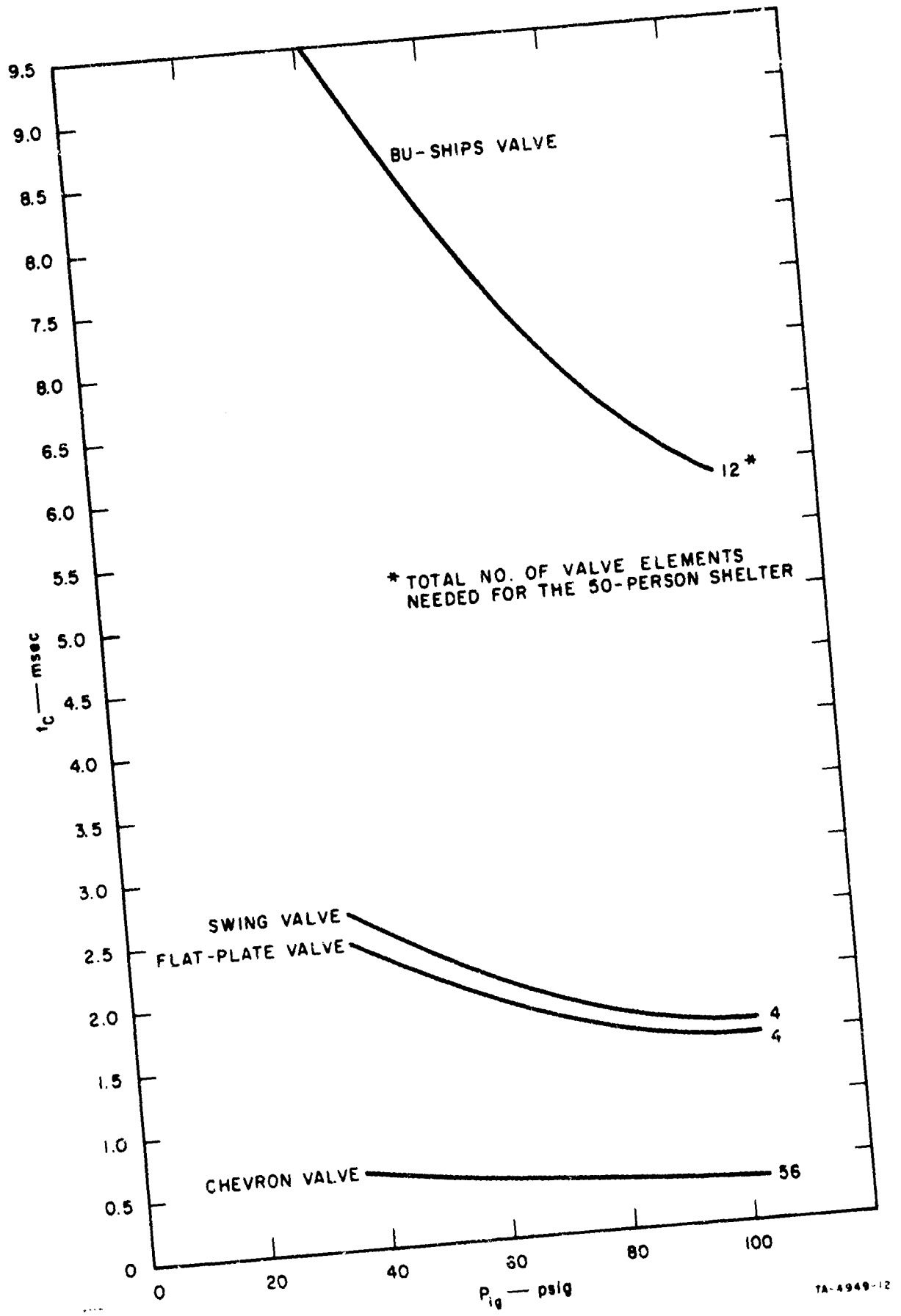

FIG. 12 OVERPRESSURES vs. CLOSING TIMES OF THE FOUR CANDIDATE VALVES

IV PREPARATIONS FOR FUTURE EXPERIMENTS

So far in this report we have compared and evaluated the different candidate blast-closure valves for domestic shelters, based on purely theoretical investigations. However, as in almost all theoretical analyses, a certain idealized mathematical model is used that more or less deviates from the true situation. In the present case, for example, frictional forces were neglected, heat transfer was deliberately ignored, the rebound problem was not considered, and many other assumptions were made. Therefore, the calculated closing times, etc., even though they serve the purpose of comparison, nevertheless depart from the experimental data (see Fig. 11). Therefore, the values derived from the theoretical calculation can only be used approximately for the actual design of the valve. Other, more complicated problems such as the pressure rise immediately downstream of the valve are simply unsolved. All of this points to the necessity for seeking experimental solutions to these problems. This section is therefore devoted to discussing some scaling problems for reference in future experimental work.

Of course, the best way to test a blast-closure-valve design is to subject it to a true nuclear explosion test. However, such a test is not usually practicable, and is especially impracticable if a series of tests are needed for a single valve design. Therefore, either a shock tube or other suitable facilities are likely to be used to simulate the blast shock waves created by nuclear explosions. Since access to test facilities large enough to accommodate a full-size model may be limited, it may be necessary to use a model scaled down to fit other and more available facilities. A similitude problem thus immediately arises.

Let us now pose this scaling problem in the following fashion. A reduced-scale blast-closure valve model is built that will fit dimensionally into the available shock-tube facilities. From the results of the shock-tube tests, how can one predict the maximum failing load (i.e., the maximum overpressure), the closing time of the valve, and the pressure rise downstream of the valve of the full-scale prototype?

The usual method of solving a scaling problem is to carry out a dimensional analysis. First, we list in Table III all the possible parameters that will affect the closing time, the failure of the valve plate, and the downstream pressure rise. We shall have in mind the Chevron valve, with the model geometrically similar to the prototype.

Table III

PARAMETERS OF DIMENSIONAL ANALYSIS

Symbols	Parameters	Units	Dimensions
t_c	Closing time	sec	T
L	Characteristic length	in	L
E	Modulus of elasticity	psi	$\frac{F}{L^2}$
ρ_v	Mass density	$\frac{lb\text{-}sec^2}{in^4}$	$\frac{FT^2}{L^4}$
P_{1g}	Overpressure	$\frac{lb}{in^2}$	$\frac{F}{L^2}$
σ_w	Working stress of the plate material	$\frac{lb}{in^2}$	$\frac{F}{L^2}$
ν	Poisson's ratio	--	--
$(P_2)_o$	Initial downstream pressure	$\frac{lb}{in^2}$	$\frac{F}{L^2}$
P_{2d}	Downstream pressure rise	$\frac{lb}{in^2}$	$\frac{F}{L^2}$

There is a total of nine parameters and three dimensional quantities (F, L, and T). Hence the well known Buckingham π-theorem tells us that six independent dimensionless parameters, sometimes called the π terms, can be formed. Taking at least one new parameter from the list each time a new π term is formed, so as to assure independence, the following six π terms are formed:

$$\pi_1 = \nu$$

$$\pi_2 = \frac{P_{1g}}{\sigma_w}$$

$$\pi_3 = \frac{P_{1g}}{\rho} \frac{t_c^2}{L^2}$$

$$\pi_4 = \frac{P_{1g}}{E}$$

$$\pi_5 = \frac{P_{1g}}{(P_2)_o}$$

$$\pi_6 = \frac{P_{1g}}{P_{2d}} \quad .$$

To assure a true model, any five of the above π terms must be equal for both the model and the prototype--that is, $(\pi_1)_m = (\pi_1)_p$,* $(\pi_2)_m = (\pi_2)_p$, etc. The equality of the sixth pair is automatically satisfied.

Let us choose to use the same kind of material--say, steel--for the valve plates of both the model and the prototype. (This choice is preliminary and may have to be changed to satisfy the π terms.) This choice immediately implies $\nu_m = \nu_p$, $E_m = E_p$, $\rho_m = \rho_p$, and $(\sigma_w)_m = (\sigma_w)_p$. Now denote the dimensional reducing factor L_m/L_p by λ; then it is easy to see that

$$(\pi_2)_m = (\pi_2)_p \text{ or } (\pi_4)_m = (\pi_4)_p \text{ implies } (P_{1g})_m = (P_{1g})_p$$

$$(\pi_3)_m = (\pi_3)_p \text{ implies } \frac{(t_c)_m}{(t_c)_p} = \lambda$$

$$(\pi_5)_m = (\pi_5)_p \text{ implies } [(P_2)_o]_m = [(P_2)_o]_p$$

$$(\pi_6)_m = (\pi_6)_p \text{ implies } (P_{2d})_m = (P_{2d})_p \quad .$$

*Where the subscripts m and p refer to model and prototype, respectively.

In physical terms the above dimensional analysis means that if the model and the prototype are geometrically similar, and made of the same material, then the overpressure P_{1g} and the initial downstream pressure $(P_2)_o$ of the shock-tube simulation should be made the same as in the true situation. Under these conditions the closing time $(t_c)_p$ of the prototype can be calculated by multiplying the experimentally measured model valve closing time $(t_c)_m$ by $1/\lambda$. The downstream pressure rise, $(P_{2d})_p$, of the prototype is the same as the experimentally measured $(P_{2d})_m$.

The above conclusion regarding t_c can also be dictated by direct analysis from Eq. (B-14).

V DISCUSSION

A. Physiological Data

Conclusion No. 1 in Sec. VI requires a careful weighing of the degree of confidence that can be placed in the physiological data itself, bearing in mind that all values relating to man quoted in the references are extrapolated from results obtained using four species of mammal smaller than man.

The authors specifically state that "one should approach the extrapolation to any given species including man, with considerable caution" (Ref. 3, page 1007). Also on page 1008, that "Therefore the extrapolation indicating that a 400 msec single sharp rising overpressure of 50.5 psi applies to as large an animal as man might be considered a tentative figure."

B. Blast Through Open Ports

Even if, on the basis of physiological data (Refs. 3 and 4), unrestricted ventilation ports are judged acceptable in specific instances where internal distribution of blast winds appear to present no difficulty, it would seem necessary to provide means for excluding flying (perhaps burning) debris carried by the blast, and also some means for deflection and partial attenuation of the blast wind along ceilings to prevent its direct impingement on personnel, etc.

Implementation of this approach could present a problem at the inlet port, which presumably would be directly coupled to ducting and a blower, etc.

The problem might be overcome, however, by providing a very lightweight, easily replaceable relief diaphragm, capable of rupturing above a given overpressure and so permitting deflection of the blast wind away from the ventilating fan.

Such precautions would appear advisable even where a blast closure is deemed necessary.

It should be realized that the pulse (or bubble) of blast wind resulting from bypass leakage during valve closure could attain a peak force of about 10 psi at the downwind exit of the valve (see Ref. 8).

It would be important that direct impingement of this pressure pulse on personnel be avoided even though the effect could not persist beyond the time required for valve closure. Also, it would appear that all ventilation ports, with or without blast closures, should be protected against penetration by gross fragments of flying debris.

C. Negative Pressure

Information derived from Ref. 2 make it appear that within the possible range of 20 to 100 psig the negative pressure phase is virtually independent of the peak positive overpressure and that pressure falls slowly from zero overpressure to about 3.5 psi below, and then regains ambient pressure, the whole negative excursion extending over about 8 seconds. This would subject the shelter occupants to a relatively gentle experience. In view of this, it would be difficult to justify present consideration of means of closure against reverse flow, since even the simplest arrangement would add some additional cost per unit with small apparent return.

VI CONCLUSIONS

1. The pressure rise has been computed in an underground personnel shelter located in the 100-psi overpressure region of a nuclear blast. This pressure rise has been compared with available physiological data on human tolerance to pressure and rate of change of pressure (see Appendices E and F). The maximum pressure rise in the circumstances would not exceed, either in amount or rate, a level that would be overly hazardous to man, even if both valves remained full open or if neither the inlet nor outlet was provided with a blast valve.

However, the validity of this conclusion is subject to considerations set forth in Sec. V.

2. The other important conclusion that can be reasonably drawn from studies and analyses carried out during the current project is that the development and fabrication of a blast-operated valve of simple design and capable of adequately attenuating nuclear blast pressures of 100 psig appears quite practicable. Also that:

(1) Valve closure may be achieved in less than 10 milliseconds.

(2) Bypass leakage during closure should not cause an average pressure rise of more than 10^{-1} psig in a typical rectangular <u>undivided</u> shelter space for 50 occupants, having a volume of 5000 cubic feet.

(3) It was found that for a 50-person shelter with an assumed tolerable limit of 5 psig pressure rise within the shelter, the longest required closing times for 100, 80, 60, and 40 psig ambient overpressures are 60, 75, 110, and 140 milliseconds, respectively.

Since analysis indicates that all four of the investigated candidate valves should close at rates much faster than the above, the choice among valves will be determined only on the basis of reliability and cost.

VII RECOMMENDATIONS FOR FURTHER STUDIES

Conclusions given in Sec. VI prompt us to recommend a further program of research and development, implementing the work performed under the present sub-task authorization.

In the light of the somewhat cautious advancement of physiological data extrapolations in Appendix F, and also of discussions in Sec. V, it is felt that additional studies should be made to determine if further physiological data have been obtained since 1961 that might indicate either a need for further research and experiment on blast closures, or make it unnecessary.

If, on the one hand, such studies confirm the tentative findings set forth in Appendix F, and that blast closures do not appear necessary to protect shelter inhabitants from pressure, they may still be useful to protect them from flying debris.

On the other hand, future physiological studies might indicate that findings referenced in Table 18, Ref. 4 are overly optimistic, and thus at least elementary blast closures may indeed be necessary. If, however, as anticipated, the 5-psi value for threshold of damage to human eardrums found in Table 24, Ref. 4, can be accepted, it is recommended that a continuing program of research and experimental development should follow, implementing the above work and also that performed under the present sub-task authorization.*

---

*This program would concern itself first with reduced-scale experiment to determine the validity of the analyses performed as part of the present task and also the validity of the assumptions and approximations inevitably associated with an application where there is little background of experience to draw upon. Some of this background, useful though it is in providing basic information and values not available through other sources, concerns itself with the military requirement, and does not readily apply without a certain amount of "fitting," to the still important (if less rigid) needs of public shelters.

In considering experimental hardware, which would logically follow this study, close attention must be given to the matter of scaling in order to achieve a reasonably valid simulation of full-scale closures based on analytical work performed during the present effort.

In preparation for the work recommended above, analyses have been made in Sec. IV of this report in order to establish the conditions of similitude in advance.

It is recommended that the initial experimental effort be confined strictly to simulation testing of essential functions specific to each of the candidate closures.

No attempt would be made at that time to construct and test prototype units of any of the candidate closures.

Analyses of experimental results obtained from such functional hardware would permit a choice on the basis of performance.

Following these preliminary tests an attempt would be made to generate an engineering estimate of overall cost efficiency for the several candidate closures, as complete full-size operable units, taking into consideration the factors presented in Sec. V-A of this report. For example, a decision could then be made to build and test either a full- or reduced-scale model of one (or more) of the more promising candidate closures (depending on the capacity of shock-tube testing facilities available at that time).

Not included in the above recommendation, but considered to be matters for serious future consideration in view of the effect of the "by-pass" blast bubble during valve closure, are the following:

(1) Provision for a fallout and/or dust filter to be placed directly downstream of the closure and capable of withstanding approximately 10 psi overpressure for 2.5 msec without collapse.

(2) The effect of leakage overpressure on a ventilating fan mounted either immediately downstream of the closure or beyond a filter.

(3) Effect of by-pass leakage, in particular the high temperature associated with the leakage air, on polyethylene ducting if coupling directly to downstream opening of the closure.

APPENDIX A

CLOSING TIME OF A SIMPLE MASS-SPRING SYSTEM

APPENDIX A

CLOSING TIME OF A SIMPLE MASS-SPRING SYSTEM

The problem here relates to a simple mass-spring system originally at equilibrium (Fig. A-1). At time zero, a constant load $f > K\delta$ is suddenly applied to and remains impressed on the mass for a finite period of time. The problem is that of determining the time required for the mass to reach a distance δ under this load.

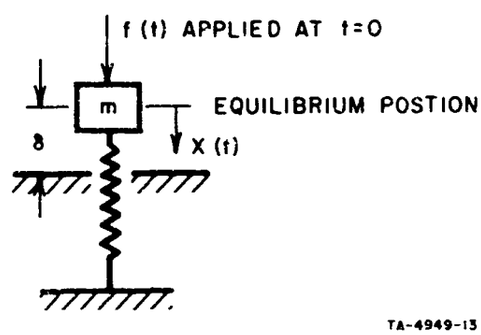

FIG. A-1 SIMPLE MASS-SPRING SYSTEM

The solution to this problem will be directly applicable to flat-plate valves. In addition, it provides some insight into the more complicated Chevron valve closing-time analysis discussed in Appendix B.

The present problem, shown in Fig. A-1, is a force vibration problem; therefore the governing equation is*

$$m\ddot{x} + kx = f(t) \qquad \text{(A-1)}$$

---

*The damping force is neglected.

where f(t) is a constant external force applied at t = 0, hence it can be written explicitly as

$$f(t) = P_o \cdot H(t) \tag{A-2}$$

where P_o is a constant and H(t) is the Heaviside step function.

The initial conditions are:

$$x(0-) = 0 \tag{A-3}$$

$$\dot{x}(0-) = 0 \quad . \tag{A-4}$$

The problem is thus well formulated, and an analytic solution can be obtained. The solution (see Ref. 10) is

$$x(t) = \frac{P_o}{k} \left(1 - \cos \sqrt{\frac{k}{m}}\, t\right) \quad . \tag{A-5}$$

Denote the time when $x(t) = \delta$ by t_c; it follows from Eq. (A-5) that

$$\delta = \frac{P_o}{k} \left(1 - \cos \sqrt{\frac{k}{m}}\, t_c\right) \quad . \tag{A-6}$$

Solve for t_c explicitly; then

$$t_c = \sqrt{\frac{m}{k}} \cos^{-1}\left(1 - \frac{k\delta}{P_o}\right) \quad . \tag{A-7}$$

Equation (A-7) can alternatively be written in terms of dimensionless variables $t_c{}^* = t_c \sqrt{(P_o/m\delta)}$, and $x^* = (k\delta/P_o)$:

$$t_c{}^* = \frac{1}{\sqrt{x^*}} \cos^{-1} (1 - x^*) \quad . \tag{A-8}$$

A few limiting cases can be observed immediately from Eq. (A-7). In the limit as $P_o \to \infty$, then $(k\delta/P_o) = 0$, and Eq. (A-7) gives $t_c = 0$, which is congruent with our intuition. Also, in the limit as $m \to \infty$, we would expect it to take an infinitely long time to reach $x = \delta$ for a finite loading, and indeed Eq. (A-7) dictates $t_c = \infty$ as an answer.

APPENDIX B

CHEVRON-VALVE CLOSING TIME

APPENDIX B

CHEVRON-VALVE CLOSING TIME

A chevron-valve closing-time analysis was performed in Ref. 2. However, in that analysis only the inertia of the valve plate was taken into account; the stiffness of the valve plate, which intuitively may be expected to greatly influence the closing time, was neglected completely. In this appendix, the problem will be resolved and the stiffness of the valve plate will be taken into account. However, the frictional forces of the two ends sliding on the valve seat are neglected.* The problem to be solved is very similar to that in Appendix A. In this case the mass is distributed, and the spring is represented by the stiffness of the valve plate. The loading is a uniform pressure applied instantaneously at time zero (Fig. B-1).

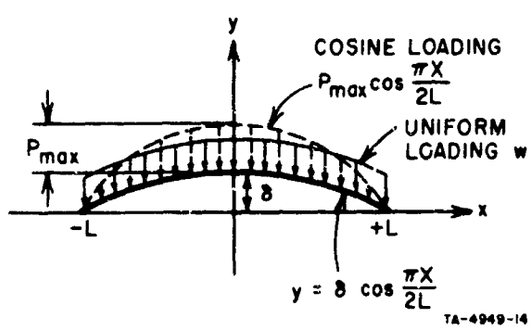

FIG. B-1 CHEVRON-VALVE LOADING

---

*We have calculated three different closing times for an identical Chevron valve element. When inertia force alone is taken into account, t_c = 0.185 msec; when inertia and frictional forces (friction coefficient taken to be 0.5) are taken into account, t_c = 0.191 msec; when inertia and bending forces are taken into account, t_c = 0.372 msec. The first two t_c's are calculated by means of equations derived in Ref. 2, and the third one is calculated by means of Eq. (B-14). It is thus seen that the neglecting of the frictional force does not seriously invalidate the result.

As before, set down first are the governing differential equation, boundary conditions, and initial conditions in their exact form. Then, as an analytic solution is sought, certain approximations will be made.

It may be easily recognized that this Chevron-valve problem is one involving a forced vibrational beam. The governing equation is therefore:

$$EI \frac{\partial^4 \bar{y}}{\partial \bar{x}^4} + \rho \frac{\partial^2 \bar{y}}{\partial t^2} = f(\bar{x},t) \qquad \text{(B-1)}$$

where $\bar{x}$ and $\bar{y}$ $(\bar{x},t)$ are used to distinguish these quantities from the x,y coordinates to be used later. Attention is called to two features of Eq. (B-1). First, in using this simple beam equation, we are essentially neglecting the shearing effect of the beam due to large deflection. To be more specific, any further refinement of this problem will have to use the Timoshenko beam equation, which is more appropriate for beam problems with large deflections. Second, Eq. (B-1) is derived from the condition that the beam is a flat plate at its neutral, or equilibrium, position. In the present case, however, the beam is in a shape of $\bar{y} = \delta \cos \frac{\pi \bar{x}}{2L}$ when it is in neutral position--i.e., when it is at rest prior to the application of the uniform loading. Hence, a transformation must be carried out before the beam equation can be directly applied.

Necessary transformation in order to shift the neutral position is merely a coordinate transformation--that is,

$$\bar{x} = x$$

$$\bar{y}\ (\bar{x},t) = y(x,t) - \delta \cos \frac{\pi x}{2L} \quad .$$

With this transformation pair, Eq. (B-1) becomes

$$\frac{\partial^4 y}{\partial x^4} + \frac{\rho}{EI} \frac{\partial^2 y}{\partial t^2} = \frac{f(x,t)}{EI} + \delta \left(\frac{\pi}{2L}\right)^4 \cos \frac{\pi x}{2L} \quad . \qquad \text{(B-2)}$$

As in Appendix A, the external loading $f(x,t)$ can be written as $-w\,H(t)$ where w is a constant force per unit length of the beam and $H(t)$ is again the Heaviside step function.

The boundary conditions are merely the statements that the displacements and bending moments at $x = L$ and $x = -L$ are zero--that is,

$$y(\pm L,t) = 0 \tag{B-3}$$

$$y_{xx}(\pm L,t) = 0 \tag{B-4}$$

where subscripts are used to denote partial differentiations as in the usual convention. The initial conditions are,

$$y(x,o) = \delta \cos \frac{\pi x}{2L} \tag{B-5}$$

$$y_t(x,o-) = 0 \quad . \tag{B-6}$$

The problem is now well formulated. The uniform load, w, however, presents a difficulty when a closed-form analytic solution is sought.

A closer examination of the loading in Fig. (B-1) reveals that the loading w near the ends--i.e., $x = \pm L$--does not contribute very much to the closing the valve. Therefore, we propose to substitute a cosine loading for the uniform loading (Fig. B-1). The maximum of the cosine loading P_{max} is determined by equating the work done by the uniform loading during the process of closing to the work done by the cosine loading. This "equal work" proposal should give reasonable results.

The work done by the uniform loading W is $\int_{-L}^{L} w \cdot y \cdot dx$, and the work done by the cosine loading is $\int_{-L}^{L} P_{max} \cos(\pi x/2L) \cdot y \cdot dx$. When the two are equated and then integrations carried out, the results lead to

$$P_{max} = \frac{4}{\pi} w \tag{B-7}$$

with $f(x,t) = - w\, H(t)$ substituted by $-P_{max} \cos(\pi x/2L)\, H(t)$. Equation (B-1) then becomes

$$\frac{\partial^4 y}{\partial x^4} + \frac{\rho}{EI}\frac{\partial^2 y}{\partial t^2} = -\frac{P_{max}}{EI}\cos\frac{\pi x}{2L}\, H(t) + \delta\left(\frac{\pi}{2L}\right)^4 \cos\frac{\pi x}{2L} \quad . \qquad \text{(B-8)}$$

Now, Eq. (B-8) with boundary conditions, Eqs. (B-3) and (B-4), and initial conditions, Eqs. (B-5) and (B-6), can be solved by assuming a solution of the form

$$y(x,t) = A \cos\frac{\pi x}{2L}\, T(t) \qquad \text{(B-9)}$$

where A, a constant, and T(t), a function of time, are to be determined later. Equation (B-9) obviously satisfies all the boundary conditions. Putting this assumed solution into Eq. (B-8), the partial differential equation turns into an ordinary differential equation of one single variable, t:

$$T''(t) + \left(\frac{\pi}{2L}\right)^4 \frac{EI}{\rho}\, T(t) = -\frac{P_{max}}{\rho A}\, H(t) + \delta\left(\frac{\pi}{2L}\right)^4 \frac{EI}{\rho} \quad . \qquad \text{(B-10)}$$

Equation (B-10) is of the same form as Eq. (A-1) except for the additional term, a constant. Therefore, the solution of Eq. (B-10) can be written down immediately [cf. Eq. (A-5)]:

$$T(t) = -\frac{P_{max}}{\omega_1^2 \rho A}\,(1 - \cos\omega_1 t) + \delta \qquad \text{(B-11)}$$

where $\omega_1^2 = (\pi/2L)^4\,(EI/\rho)$ is the first natural frequency of the beam.*

---

*See, for instance, Ref. 11.

Substitute T(t) in Eq. (B-9) by Eq. (B-11); then

$$y(x,t) = -\frac{P_{max}}{\omega_1^2 \rho}(1 - \cos \omega_1 t) \cos \frac{\pi x}{2L} + A\,\delta \cos \frac{\pi x}{2L} \quad . \qquad \text{(B-12)}$$

It is easily seen that Eq. (B-12) satisfies the initial condition, Eq. (B-6). The other initial condition, Eq. (B-5), requires A = 1. The complete solution that satisfies Eqs. (B-2) to (B-6) is then

$$y(x,t) = -\frac{P_{max}}{\omega_1^2 \rho}(1 - \cos \omega_1 t) \cos \frac{\pi x}{2L} + \delta \cos \frac{\pi x}{2L} \quad . \qquad \text{(B-13)}$$

The closing time t_c can be obtained by setting y = 0 and $t = t_c$ in Eq. (B-13):

$$t_c = \left(\frac{2L}{\pi}\right)^2 \sqrt{\frac{\rho}{EI}} \cos^{-1}\left[1 - \frac{\delta EI}{\frac{4w}{\pi}\left(\frac{2L}{\pi}\right)^4}\right] \quad . \qquad \text{(B-14)}$$

In getting Eq. (B-14), ω_1 has been substituted by $\sqrt{\frac{EI}{\rho}}\left(\frac{\pi}{2L}\right)^2$, and P_{max} by $\frac{4w}{\pi}$ [see Eq. (B-7)].

Equation (B-14) can again be put in a dimensionless form

$$t_c{}^* = \frac{1}{\sqrt{x^*}} \cos^{-1}(1 - x^*) \qquad \text{(B-15)}$$

where

$$t_c{}^* = t_c \sqrt{\frac{\frac{4w}{\pi}}{\rho\delta}} \qquad \text{and } x^* = \frac{EI\delta}{\frac{4w}{\pi}\left(\frac{2L}{\pi}\right)^4} \quad .$$

Equation (B-15) is seen to be identical to Eq. (A-8). Therefore, the problem of Appendix A and that of Appendix B are very similar. In fact, t_c* in either case is proportional to t_c and also to the square root of loading, and inversely proportional to the square root of mass of the valve times closing distance. And x*, in either case, is proportional to stiffness times the closing distance and inversely proportional to loading. Hence, the limiting cases observed in the concluding remarks of Appendix A are equally valid for this problem.

APPENDIX C

SWING-VALVE CLOSING TIME

APPENDIX C

SWING-VALVE CLOSING TIME

In deriving the expression for swing-valve closing time, only the inertia of the valve plate will be taken into account.

The uniform pressure exerted on the circular plate will be replaced by an equivalent force F, where $F = p \times (\pi/4) \times D^2$ (Fig. C-1).

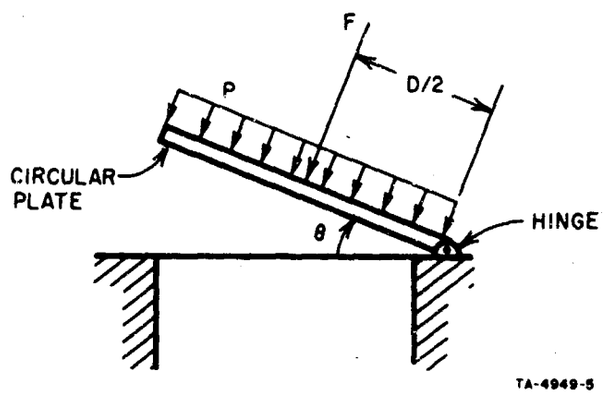

FIG. C-1 SWING-VALVE LOADING

The governing differential equation is the force-balancing equation--namely, the external torque plus the angular inertia equals zero:

$$F \times \frac{D}{2} + I\ddot{\theta} = 0 \quad . \tag{C-1}$$

The initial conditions are

$$\theta = \theta_{max} \qquad \text{at } t = 0 \tag{C-2}$$

$$\dot{\theta} = 0 \qquad \text{at } t = 0 \quad . \tag{C-3}$$

The differential equation, Eq. (C-1), can be readily integrated and the integrating constants can be determined from the initial conditions. The final result is

$$\theta(t) = -\frac{F}{I} \times \frac{D}{2} \times \frac{t^2}{2} + \theta_{max} \quad . \tag{C-4}$$

The closing time t_c corresponds to $\theta = 0$; hence

$$t_c = \sqrt{\frac{4I\ \theta_{max}}{FD}} \quad . \tag{C-5}$$

The moment of inertia I of the circular disc with respect to the hinge-axis is $5/16\ mD^2 + 1/12\ mh^2$, where m is the mass of the disc and h is the thickness of the disc. As we will be dealing with discs of $h \ll d$, the second term of the expression for I can therefore be neglected; then,

$$I = \frac{5}{16}\ mD^2 \quad . \tag{C-6}$$

Replacing F by $p \times (\pi/4) \times D^2$ and I by Eq. (C-6), we can write Eq. (C-5) as

$$t_c = \sqrt{\frac{5}{\pi}\ \frac{m\theta_{max}}{pD}} \quad . \tag{C-7}$$

APPENDIX D

PRESSURE RISE IN THE SHELTER

APPENDIX D

PRESSURE RISE IN THE SHELTER

As is done in the general analysis of the normal ventilation, the blast-closure valves are looked upon as orifices connecting two large reservoirs. However, unlike the ventilation analysis where the pressure drop across the valve is only a few inches of water so that the flow can be considered as incompressible, the pressure difference in the present analysis can be as high as 100 psi;* hence, the compressibility effect of the air must be considered. That is, the orifice equation for compressible instead of that for incompressible fluids will be used. By using the compressible-fluid orifice equation, the amount of air flowing across the valve during its closing period is calculated. This additional amount of air flowing through the valve, therefore, contributes toward raising the pressure inside the shelter.

The shock wave created by a nuclear blast is not only of high pressure, but also of high temperature. However, in this analysis we shall neglect this factor, assuming that the temperature of the blast wave is that of the atmosphere prior to the blast. Then the complicated heat transfer process between the flowing air and the shelter wall is ignored. As the density of hot air is smaller than that of cold air under the same pressure, our isothermal assumption will result in overestimating the pressure rise in the shelter. In other words, the assumption is conservative.

No single-orifice equation covers the compressible flow from very small pressure difference up to the so-called choked flow. Therefore, we have adopted a semi-empirical formula that gives the approximate mass flow rate W of compressible fluid through an orifice:[12]

$$W = \frac{C_D A}{\sqrt{gRT}} \sqrt{P_{1a}^2 - P_{2a}^2} \quad . \qquad \text{(D-1)}$$

*Again refers to reflected pressure.

Here W, A, and P_{2a} are all functions of time; the rest of the quantities are constants.

Before using Eq. (D-1) to calculate the pressure rise in the shelter, the variation of the valve opening area with respect to time--i.e., A(t) must be given. The function A(t) can be found by using the results of Appendices A, B, and C and the particular configurations of each kind of valve. However, since the closing times for all valves are small, A(t) will not differ extensively from one valve to the other. A simpler approximation will be used instead.

It will be assumed that for all the candidate valves, the decrease of the opening area during the process of closing will be due to a uniformly accelerating motion--that is,

$$\frac{d^2A(t)}{dt^2} = \text{constant} \quad . \tag{D-2}$$

Equation (D-2) can be integrated readily, and the integrating constants are determined by the auxiliary conditions:

$$A = A_o \qquad \text{at } t = 0$$

$$\frac{dA}{dt} = 0 \qquad \text{at } t = 0$$

$$A = 0 \qquad \text{at } t = t_c \quad .$$

The resulting expression for A(t) is then

$$A(t) = A_o \left(1 - \frac{t^2}{t_c^2}\right) \quad . \tag{D-3}$$

Substitute Eq. (D-3) into Eq. (D-1),

$$W(t) = \frac{C_D A_o}{\sqrt{gRT}} \left(1 - \frac{t^2}{t_c^2}\right) \sqrt{P_{1a}^2 - P_{2a}^2} \quad . \qquad \text{(D-4)}$$

Equation (D-4) gives the mass flow rate at any instant t. The differential mass of air leaked through from t = t to t = (t + dt) is (P_{2a} is considered to be constant during the time interval dt),

$$dM = W(t)\ dt = \frac{C_D A_o}{\sqrt{gRT}} \left(1 - \frac{t^2}{t_c^2}\right) \sqrt{P_{1a}^2 - P_{2a}^2}\ dt \quad . \qquad \text{(D-5)}$$

The differential pressure rise in the shelter due to the amount of leaked air dM can be calculated from the perfect gas law

$$dP_{2a} = \frac{dM}{V}\ gRT \qquad \text{(D-6)}$$

where V is the volume of the shelter.

Substituting Eq. (D-6) into Eq. (D-5), a single differential equation governing $P_{2a}(t)$ is obtained:

$$\frac{V}{\sqrt{gRT}} \frac{dP_{2a}}{\sqrt{P_{1a}^2 - P_{2a}^2}} = C_D A_o \left(1 - \frac{t^2}{t_c^2}\right) dt \quad . \qquad \text{(D-7)}$$

The solution of Eq. (D-7), subjected to the initial condition $P_{2a} = (P_2)_o$ = atm pressure at t = 0, is

$$P_{2a} = P_{1a} \sin\left[\frac{C_D A_o \sqrt{gRT}}{V}\ t_c \left(\frac{t}{t_c} - \frac{1}{3}\frac{t^3}{t_c^3}\right) + \sin^{-1}\frac{(P_2)_o}{P_{1a}}\right] \quad . \qquad \text{(D-8)}$$

Equation (D-8) gives the pressure inside the shelter as a function of time. The pressure rise at $t = t_c$ (which is the maximum pressure rise) is then

$$P_{2a}\Big|_{t = t_c} = P_{1a} \sin\left[\frac{2}{3}\,\frac{C_D A_o \sqrt{gRT}}{V}\, t_c + \sin^{-1}\frac{(P_2)_o}{P_{1a}}\right] \quad . \qquad \text{(D-9)}$$

The rate of pressure rise in the shelter for a constant P_{1a} can be obtained by differentiating Eq. (D-8) with respect to time. It can easily be shown that $(dP_{2a}/dt)\Big|_{P_{1a} = \text{const.}}$ is maximum at $t = 0$. The result will be

$$\left(\frac{dP_{2a}}{dt}\right)_{max} = \frac{P_{1a}\, C_D A_o \sqrt{gRT}}{V} \cos\left[\sin^{-1}\frac{(P_2)_o}{P_{1a}}\right] \quad . \qquad \text{(D-10)}$$

Equation (D-10) can alternatively be written as

$$\left(\frac{dP_{2a}}{dt}\right)_{max} = \frac{C_D A_o \sqrt{gRT}}{V} \sqrt{P_{1a}^2 - P_{2a}^2} \quad ,$$

which can be deduced directly from Eq. (D-7).

Two remarks can be made regarding Eq. (D-9):

(1) When $t_c = 0$--that is, when the valve closes instantly--then

$$P_{2a}\Big|_{t = t_c = o} = P_{1a} \sin\left[\sin^{-1}\frac{(P_2)_o}{P_{1a}}\right]$$

$$= (P_2)_o$$

$$= \text{atm pressure}$$

and the result shows no pressure rise in the shelter, which is as it should be.

(2) Because of the sine function, $P_{2a}|_{t = t_c}$ can at most be equal to P_{1a}.

It should be noted that the theoretical analysis of pressure rise given in this appendix assumes not only that the temperature of the leaked air is the same as the air originally in the shelter, but also that the two different sources of air mix instantaneously so that any small amount of leakage will give a corresponding uniform pressure rise in the shelter. However, the situation in reality will differ somewhat. We would expect in fact that during the valve closing period, some complicated interactions between shock waves and expansion waves would take place in the vicinity of the valve inlet, which would cause the local pressure rise to be much higher than that calculated by Eq. (D-9). For instance, Ref. 7 measured a pressure rise of 10 psig at a point six inches downstream of the tested BuShips valve for a shock overpressure of 100 psig. Because of the extreme complexity of the problem, a theoretical prediction of the pressure rise in the immediate downstream of the valve is not feasible. It is therefore felt that these data can only be obtained experimentally. (The scaling problem associated with future experiments is treated in Sec. IV.) However, the pressure rise calculated by means of Eq. (D-9), even though not completely realistic, is still useful for a comparison basis. Another point worth pondering is that even though the pressure rise immediately downstream of the valve may exceed the tolerable limit of 5 psi, it need not necessarily cause injury to the shelter occupants, expecially if the downstream "bubble" of leakage from the valve is well baffled or deflected. However, this circumstance will certainly affect the design of any filter system, expecially if the filter element is placed immediately behind the blast-closure valves.*

*If a filter system is placed in between the valve and the baffle, it will be loaded on one side as the leakage bubble pressure hits it, and then, perhpas in a fraction of a millisecond, as the leakage pressure in the form of a shock is reflected back from the baffle, the filter system will be loaded in the opposite direction. It will be clear therefore that the loading on the filter system presents a complicated problem that should be studied in depth.

APPENDIX E

PRESSURE RISE IN THE SHELTER FOR THE CASE WHEN THE VALVES STAY OPEN

APPENDIX E

PRESSURE RISE IN THE SHELTER FOR THE CASE WHEN THE VALVES STAY OPEN

In this analysis we examine the pressure rise in the shelter for the case in which the blast-closure valves accidentally stay open during the passage of the shock wave. The analysis is very similar to that of Appendix D except that the exponential decay of the overpressure has to be taken into account.

Denote the duration of the positive pressure phase of the overpressure by t_p; the decay of the overpressure from its initial maximum value $\left(P_{1a}\right)_o$ to the atmospheric pressure $\left(P_2\right)_o$ can roughly be represented by

$$\left(P_{1a}\right)_o e^{-\frac{t}{t_p} \log \frac{\left(P_{1a}\right)_o}{\left(P_2\right)_o}} .$$

In other words,

$$P_{1a}(t) = \left(P_{1a}\right)_o e^{-\frac{t}{t_p} \log \frac{\left(P_{1a}\right)_o}{\left(P_2\right)_o}} . \qquad \text{(E-1)}$$

By using the same orifice equation (D-1) and the perfect gas relation (D-6), a differential equation governing $P_{2a}(t)$ similar to Eq. (D-7) is obtained:

$$\frac{V}{\sqrt{gRT}} \, d\, P_{2a} = C_D A_o \sqrt{P_{1a}^2(t) - P_{2a}^2(t)} \, dt \quad . \qquad \text{(E-2)}$$

The only difference between Eqs. (E-2) and (D-7) is that the area is

taken to be constant in Eq. (E-2): that is, the valves are assumed to stay full open.

Substituting (E-1) into (E-2) and non-dimensionalizing all the terms, we have

$$\left(\frac{1}{t_p}\cdot\frac{V}{C_D A_o \sqrt{gRT}}\right)\frac{d\left[\dfrac{P_{2a}}{\left(P_{1a}\right)_o}\right]}{d\left[\dfrac{t}{t_p}\right]} = \sqrt{e^{2\frac{t}{t_p}\log\frac{\left(P_2\right)_o}{\left(P_{1a}\right)_o}} - \left[\frac{P_{2a}}{\left(P_{1a}\right)_o}\right]^2} \qquad \text{(E-3)}$$

or

$$K\frac{d\,P^*_{2a}}{d\,t^*} = \sqrt{e^{2t^*\log\left(P_2\right)^*_o} - P^{*\,2}_{2a}} \quad . \qquad \text{(E-4)}$$

With the initial condition $P^*_{2a} = \left[\left(P_2\right)_o / \left(P_{1a}\right)_o\right]$ at $t^* = 0$, the differential equation (E-4) is solved by using an analog computer. Four sets of results corresponding to $\left(P_{1a}\right)_o$ = 114.7, 94.7, 74.7, and 54.7 psia are given in Figs. E-1 through E-4. The other parameters used in obtaining the results in Figs. E-1 through E-4 are:

$$t_p = 1 \text{ sec}$$

$$V = 5000 \times (12)^3 \text{ in}^3$$

$$C_D = 1$$

$$A_o = 600 \text{ in}^2$$

$$T = 530^\circ R$$

$$\left(P_2\right)_o = 14.7 \text{ psia.}$$

One remark has to be made on t_p. This positive pressure duration time would be different for different values of $\left(P_{1a}\right)_o$. For $\left(P_{1a}\right)_o$ = 114.7, 94.7, 74.7, and 54.7 psia, t_p's calculated from Ref. 2

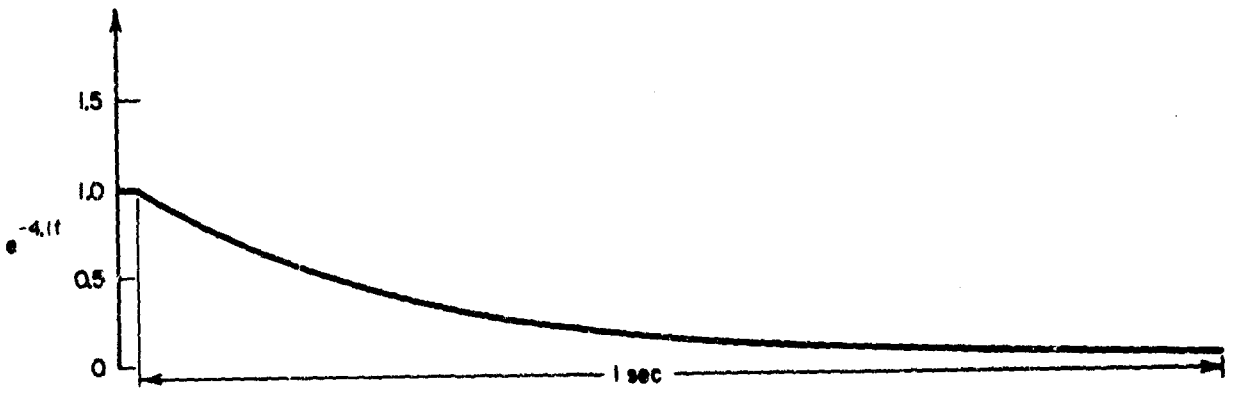

(a) TIME DECAY

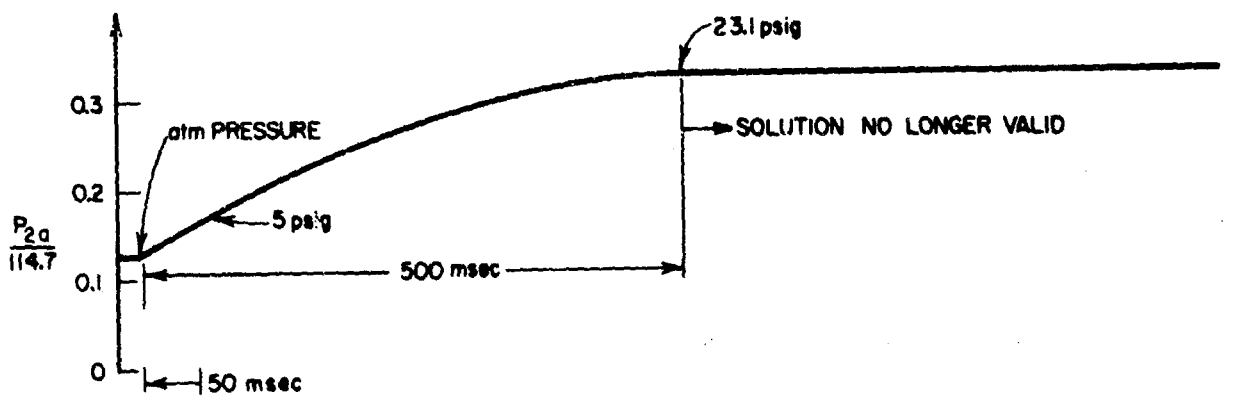

(b) PRESSURE RISE IN THE SHELTER

(c) RATE OF PRESSURE RISE

TB-4949-16

FIG. E-1 PRESSURE-RISE CURVES FOR 100 psig OVERPRESSURE

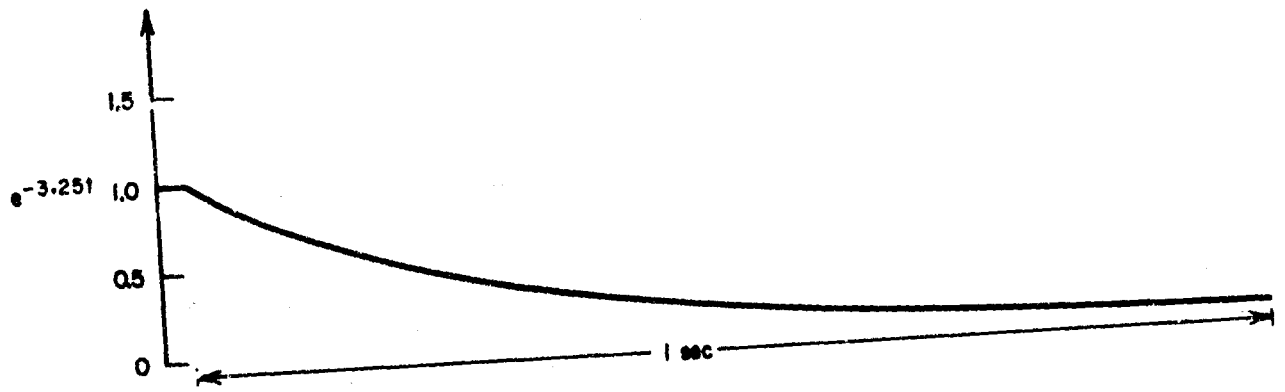

(a) TIME DECAY

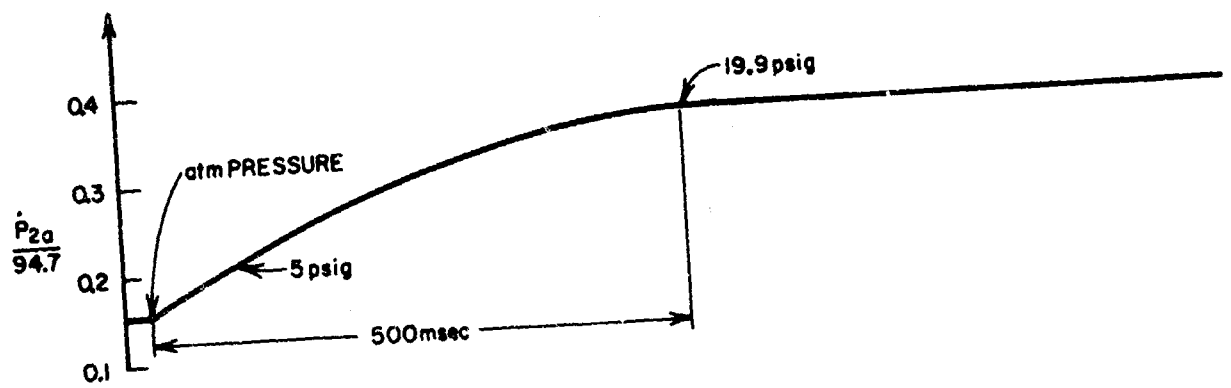

(b) PRESSURE RISE IN THE SHELTER

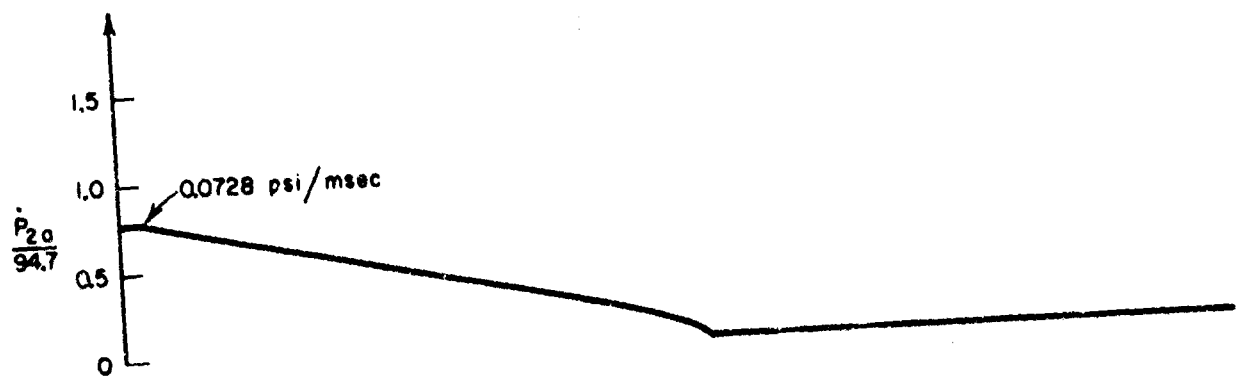

(c) RATE OF PRESSURE RISE

TB-4949-17

FIG. E-2 PRESSURE-RISE CURVES FOR 80 psig OVERPRESSURE

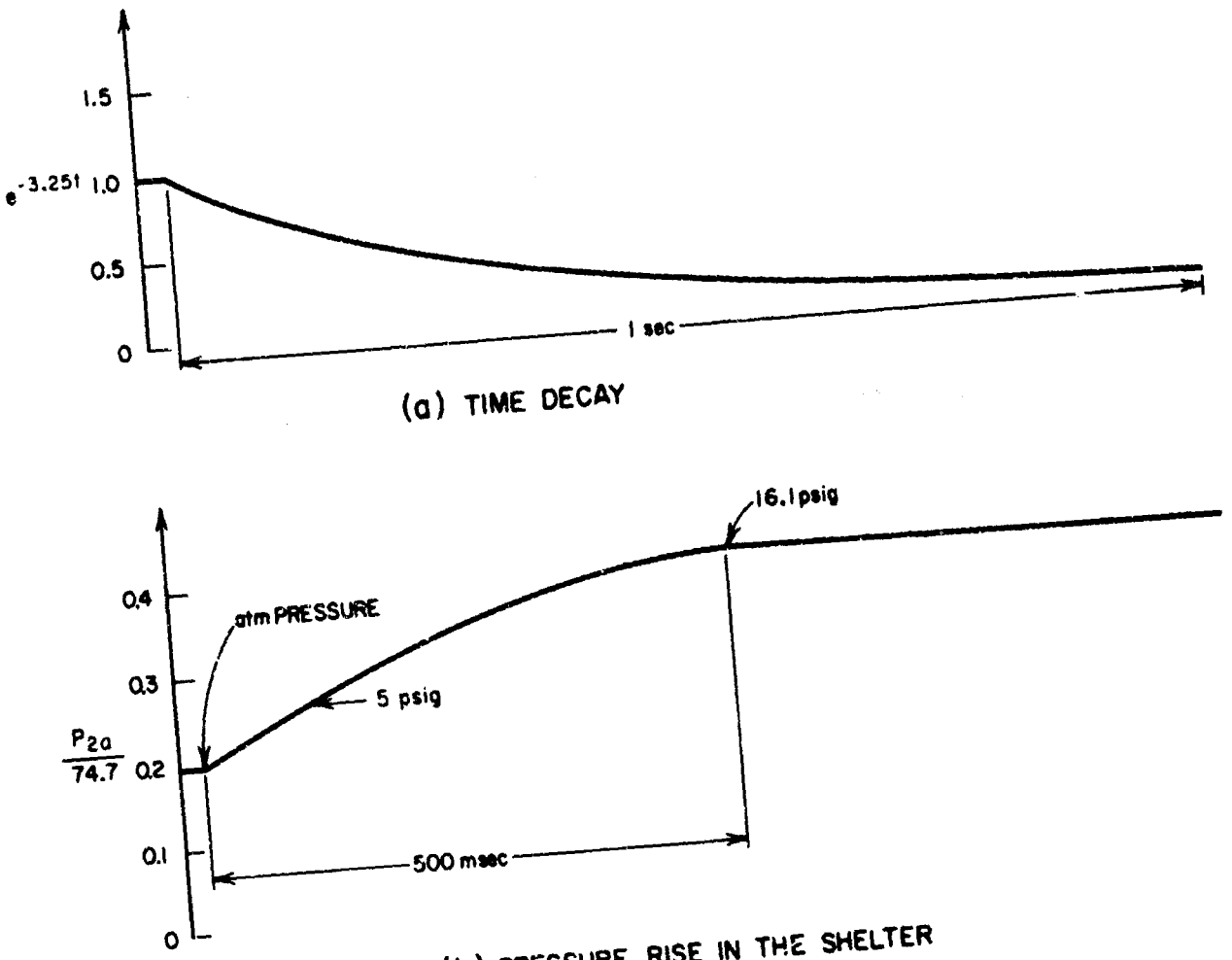

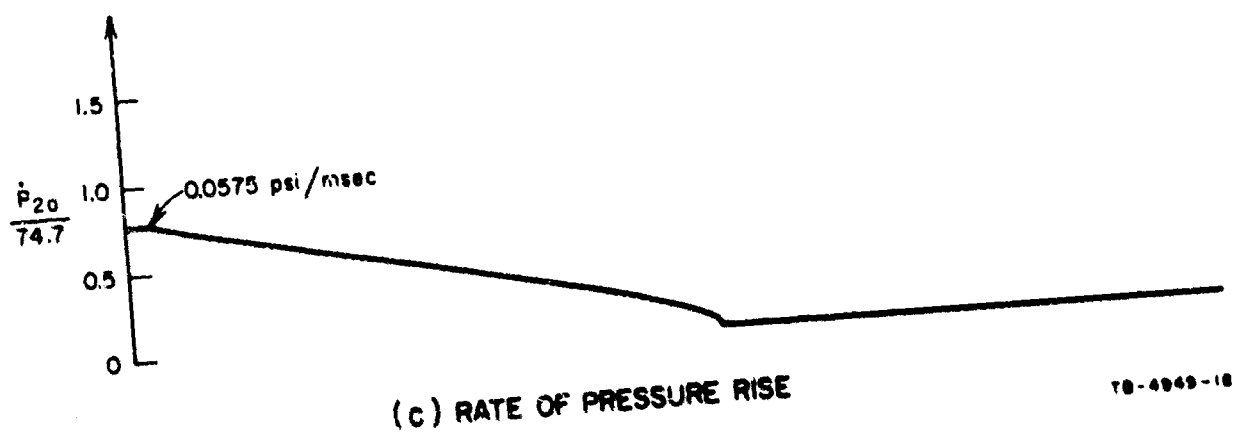

FIG. E-3 PRESSURE-RISE CURVES FOR 60 psig OVERPRESSURE

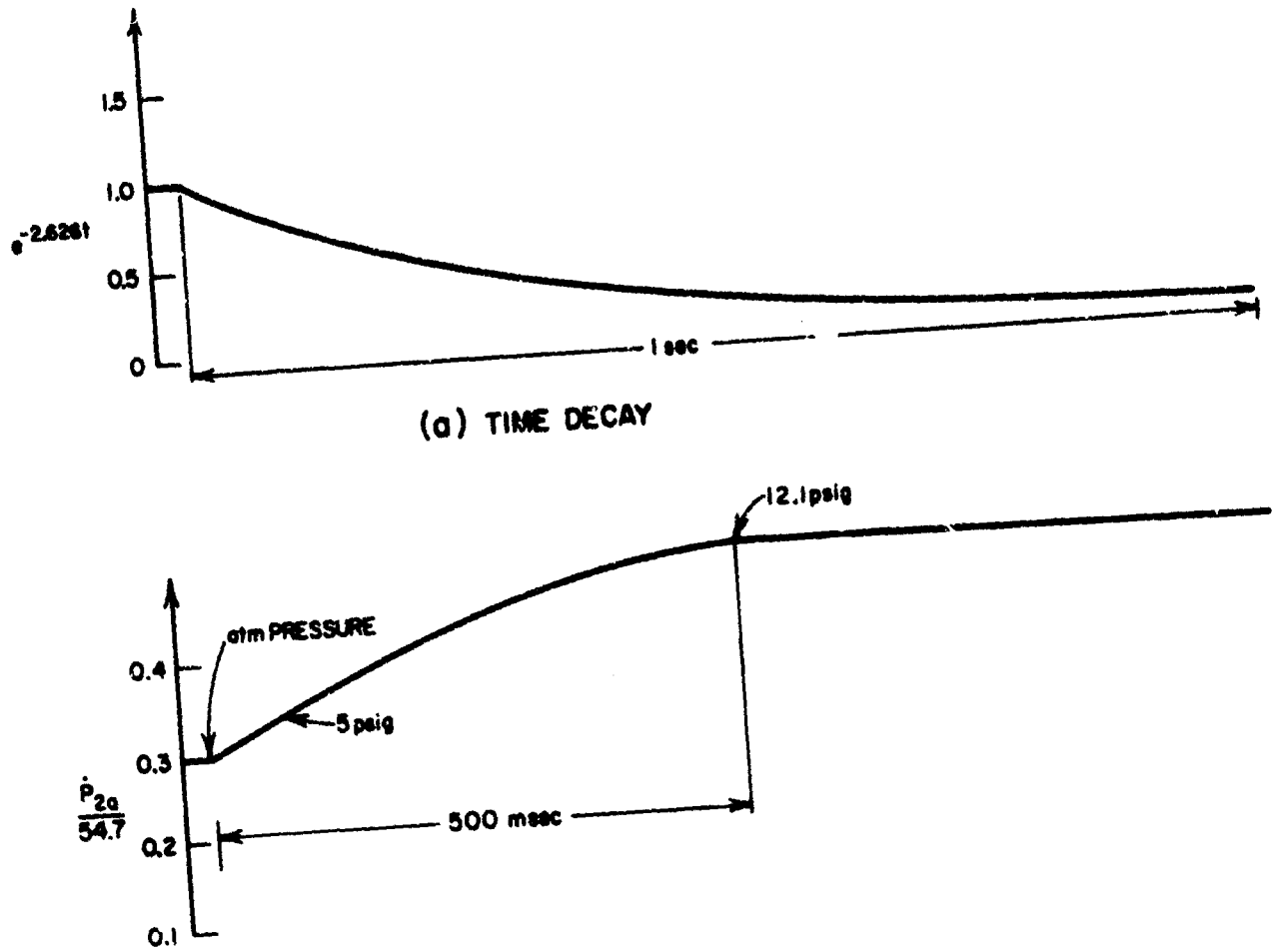

FIG. E-4 PRESSURE-RISE CURVES FOR 40 psig OVERPRESSURE

are 1.19, 1.14, 1.08, and 1.24 sec, respectively for a 1-MT bomb. These duration times can be as much as 50% off due to the uncertainty of the total energy involved in a 1-MT bomb explosion. As no precise information is available to us, t_p is taken to be 1 sec for all four $\left(P_{1a}\right)_o$'s.

Results in Fig. (E-1) show that the pressure rise in the shelter reaches its maximum in about 1/2 sec. At this instant, the upstream overpressure is equal to the pressure inside the shelter. From this instant on, the pressure inside the shelter will be decaying with the outside overpressure. The detail of this latter half decay is not shown in Figs. E-1 through E-4 because Eq. (E-4) becomes imaginary and is not applicable anymore.

Some experimental results concerning the pressure rise in the shelter were found in Ref. 13. For a shelter volume vs. opening area ratio comparable to ours, 5 psig pressure rise in the shelter was measured in Ref. 13 at an outside peak overpressure of 20 psig. Extrapolating the results of Figs. E-1(b) to E-4(b) to a peak overpressure of 20 psig gives an 8 psig pressure rise in the shelter. This over-estimation of the pressure rise is expected since our analysis does not take into account the high temperature of the blast wave.

APPENDIX F

PHYSIOLOGICAL DATA

APPENDIX F

PHYSIOLOGICAL DATA

Physiological data abstracted from Refs. 3 and 4 are reproduced in this appendix. Attention has been directed particularly towards peak overpressures as well as rates of pressure rise that may cause different degrees of damage to humans.

Figure F-1 gives relations between body weight and fast-rising overpressures of 400 milliseconds duration needed to produce 50 percent mortality. Remarks made in Ref. 3 regarding Fig. F-1 are quoted below:

Page 1006, Column 2:

"There remains the question of extrapolating interspecies blast data to larger (or smaller) animals. There is little to be said except that one should approach the extrapolation of data to any given species, including man, with considerable caution. First, it should be noted that all the animals used in the work described here were mounted against a reflecting surface and any extrapolation should keep this fact in mind. Second, the shock overpressures related or correlated with the interspecies mortality were the reflected shock pressures and one should not confuse an incident or local static-free field pressure--corresponding to the incident pressures reported here--with the reflected shock. Third, exactly what the pressure reflection would be when an incident wave strikes an animal in the open is not currently clear to the authors and certainly the data presented do not bear upon this point.

"Fourth, the extrapolation set forth in Figure [F-1] applies strictly to the pulse form studied and to an overpressure duration of about 400 msec. Fifth, for these conditions, it is not known whether man is more or less tolerant than might be implied by the 70 kg point marked in Figure [F-1]."

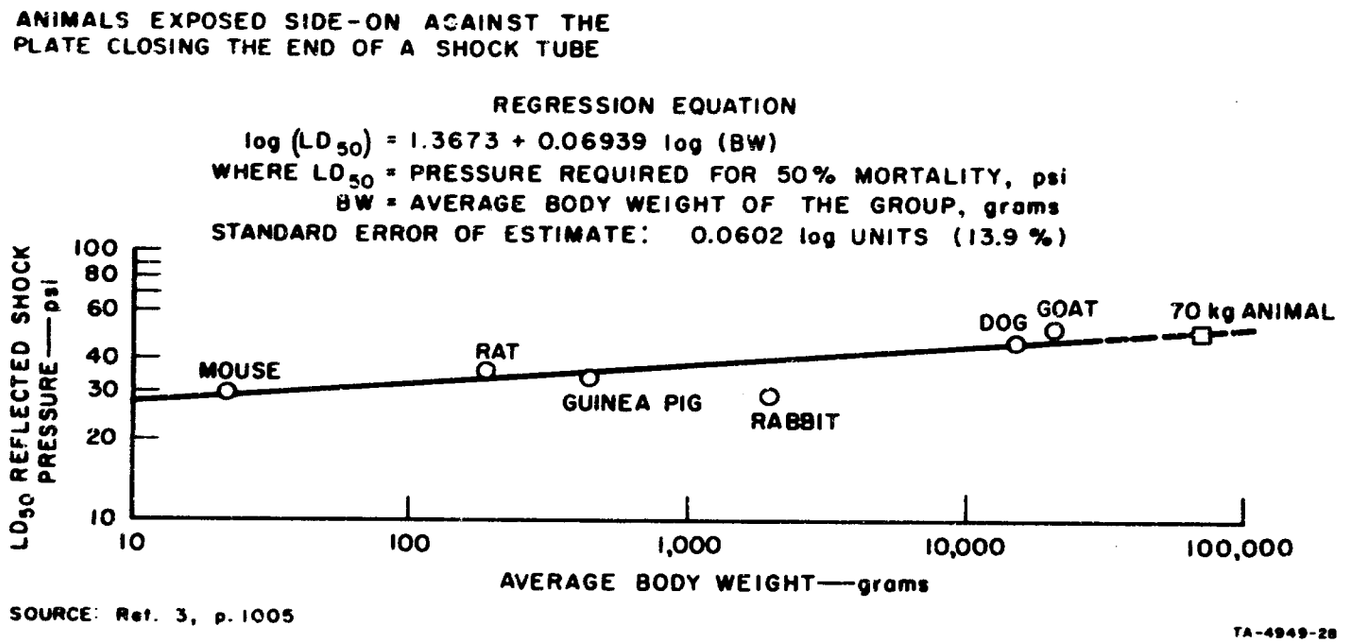

FIG. F-1 INTERSPECIES COMPARISON SHOWING THE OVERPRESSURES REQUIRED FOR 50-PERCENT MORTALITY AS A FUNCTION OF BODY WEIGHT, WITH EXTRAPOLATION TO LARGER ANIMALS

Page 1006, Column 1:

"It would seem that the extrapolation indicating that a 400 msec single sharp-rising overpressure of 50.5 psi applies to as large an animal as man and might well be considered a tentative figure subject to all the conditions mentioned above. In the meantime, one must await the results of further experimental work to define more definitively man's tolerance to blast."

Page 1008, Column 1:

"If shock loading is one of the critical factors biologically, one would expect that any degrading of the average rate of pressure rise--all other factors being equal--would be associated with increased tolerance to overpressure. Such is the case empirically."

Tables F-I and F-II give shock-tube mortality data and eardrum pressure tolerance.

Remarks made in Ref. 4, relating to Tables F-I and F-II, are quoted below.

Page 35:

"Fast-rising Overpressures of Long Duration: Nuclear detonations produce blast overpressures much longer in duration than those obtained with high explosives; e.g., like 0.5 to many seconds for the former and 1 to 20 msec for the latter. Under conditions of exposure in which pressures are applied almost instantaneously, such as might be the case for a target located against a solid surface where an incident and reflected overpressure could envelop the animal practically simultaneously, biologic tolerance is relatively low. Table F-I shows data for several species of animals exposed against a steel plate closing the end of a shock tube. Overpressures rose sharply in a few tenths of microseconds (millionths of a second) and endured several seconds for the smaller animals but only 400 msec in the experiments with dogs. A tentative estimate of man's tolerance, if exposed under similar conditions to overpressures enduring longer than 0.5 sec, is also included in the table."

Table F-I

SHOCK-TUBE MORTALITY DATA FOR FAST-RISING LONG-DURATION OVERPRESSURES WHEN INCIDENT AND REFLECTED PRESSURES ARE APPLIED ALMOST SIMULTANEOUSLY*

Animal Species	Overpressure for Indicated Mortality, psi						Threshold Pressure for Lung Injury, psi	
	1 percent		50 percent		99 percent			
	Incident	Reflected	Incident	Reflected	Incident	Reflected	Incident	Reflected
Mouse**	7	20	11	30	15	44	4	10
Rabbit**	9	25	12	33	15	44	6	15
Guinea pig**	10	28	13	37	16	48	6	15
Rat**	10	28	14	39	18	53	8	19
Dog+	15	40	17	48	20	56	7	20
→ Man++		35-45		45-55		55-65		15-25

NOTE: All incident and reflected overpressures were empirically determined. Because of geometric factors there necessarily was not the same relation between incident and reflected overpressures for experiments with the smaller and the larger animals; e.g., the reflection of a given incident pressure is less in the presence of a larger animal than it is for the smaller animal.

*Reports WT-1467, TID-6056, TID-5564, and unpublished data from an AEC project being conducted at Lovelace Foundation, Albuquerque, New Mexico.

**Durations of overpressure were 6-8 sec.

+Durations of overpressure were 400 msec.

++Tentative estimate for overpressure durations greater than 500 msec.

Source: Ref. 4, p. 36.

Table F-II

PRESSURE TOLERANCE OF THE EARDRUMS OF DOG AND MAN

Species	Maximum Pressures for the Noted Conditions		
	Minimal, psi	Average, psi	Maximal, psi
Dog*	5	31	90
→ Man**	5	20-33	43

*Data from 1953, 1955, and 1957 Nevada Field Tests; see WT-1467.

**Data from Zalewski. Human eardrum tolerance varies with age, hence the variation from 33 psi (for ages 1 to 10 years) to 20 psi (for ages above 20 years). See also Report TID-5564.

Source: Ref. 4, p. 39.

Page 37:

"Eardrums: Although eardrum rupture under emergency conditions is not in itself a serious injury, it is well to set forth the available data. Tolerance of the tympanic membranes of animals exposed to blast overpressures at the Nevada Test Site correlated fairly well with the maximum overpressure. The data are summarized in Table [F-II], which also shows results noted by Zalewski in experiments on human cadavers."

APPENDIX G

SKETCHES AND PHOTOGRAPHS OF BLAST-CLOSURE VALVES

(a) AFTER 25.6-psi TEST.

(b) AFTER 56.3-psi TEST.

(c) AFTER 110-psi TEST.

(d) AFTER 144-psi TEST.

FIG. G-1 BuSHIPS 11-BY-15-INCH BLAST CLOSURE VALVE

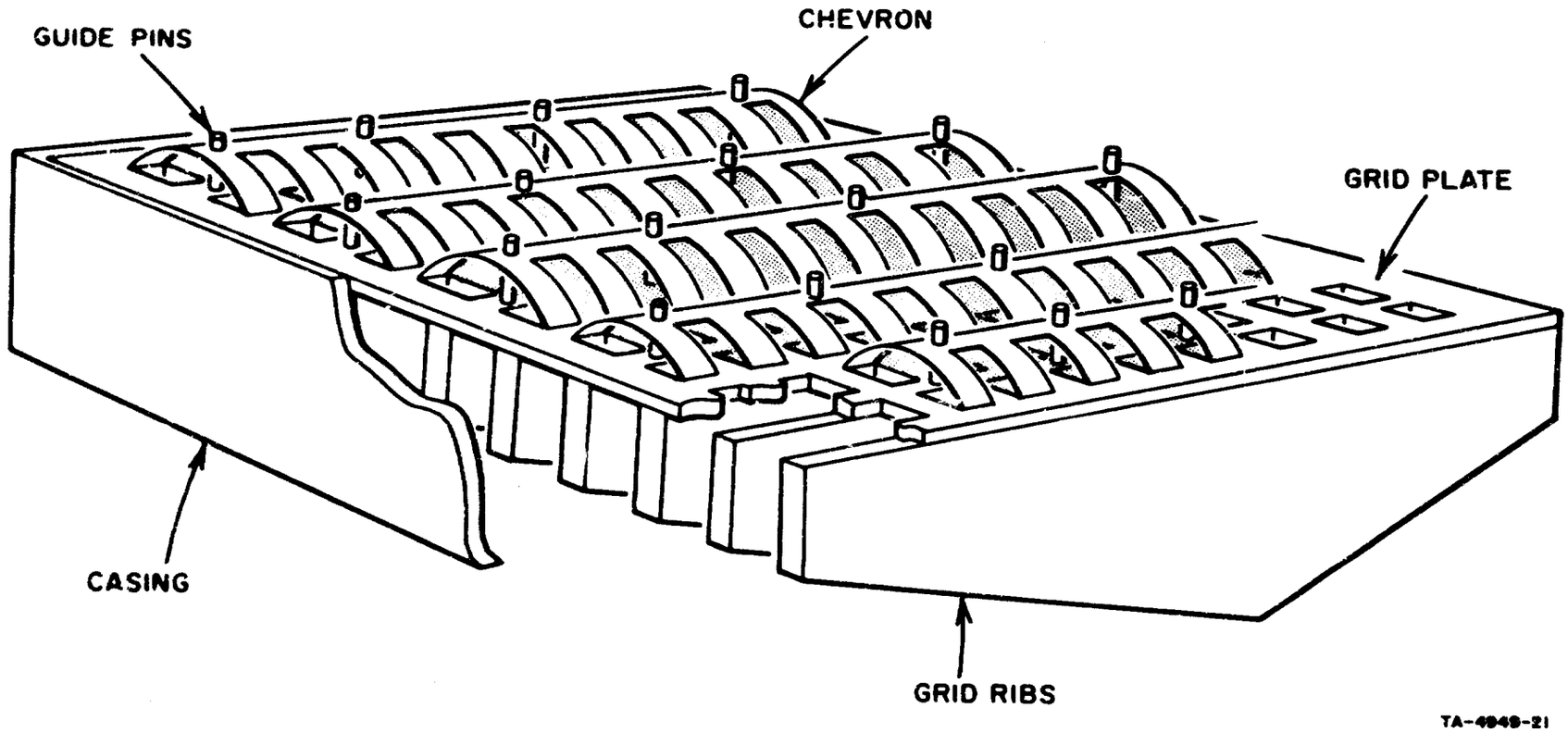

FIG. G-2 CHEVRON VALVE

DATA:

OVERPRESSURE: 100 psi

CLOSING TIME: 2.5 msec

FLOW CAPACITY: 80 cfm AT 0.3 in. H_2O

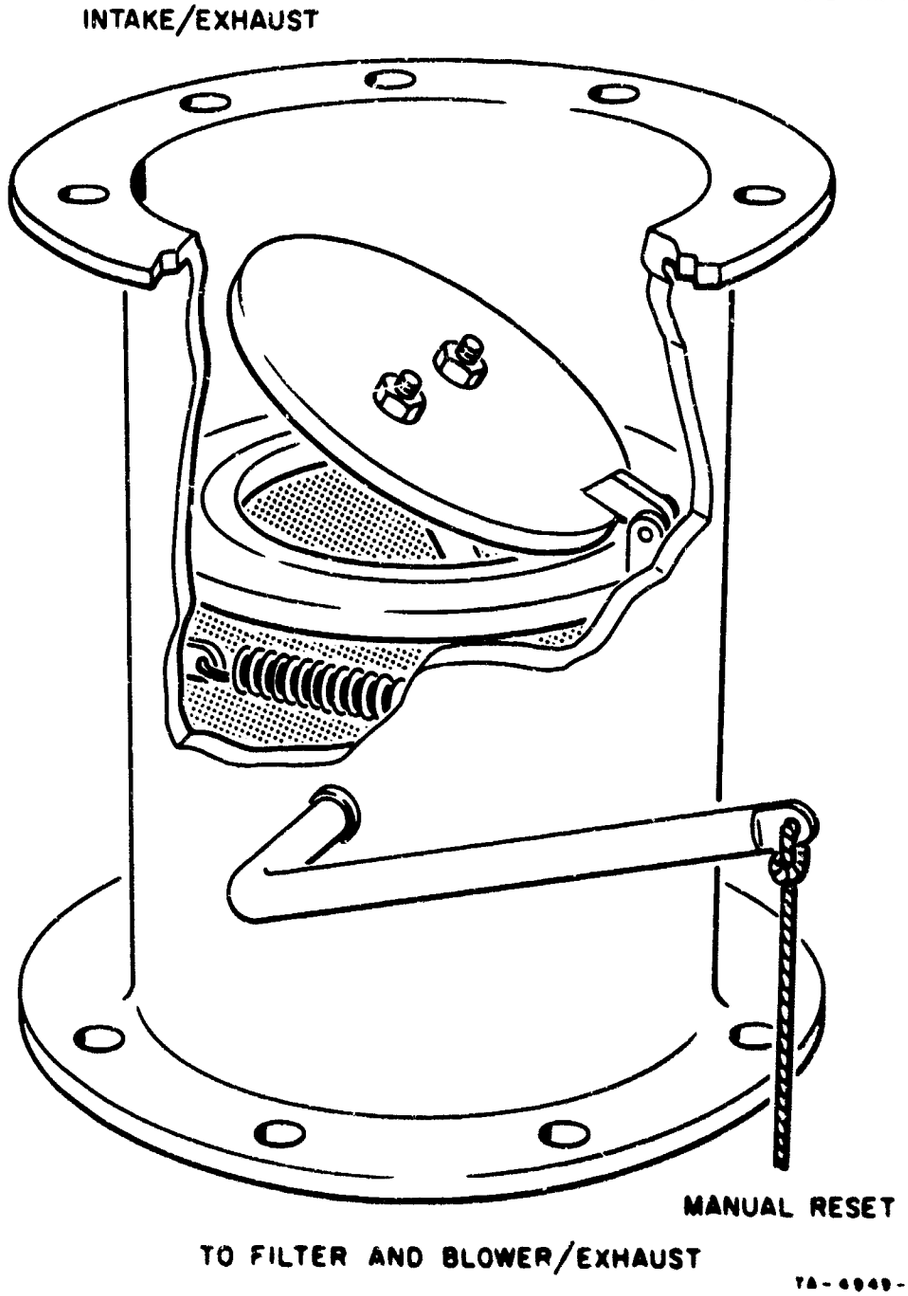

FIG. G-3 AFM BLAST-ACTUATED VALVE

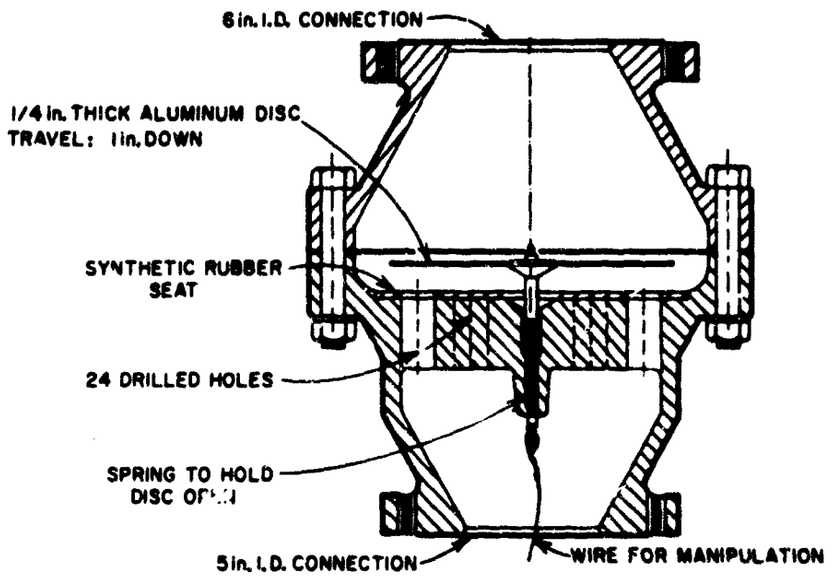

DATA:

CLOSING TIME: 1.5 msec
FLOW CAPACITY: 300 cfm
OVER PRESSURE: 100 psi

FIG. G-4 CHEMICAL WARFARE VALVE — MODEL E-4

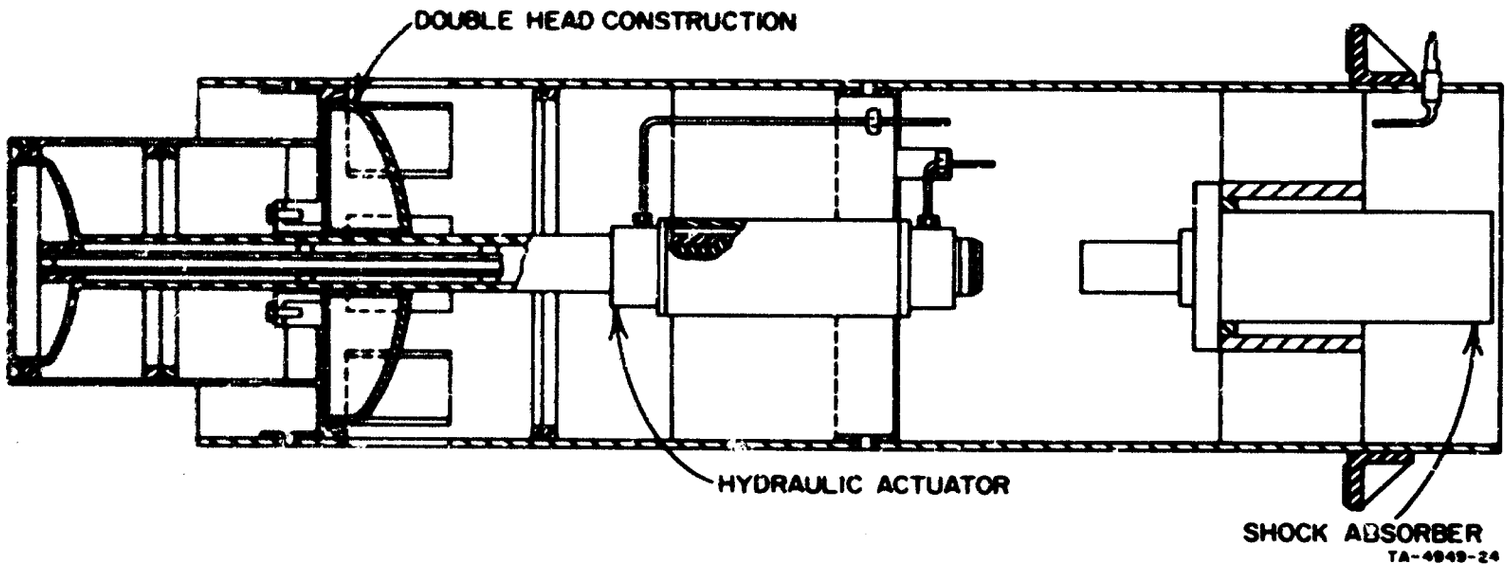

FIG. G-5 MINUTEMAN VALVE

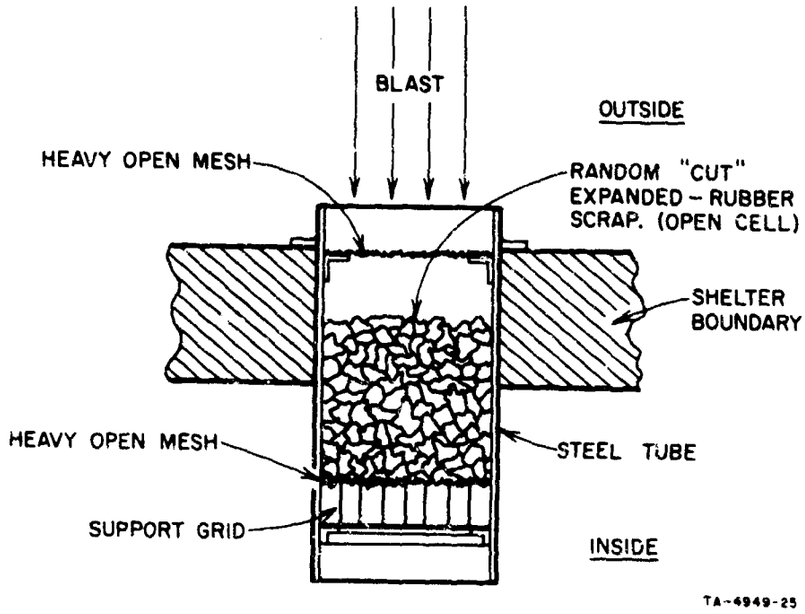

FIG. G-6 STEVENSON VALVE

In action, the soft elastomeric scrap is compressed against the inner support, thus deforming it into a fairly effective plug against leakage.

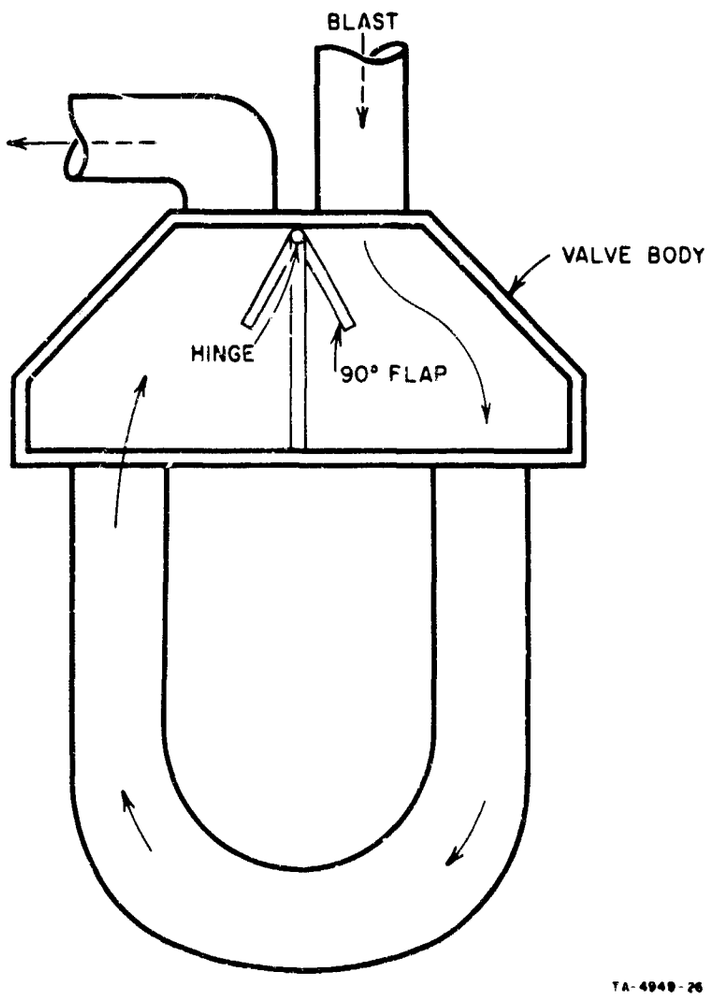

FIG. G-7 BRECKENRIDGE VALVE

So far as has been ascertained, the only commercially available blast valve which appears suitable for use in a personnel shelter is that made by Luwa A.G. Zürich, Anemonstrasse 40 8047 Zürich (see Fig. G-8).

The basic element of this valve operates in a manner similar to that of the "Chevron" design shown in Fig. G-2, except that the Luwa valve is poised in a flat plane between opposing seats when relaxed since it is intended to close against both positive and negative pressures.

It is a passive device as are the other valve candidates discussed in this report. Single closure elements are mounted in cast metal units that can be multiplexed rather simply in a frame in such a manner as to satisfy a considerable range of flow requirements.

It is claimed that this valve is able to withstand overpressure waves of up to 147 psi and is capable of closing in as little as one millisecond.

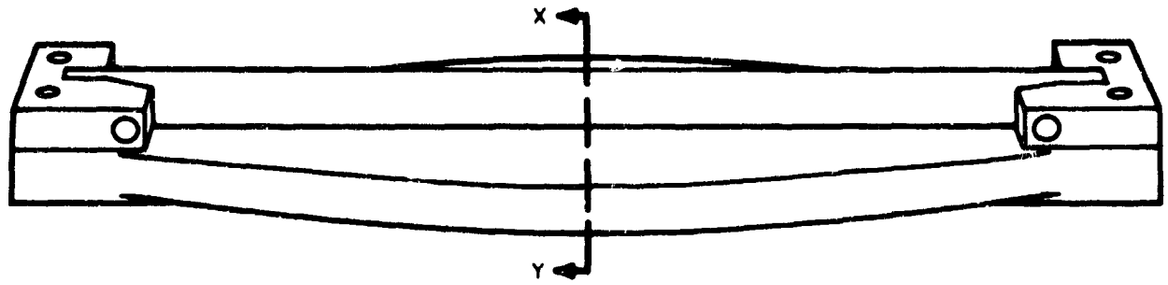

(a) VALVE

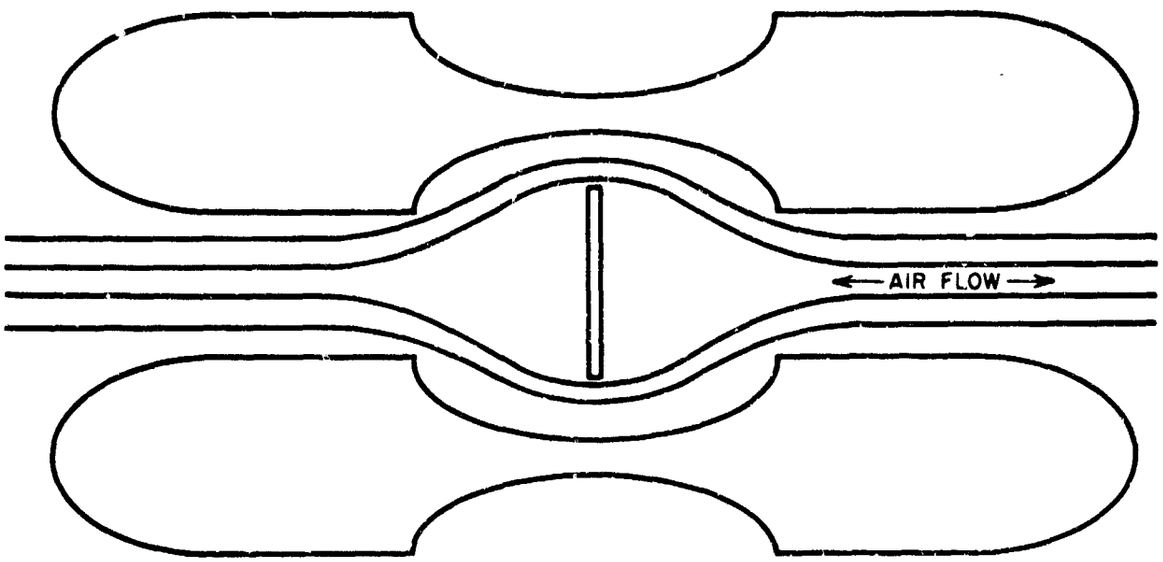

(b) SECTION X-Y

TA-4949-27

Information was received recently from Mr. Landeck of O.C.D. Washington D.C. relating to a blast valve of Swiss origin. Its operating principle is similar to that of the Chevron valve shown in Figs. 5 and 10, and discussed in Appendix B, except that it is constricted so as to react to troughs of negative pressure as well as to peak overpressure of up to 147 psi. Closing time is stated to be 1 msec at this overpressure.

The element shown in the schematic above is intended to be stacked vertically in an aligning frame which can be accommodated flush within a wall thickness of 15-3/4".

The number of elements per assembly is selected in accordance with flow requirements.

FIG. G-8 THE "LUWA" BLAST VALVE

REFERENCES

1. H. L. Brode, "A Review of Nuclear Explosion Phenomena Pertinent to Protective Constructions," Report R-425-PR, The RAND Corporation, Santa Monica, California (May 1964).

2. H. L. Brode, "Space Plots of Pressure, Density and Particle Velocity for the Blast Wave From a Point Source," Research Memorandum RM-1913-AEC, The RAND Corporation, Santa Monica, California ASTIA Document No. AD 133043 (3 June 1957).

3. D. R. Richmond, et al., "Biological Effects of Overpressure," Aero-Space Medicine, Vol. 32, No. 11 (November 1961).

4. C. S. White, et al., "Comparative Nuclear Effects of Biomedical Interest," CEX-58.8, U.S. Atomic Energy Commission, Civil Effects Test Operations (12 January 1961).

5. R. J. Baschiere, "Analysis of Fallout Shelter Ventilation Requirements," Final Report MRD 1240, General American Transportation Corp. (May 1964).

6. H. F. Behls, "Tandem-Drive Packaged Ventilation Unit," Interim Report MRD 1244-4, General American Transportation Corp. (September 1964).

7. R. Revenko, "A Study of Blast Closure Devices," Technical Documentary Report No. AFSWC-TDR-62-10 (February 1962).

8. R. S. Chapler, "Evaluation of Four Blast-Closure Valves," Technical Report R 347, U.S. Naval Civil Engineering Laboratory (4 January 1965).

9. R. A. Breckenridge, "Preliminary Development and Tests of a Blast-Closure Valve," Technical Note N-460, U.S. Naval Civil Engineering Laboratory (September 1962).

10. L. S. Jacobson and R. S. Ayre, Engineering Vibrations, p. 29 (McGraw-Hill Book Co., Inc., New York, New York, 1958).

11. J. P. Den Hartog, Mechanical Vibration, 3 ed. (McGraw-Hill Book Co., Inc., New York, New York, 1947).

12. "Recommended Voluntary Standard Formulas for Sizing Control Valves," Fluid Controls Institute, Inc. (1962).

13. G. K. Sinnamon, "Air Blast Effects on Entrances and Air Intakes of Underground Installations," Operation Upshot - Knothole, Nevada Proving Grounds (March 1953) (CFRD).

DISTRIBUTION LIST

ORGANIZATION	NO. OF COPIES
Office of Civil Defense Office of the Secretary of the Army Washington, D.C. 20310 Attn: Assistant Director for Civil Defense (Research)	81
Army Library, Civil Defense Unit Pentagon Washington, D.C. 20310	3
Assistant Secretary of the Army R&D Washington, D.C. 20310 Attn: Assistant for Research	1
Chief of Naval Operations (Op-07T10) Department of the Navy Washington, D.C. 20360	1
Chief, Bureau of Naval Weapons (Code RRRE-5) Department of the Navy Washington, D.C. 20360	1
Chief of Naval Research (Code 104) Department of the Navy Washington, D.C. 20350	1
Chief, Bureau of Medicine and Surgery Department of the Navy Washington, D.C. 20360	1
Chief, Bureau of Supplies and Accounts (Code L12) Department of the Navy Washington, D.C. 20360	1
Chief, Bureau of Yards and Docks Office of Research (Code 74) Department of the Navy Washington, D.C. 20360	1
U.S. Naval Civil Engineering Laboratory Port Hueneme, California	1

UNCLASSIFIED
Security Classification

DOCUMENT CONTROL DATA - R&D

(Security classification of title, body of abstract and indexing annotation must be entered when the overall report is classified)

1. ORIGINATING ACTIVITY *(Corporate author)* Stanford Research Institute Menlo Park, California	2a. REPORT SECURITY CLASSIFICATION Unclassified 2b. GROUP

3. REPORT TITLE

Blast-Closure Valves

4. DESCRIPTIVE NOTES *(Type of report and inclusive dates)*

Final

5. AUTHOR(S) *(Last name, first name, initial)*

Hughes-Caley, F. and R. Kiang

6. REPORT DATE January 1966	7a. TOTAL NO. OF PAGES 118	7b. NO. OF REFS 13

8a. CONTRACT OR GRANT NO. OCD-PS-64-201 b. PROJECT NO. OCD Work Unit 1121C c. d.	9a. ORIGINATOR'S REPORT NUMBER(S) SRI Project 4949 9b. OTHER REPORT NO(S) *(Any other numbers that may be assigned this report)*

10. AVAILABILITY/LIMITATION NOTICES

Distribution of this document is unlimited.

11. SUPPLEMENTARY NOTES	12. SPONSORING MILITARY ACTIVITY Office of Civil Defense Office of the Secretary of the Army Washington, D.C. 20310

13. ABSTRACT

Four candidate blast closure valves for the ventilation openings of the domestic type personnel shelter are investigated theoretically. The calculated closing times of all four are one tenth or less of the required closing time, which is defined as the longest time the closure valve may stay open before the pressure build-up in the shelter exceeds the tolerable limit. For a 50-person shelter with an assumed tolerable limit of 5 psig pressure rise in the shelter, the longest required closing times for 100, 80, 60, and 40 psig ambient overpressures are 60, 75, 110, and 140 msec, respectively. Since analysis indicates that all four of the investigated candidate valves will be determined only on the basis of reliability and cost. If sufficient confidence can be established in the physiological data given in Appendix F, the tolerable limit of pressure rise can be elevated to 23 psig (see Appendix E). In that case, ventilation openings will not require blast closures provided of course that the openings are well protected from penetration of blast-borne missiles and debris that might damage ventilating and other equipment or injure personnel

DD FORM 1 JAN 64 1473

UNCLASSIFIED
Security Classification

14. KEY WORDS	LINK A ROLE	LINK A WT	LINK B ROLE	LINK B WT	LINK C ROLE	LINK C WT
Shelters						
Ventilation openings						
Pressure build-up						
Blast-closure valves						

INSTRUCTIONS

1. ORIGINATING ACTIVITY: Enter the name and address of the contractor, subcontractor, grantee, Department of Defense activity or other organization *(corporate author)* issuing the report.

2a. REPORT SECURITY CLASSIFICATION: Enter the overall security classification of the report. Indicate whether "Restricted Data" is included. Marking is to be in accordance with appropriate security regulations.

2b. GROUP: Automatic downgrading is specified in DoD Directive 5200.10 and Armed Forces Industrial Manual. Enter the group number. Also, when applicable, show that optional markings have been used for Group 3 and Group 4 as authorized.

3. REPORT TITLE: Enter the complete report title in all capital letters. Titles in all cases should be unclassified. If a meaningful title cannot be selected without classification, show title classification in all capitals in parenthesis immediately following the title.

4. DESCRIPTIVE NOTES: If appropriate, enter the type of report, e.g., interim, progress, summary, annual, or final. Give the inclusive dates when a specific reporting period is covered.

5. AUTHOR(S): Enter the name(s) of author(s) as shown on or in the report. Enter last name, first name, middle initial. If military, show rank and branch of service. The name of the principal author is an absolute minimum requirement.

6. REPORT DATE: Enter the date of the report as day, month, year; or month, year. If more than one date appears on the report, use date of publication.

7a. TOTAL NUMBER OF PAGES: The total page count should follow normal pagination procedures, i.e., enter the number of pages containing information.

7b. NUMBER OF REFERENCES: Enter the total number of references cited in the report.

8a. CONTRACT OR GRANT NUMBER: If appropriate, enter the applicable number of the contract or grant under which the report was written.

8b, 8c, & 8d. PROJECT NUMBER: Enter the appropriate military department identification, such as project number, subproject number, system numbers, task number, etc.

9a. ORIGINATOR'S REPORT NUMBER(S): Enter the official report number by which the document will be identified and controlled by the originating activity. This number must be unique to this report.

9b. OTHER REPORT NUMBER(S): If the report has been assigned any other report numbers *(either by the originator or by the sponsor)*, also enter this number(s).

10. AVAILABILITY/LIMITATION NOTICES: Enter any limitations on further dissemination of the report, other than those imposed by security classification, using standard statements such as:

(1) "Qualified requesters may obtain copies of this report from DDC."

(2) "Foreign announcement and dissemination of this report by DDC is not authorized."

(3) "U. S. Government agencies may obtain copies of this report directly from DDC. Other qualified DDC users shall request through _____."

(4) "U. S. military agencies may obtain copies of this report directly from DDC. Other qualified users shall request through _____."

(5) "All distribution of this report is controlled. Qualified DDC users shall request through _____."

If the report has been furnished to the Office of Technical Services, Department of Commerce, for sale to the public, indicate this fact and enter the price, if known.

11. SUPPLEMENTARY NOTES: Use for additional explanatory notes.

12. SPONSORING MILITARY ACTIVITY: Enter the name of the departmental project office or laboratory sponsoring *(paying for)* the research and development. Include address.

13. ABSTRACT: Enter an abstract giving a brief and factual summary of the document indicative of the report, even though it may also appear elsewhere in the body of the technical report. If additional space is required, a continuation sheet shall be attached.

It is highly desirable that the abstract of classified reports be unclassified. Each paragraph of the abstract shall end with an indication of the military security classification of the information in the paragraph, represented as *(TS)*, *(S)*, *(C)*, or *(U)*.

There is no limitation on the length of the abstract. However, the suggested length is from 150 to 225 words.

14. KEY WORDS: Key words are technically meaningful terms or short phrases that characterize a report and may be used as index entries for cataloging the report. Key words must be selected so that no security classification is required. Identifiers, such as equipment model designation, trade name, military project code name, geographic location, may be used as key words but will be followed by an indication of technical context. The assignment of links, rules, and weights is optional.