SECTION

36108

THE JOHNS HOPKINS UNIVERSITY
APPLIED PHYSICS LABORATORY
8621 GEORGIA AVE., SILVER SPRING, MD.

Operating Under Contract NOrd 7386
With the Bureau of Ordnance, U. S. Navy

AD 636108

HIGH ALTITUDE ARCH USING THE V-2 KET

MARCH 1946—APRIL 1947

By

L. W. FRASER and E. H. SIEGLER

AD-636 108

TO: CFSTI
ATTN: Mr. Paul Larsen

The attached document has been loaned to DDC for announcement purposes. This copy is not to be [redacted]

Bumb
Repor
Copy

CLEARINGHOUSE
FOR FEDERAL SCIENTIFIC AND
TECHNICAL INFORMATION

Hardcopy	Microfiche		
$9.60	$.75	97 pp.	as

1 ARCHIVE COPY

AD-636108

SECTION

THE JOHNS HOPKINS UNIVERSITY
APPLIED PHYSICS LABORATORY
8621 GEORGIA AVE., SILVER SPRING, MD.

Operating Under Contract NOrd 7386
With the Bureau of Ordnance, U. S. Navy

HIGH ALTITUDE RESEARCH USING THE V-2 ROCKET

MARCH 1946—APRIL 1947

By

L. W. FRASER and E. H. SIEGLER

Bumblebee Series
Report No. 81
Copy No. 308

July 1948

DISTRIBUTION OF THIS
DOCUMENT IS UNLIMITED

DISCLAIMER NOTICE

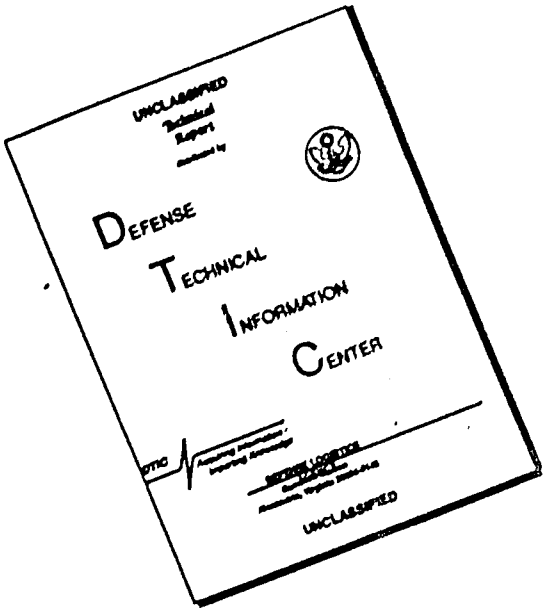

THIS DOCUMENT IS BEST QUALITY AVAILABLE. THE COPY FURNISHED TO DTIC CONTAINED A SIGNIFICANT NUMBER OF PAGES WHICH DO NOT REPRODUCE LEGIBLY.

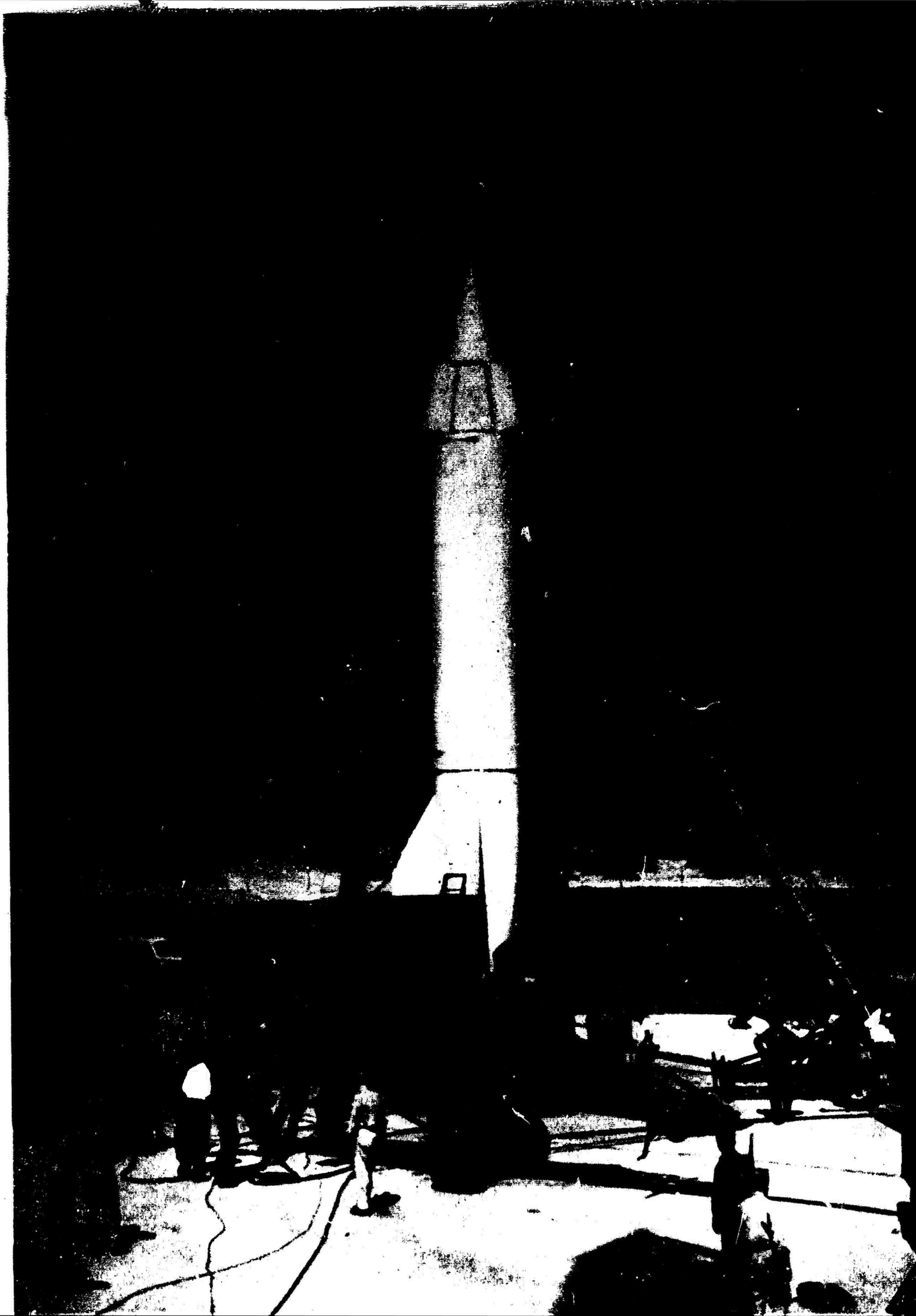

The Johns Hopkins University
Applied Physics Laboratory
8621 Georgia Ave., Silver Spring, Md.

OPERATING UNDER CONTRACT NORD 7386
WITH THE BUREAU OF ORDNANCE, U.S.NAVY

HIGH ALTITUDE RESEARCH USING THE V-2 ROCKET

MARCH 1946 ---- APRIL 1947

Bumblebee Report No.81

DISTRIBUTION OF THIS
DOCUMENT IS UNLIMITED

TABLE OF CONTENTS

CHAPTER I — INTRODUCTION 1

Upper Atmosphere Research in General
High Altitude Research Program at APL

CHAPTER II — THE V-2 AS A RESEARCH VEHICLE 5

Physical Characteristics of the Rocket
Modification of the Rocket for Scientific Use
Tracking and Reduction of Ballistic Data
Power for V-2 Experiments
Telemetering
Data Recording and Recovery

CHAPTER III — COSMIC RAY STUDIES 45

Preliminary Cosmic Ray Experiments
Equipment and Circuits for V-2 Cosmic Ray Experiments
Review of Results of Cosmic Ray Experiments
Cosmic Ray Film Experiment
Cosmic Ray Altitude Meters

CHAPTER IV — SOLAR SPECTRA OBTAINED AT HIGH ALTITUDE 69

The APL Spectrograph
Yerkes Observatory Spectrograph

CHAPTER V — HIGH ALTITUDE PHOTOGRAPHY OF THE EARTH 75

CHAPTER VI — MISCELLANEOUS V-2 EXPERIMENTS 81

Angular Motion of the V-2 During Flight
Photocell Orientor
Gyro Systems
Earth Camera
Artificial Meteor and Smoke Puff Experiments
Biological Experiment

LIST OF ILLUSTRATIONS

Figure No.		Page
FRONTISPIECE	- Preparing a V-2 for Launching	11
1	V-2 Assembly	6
2	Trajectory of A-4 Launched 24 October 1946	7
3	Trajectory of A-4 (V-2) Rocket Launched 17 December 1946	8
4	Trajectory of A-4 (V-2) Rocket Launched 30 July 1946	15
5	Trajectory of A-4 (V-2) Rocket Launched 30 July 1946	16
6	Trajectory of A-4 (V-2) Rocket Launched 24 October 1946	17
7	Trajectory of A-4 (V-2) Rocket Launched 17 December 1946	18
8	Trajectory of A-4 (V-2) Rocket Launched 17 December 1946	19
9	Trajectory of A-4 (V-2) Rocket Launched 17 December 1946	20
10	Trajectory of A-4 (V-2) Rocket Launched 1 April 1947	21
11	Roll vs Time for V-2 fired 1 April 1947	22
12	Trajectory of A-4 (V-2) Rocket Launched 1 April 1947	23
13	Trajectory of A-4 (V-2) Rocket Launched 8 April 1947	24
14	Trajectory of A-4 (V-2) Rocket Launched 8 April 1947	25
15	Trajectory of A-4 (V-2) Rocket Launched 8 April 1947	26
16	Voltage Supply For Geiger Tubes	28
17	Primary Power Supply Batteries	28
18	V-2 Control Circuit	29
19	Control Circuit Components	31
20	Calibration Curve for Telemetering Channel No. 6	33
21	Section of NRL Telemetering Record	33
22	V-2 Afterbody after Impact	36
23	Relatively small Impact Damage to V-2 Shown by Closeup View of Tail Structure	36
24	Forward Portion of Afterbody after Impact	36
25	Warhead as Found After Impact	37
26	Warhead After Excavation	37
27	Cam-actuated Timing Device	39
28	Warhead Blow-off Timer Installed in Control Compartment	39
29	Recorder Ejection Equipment	40
30	Unequipped Warhead Showing Location of Grenade Launcher and Equipment Ejection Ports	41
31	Brass Tape Recorder and Steel Protecting Cylinder	41
32	Portion of Laboratory Test Record	43
33	Assembly of Early Cosmic Ray Instrumentation Prior to Installation in V-2 Warhead	46
34	Housing and Cosmic Ray Instrumentation	46
35	Condition of Cosmic Ray Recorder Cylinder after Impact	47
36	Fundamental Geiger Tube Circuit	48
37	Single Section of Scaling Circuit	49
38	Typical Rossi Coincidence Circuit	50
39	General Circuitry for Cosmic Ray Experiments	51
40	Pulse-Shaping Circuit	52

Figure No.		Page

41 Top View of Telemetering Premodulator 53
42 Bottom View of Telemetering Premodulator Chassis 53
43 Recorder Driver Amplifier Circuit 54
44 Geiger Tube Calibrator 55
45 Calibrator Timer 55
46 Warhead Instrumentation 57
47 Assembly of Cosmic Ray Instrumentation Prior to Mounting in Warhead . 58
48 Arrangement of Warhead Instrumentation 59
49 Cosmic Ray Telescope 60
50 Construction of Cosmic Ray Telescope 61
51 Cosmic Ray Telescope Mounted in Warhead 62
52 Cosmic Ray Intensity vs Altitude 65
53 Cosmic Ray Altimeter 66
54 Cosmic Ray Altimeter Circuit 67
55 Power Supply Circuit for Cosmic Ray Altimeter 67
56 Flight Calibration for Cosmic Ray Altimeter 68
57 Film Cassette of Solar Spectrograph 70
58 Rocket-Borne Solar Spectrograph 70
59 Solar Spectra Obtained During April 1, 1947 Flight of V-2 71
A. Solar Spectrum from V-2 on Ground.
B. Solar Spectrum from V-2 at height of 50 miles.
C. Microphotograph Tracing of Spectrum B.
60 Yerkes Solar Spectrograph Installed in V-2 73
61 The Earth Viewed from 140,000 feet 76
62 San Andreas Mountains from 200,000 feet 76
63 The Earth Viewed from 65 miles 76
64 Camera used for High Altitude Motion Pictures 77
65 Camera Housing 77
66 Mounting of Motion Picture Cameras in V-2 for October 1946 and April 1947 flights 79
67 Gyro Orienters Used in V-2 80
68 Gyro Orienters Mounted on Warhead Baseplate 80
69 Gyro Orienter Circuit 83
70 Trace of Intersection of Camera Optical Axis and Surface of Earth - From Flight of V-2, October 24, 1946 84
71 Stream of Particles Produced by M9A1 Grenade 86
72 M9A1 Grenade 87
73 Modified M9A1 Grenade 88
74 Launching Equipment for Smoke Puff Experiment 89
75 Fungus Spores in Lucite Cylinder Mounted in Recorder Case 89

High Altitude Research Using The V-2 Rocket

Chapter I

INTRODUCTION

The development within recent years of rockets capable of reaching very high altitudes has given the field of upper atmosphere research a new and potent experimental tool. The Applied Physics Laboratory (APL) is one of a number of agencies cooperating in an extensive series of high altitude studies carried on in connection with the U. S. Army's V-2 rocket test program; the present report is concerned primarily with APL's participation in this research during the period, March 1946 to May 1947. The Laboratory's work in this field after the latter date will be covered in future reports.

Upper Atmosphere Research in General

Atmospheric research as a whole may be said to be of two general kinds: (a) direct, in which experimental data are taken at the actual altitudes being studied, and (b) indirect, in which various high altitude conditions and phenomena are deduced from data taken on the earth's surface. Prior to the use of rockets the ceiling for direct atmospheric research was determined by the altitude that could be reached by free balloons carrying recording or telemetering equipment. The maximum height of such flights has been approximately 25 miles with the average being less than 20 miles.

In the category of indirect experiments which have added enormously to man's knowledge of the upper atmosphere there have been, among others, studies of the solar spectrum; of the spectrum, height and intensity of auroral light; of the anomalous transmission of sound waves from explosions; of the height, velocity, deceleration, and luminosity of meteors; of the absorption spectrum of ozone; of the reflection of radio waves by the ionosphere; of the reflection of searchlight beams; of the light of the night sky; and of the periodic and non-periodic variations of the earth's magnetic field.

Although the total amount of upper atmosphere information gained by the above procedures has been great, there remain many questions which have not been answered and which, in fact, may not be answerable without obtaining direct measurements at altitudes much higher than have been possible in the past. Examples of such problems include the following:

1. Percentage composition of the atmosphere at high altitude. Although auroral spectroscopy and study of the light of the night sky provide ample evidence of the existence of oxygen and nitrogen at heights of several hundred miles, almost nothing is known of the percentage composition of the atmosphere at these levels. Neither is it known whether there is sufficient turbulence in the upper atmosphere to assure substantially constant gaseous composition as a function of altitude (as is true close to the earth), or whether gravitational effects produce a relative increase in the amount of the lighter gases (helium and hydrogen) at higher levels. Collection of air samples at various altitudes, which is feasible with rocket techniques, would provide information on this matter.

2. Spectrum of the sun. Until about a year ago direct knowledge of the solar spectrum was limited to measurements made on or near the earth. Because of atmospheric absorption these did not extend below a wave length of 2900 Å. As will be mentioned in greater detail later in this report, rocket-borne spectrographs have recently provided a considerable amount of solar spectra data down to 2300 A, and it is possible that within another year the long-standing controversy concerning the so-called "ultraviolet excess" of the sun's spectrum may be settled.

3. Properties of the ionosphere. Although the body of knowledge about the ionosphere is large it does not include a great deal of information on ionization density between the ionospheric layers; this problem is now being subjected to direct experiment using rocket techniques.

4. Cosmic ray studies. There is some difference of opinion among scientists as to whether rockets can play or are playing a role in cosmic ray research which is not better filled by free balloons. However, cosmic ray study using rocket-borne instruments is proceeding and it seems fair to say that certain facts, at least, have been and will be established in this fashion with greater certainty than could ever be possible using balloon equipment. A major section of this report is concerned with cosmic ray information accumulated by APL in connection with the V-2 rocket program.

These are but a few of the pending problems in upper atmosphere research which appear to be open to successful attack by using rockets which makes it possible to transport measuring equipment to previously inaccessible altitudes. Although such experiments have been in progress for only a relatively short time, they have already proved their worth and will undoubtedly become increasingly valuable as more experience in their application is acquired.

High-Altitude Research Program at APL

By the beginning of 1946 the Ordnance Department, U. S. Army, had completed its plans to fire a series of 25 captured German V-2 rockets for military appraisal. These were to be launched at the Army's White Sands Proving Grounds in New Mexico. In January, at the invitation of Army Ordnance, representatives of APL attended a conference of service and university groups called to discuss the possibility of using the warhead space in the V-2 rockets to carry research equipment, giving the rocket tests a scientific as well as a military value. In this and subsequent meetings, APL expressed its interest in participating vigorously in this program both as an effort to pure research and as a supplement to its guided-missile program. The problem assignment which was drawn up to cover this work, and which was approved by the Bureau of Ordnance, U. S. Navy, in February 1946, states in part that the Laboratory is "to perform basic scientific work and instrumentation in the study of the physics of the upper altitudes. Specific investigations will include solar spectroscopy, cosmic ray studies, flight properties of missiles, ionosphere studies, pressure and constitution of the atmosphere, temperatures of the surface of missiles, and measurement of the solar constant." To date, work has mainly been concentrated on the first three of the problem statement assignments.

The High-Altitude Research Group of APL was organized in late February 1946 and began work immediately preparing research equipment to be fired in V-2 rockets. The Laboratory was assigned, on an average, every fourth V-2 with other participating laboratories using the intervening ones. Subsequent extension of the Army's firing program to 75 rockets greatly increased the research possibilities of this particular series of experiments.

While APL participation in the V-2 program was still in an early planning stage conversations were initiated with the Aerojet Engineering Company---a Section T associate contractor---and with the Douglas Aircraft Company relative to the procurement of a series of small sounding rockets. It was proposed that these would be generally patterned after the successful WAC Corporal rocket (Army Ordnance-Galcit) but with instrument volume and altitude specifications more suited to high-altitude research requirements. In May 1946 a Bureau of Ordnance contract was awarded to the Aerojet Engineering Company for the design, testing and fabrication of 20 such sounding rockets, the vehicle to be known as the Aerobee.[1] The Office of Naval Research was also interested in a research rocket of this type and agreed to contribute one-fourth of the total Aerojet contract amount in return for five of the twenty vehicles, to be used by the Naval Research Laboratory.[2]

Objectives of the Aerobee program are as follows:

1. To provide a relatively inexpensive vehicle for research in the physics of the upper atmosphere.

2. To advance engineering experience and practice in the design, testing and launching of liquid-fueled rockets while at the same time making available a proven missile of potential military value as a basis for an antiaircraft guided missile;

3. To provide experience within the Navy and its contractors in the practical handling, servicing, fueling, launching and tracking of rockets of potential military type; it is anticipated that shipboard launching may be included in the Aerobee program at an appropriate later date.

The schedule of Aerobee development as originally set up called for first launchings in late 1947 and 1948.[3]

Current work in the high altitude research program is being concentrated on the study of basic physical phenomena concerning which balloon flights and indirect experiments have given and probably would continue to give either no data or inconclusive data. Cooperating with APL in this program are:

---

[1] The design and operation of the Aerobee is the subject of a BUMBLEBEE Report to be issued in the near future.

[2] In the ONR program the rocket is known as Venus instead of Aerobee.

[3] The date of preparation of this report makes it possible to state that three Aerobees had been fired by April 1948. Performance was essentially as predicted, a peak altitude of 380,000 feet being achieved with a velocity of about 4300 ft/sec at the end of powered flight.

1. Three Section T associate contractors - New Mexico School of Mines,[4] New Mexico College of Agriculture and Mechanic Arts, and University of Virginia;

2. One sub-contractor - Yerkes Observatory of the University of Chicago;

3. Four agencies working on a cooperative non-contract basis - Department of Terrestrial Magnetism of the Carnegie Institution, Harvard College Observatory, California Institute of Technology, and National Institute of Health.

At present secondary emphasis is being placed on military applications of this research; however, most of the personnel in the APL High Altitude Group either are or have been associated also with military development work so that already a number of military applications of possible future importance have been suggested.

Because the present report is planned as the first of several to be issued in the BUMBLEBEE series and covering more or less chronologically the upper atmosphere research of this Laboratory and its associates, the background of the program as a whole has been discussed here in some detail. The remainder of the report is limited to consideration of the work carried on from March 1946 to May 1947 during which period this Laboratory was responsible for the instrumentation of seven of the V-2 rockets fired at White Sands.

---

[4] New Mexico School of Mines was a Section T associate contractor during the first part of this work but has not been since March 1948.

Chapter II

THE V-2 AS A RESEARCH VEHICLE

This section of the report is devoted to a description of the V-2 rocket as a vehicle for carrying instruments to 100-mile altitudes and the techniques required for recovery of information obtained on the flights. Following an outline of structural design and flight performance of the missile, a detailed description is presented of ballistic tracking procedures and trajectories, power sources and circuits, telemetering equipment, and data recording and recovery.

Physical Characteristics of the Rocket

Rocket Performance

The V-2 rocket, whose dimensions and components are indicated in Fig. 1, was designed and produced in Germany during the war and has been modified in this country for research purposes. It has a total length of 46 feet 11 inches and is 5 feet 5 inches in diameter. The extreme diameter of the fins is 11 feet 8 inches. The total weight is about 9,000 pounds unloaded and about 14 tons loaded.

The rocket is powered by a jet motor using alcohol for fuel and liquid oxygen as the oxidizer. Over 19,000 pounds of fuel and oxidizer are used, which allow the motor to operate for about 60 seconds. The pressure in the combustion chamber is about 15 atmospheres at 2000°C and the gas exit velocity is of the order of 6,560 ft/sec, giving a thrust of 28 tons. A steam turbine drives the fuel and oxidizer pumps, the steam being generated by the reaction of hydrogen peroxide and sodium permanganate.

The thrust produces an acceleration of 6g and a velocity of about 5000 ft/sec just before fuel burn-out, which occurs at a height of about 100,000 feet. Altitudes between 65 and 114 miles have been attained with flight times of about 8 minutes. Thus, periods of four to five minutes have been spent above the heights reached previously by sounding balloons. Illustrative trajectories are shown in Figs. 2 and 3.

Launching Procedures

The V-2 is a self-launching rocket requiring no propelling charge or booster to lift it from the ground. The launching stand is merely a platform on which the rocket rests before the motor is set in operation. As a safety precaution, the rocket is not fueled until it is on the stand and ready to be fired.

A block house, with reinforced concrete walls 15 inches thick, is located 1000 feet from the launching equipment to shelter personnel during launching. The block house is the control center for the entire launching operation. Starting circuits for the rocket motor and for the warhead instrumentation terminate in the block house. Communication is maintained between the block house and all observing and recording stations located at various points in the Proving Ground.

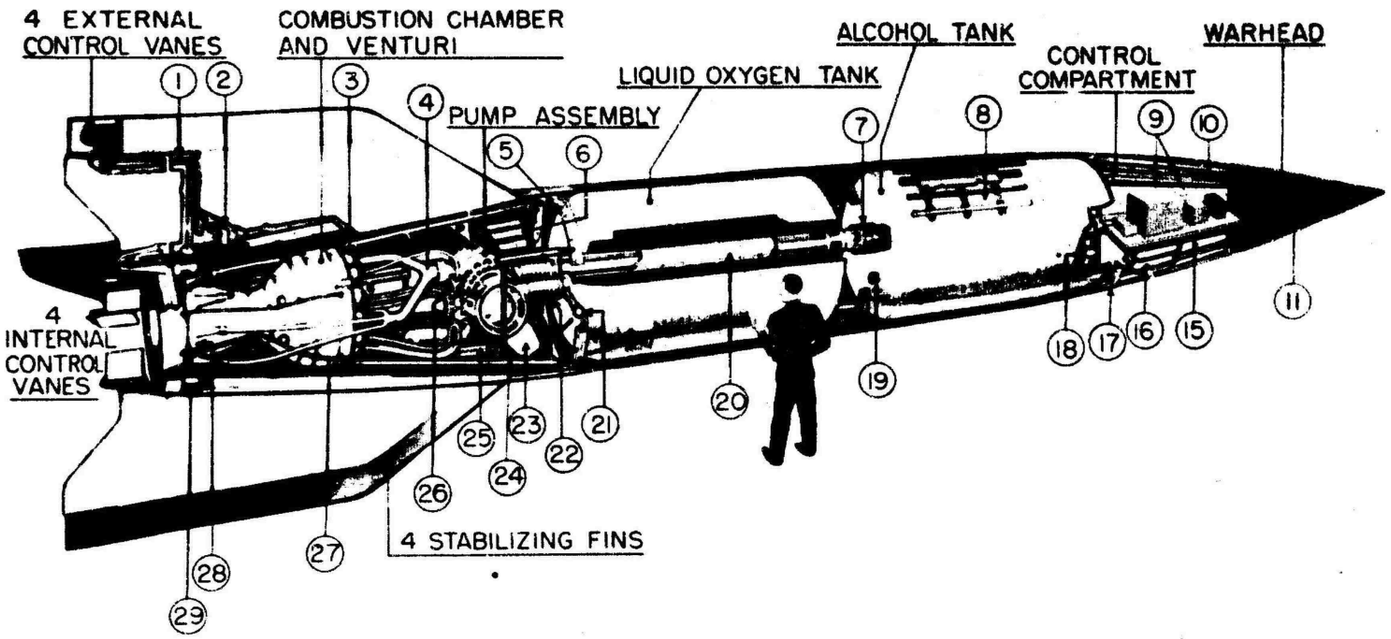

V-2 ROCKET SECTIONAL DRAWING

An officially prepared sectional drawing of the German V-2 rocket projectile. The drawn figure gives an idea of the size of the weapon, which is approximately 46 feet long and 5 feet, 6 inches in diameter.

KEY TO ANNOTATIONS

1. Chain drive to external control vanes
2. Electric motor
3. Burner cups
4. Alcohol supply from pump
5. Rear joint ring and strong point for transport
6. Air bottles
7. Servo-operated alcohol outlet valve
8. Rocket shell construction
9. Doppler telemetering equipment
10. Pipe leading from alcohol tank to warhead
11. Space for scientific instrumentation
15. Plywood frame
16. Nitrogen bottles
17. Front joint ring and strong point to pump
18. Pitch and azimuth gyros
19. Alcohol filling point
20. Double walled alcohol delivery pipe to pump
21. Oxygen filling point
22. Concertina connections
23. Hydrogen peroxide tank
24. Tubular frame holding turbine and pump assembly
25. Permanganate tank(gas generator unit behind this tank)
26. Oxygen distribution from pump
27. Alcohol pipes for subsidiary cooling
28. Alcohol inlet to double wall
29. Electro-hydraulic servo motors

FIG. 1 V-2 Assembly

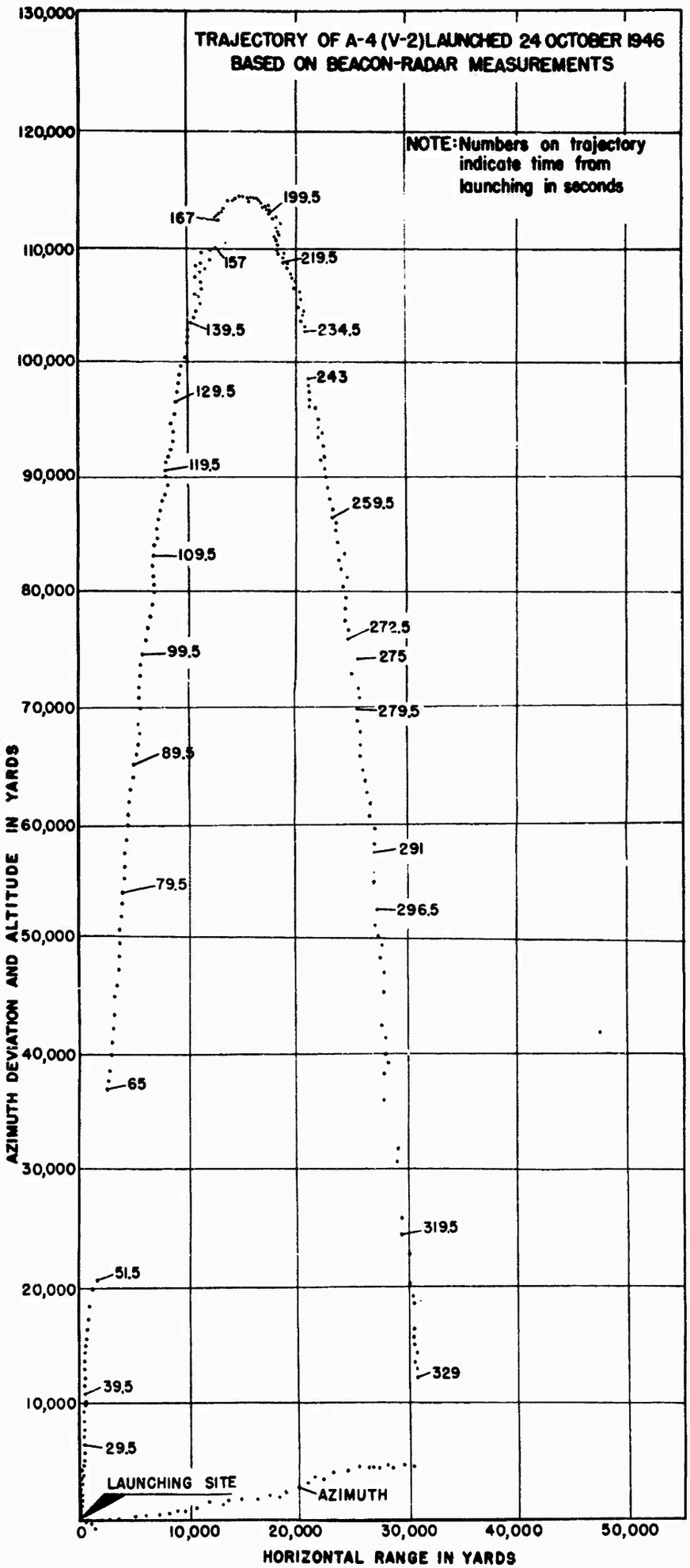

FIG. 2 Trajectory of A-4 Launched 24 October 1946

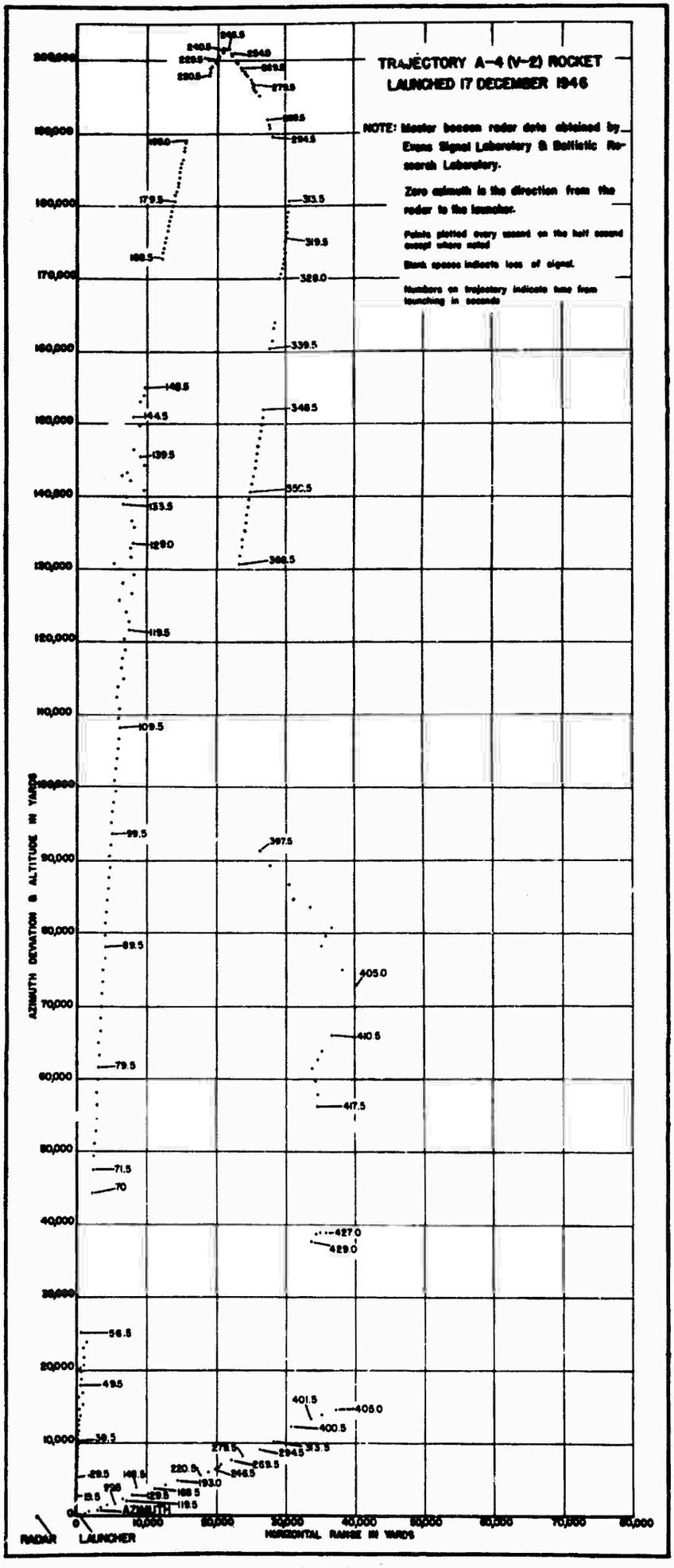

FIG. 3 Trajectory of A-4 (V-2) Rocket Launched 17 December 1946

Trajectory Control

The trajectory of the V-2 is controlled by a stabilizing mechanism in the rocket and limited if necessary by a remote control fuel cut-off system. Fuel cut-off is effected when a multiple channel radio receiver in the V-2 receives the proper command. This system has been used on certain flights when the V-2 did not follow a safe trajectory. Radar plotting boards and "sky screens" are used to determine the necessity for fuel-cut-off.

The stabilization system installed in the rocket consists essentially of pre-set gyro orientors and servo mechanisms for the operation of exterior control vanes and for carbon control rudders placed in the exhaust jet. The desired trajectory is determined before the flight and the gyros are set accordingly.

Modifications of the Rocket for Scientific Use

The V-2 Warhead

The portion of the V-2 rocket most useful for scientific research purposes is the warhead where space is available for instrumentation. Warheads for the V-2's have been designed by the Naval Research Laboratory especially for scientific use and are manufactured by the Naval Gun Factory for all participating groups.

The warhead consists of a nose section made in two parts, and a main body. The main body is of cast steel 3/8 inches thick and 57 inches long, with a base diameter of 37 5/8 inches. Access to the interior is by means of three gasketed ports. Two of these, located diametrically opposite each other and 16 3/4 inches above the base, are 15 x 17 inches. The third port, located at right angles to the others and 42 1/8 inches above the base plate, is 12 x 12 inches. The nose compartment, lying between the nose tip and the main body of the warhead, is 22 inches long, with a base diameter of 12.37 inches and with a 6 inch access port. The nose tip is 12 inches long with a base diameter of 3 inches. The warhead has an over-all length of 7 feet 6 inches and weighs 1055 pounds empty.

As originally supplied, the base plate of the warhead was welded in as an integral part of the warhead. Experience on the assembly of apparatus in an early flight indicated the desirability of separating the cone from the base so that apparatus might be built up on a frame over which the cone could be lowered. Later warheads were modified to have a separate base plate which is bolted to the cone after instrumentation is completed. In this manner, assembly and testing is greatly facilitated and no design limitations based on access port size are imposed.

The V-2 warhead has available 19.6 cubic feet of space for scientific instrumentation. To make optimum use of this space requires careful design and placement of equipment, and has resulted in the use of a "pyramid" frame with compartments into which are fitted the various electronic units with the smaller and lighter units near the top. Bulkheads constructed inside the two opposite access ports are used for holding the Geiger tube telescopes, with two of the tubes outside the bulkhead and, except for a shielding cover of one-quarter inch plywood, the ports are exposed to the atmosphere.

Equipment is built on chasses fabricated from 1/8-inch steel plate with 1/8-inch end support plates on which connector plugs are mounted. The chasses slide into the compartments in the pyramid and are secured by spring clips. Connector plugs are used throughout to provide a quick and easy method of assembly and testing. All ground connections are carried by wires rather than by the body of the warhead.

Additional Space for Experimental Equipment

From time to time some space in the aft section of the rocket has been made available for instrumentation. High temperatures and vibration are encountered due to the proximity of the motor; however, the possibilities for recovery of equipment installed here have proved to be relatively good.

Additional space is available in one quadrant of the control compartment. This space, unpressurized and lying immediately aft of the warhead, is 4 feet 7 inches long and has base diameters of 37 5/8 inches and 54 1/2 inches. It is useful for housing such instruments as cameras, recorders and timers. Other quadrants in the control compartment contain the telemetering transmitter, the emergency cut-off receiver, the Doppler tracking unit, and rocket control equipment.

Factors to be Considered in V-2 Experimentation

The V-2 constitutes an exceptional vehicle for carrying instruments to much greater altitudes than have ever before been reached. Its use, however, also introduces unusual and exacting circumstances under which the experimentation must be performed. The following paragraphs contain a discussion of some of the more important of these conditions, and of the general techniques used to insure operation during the flight of the V-2. Specific problems will be treated in more detail in later sections of this chapter.

1. All equipment fired in the V-2 is affected by the acceleration of the missile. The maximum acceleration due to propulsion is 6g, and the equipment has been designed to operate under this condition. It has been estimated that the rocket undergoes a 17g lateral acceleration toward the end of the flight due to vibration. A shake table and a centrifuge have been used to study the operation of equipment under various accelerations.

2. Another situation encountered in experimentation at high altitudes is the breakdown of air as an insulator at low pressures. The solution of this problem has been to maintain the interior of the warhead at atmospheric pressure by means of gaskets on the warhead base and doors. Cable connections are brought through the warhead base by means of pressurized receptacles and plugs, which are covered by brass cylinders and packing glands to form an airtight seal on the cable. Recorder leads, for example, carry high voltage pulses and are protected in this manner. Telemetering leads and control circuit leads operating at low potential do not require this special treatment. It is not considered necessary to pressurize the top section of the warhead where such equipment as the solar spectrograph is operated.

3. It has been calculated that the maximum skin temperature encountered in the warhead will be at the nose tip and may be of the order to 500° to 600°C. Due to the high heat capacity of the rocket and to the relatively short time in which the rocket encounters appreciable air friction, it appears that the temperature rise in the warhead is not great and that no special precautions are needed to insure operation of electronic equipment. It was noted that the paint on the outside of the rocket fired July 30, 1946 was only slightly blistered, indicating relatively moderate skin temperatures in flight. The Geiger tubes used in the flights have been tested for reliable operation at various temperatures. It has been found that they will operate successfully at temperatures as high as 100°C and as low as 10°C, a range that exceeds all temperatures to be expected in flight.

4. Recovery of data has been an important phase of the V-2 program. Two parallel methods have been used, one being telemetering and the other physical recovery of recorders within the rocket.

   An additional problem of importance is that of determining the operability of equipment during flight so that the data obtained may be interpreted correctly, and so that any portions of the instrumentation which fail in flight may be redesigned as required. A method of calibrating the Geiger counters during the flight by periodically exposing them to Beta particle radiation from a radioactive phosphorus source has been used to establish the operation of the counters as well as the electronic circuits.

   The radioactive Phosphorus (P^{32}) used in this experiment was supplied by the Monsanto Chemical Company, Clinton Laboratories, Oak Ridge, Tennessee and obtained on allocation from the U. S. Atomic Energy Commission.

5. Weight allowances for instrumentation are not critical. It is necessary due to stability considerations, however, to have the total weight of the loaded warhead in the neighborhood of 2200 pounds. Lead counterweights are added as needed to bring the gross weight to within several hundred pounds of this figure. The location of the center of gravity of the warhead is not critical and particular consideration need not be given to this factor in designing the instrumentation.

6. The position of the rocket in flight is important. Roll is to be expected, and has been induced on some flights to increase stability. The resultant period of roll has varied within the range of 6 to 40 seconds. Tumbling in flight, with a period of about 50 seconds, is typical after burnout.

7. The maximum time available for obtaining data is of importance in planning V-2 experiments and is limited by the missile's short flight time. The usable time is reduced by warhead blow-off, a technique used to separate the V-2 into two aerodynamically unstable parts in order to lower the terminal velocity of the missile and to facilitate recovery. No data is secured after separation of the warhead from the main body. The time of flight from launching to blow-off has been set at 5.5 minutes, by which time the missile is over the peak of the trajectory on a flight to an altitude of 100 miles and yet is above the ground on a short flight to a 60-mile height.

Tracking and Reduction of Ballistic Data

Tracking of the V-2 rockets and reduction of trajectory data is conducted by the Ballistic Research Laboratory of the Aberdeen Proving Ground, the Signal Corps, and the New Mexico College of Agriculture and Mechanic Arts. Measurements made by BRL include position, velocity, and acceleration as functions of time, aspect, point of impact, and time of flight. BRL also provides time signals on both wire and radio communication channels for use by the various observers in coordinating measurements with the trajectory data. Radar, radio, photographic, and visual equipment are used in making trajectory measurements.

Radar Units

A beacon-radar system used to obtain the complete trajectory, consists of the SCR-584 radar assisted by a modified M-19 beacon in the missile. Two plotting boards are used in conjunction with the beacon-radar, one giving vertical height vs. horizontal distance from the radar set, and the other horizontal range vs. azimuth in a polar plot. Time is shown on both plots as dots occurring at one-half second intervals. The plotting board data has sufficient accuracy to locate the missile within a 100 yard sphere.[5] Location of the missile to within 30 yards range and within one or two mils in azimuth and elevation is obtained from photographic records of a data box showing azimuth and elevation dials and a remote 2,000-yard range oscilloscope.

If the beacon in the missile malfunctions, no record is produced in the main radar station described above. A secondary radar station does not use the beacon and is provided primarily for short-range information, within 40,000 yards. This station employs photographic recording only.

[5] All figures of accuracy given in this section are based on successful operation of the instruments under good operating conditions.

Radio doppler equipment is used for determining the position and the velocity of the missile with respect to time. A one-kilowatt transmitter beams continuous wave radiation along the trajectory of the V-2. This signal is received by four ground stations and by a receiver located in the missile. The airborne receiver amplifies the signal, doubles the frequency and feeds the higher frequency signal to a 10-watt transmitter. The four ground stations receive the high frequency signal and mix it with the signal received directly from the ground transmitter after this low-frequency signal has also been doubled. The beat, or doppler frequency, is transmitted to a central recording station and from the data recorded, the distance to the rocket from each of the receiving stations may be calculated. The position of the rocket is then determined by triangulation. Each quantity taken separately is accurate within 3 meters. The slant range can be determined with an accuracy of the same order, and when the distance of the missile is large compared with the distance between the receiving stations, the error in azimuth is about one-tenth mil and that of the quadrant elevation is (1/10 sine e), where e is the angle above the horizon.

Optical Instruments

Optical instruments used for obtaining such trajectory data as position, velocity, acceleration, and aspect include the following: (a) Two Bowen-Knapp cameras, (b) two Mitchell phototheodolites, (c) two Askania phototheodolites, (d) two ballistic cameras, and (e) one telescope with recording camera.

The Bowen-Knapp cameras, operating at 30 frames per second, are used to record the first 8000 feet of the trajectory. The probable error in position is about 0.04 mils, while the error in aspect about 10 mils, and timing error is about 50 microseconds.

The Mitchell phototheodolites secure data during the first 100,000 feet of the trajectory, and are run at 10 frames per second. Positional accuracy is obtained to a probable error of 0.4 mils and the timing accuracy is of the order of 1/300 second.

The Askania phototheodolites observe the first 100,000 feet of the trajectory or more, being operated at a rate of 3.3 frames per second. Positional accuracy is about 0.2 mils, and timing accuracy is around 1/800 second.

The quadrant-type ballistic cameras record the position of the rocket between 30,000 and 70,000 feet. Probable error in position is 0.04 mils and timing is accurate to 1/1000 second.

The telescope with recording motion picture camera is primarily used for observation of the aspect of the missile during its flight in the upper atmosphere. A 4.5-inch refracting telescope of 60 inches prime focus has been used. By means of an amplifying lens, an image is recorded by a 35mm motion picture camera with the scale of the photograph being 1 mm to 1/3 of a minute of arc. The telescope is located on a motor driven mount and trained with 20X binoculars. Exposures may be made at the rate of 16 to 32 frames per second. The probable error in yaw measurements at 250,000 feet is about 4 mils.

The master time signal is impressed on each of the tracking instruments. This signal, initiated by the rocket at the instant it leaves the launcher, originates in the block house and is derived from an 80 kilocycle crystal

oscillator accurate to one part in 50,000.

In general the tracking data have been adequate for all experiments performed by APL to date; precise measurements of the trajectory data have not been required. In the instances where radar data have not been available, a parabolic trajectory has been assumed after fuel burn-out. Checks have been made using this method of plotting the high altitude trajectory on flights where the radar data are available, and the calculated and experimental trajectory curves agree.

The radar tracking has lost the beacon signal at times, one cause for this being attenuation by the ionized exhaust gases while the motor is operating. On the April 8, 1947 flight, for the first time, the beacon signal was received every half-second from launching to fuel cut-off. The loss of beacon signal toward the end of flight is believed to have been due to the tumbling of the rocket. No beacon-radar tracking was obtained on the April 1, 1947 flight since the beacon could not be turned on prior to launching.

The phototheodolite measurements have proved to be very reliable although cloud formations have, at times, obscured proper observation. The tracking data giving the orientation of the missile have not been adequate in many cases and special installations have been made by APL for in-flight operation. This equipment is described elsewhere in this report.

The trajectory data supplied by BRL is reproduced in Figs. 4 through 15. In the phototheodolite curves, the origin of the coordinates is taken to be the launching site. The positive X coordinate is north and the positive Z coordinate is east. The Y coordinate represents the vertical. The angle between the trajectory and the vertical is Ψ, while θ is the angle between the trajectory and the horizontal.

Summary of Altitudes Attained by APL V-2 Rockets

The following table summarizes the performance of rockets fired during the period of this report.

TABLE I

Missile No.	Date	Maximum Altitude in Miles
9	July 30, 1946	100
13	October 24, 1946	65
17	December 17, 1946	114
22	April 1, 1947	75
23	April 8, 1947	68

Power for V-2 Experiments

The source of power for operating instruments in the V-2 and the circuits required for its distribution are described in this section of the report.

Batteries

Primary power for operating the experimental equipment in the V-2 is obtained from a bank of 6-volt lead-acid storage batteries installed in the warhead. This source operates the electronic tube heaters and the generators

TRAJECTORY OF A-4 (V-2) ROCKET LAUNCHED 30 JULY 1946 BASED ON ASKANIA PHOTOTHEODOLITE MEASUREMENTS

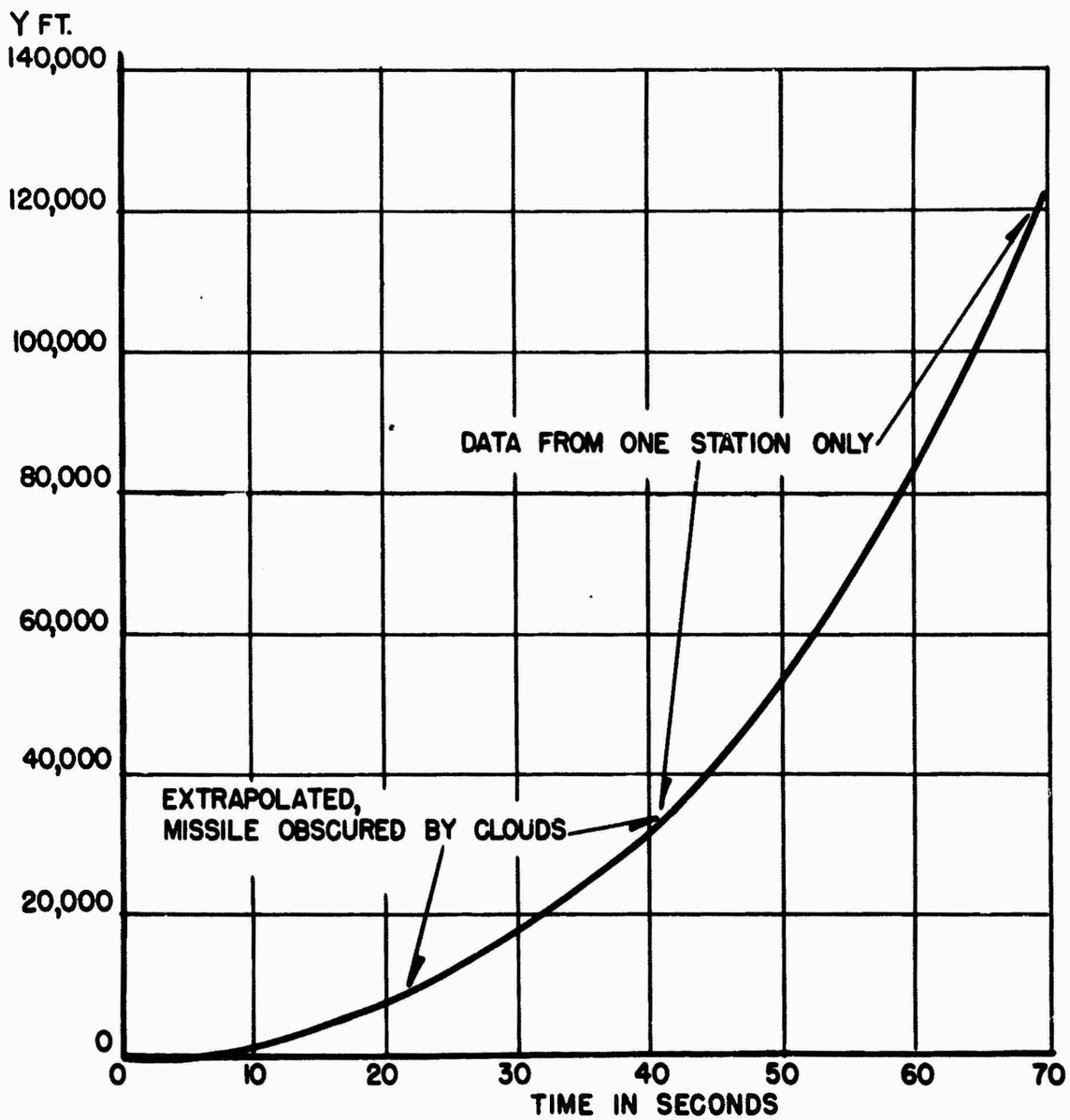

FIG. 4 Trajectory of A-4 (V-2) Rocket Launched 30 July 1946

TRAJECTORY OF A-4(V-2) ROCKET LAUNCHED 30 JULY 1946

BASED ON ASKANIA PHOTOTHEODOLITE POSITIONS AND TRAJECTORY ANGLE, DOPPLER RADIAL VELOCITIES, AND OBSERVED IMPACT RANGE.

A PARABOLIC PATH AFTER FUEL CUT-OFF ASSUMED.

TIME OF MAXIMUM VELOCITY	71 sec.
MAXIMUM VELOCITY	5152 ft./sec.
TRAJECTORY ANGLE FROM VERTICAL	11.3°
ALTITUDE AT 71 sec.	132,790 ft.
MAXIMUM ALTITUDE	100.4 miles
RANGE TO IMPACT	69.3 miles

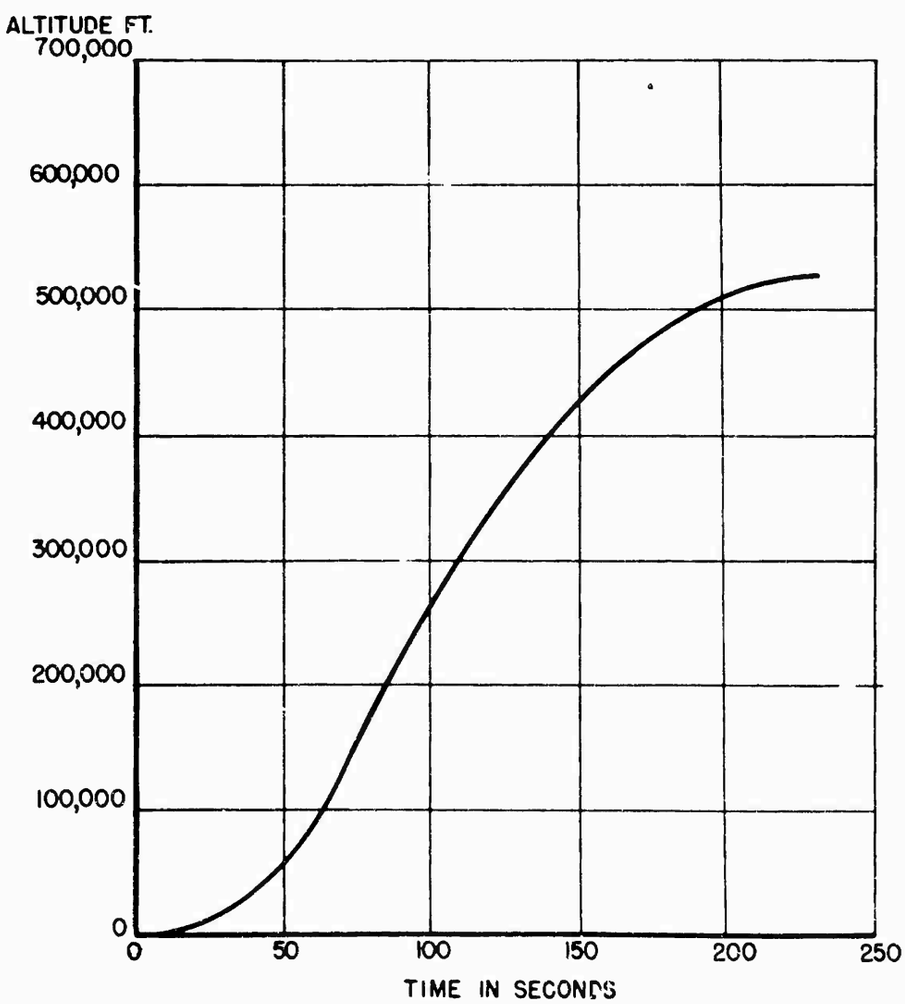

FIG. 5 Trajectory of A-4 (V-2) Rocket Launched 30 July 1946

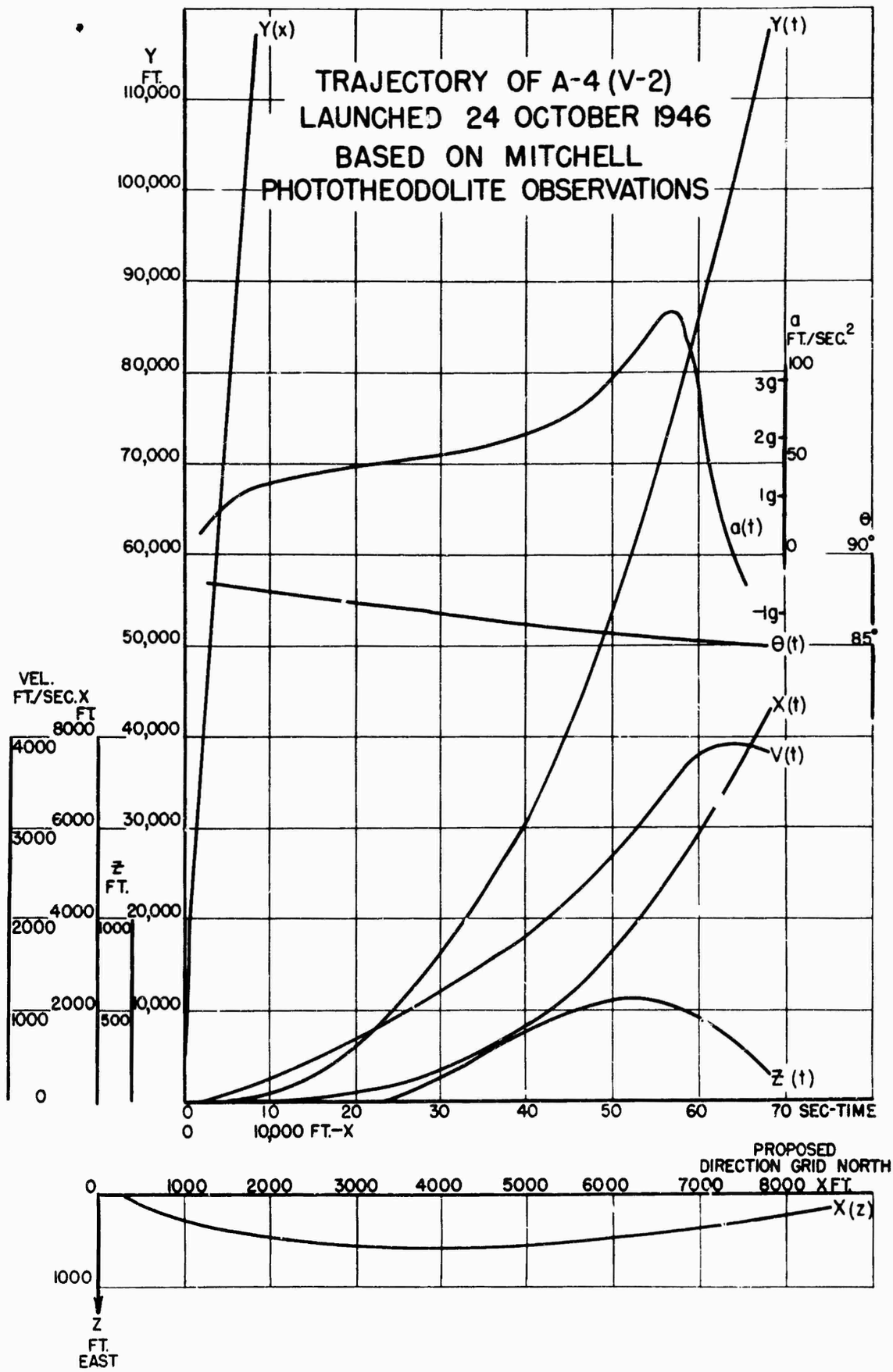

FIG. 6 Trajectory of A-4 (V-2) Rocket Launched 24 October 1946

TRAJECTORY OF A-4 (V-2) LAUNCHED 17 DECEMBER 1946
BASED ON MITCHELL PHOTOTHEODOLITE OBSERVATIONS

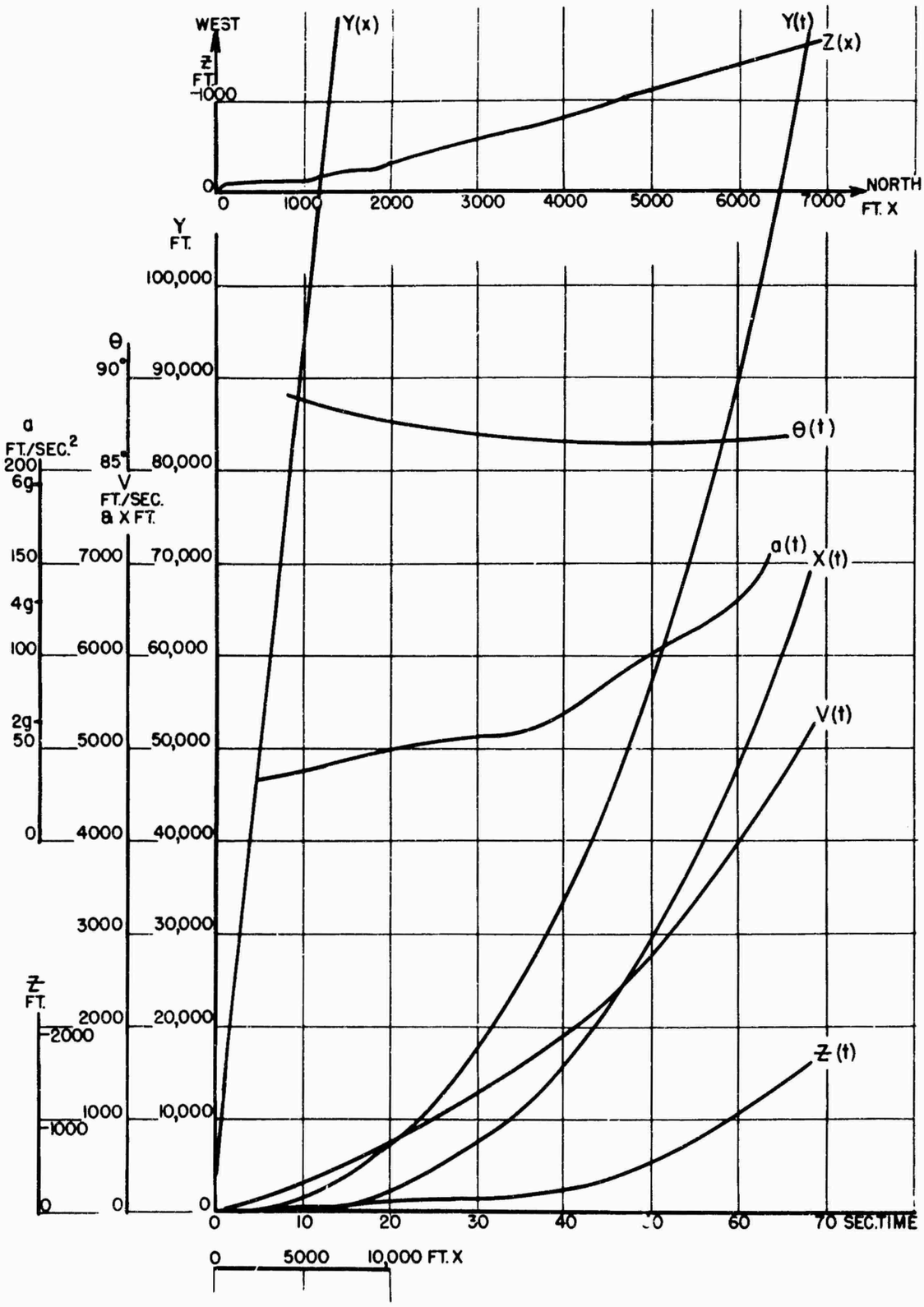

FIG. 7 Trajectory of A-4 (V-2) Rocket Launched 17 December 1946

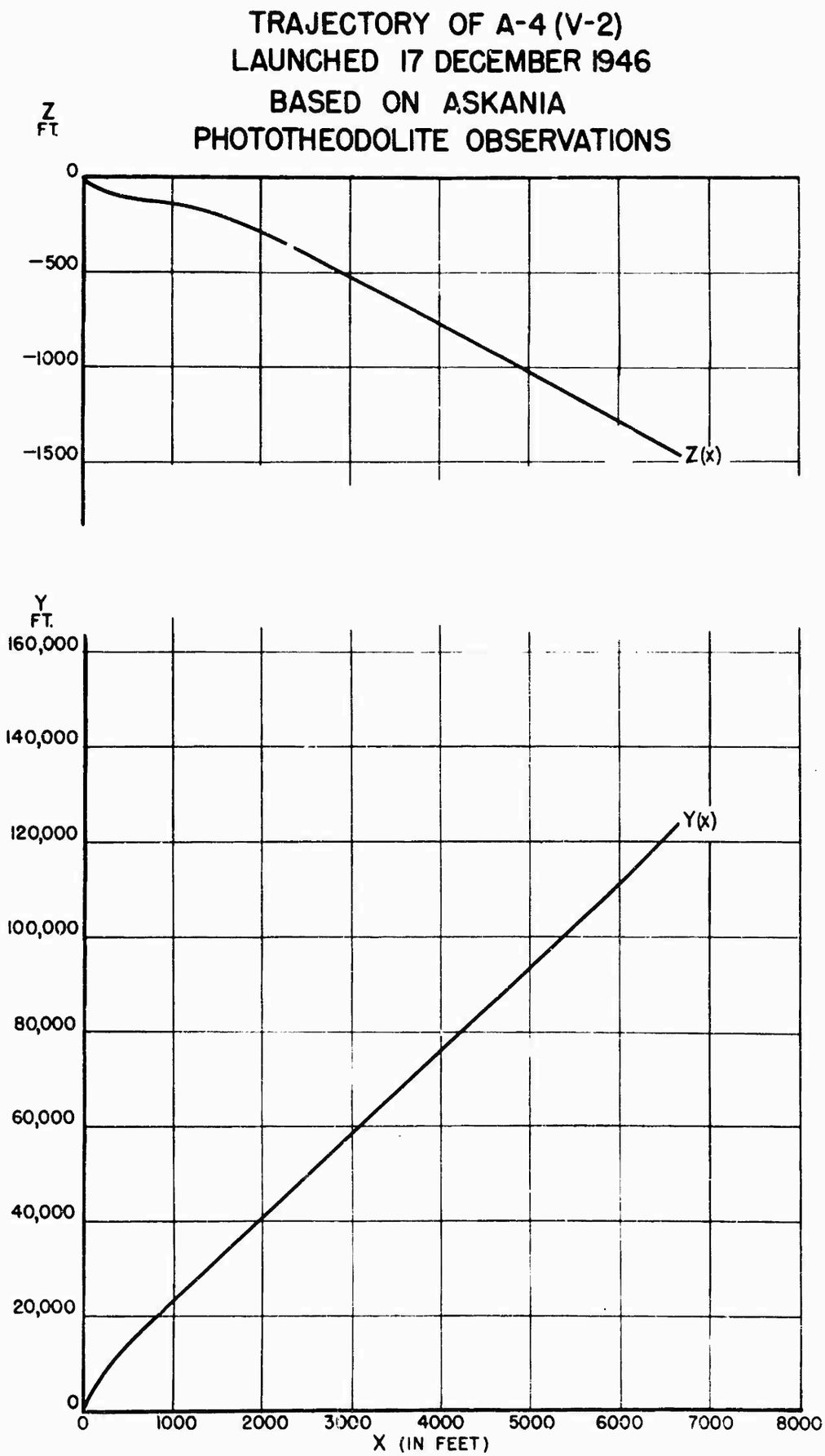

FIG. 8 Trajectory of A-4 (V-2) Rocket Launched 17 December 1946

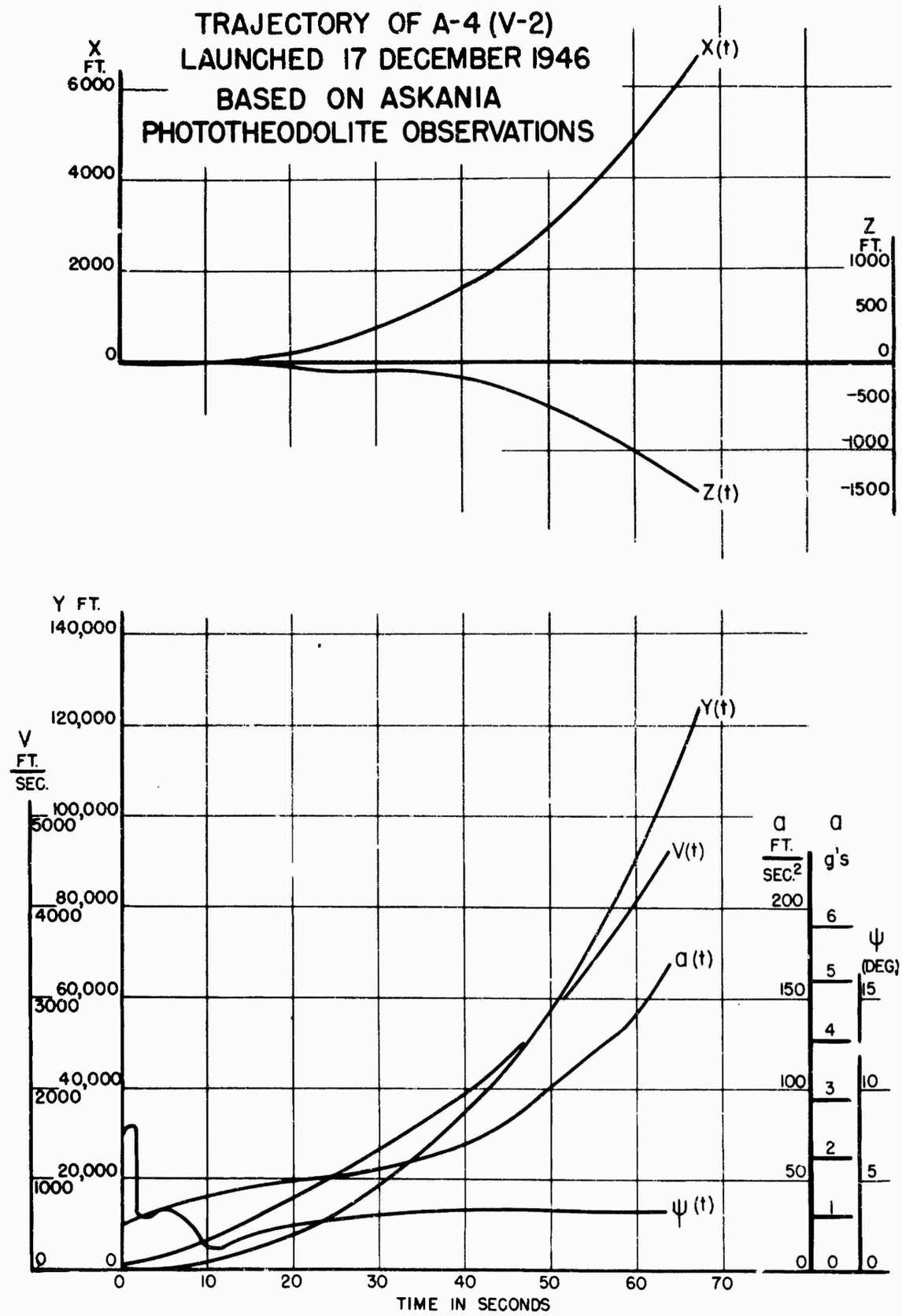

FIG. 9 Trajectory of A-4 (V-2) Rocket Launched 17 December 1946

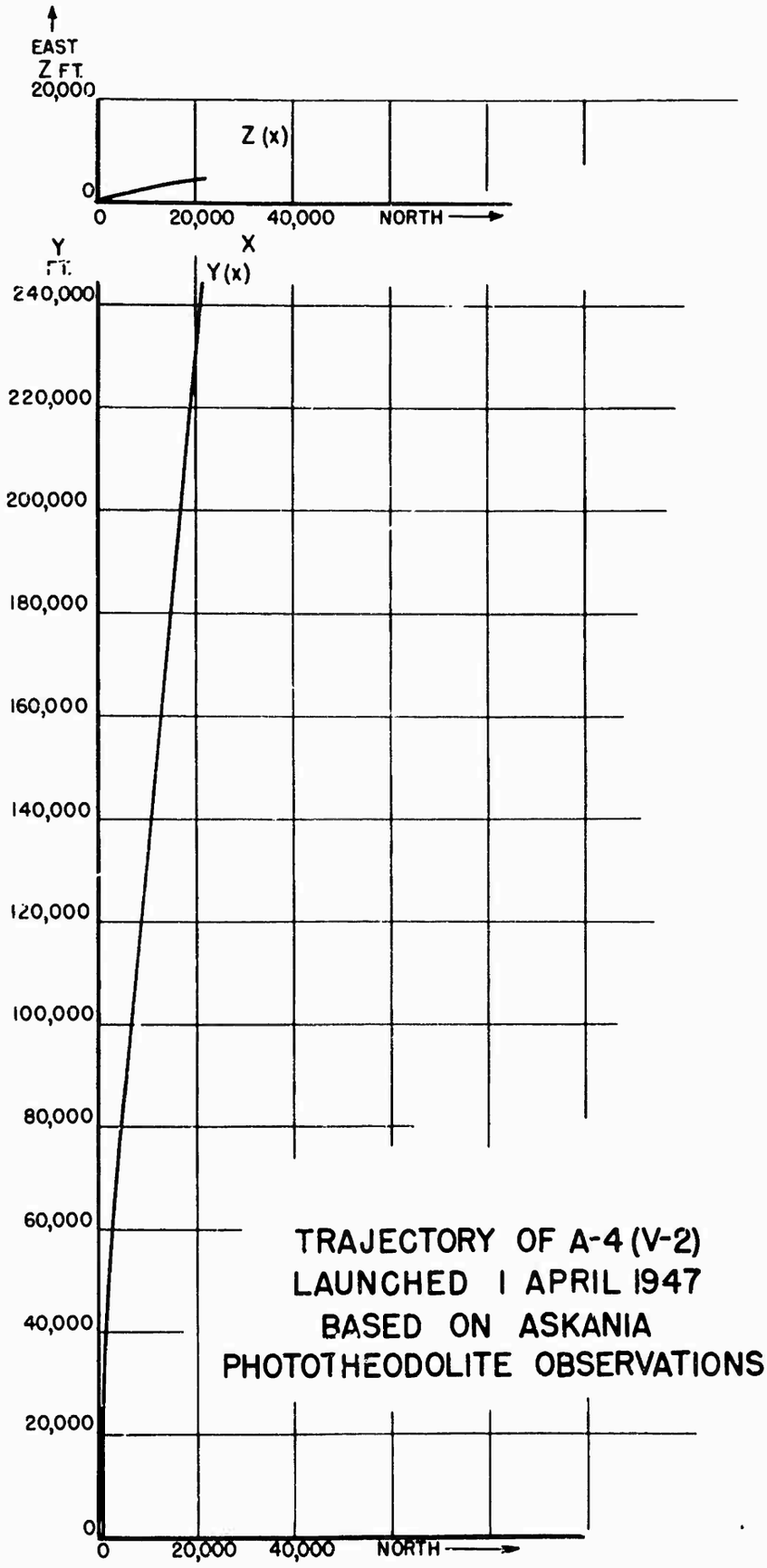

FIG. 10 Trajectory of A-4 (V-2) Rocket Launched 1 April 1947

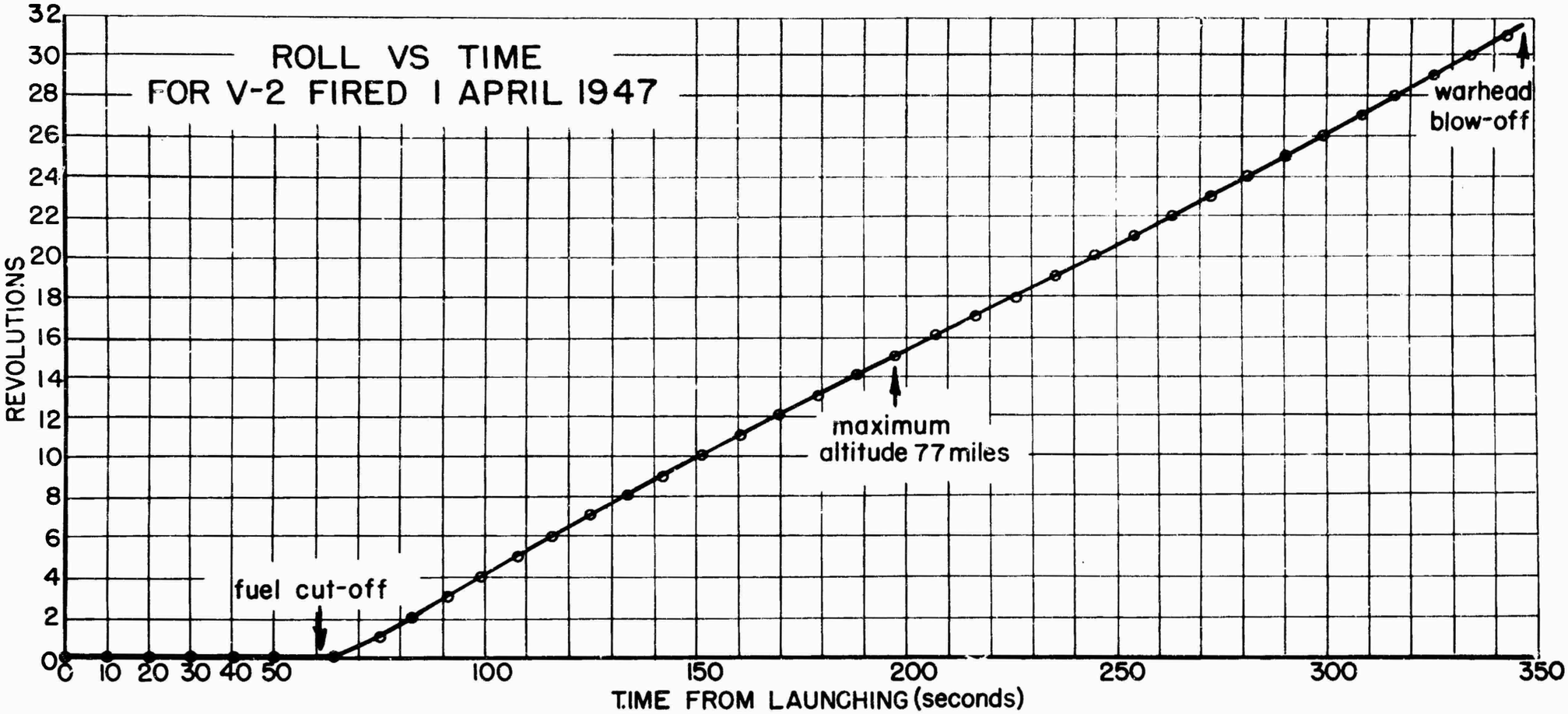

FIG. 11 Roll vs Time for V-2 fired 1 April 1947

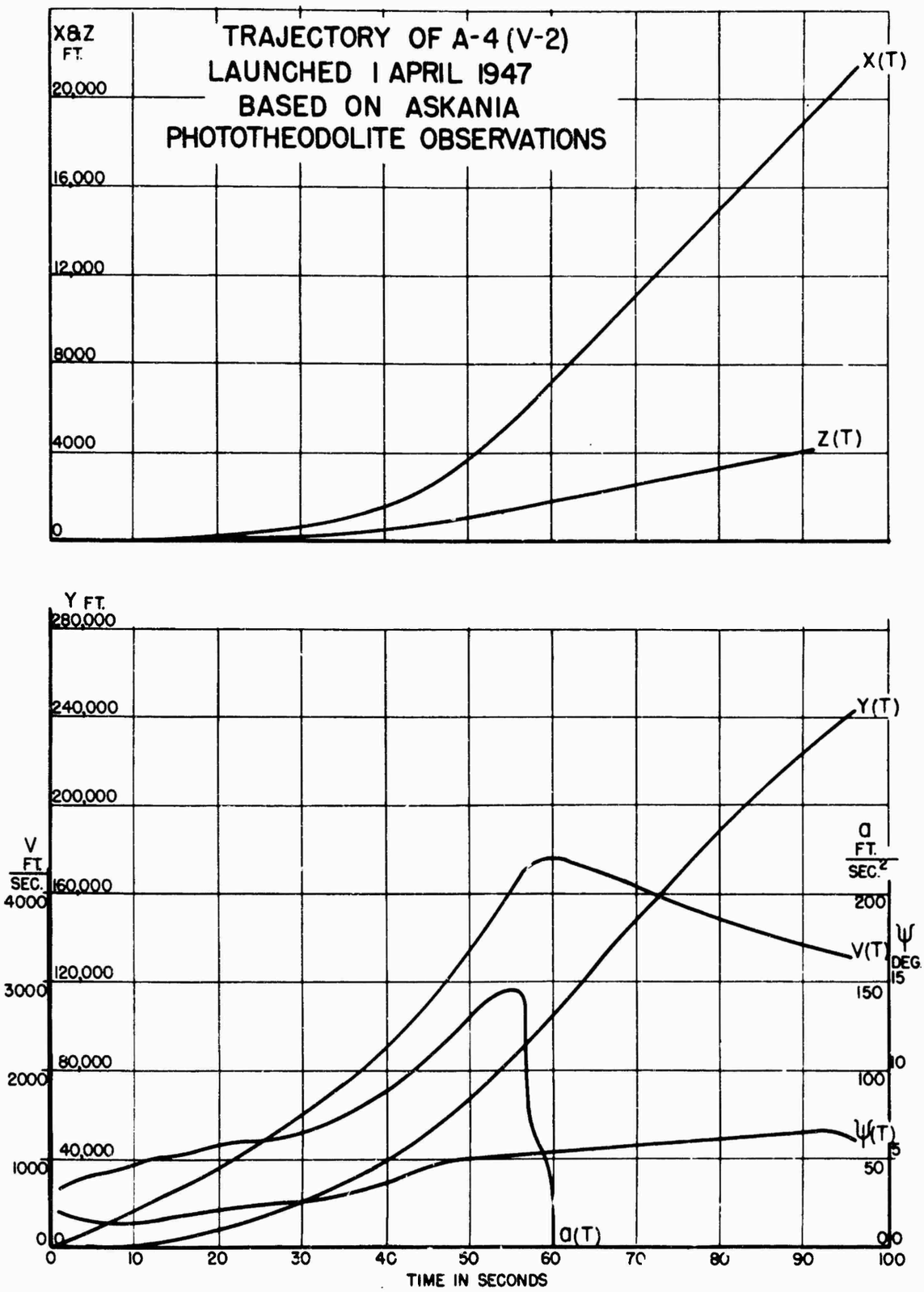

FIG. 12 Trajectory of A-4 (V-2) Rocket Launched 1 April 1947

TRAJECTORY OF A-4 (V-2) LAUNCHED 8 APRIL 1947 BASED ON MITCHELL PHOTOTHEODOLITE OBSERVATIONS

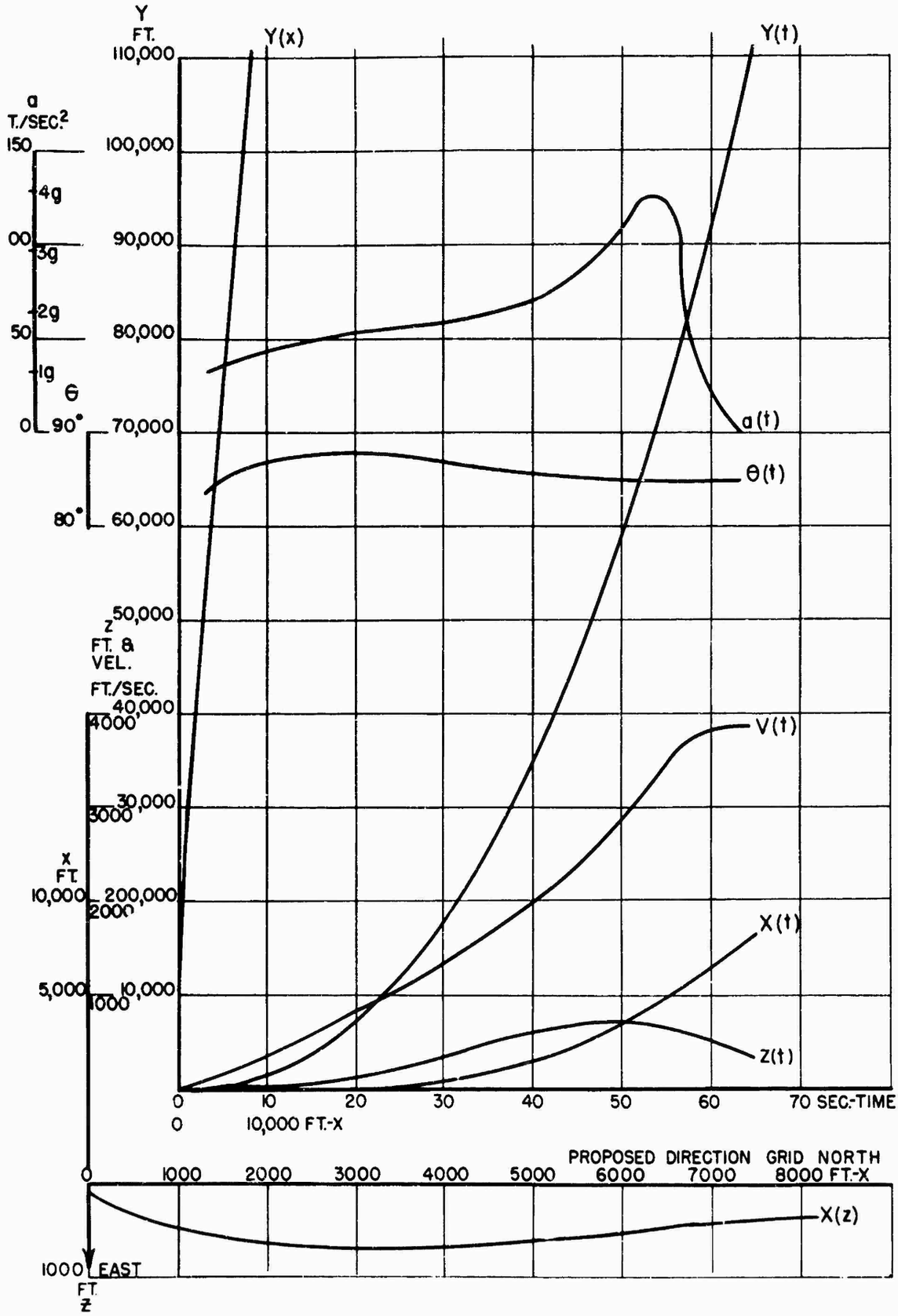

FIG. 13 Trajectory of A-4 (V-2) Rocket Launched 8 April 1947

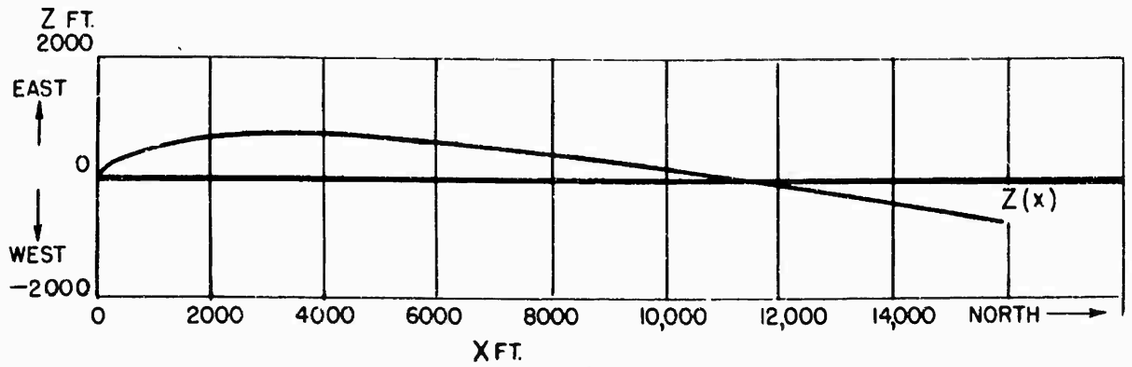

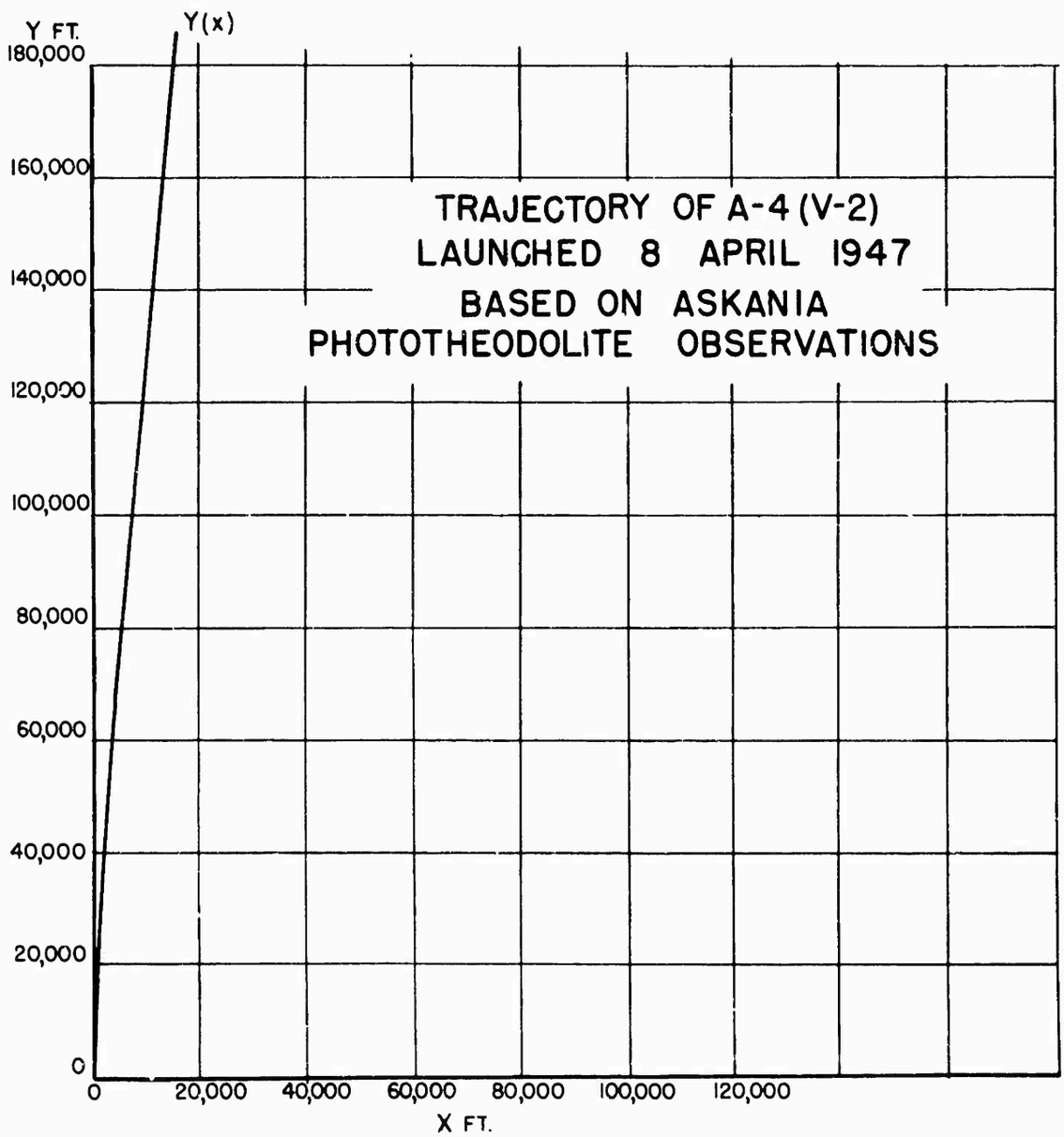

FIG. 14 Trajectory of A-4 (V-2) Rocket Launched 8 April 1947

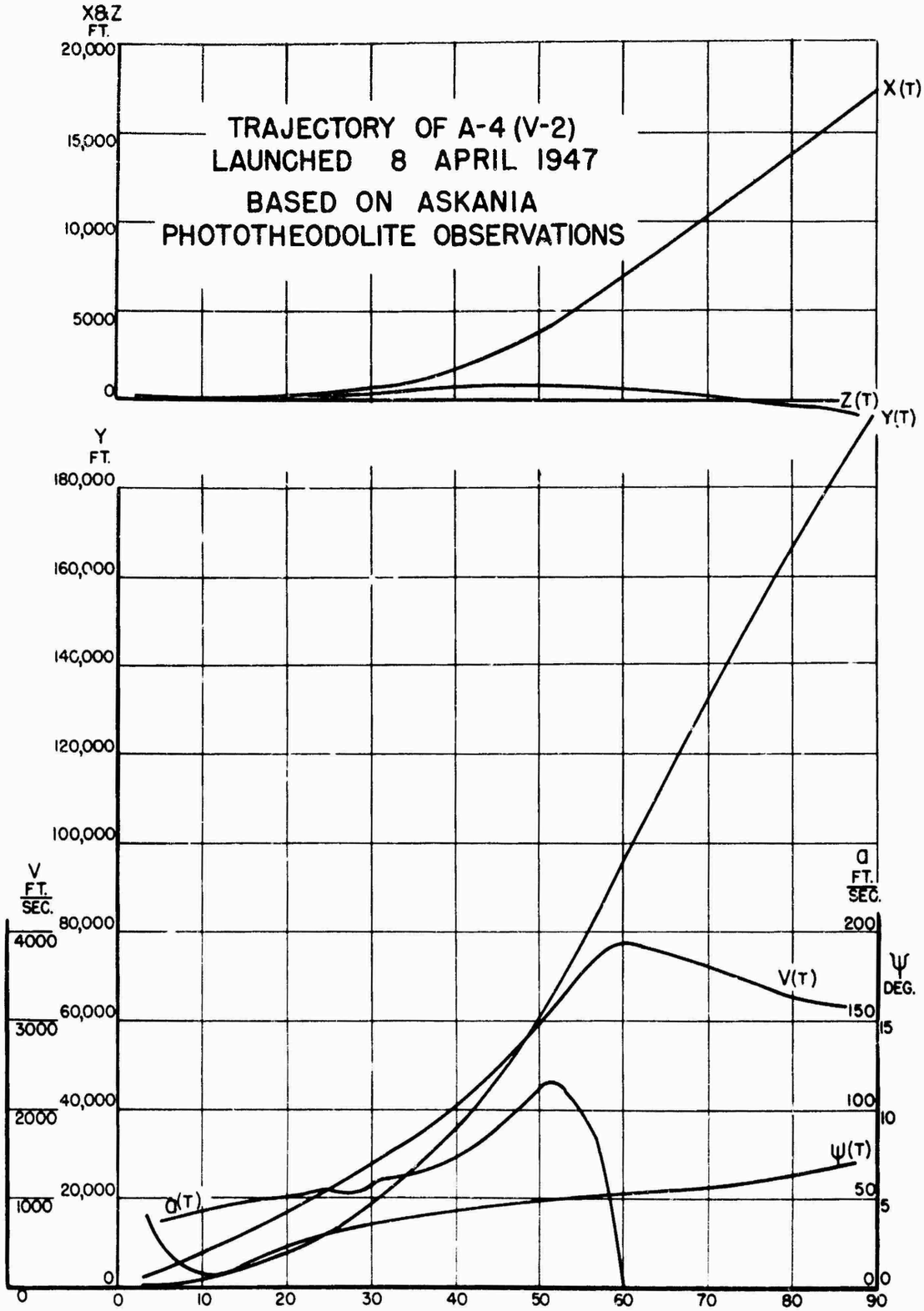

FIG. 15 Trajectory of A-4 (V-2) Rocket Launched 8 April 1947

supplying electronic tube plate and screen current. A 24-volt lead-acid battery supply operates various auxiliary circuits such as timing motors and calibrators. A high-voltage source of about 1000 volts is supplied to the Geiger tubes from a special battery composed of a number of small 22.5-volt hearing-aid batteries set in wax, as shown in Fig. 16.

The lead-acid cells constituting the primary power supply are aircraft batteries of a non-spillable construction permitting operating in any orientation. About 50 amperes is needed to supply heater current and 60 amperes is required to operate the DC generators furnishing plate voltage. The batteries, shown in Fig. 17, are capable of supplying this current for a period of 20 minutes,

Four values of voltage are required for the various electronic plate and screen circuits and are provided by the above generators which are capable of delivering 355 volts at 150 milliamperes. Voltages used in most experiments are 67.5, 135, 200, and 250. Separate generators supply each potential, and dropping resistors reduce the 355 volts to the required values. In order to reduce the dissipation in the dropping resistors and cut down battery drain, the generators supplying 67.5 and 135 volts are operated with an input voltage of 4 volts. Radio frequency and ripple filters are provided in the output circuit of each generator.

These four voltages together with the 6-volt supply and a 24-volt supply are fed to a junction box which has a number of output plugs whereby voltages are supplied to each unit of the experiment using a standard plug and cable arrangement. Dry batteries (22.5-volt) furnish bias voltages which are adjusted by a divider in each particular unit and decoupled by a suitable filter network.

Space considerations require that as few batteries as possible be used for the power supply. The result of an inadequate power supply is the probability of low filament voltage. Since the plate current in most of the tubes is of high value, the filament current must be maintained near the rated value to prevent large changes in tube characteristics. Laboratory tests indicate that the power supplies used are adequate to operate the equipment satisfactorily for a period considerably in excess of the required time of flight.

The same bank of batteries used on a flight is also used to power the equipment during laboratory and proving ground test periods. Provision is made for charging the batteries with a high current, "quick charge" battery charger which is also "floated" across the battery bank during the test use. This method has proved highly successful, removing the need for auxiliary test power supplies and attendant changeover switches, and assuring that flight operating potentials are the same as test conditions.

Control Circuit

A control circuit, Fig. 18, has been designed that permits part of the experimental equipment in the V-2 to be turned on from the block house just prior to the time of launching. The remainder is started automatically when the missile is launched. The circuit for remote control allows the electronic equipment to be warmed up before the flight starts and in addition permits a "ground record".

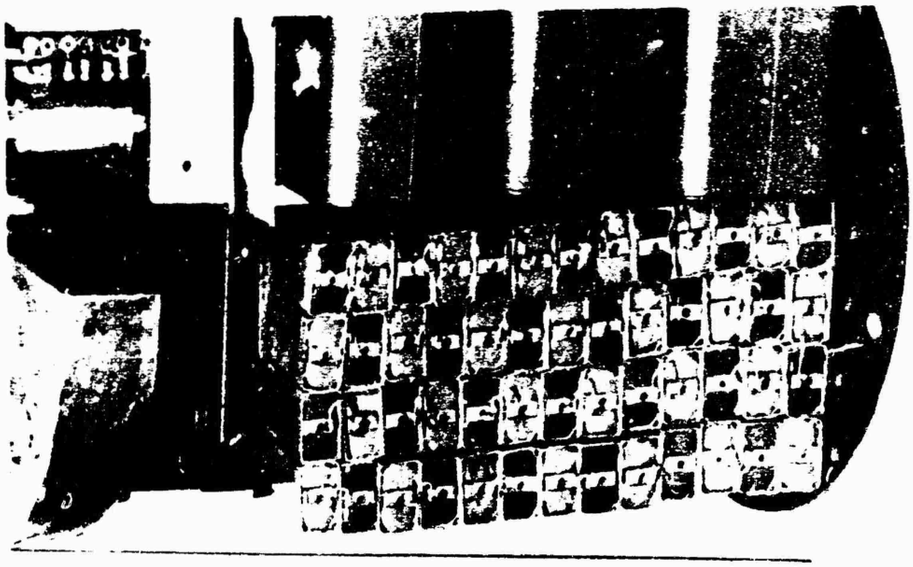

FIG. 16 Voltage Supply for Geiger tubes

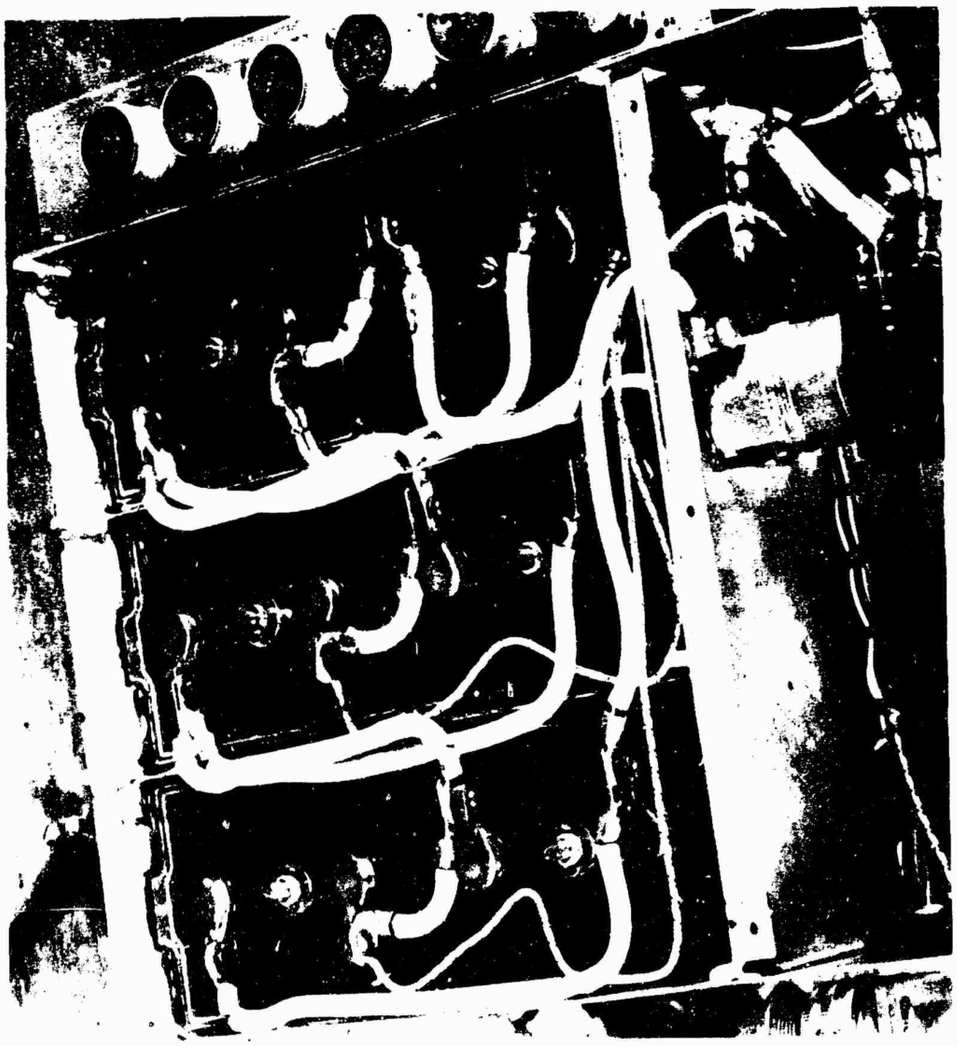

FIG. 17 Primary Power Supply Batteries

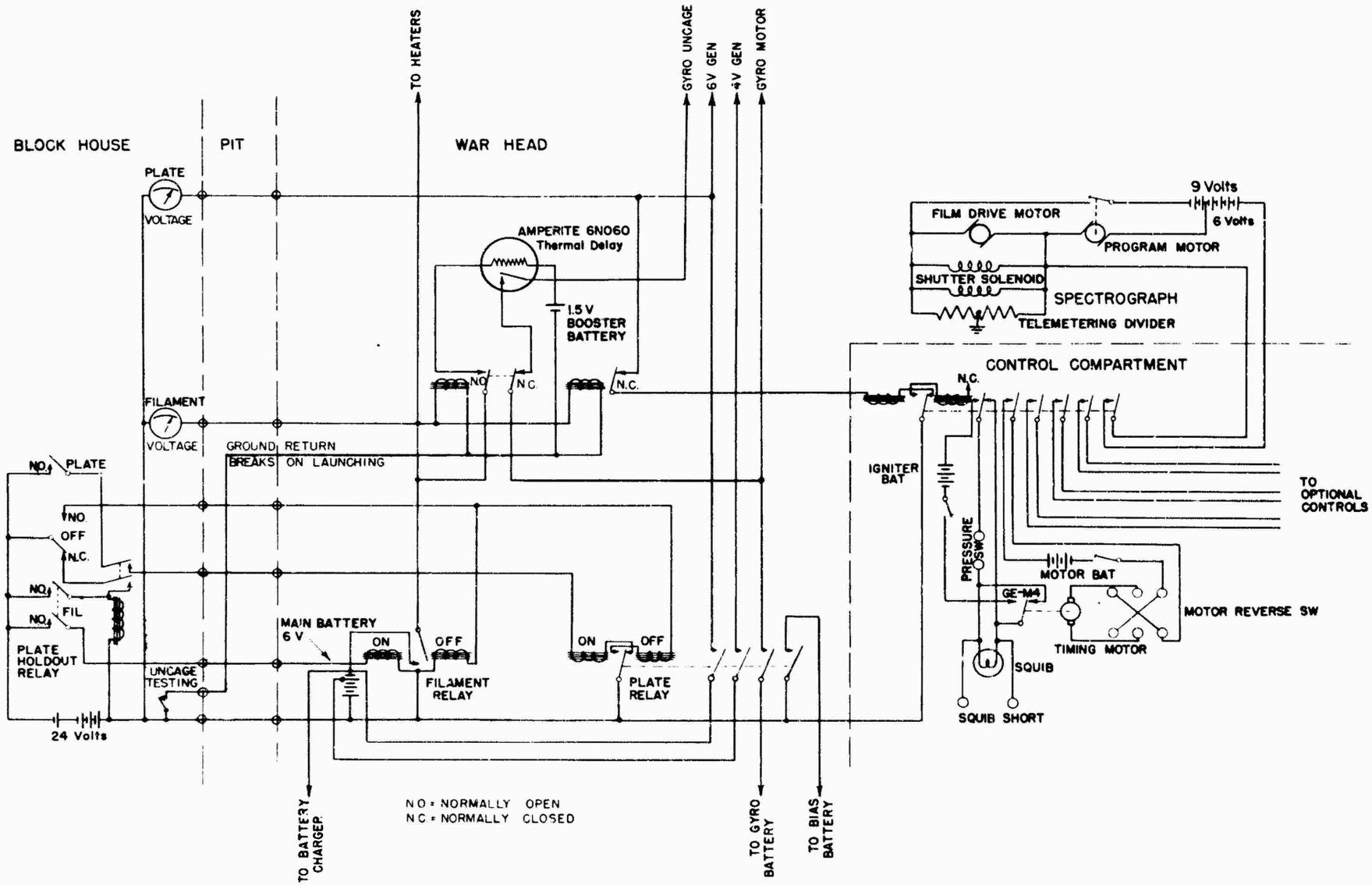

FIG. 18 V-2 Control Circuit

A typical control circuit is shown in Fig. 19. Push buttons in the block house control relay-operated switches in the warhead which apply heater voltage and plate voltage. A mechanical interlock in the block house prevents the plate supply from being turned on before the filament supply is on in order to allow filament warm-up. Filament voltage and the voltage to the plate-supply generators is monitored in the block house, allowing operati. personnel to determine that the power has actually been supplied to the equipment before the rocket is launched. The relay-operated switches installed in the warhead are of a rotary type that may be turned off as well as on, by means of the control box in the block house, thus permitting stopping the record in the event of a misfire or a delay in firing.

The filament relay has a contact capable of carrying 100 amperes and in the operating position has a small "holding current" through the coil in order to lock it against vibration. The plate-supply relay, also of the rotary type, has several decks and is used to connect several separate circuits simultaneously including the 6-volt and 4-volt supplies to the generators as well as bias and 24-volt batteries.

Voltage is applied to the gyros through the latter relay causing them to start rotating so that they may be up to speed and stabilized before the rocket takes off. A thermal delay has been incorporated in the gyro circuit to prevent uncaging of the gyros while the holding relays described below are being changed over to an armed position.

The spectrograph, warhead blow-off timer, and earth camera start operation automatically when the V-2 is launched. The ground return of a normally closed holding relay is made through a pull-out plug. This plug, indicated on the circuit diagram, is automatically disconnected when the rocket starts to move. When the ground return is broken, the control compartment switch which has been held open by the relay is closed, actuating the various circuits through independent contacts on the control compartment relay switch..

Telemetering

The problem of recording data was recognized early in the V-2 rocket program when a telemetering system designed by the Rocket Sonde Section of the Naval Research Laboratory was installed in the July 30, 1946 missile. Although physical recovery of recording devices after impact has . oved useful it has not been completely reliable, particularly in the early phases of the program. NRL telemetering service has been highly successful in recording many kinds of data, and much of the success of the research program has been due to this.

Upper Atmosphere Research Report No. 1[6] contains a complete description of the technical details of the system. Briefly, it is a time-modulated pulse system which delivers higher peak power at a lower average power consumption than a continuous carrier system. It operates at about 1000 megacycles, a frequency high enough to penetrate the ionosphere. The data voltages from experimental equipment are converted into time intervals defined by voltage

[6] TG-29, "High Altitude Research of the Applied Physics Laboratory," October 8, 1947.

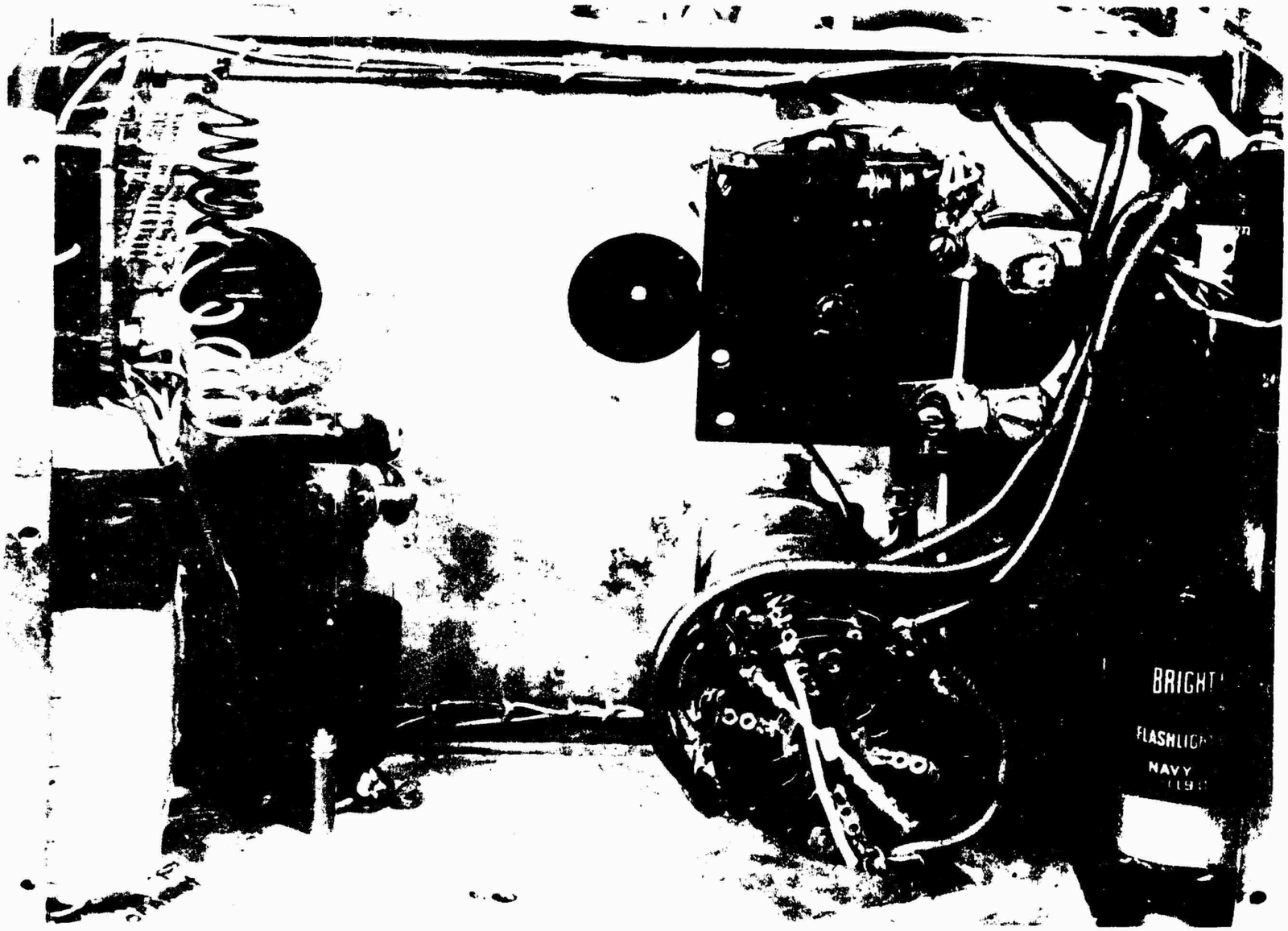

FIG. 19 Control Circuit Components

pulses. The data voltages are sampled in a specific order and are used to generate pulses, the time intervals between which correspond to the magnitude of the sampled data voltages. The intervals maintain the same time sequence as the sampled voltages, the pulse marking the end of one interval serving as the initial pulse of the succeeding interval. A complete sampling of all data voltages is taken periodically and used to form a group of time intervals which correspond in length to the magnitude of the sampled data voltages. The intervals maintain the same time sequence as the sampled voltages, the pulse marking the end of one interval serving as the initial pulse of the succeeding interval. A complete sampling of all data voltages is taken periodically and used to form a group of time intervals. A master keyer initiates the taking of each group of data at a uniform rate. The distinction between different groups is made possible by allowing for a sufficiently long time before the initial pulses of each group. For this reason, the interval between the last pulse of one group and the first of the next is made very much longer than any of the measured intervals.

The voltage pulses are transmitted from the rocket and received by ground stations which decode and record the data. Several methods of recording the data voltages are used, including a record on a moving strip of photographic paper made by Hathaway magnetic string oscillographs, and a motion picture record of the meter panel. A wire recording is made of the signal taken off before the decoder as a precaution against decoder failure. The master time signal is impressed on each of the various recording devices.

The over-all response of the telemetering system is very nearly linear. A careful determination of the departure from complete linearity is made for each channel prior to a flight. A typical example of the type calibration curve obtained is shown in Fig. 20. It will be noted that the per cent of maximum output voltage obtained for a given input voltage is plotted against the input voltage. During actual flight, two known voltages are periodically and alternately applied at the input of each channel requiring specific calibration. This provides two known points on the calibration curve. It is assumed that even though there may be a drift in the magnitude of the output for a given input, the form of the calibration curve remains unchanged. The over-all accuracy of the telemetering system, neglecting error introduced by the data gathering instruments, has been estimated by the Naval Research Laboratory to be roughly $\pm$ 5 per cent.

A 50-microsecond time interval is allowed for zero data voltage, and a 200-microsecond time interval for + 5-volt data voltage. Between cycles, 600 microseconds are allowed; thus, since there are in all 23 channels, the various data voltages are each sampled a maximum of 192 times per second. Since the response of the string galvanometers is adequate up to 1000 cps, the resolution is limited by the sampling rate.

It has been customary to assign 15 or 16 of the 23 channels to the agency responsible for the instrumentation for the particular flight. If the maximum rate of sampling is not required, mechanical subcommutation may be accomplished by a mechanical commutator. This procedure has been successfully used in taking the gyro measurements of the pitch and yaw of the rocket.

Figure 21 is a section of the NRL telemetering record and Fig. 20 the over-all calibration curve of one channel.

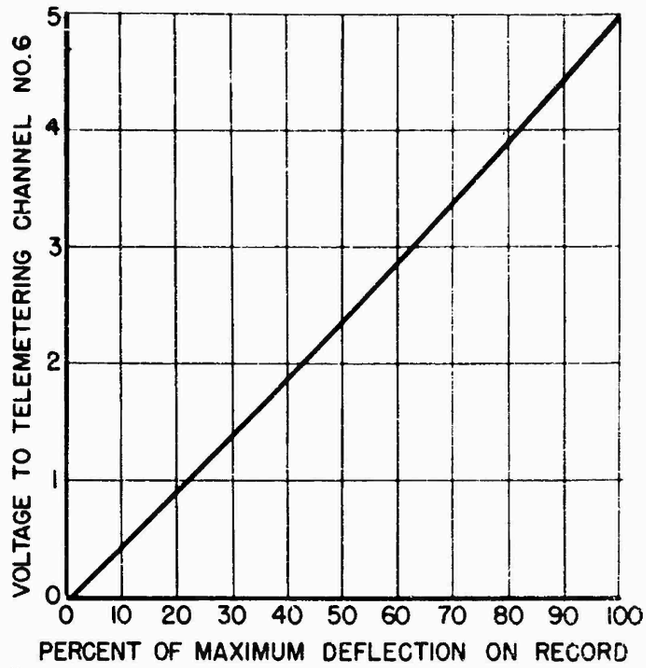

FIG. 20 Calibration Curve for Telemetering Channel No. 6

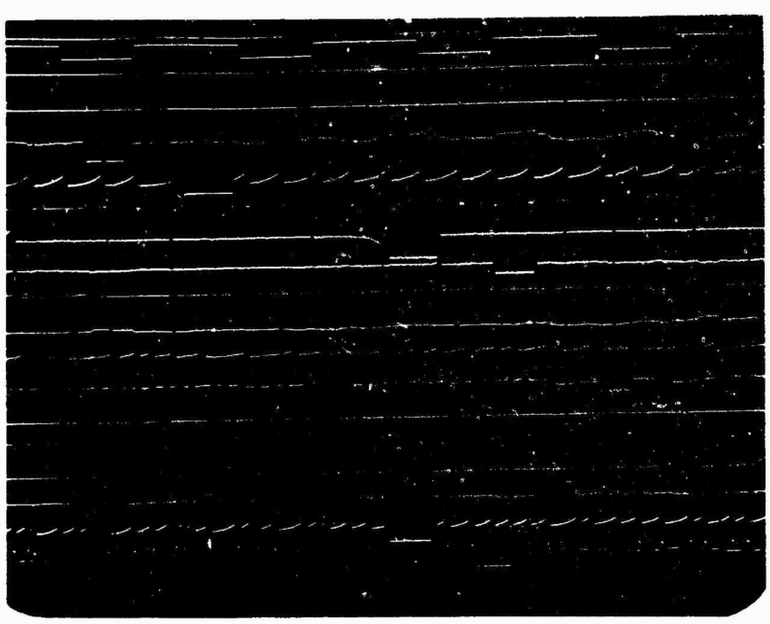

FIG. 21 Section of NRL Telemetering Record

Data Recording and Recovery

Certain types of data, solar spectra for example, are not readily adaptable to transmission by the telemetering system discussed in the preceeding chapter. It is, therefore, desirable to make records within the warhead during the V-2 flight and to recover these records after the missile has returned to the earth. The flight of May 10, 1946 indicated that great care would be required if physical recovery of equipment or records was to be achieved after impact. After this flight, an extensive search of the impact crater and surrounding area failed to recover any of the rocket instrumentation. In the preceding flight only a few pieces of equipment were found after impact, in spite of the fact that this rocket rose to an altitude of only 14,000 feet.

Two possibilities for increasing the chances for physical recovery after impact seemed worthy of investigation. The first was to render the missile more unstable when it re-entered the atmosphere and thus reduce its terminal velocity. The second possibility was to eject equipment near the end of flight and reduce the velocity of the ejected equipment by some trailing device. The use of parachutes to lower all or part of the missile was considered. It was felt, however, that the development of parachutes to operate under the exacting conditions involved would be a lengthy process and that some more portions of the equipment could be designed sufficiently rugged to withstand a relatively high impact velocity.

In June 1946 the New Mexico School of Mines began work on the recovery problem, operating under a Bureau of Ordnance contract and under the technical direction of APL. The systems developed for warhead blow-off and for ejection are described in the following paragraphs.

Warhead Blow-off Technique

It was thought that if the V-2 were separated by explosion into two sections as it entered the atmosphere the velocity at impact would be considerably reduced since the pieces would possess less aerodynamic stability than the whole rocket. Consideration was given to the following methods of reducing aerodynamic stability:

1. Blow-off of tail-fins with a small amount of explosive to render the missile so unstable that it would break up through inherent structural weakness.

2. Separation of the missile by explosives at the junction of the control compartment and fuel section.

3. Separation of the warhead from the body of the V-2 by a small amount of explosive on the struts adjacent to the warhead at the top of the control compartment.

The first method was discarded largely because of difficulties involved in installation and the lack of assurance that it would guarantee separation. The second method was not used because of the possibility of the light control section offering some stabilization to the falling warhead. Since the third

method seemed to be the most practical, it was adopted and developed by the New Mexico School of Mines.

The Naval Research Laboratory had already attempted warhead blow-off in a flight just prior to the APL flight of July 30, 1946. One-pound charges of TNT were placed on each of the four struts of the control compartment, but this did not effect separation of the warhead from the main body of the V-2. It was, therefore, apparent that a larger charge should be used in the APL attempt.

On the July 30, 1946 flight, one pound each of TNT and nitrostarch were bolted to each of the four main struts of the control compartment. These were fired from a central source by dual strands of primacord actuated by two No. 3 electric caps. Warhead blow-off was successful, and the main body of the rocket pancaked on the desert with no crater (Figs. 22, 23, 24). This was a notable achievement, demonstrating that the velocity at impact was greatly reduced by severing the warhead on descent. However, despite a diligent search, the warhead was never located. It is believed that the explosive charge was excessive and destroyed the warhead assembly. On October 24, the same procedure was followed except that a two-pound charge of TNT was used on each of the struts. Only the base plate of the warhead was found. It was punctured and apparently had been torn from the cone by an excessive amount of explosive. On several later flights, the charges were moved to a position 18 inches below the warhead, but this did not conclusively affect the chance for warhead recovery. On the April 8, 1947 flight, the charge was reduced to one pound placed on each strut just below the base plate, with the result that the warhead was recovered in one piece. The base plate was not punctured, as on the October 24, 1947 flight when the two-pound charge was used, but was bent so as to indicate that the charge had been the cause of the separation. Figure 25 shows a warhead as found on the desert and Fig. 26 after excavation.

The altitude at which blow-off occurs is an important factor controlling recovery possibilities, the optimum being between 20 and 30 miles. If blow-off is effected at a lower altitude, the terminal velocity of the parts is not reduced sufficiently, and if it occurs at a greater height the parts are scattered over an unnecessarily large area. A mechanical timing device was designed and was set to detonate the explosive at 330 seconds, since this would allow the rocket to reach the peak of its trajectory on a 100-mile flight but, on a short 60 mile flight, warhead blow-off would still be effected before the missile reached the ground.

The timing device used was a cam-actuated switch driven by a geared-down 27 volt d-c motor, shown in Fig. 27. Safety precautions were observed in the circuit until the instant of firing in order to prevent premature detonation of the charges on the ground. An additional safety device independent of the motor operation was provided by a pressure-actuated, unshorting switch calibrated to open at 15,000 feet. Installation of the warhead blow-off timer in the control compartment is shown in Fig. 28.

Radio control of blow-off replaced the mechanical timer on the April 8, 1947 and subsequent flights. The same receiver used for radio control of fuel cut-off was employed successfully in this operation.

Warhead blow-off on all flights from that of July 30, 1946, through April 8, 1947 was normal with the exception of the December 17, 1946 flight and occured at the desired time. On the December 17 flight, the missile sepa-

FIG. 22 V-2 Afterbody After Impact

FIG. 23 Relatively Small Impact Damage to V-2 Shown by Closeup View of Tail Structure

FIG. 24 Forward Portion of Afterbody after Impact

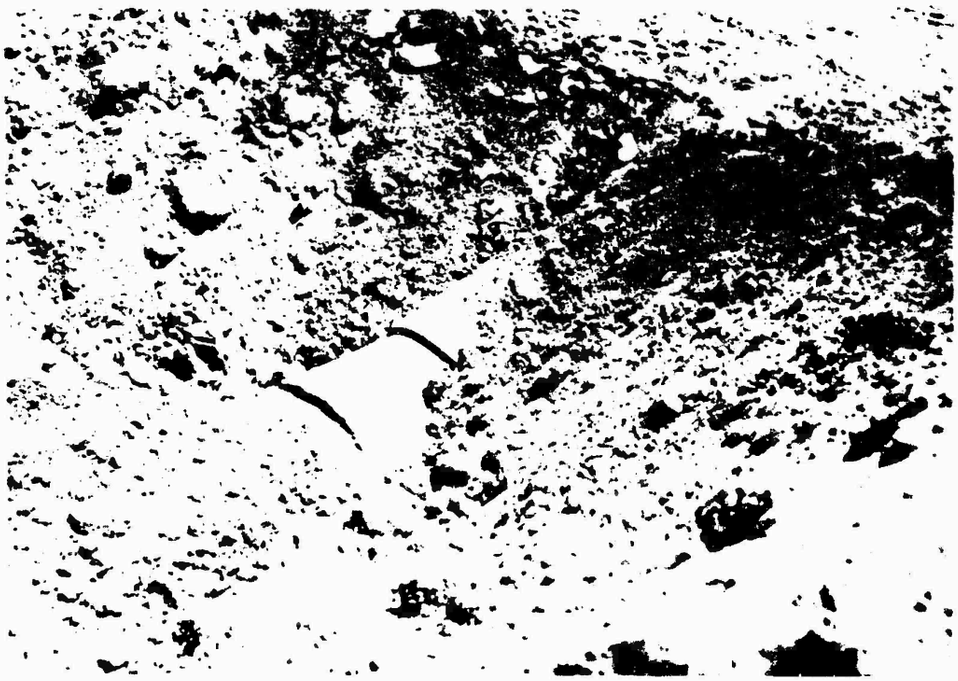

FIG. 25 Warhead as found After Impact

FIG. 26 Warhead After Excavation

rated at 440 seconds, presumably from collapse or explosion of the fuel tanks. Apparently, either the timing equipment, tail launching switch, or connections failed, although sufficient parts were not recovered to ascertain the cause of failure. Warhead blow-off has proved a satisfactory and dependable method of lowering the terminal velocity to a few hundred feet a second, enough to achieve reasonably good physical recovery of recorded data such as exposed spectrographic and movie film protected by thick-walled cassettes.

Equipment Ejection Device

A device was developed and tested by the New Mexico School of Mines for the ejection of equipment during flight.

A cylindrical container 3 1/2 by 10 1/2 inches, shown in Fig. 29, holding three recording units, retardation equipment for the container, a ten-minute flare for night location of the container or a smoke generator for day use, and a package of powder to burst on impact was designed to fit in the ejection cylinder to be installed in the warhead. Connection to the recording equipment was made through a multiple-connection pull-out plug. The retarding device was a series of dural discs, polished to aid recovery, strung on a twelve-foot length of one-eighth inch aircraft control cable. A sectional steel tube surrounded the discs and transmitted the propelling force directly to the top of the flare container. This tube was automatically discarded upon leaving the launcher, allowing the retardation discs to string out. The propellant finally adopted was made up of about 42 grams of 105mm howitzer propellant and 10 grams of black powder, detonated with a No. 6 electric blasting cap. When weighted wooden blocks were used to simulate equipment, this mixture was found to be relatively slow-burning and to provide positive ejection without damaging the launcher or equipment. Ejection was timed for 320 seconds, to be accomplished by the warhead blow-off timer. The ejecting end of the ejection cylinder was solder-sealed with a brass plate to maintain the pressurization in the warhead. In addition, the propellant end was provided with a gasketed, flanged end plate to allow insertion of the propellant after all other installations were complete.

Tests of the assembled equipment which indicated that recovery might be possible were made by dropping it from an airplane at about 5000 feet. The blue water-color paint powder was distributed over an area about 15 feet in diameter. The ejection equipment was installed in the warhead for the October 24, 1946 flight, but during the final pressure tests of the warhead, the safety factor for the unit was exceeded and the equipment was damaged to some extent. As too little time remained to effect repairs, the ejection opening (Fig. 30) was welded over and this part of the test cancelled. This equipment has not been included on any of the other flights to date.

Recording Equipment

Various types of recording apparatus have been installed in the rockets to record data during the actual flight. Satisfactory recovery of photographic film, used in the spectrographs and in the various cameras, has been achieved in a number of instances. The details of the various models used to protect film are given in the discussion of the instruments in which films are used. Electric recording devices have been installed in connection with the Geiger tubes, gyro orienters, and other such devices. These data have also been tele-

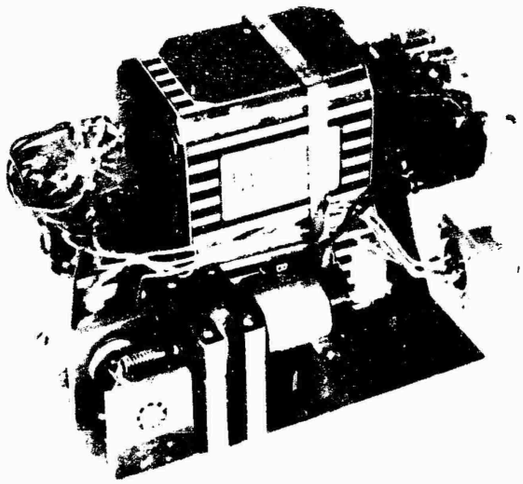

FIG. 27 Cam-actuated Timing Device

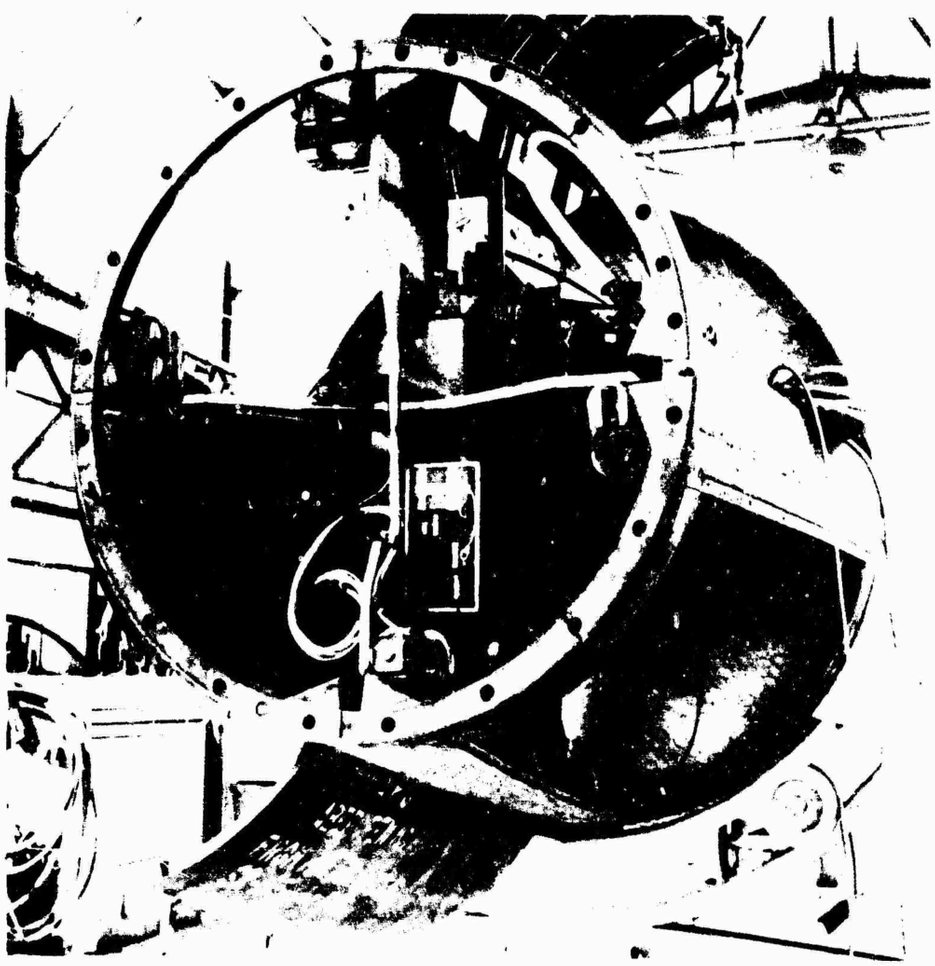

FIG. 28 Warhead Blow-off Timer Installed in Control Compartment

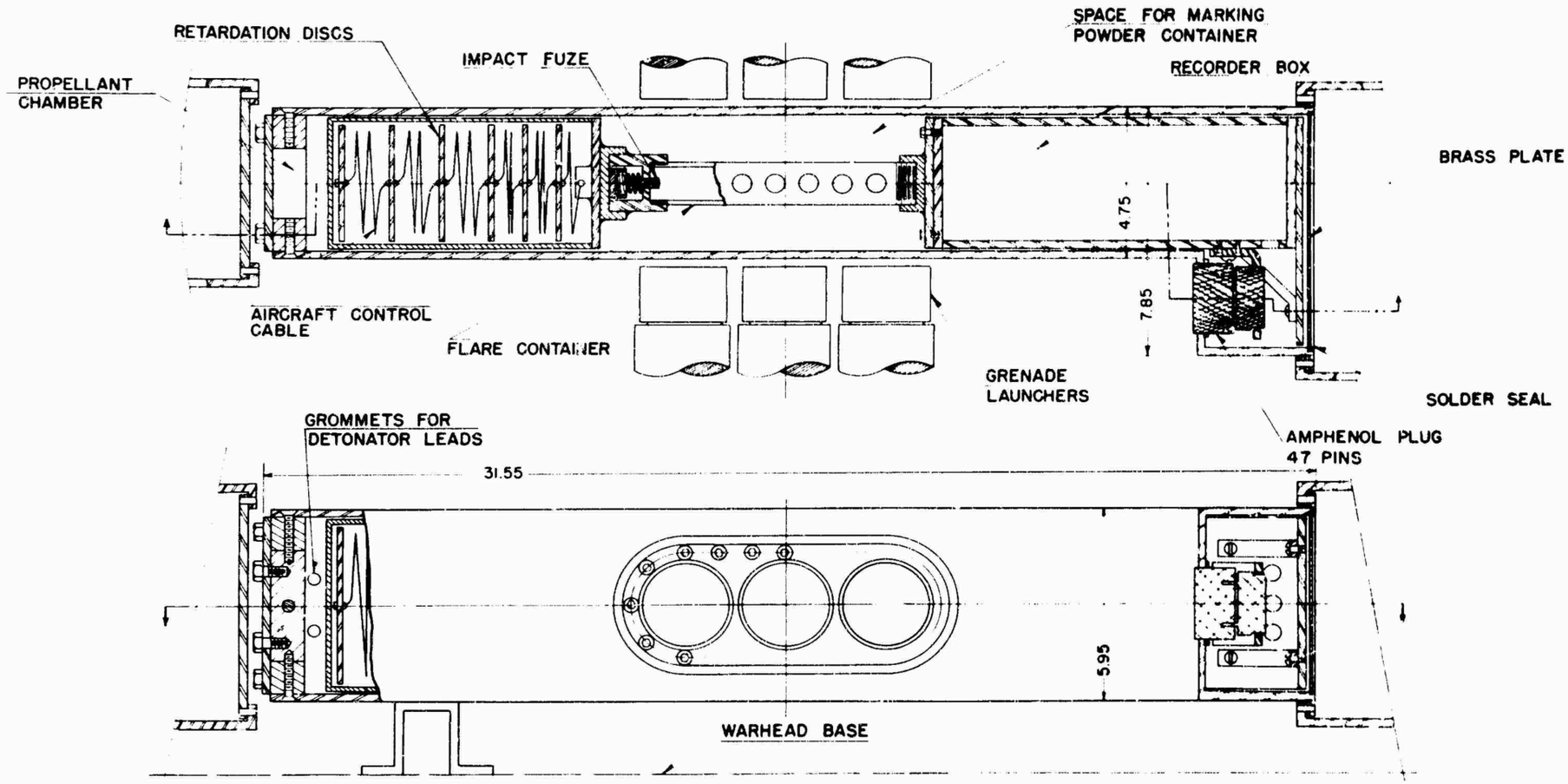

FIG. 29 Recorder Ejection Equipment

FIG. 30 Unequipped Warhead Showing Location of Grenade Launcher and Equipment Ejection Ports

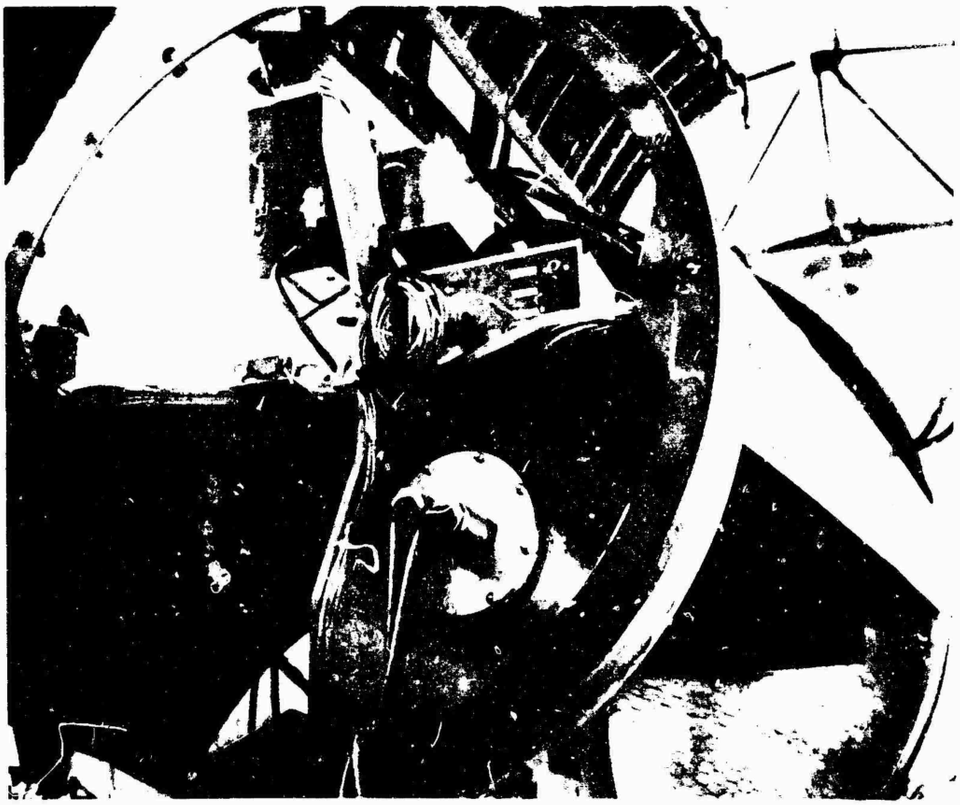

FIG. 31 Brass tape Recorder and Steel Protecting Cylinder

metered to ground stations. Since these electric recorders have been of several types and since to date no data have been obtained through their use (only two were ever recovered), the description of the recorders will be brief.

Preliminary consideration was given to a magnetic wire recorder but this was never used since tests indicated that the wire would be liable to tangle badly at impact. A second type of recorder using a rotating steel drum punched by a series of solenoid-operated needles was used in the July 30, 1946 warhead which was never found, and also on the October 24, 1946 missile where the drum did not revolve, presumably because of the acceleration of the rocket. Use of the steel drum recorder was discontinued because of the problem of driving such a heavy mechanism and because of the difficulty involved in reducing the record. The next recorder used was made from the small 6-channel paper recorder shown in Fig. 33 modified to use a brass tape on which solenoid-operated needles punched a small dot for each impulse. The tape was protected by a steel cylinder one-half inch thick with wood packing as shown in Fig. 76. The brass tape recorders were used in the April 16, 1946, May 10, 1946, October 24, 1946, December 17, 1946 and April 1, 1947 missiles, but none was recovered. Figure 31 shows the recorder cylinder mounted in the V-2.

Since a sufficient supply of brass tape recorders was not available to permit use in future V-2 rockets, work was started on a photographic recorder in which small flashing neon lights expose 35mm film. With a lens aperture of f:3.5 and a focal length of 2 inches, it has been possible to record 20 channels with a resolution of better than 100 counts per second.

Such a recorder was hurriedly constructed for use in the April 8, 1947 missile, but unfortunately did not operate because of insufficient motor driving power. A new design has been made with a stronger motor and proper film alignment providing for 50 feet of film to be reeled up into an armored cassette.

A timing signal derived from motor-driven commutators or from a resistance-capacitance oscillator was imposed on each of the various recording devices.

For most laboratory test purposes, a 20-channel Esterline-Angus pen recorder has been used. These recorders have proved to be of great value, allowing visual inspection of all channels simultaneously during operating tests. A section of the ground test record so obtained is shown in Fig. 32.

Impact Area Search

The location of the impact area, and the searching of this area for recoverable equipment, has developed from a hit-or-miss attempt by a large number of untrained men into a skilled, coordinated effort by a few trained men. Warhead blow-off has eliminated the need for extensive searching parties and digging operations, since the equipment remains on the surface of the ground after its terminal velocity has been reduced by the separation of the missile, rather than forming the large craters common before the blow-off technique was perfected. Recovery in the April 8, 1947 flight was 100 per cent successful.

In the early flights, the impact area was usually 70 to 100 miles from the launching site and in a terrain unfavorable to recovery. Growth often obscured vision to distances no greater than 10 feet and the time consumed in traveling to and from the impact area often took a major part of the working day.

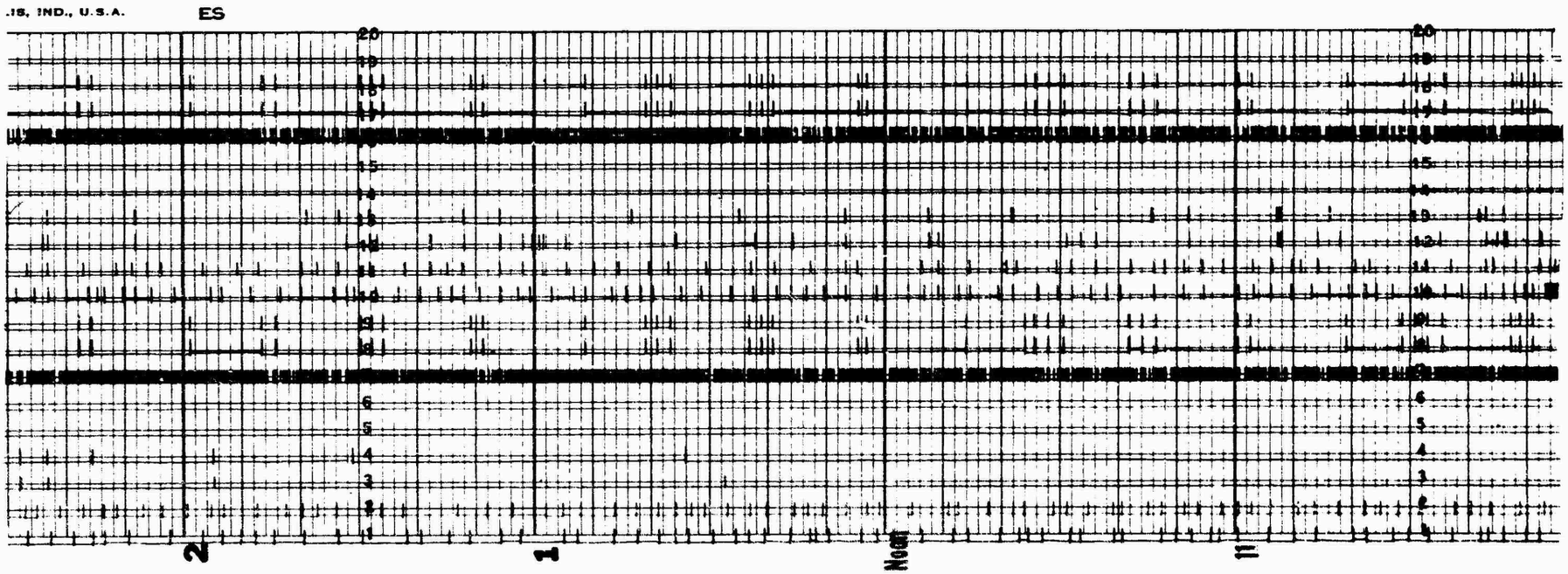

FIG. 32 Portion of Laboratory Test Record

On the July 30, 1946 recovery, for example, a number of searchers were assigned by the commanding officer of the 1st Guided Missile Battalion, Fort Bliss, Texas. The men were stationed in long lines at intervals of about 10 feet, and searched an area of about 10 square miles in three days.

Current search parties consist of about 10 experienced men; larger parties are organized only if the critical items are not found in a reasonable time. Air reconnaissance planes report the impact point. Ground observers at 10 mile intervals are stationed along the expected trajectory and with their aid, communication is maintained between the search party and the spotters.

In cooperation with the Army Ordnance Department at White Sands, an aerial survey was made to determine which areas of the proving ground would be desirable for the impact area, and recent flights, a new programming of the flight has been used in an attempt to have impact occur in a more accessible region where growth is not excessive. This new programming has greatly reduced the effort required for recovery.

Aerial reconnaissance is maintained over the impact area, which is usually from 6 to 8 miles long and 2 to 4 miles wide, to lead in the search party and to locate equipment strewn withing the impact area. The equipment has been found to form a rather consistent pattern, and from the location of a few pieces of the equipment the experienced searchers can predict where the rest of the equipment will probably be. It has been noted, for example, that all the equipment contained in the warhead will be found in one relatively small area and all the equipment in the main body and tail section will be found in another small area. The equipment in the control compartment, which is blown apart high in the air by the warhead blow-off, is scattered over a wider area.

A summary of apparatus recovered on various flights is presented in Table II.

TABLE II

RECOVERY OF APPARATUS FIRED IN V-2 ROCKETS

Date	Item	Location	Recovered	Not Recovered
July 30, 1946	Two steel drum recorders	Warhead		X
	Alpha particle film	Warhead		X
October 24, 1946	Three brass tape recorders	Warhead		X
	Three steel drum recorders	Control Compartment	X	
	Spectrograph	Tail	X	
	Earth Camera	Midbody	X	
December 17, 1946	Alpha particle film	Control Compartment	X	
	Brass tape recorders	Warhead		X
	Brass tape recorders	Control Compartment		X
	Grenade camera	Control Compartment		X
	Fungus spores	Warhead		X
April 1, 1947	Yerkes spectrograph	Tail	X	
	APL spectrograph	Warhead	X	
	Earth camera	Control Compartment		X
	Eight alpha particle films	Control Compartment		X
	Three brass tape recorders	Control Compartment		X
April 8, 1947	Neon recorder	Control Compartment	X	
	Spectrograph	Warhead	X	
	Earth Camera	Control Compartment	X	

Chapter III

COSMIC RAY STUDIES

Preliminary Cosmic Ray Experiments

The April 16 and May 10, 1946 V-2 rockets were equipped with the original German warhead in which the space was not definitely assigned to any particular group for scientific purposes. The Applied Physics Laboratory was offered the opportunity of doing a simple experiment in the first and third V-2 missiles for the purpose of gaining experience with rocket instrumentation. Particular points of interest to APL were (a) a preliminary survey of cosmic rays at high altitudes, (b) design specifications for mounting equipment, (c) type of equipment practical for use in rockets, (d) whether this equipment would operate under in-flight conditions, (e) and recovery possibilities.

Virtually the same type of equipment was flown on each of the two flights. A single Geiger tube shielded by an inch-thick lead cylinder was used, together with a high voltage power supply made up of small hearing-aid batteries. A simple three-tube circuit formed the Geiger pulses to the proper shape, amplitude and signal level to operate a small motor-driven solenoid recorder which punched on a moving brass tape. Circuits were actuated by a gravity switch where the initial acceleration closed an interlock system applying potentials to the circuits and starting the recording mechanism. Also included was a roll of exposed 35 mm film.

All the instrumentation illustrated in Fig. 33 was built into a unit fitting into the housing shown in Fig. 34. This housing, or top hat, measured about 13 x 15 inches and was pressurized at atmospheric pressure. The sealed unit was bolted in a hole in the base plate of the German warhead. The unit was entirely self-starting, self-powered, and self-recording. No telemetering was available for the flights.

Because of operational failure of the missile, the April 16 flight reached only 14,000 feet. The warhead was recovered and the cylinder shown in Fig. 35, was returned for examination. It was found that the recorder had not operated, presumably from the lack of sufficient acceleration on the gravity switch which was set to operate at 4g. The previously exposed film was recovered in good condition and was satisfactorily developed. On the May 10 flight the rocket attained an altitude of 90 miles and formed a large crater upon impact. Considerable effort was expended in arranging and conducting excavation, but no indication of the warhead was ever found.

Equipment and Circuits for V-2 Cosmic Ray Experiments

Cosmic Ray Telescopes

Use of the coincidence technique as applied in Geiger counter telescopes permits the connection of counters in such a manner that several must discharge simultaneously or within an assignable time interval of each other. Thus, it becomes possible to determine the direction of a particle by the use of two or more counters placed in line. Multiple coincidences permit analysis of the

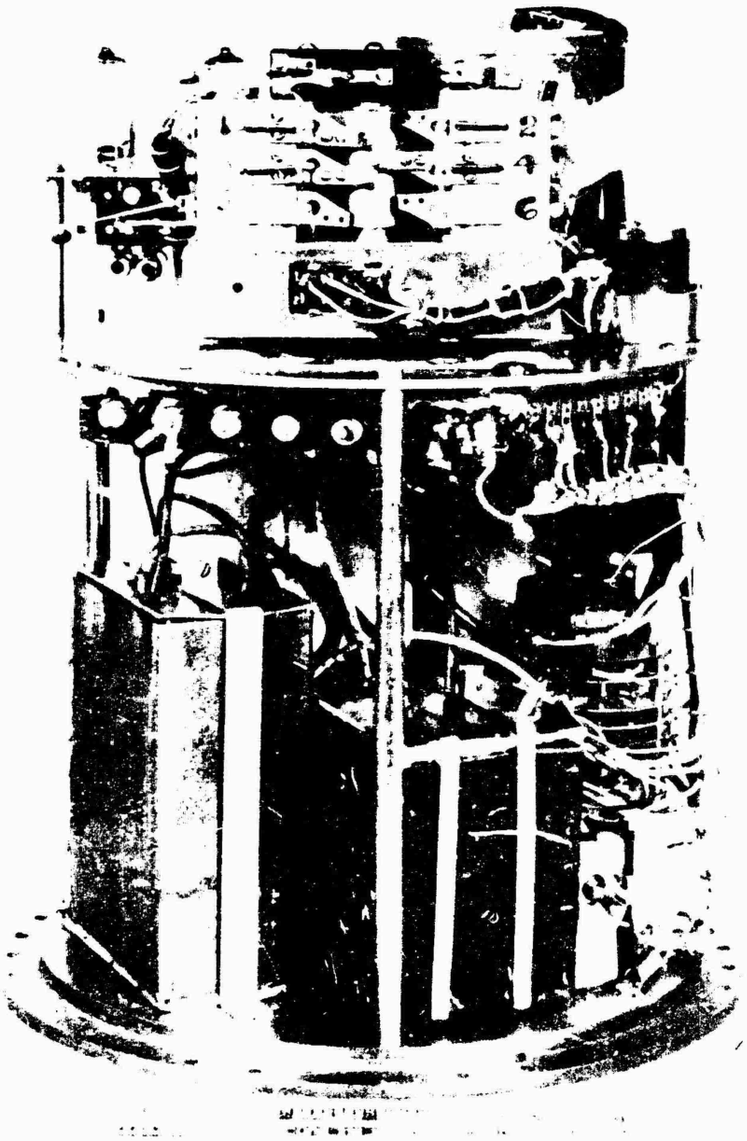

FIG. 33 Assembly of Early Cosmic Ray Instrumentation Prior to Installation in V-2 warhead

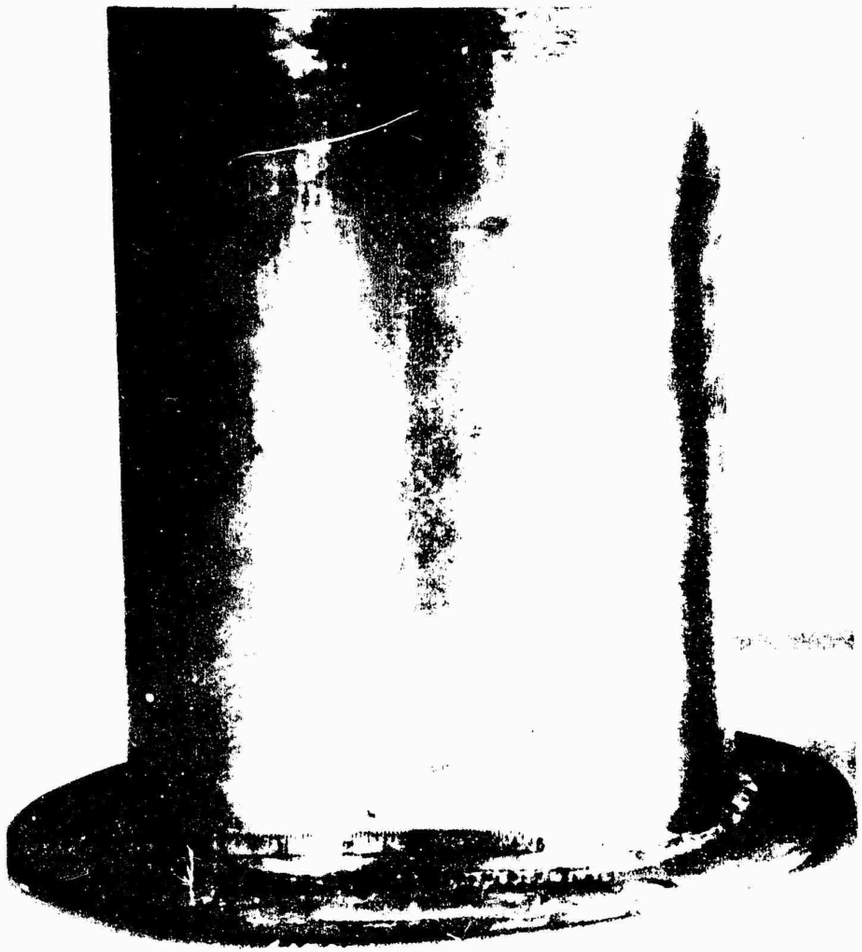

FIG. 34 Housing and Cosmic Ray Instrumentation

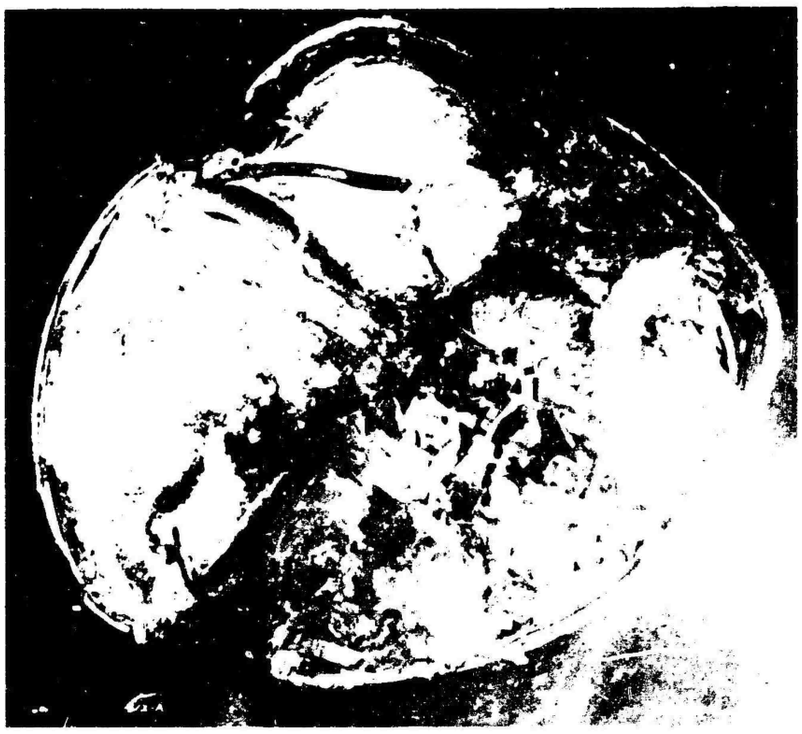

FIG. 35 Condition of Cosmic Ray Recorder Cylinder After Impact

complex ionizing phenomena encountered in the cosmic radiation in which an ionizing particle may by followed as it traverses matter and generates secondary particles with various characteristics.

The Geiger counters used in the cosmic ray investigations are furnished by the Geophysical Instrument Company of Arlington, Virginia, and are one inch in diameter and eight inches long, with a 1/32-inch copper wall. The central electrode is a three-mil tungsten wire providing approximately a six-inch active length. The lower knee of the plateau occurs at 900 volts and the upper knee at 1150 volts. Plateau slope is held within five per cent per 100 volts. The tubes are operated at 1080 volts, being selected so that all tubes are operated at a fixed voltage.

Measuring five-fold vs. four-fold coincidences with counter tube axes in the same vertical plane has given an efficiency of 99.1 per cent for these tubes. The effective dead time measured as time for the pulse envelope to return to one-half of full value under forced counting has shown an effective dead time of 250 microseconds.

The Geiger tube cases are operated at ground potential, the central electrode being at 1080 volts through 1 megohm with the output pulse coupled through 50 micro-microfarads. Each Geiger tube is operated directly into a cathode follower circuit, allowing impedance cables to be used to carry the telescope pulse through low impedance cables to associated mixers, scales, etc.

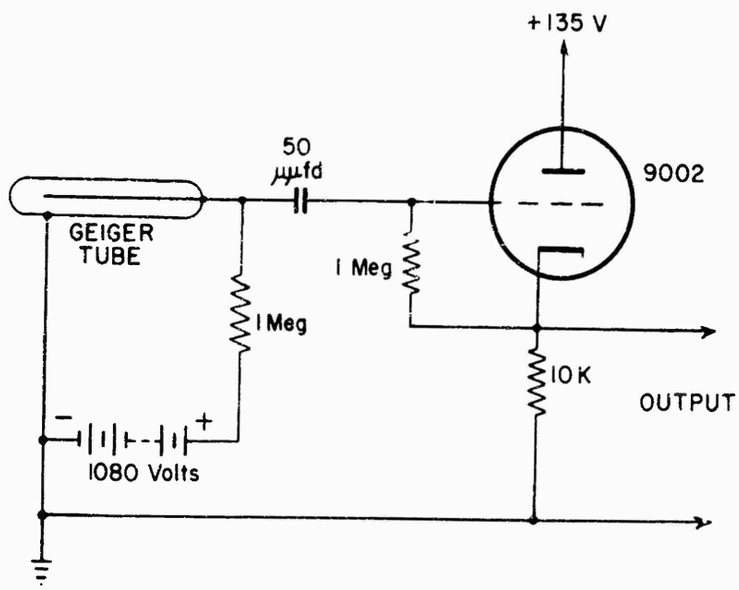

FIG. 36 Fundamental Geiger Tube Circuit

Cathode Follower Circuits

One of the most useful devices for rocket instrumentation is the cathode follower, a degenerative vacuum tube circuit in which the inverse feedback is obtained by virtue of an unbypassed cathode resistor across which the output is taken. The circuit is essentially an impedance-matching or impedance-lowering device having less than unity again. Its high input impedance and very low output impedance render it particularly suitable for coupling between pulse generating or pulse transmitting circuits and inter-connecting cables or shunt capacitance which otherwise might cause objectionable loading effects. The cathode-follower output "follows" the grid-input voltage and, hence, is of the same polarity, so that the device shows no phase shift. This, together with the high input impedance, low output impedance, and low distortion, makes the cathode follower circuit useful throughout the V-2 instrumentation where the majority of the signals are in the form of pulses.

The coupling condenser and cathode follower for each individual Geiger tube of the telescope is mounted directly on the telescope and shielded to reduce interference and crosstalk. From the cathode followers, shielded cables carry the pulses to associated equipment. By these precautions, crosstalk has been reduced to a negligible figure. The fundamental Geiger tube circuit is shown in Fig. 36.

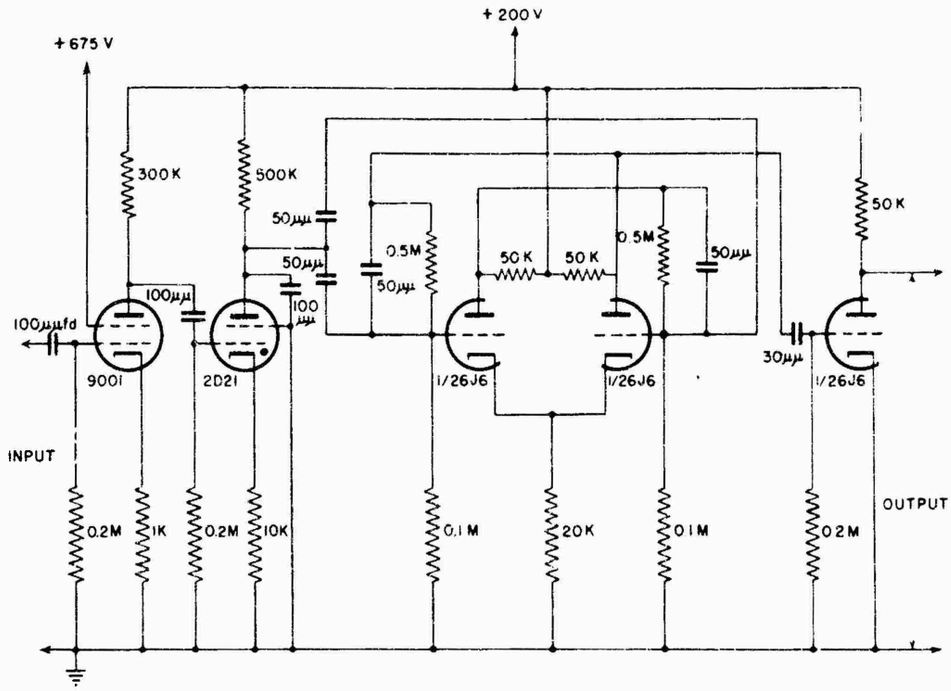

FIG. 37 Single Section of Scaling Circuit

Scaling Circuits.

The telescopes are mounted in the doors of the warhead and arranged so that the top two are external to the warhead proper and exposed to the atmosphere, with the exception of a thin plywood cover. Inasmuch as the counting rate of these two tubes is of such magnitude that it is not possible to resolve the pulses on either the telemetering record or by means of mechanical recording apparatus, it has become necessary to reduce the rate by the use of a "scaling circuit" or electronic counter. One section of this circuit is shown in Fig. 37. This allows resolution of closely spaced double counts, a condition highly probable on statistical grounds, and one which would yield a single count on the average mechanical system. The scaler used is a scale of eight consisting of four binary stages connected in tandem. Each double vacuum tube is connected with appropriate components to form a stage which has two distinct conditions or equilibrium. In the first, one of the two tube sections is conducting, while in the second condition the other section conducts. Either of these static conditions continues to exist until the circuit is triggered by a negative pulse at the appropriate input point of the stage. Four stages in tandem operate in a binary sequence so that each two counts or operations of a given stage results in one count or operation of the next. Thus, eight input counts will produce one output count.

In the present design, interstage amplifiers are used between each trigger pair for the purpose of transmitting pulses of only one sign, and also for the purpose of amplifying the pulse.

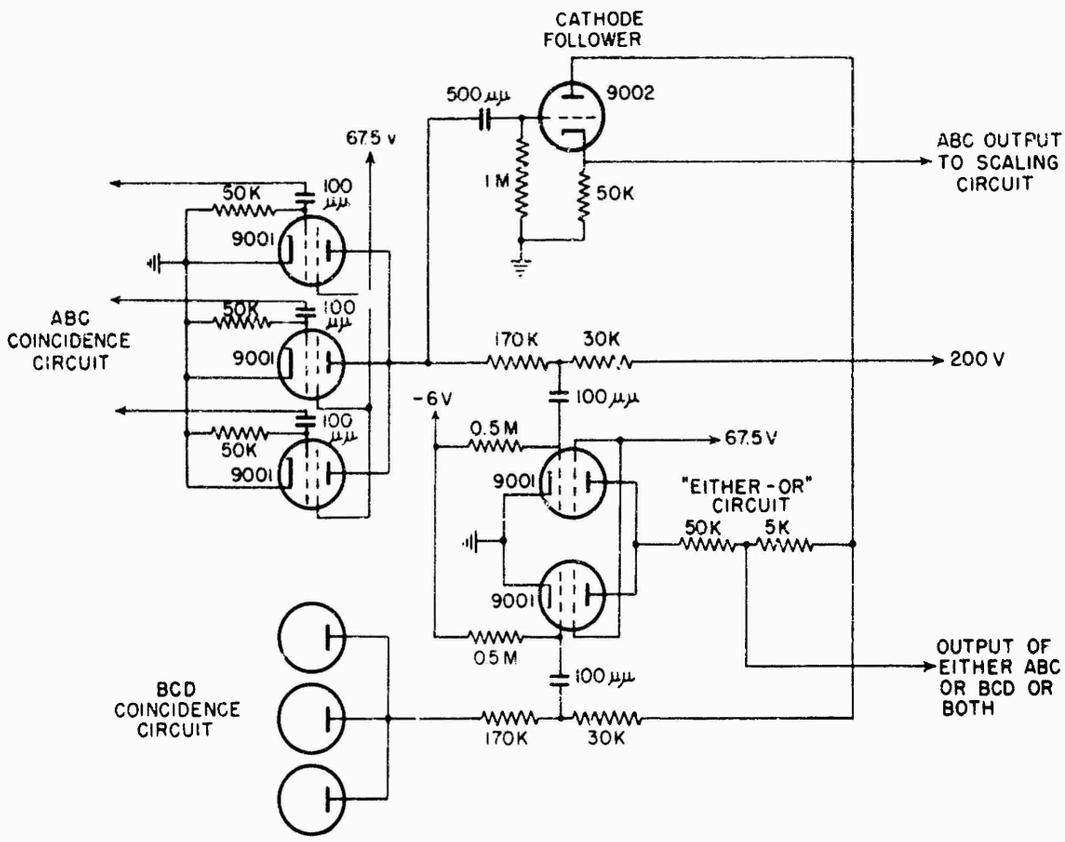

FIG. 38 Typical Rossi Coincidence Circuit

Coincidence Circuits

A typical Rossi coincidence circuit as used with the cosmic ray telescopes is shown in Fig. 38. The essential feature of this circuit is that the plates of the vacuum tubes are connected in parallel and supplied with plate potential through a common load resistor. The grids are connected to the cathodes so that in the absence of a count, all tubes are conducting. Upon arrival of a negative pulse on the grid of any tube, conduction ceases, and the tube becomes a high resistance in the circuit in contrast to its effect as a low resistance in the conducting state. The potential across the common plate load resistor is, therefore, determined by the equivalent of a system of parallel resistances. If all tubes but one become non-conducting (high resistance) there is a condition of two high resistances in shunt with one low resistance. Since most of the current will flow through the low resistance, tubes cease to conduct, by virtue of a simultaneous negative pulse to each, the change in potential of the plate circuit becomes substantial and a large pulse in the output circuit occurs. The outputs of the coincidence circuits are applied to a cathode follower where, as before, the low impedance output property of this circuit allows the use of long interconnecting low impedance cables.

Figure 39 shows the arrangement of Geiger counters, cathode follower and coincidence circuits as used in the cosmic ray experiments.

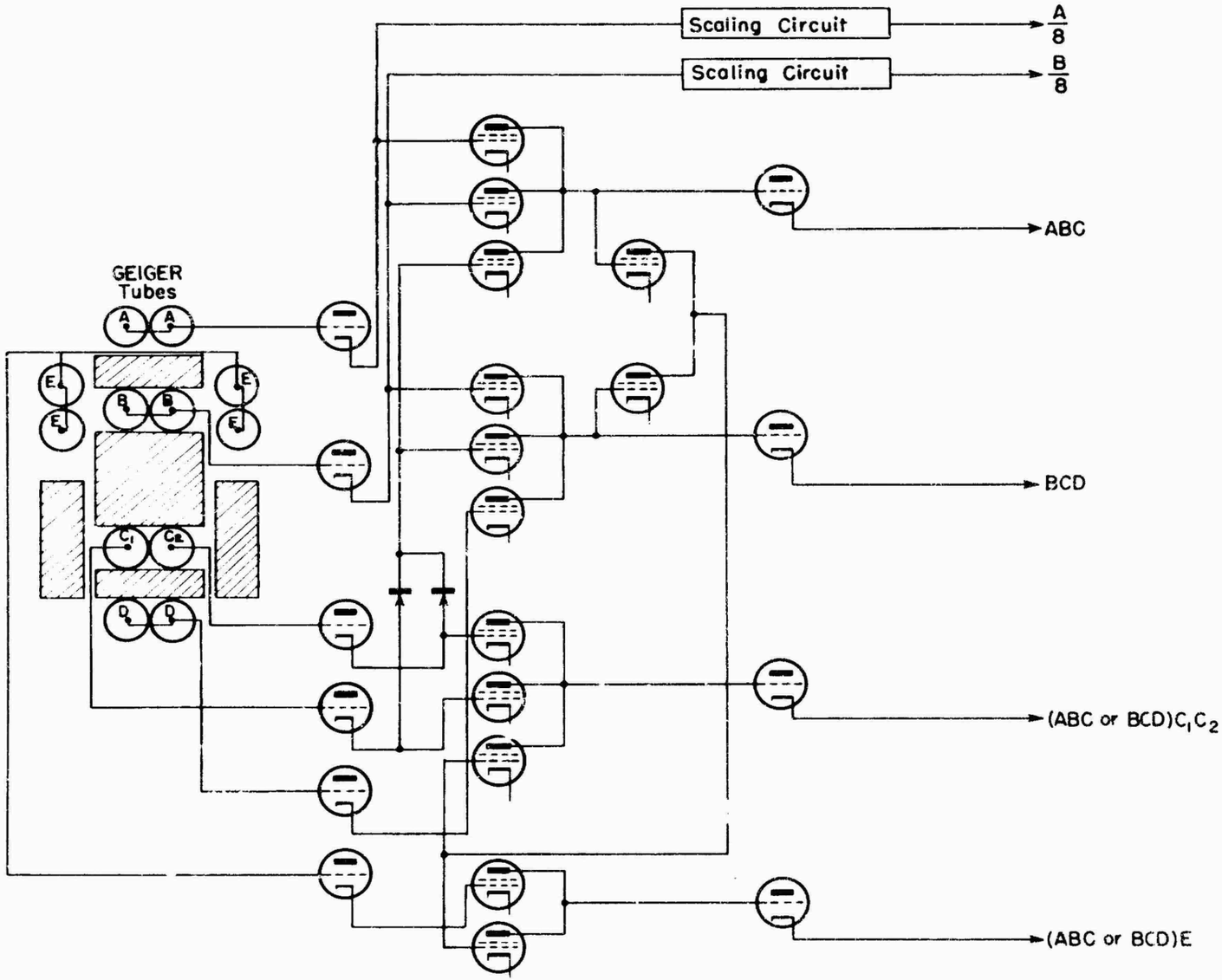

FIG. 39 General Circuitry for Cosmic Ray Experiments

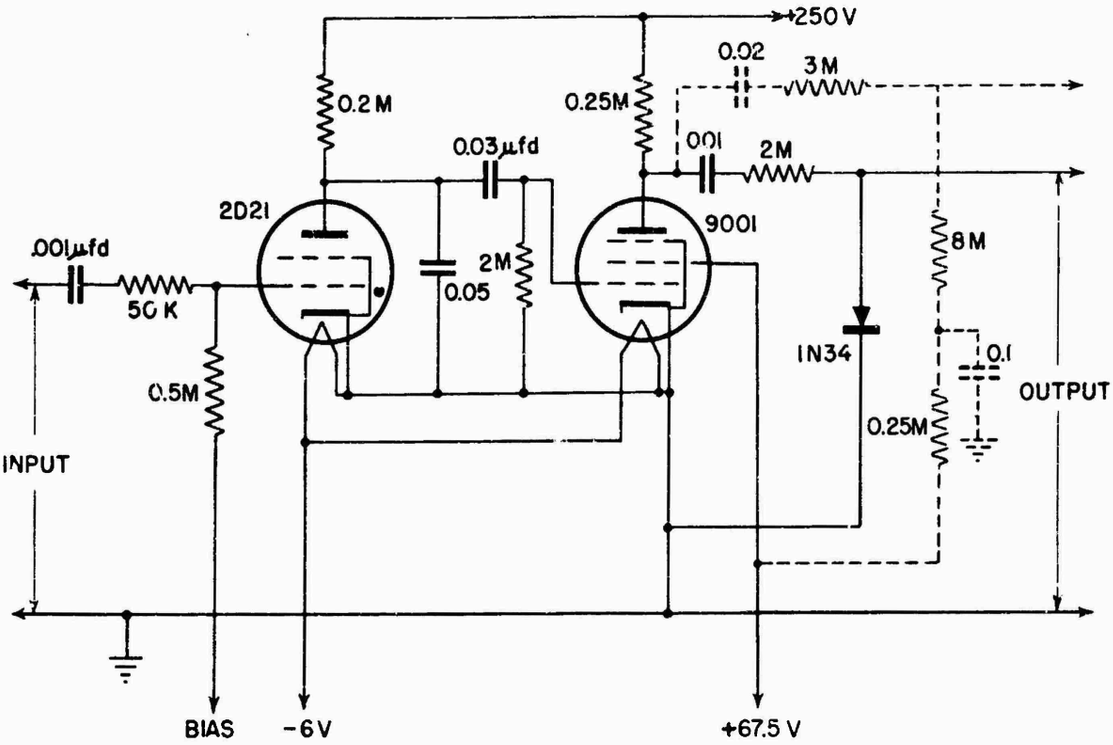

FIG 40 Pulse-Shaping Circuit

Telemetering Premodulator

Data recorded by telemetering results in pulses of various amplitudes, shapes and widths. In order to utilize these properly it is necessary to shape and limit them to conform to the NRL telemetering system, which requires a positive six-volt pulse. Experience with telemetering early in the program indicated that it would be desirable to use more than a unit portion of the sampling rate. Thus, between three and four telemetering pulses are used to record each individual count. In this manner it is much easier to differentiate between signal and noise. The telemetering premodulator output pulse is a square wave with a slight tapering off, and of a width as described above. Pulse shaping is accomplished by feeding all data pulses to the premodulator consisting of a controlled thyratron relaxation oscillator and saturable limiting amplifier as shown in Fig. 40. Figures 41 and 42 show the mechanical layout of the telemetering premodulator.

Recorder Driver

Most mechanical data recorders are low impedance devices requiring considerable power. Figure 43 shows the circuit of the recorder driver used in the current program. It consists of a thyratron, fired by the incoming pulses and extinguished by virtue of the triode in series with the plate circuit. The output taken from the cathode circuit of the triode, again at a low impedance, is the pulse formed when the thyratron discharges.

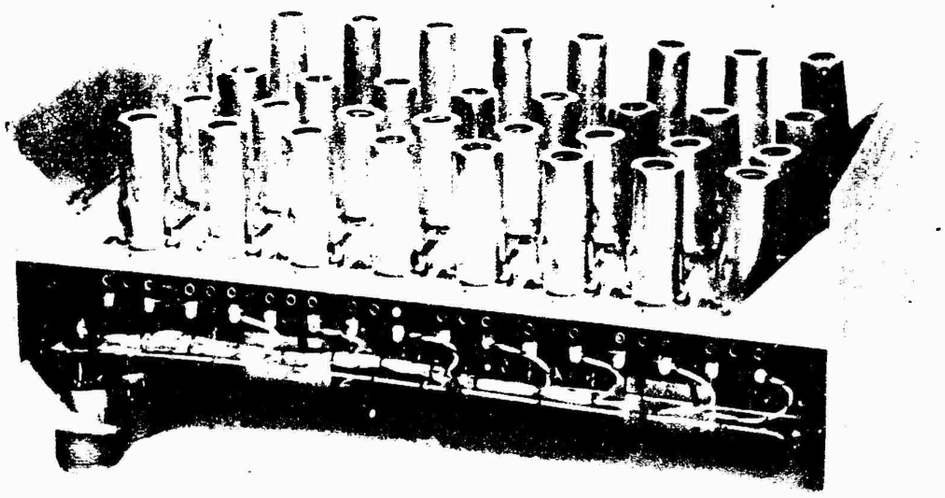

FIG. 41 Top view of Telemetering Premodulator

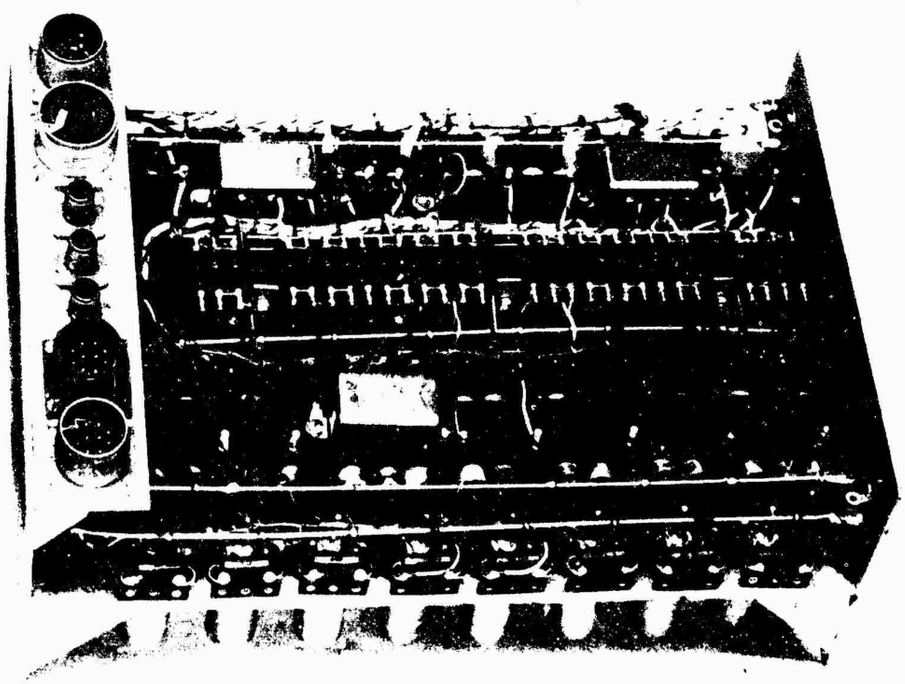

FIG. 42 Bottom view of Telemetering Premodulator Chassis

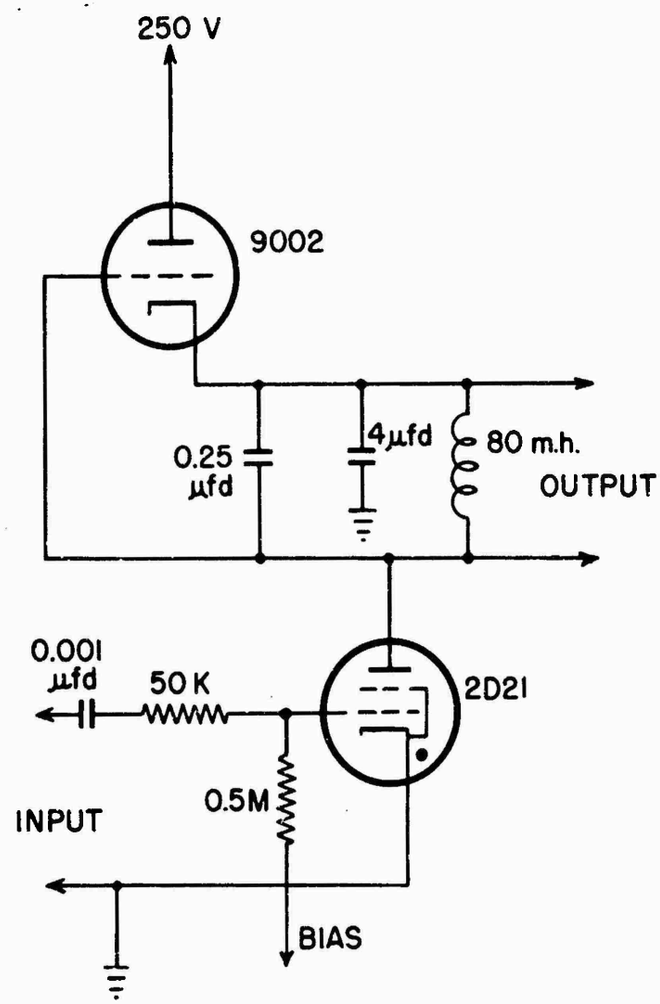

FIG. 43 Recorder Driver Amplifier Circuit

Calibrators and Timers

Figure 44 shows the radioactive phosphorus calibrator used to expose periodically the outside Geiger tubes to a fixed source of beta radiation for the purpose of determining operability throughout flight. It consists of a solenoid-operated plunger containing a shielded source of P^{32} (see page 8, above) which is periodically uncovered. The shielding is for the purpose of removing any gamma radiation contamination which might exist in the radioactive phosphorus. The calibrators are mounted on the inside of the V-2 doors housing the Geiger counter telescopes. The beta radiation is directed through a one-mil aluminum window and is controlled by the timer shown in Figure 45. The timer contains a commutator which successively exposes the radiation in bursts of one, two, three, and four units, with thirty seconds between units and a duration of one second. The resultant "forced" counting rate gives an excellent record of the continuity of operation of the unshielded Geiger counters which are exposed to temperature variations.

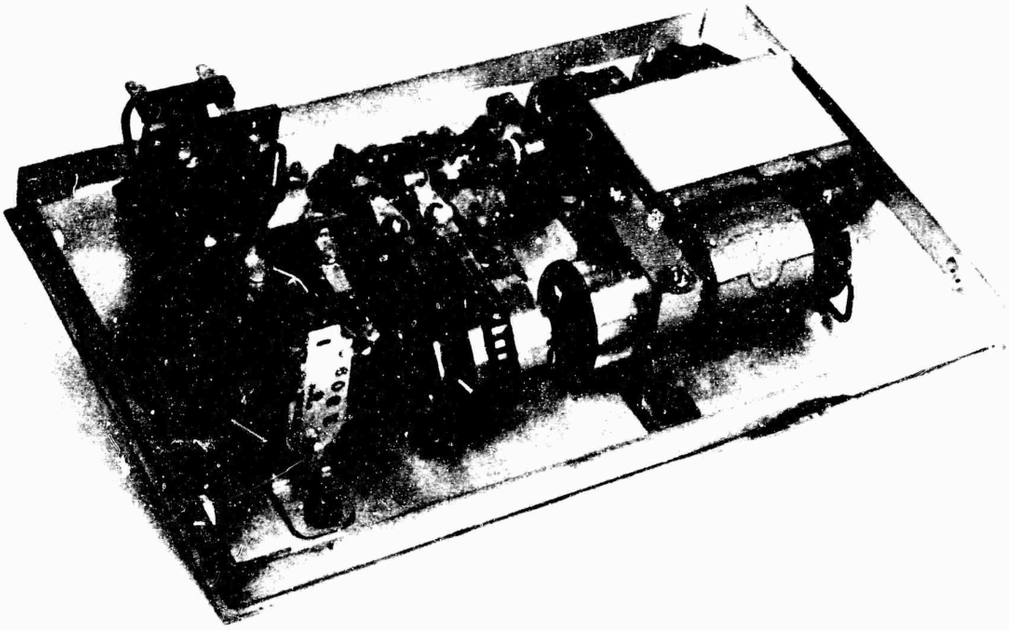

FIG. 44 Geiger Tube Calibrator

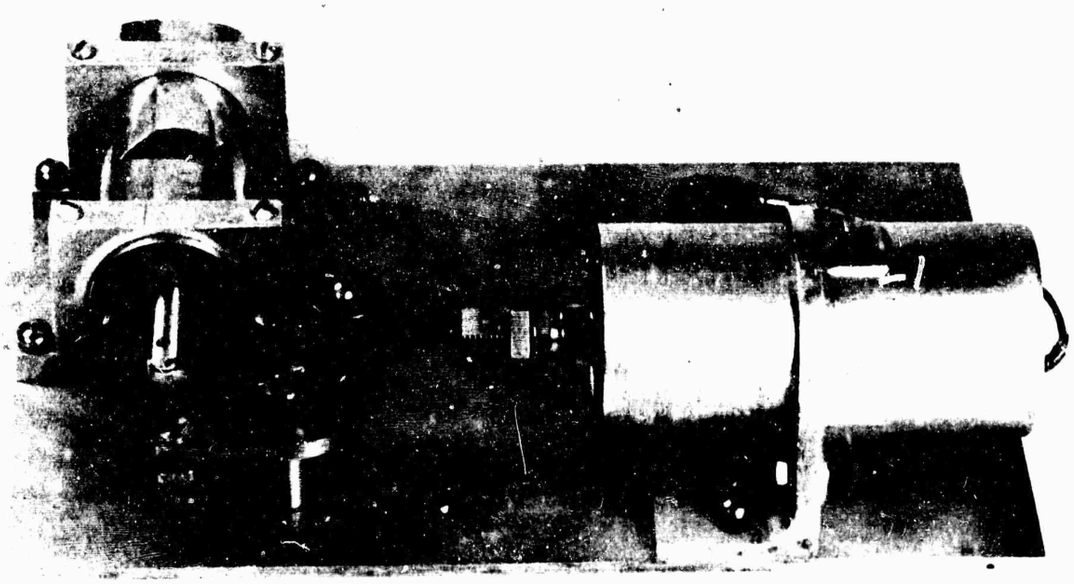

FIG. 45 Calibrator Timer

In addition the timer has a separate commutator which places a timing signal on the record. This is useful for timing mechanical recorder records. Telemetering records include a standard master timing signal.

General Layout of Equipment in the Warhead

Figure 46 shows the arrangement of cosmic ray telescopes, the spectrograph and associated equipment within the V-2 warhead. This arrangement was used on the experiments conducted during the period covered by this report. Two views, in Figure 47, show the equipment in the pyramid frame which is subsequently mounted in the warhead. Figure 48 is a block diagram of the system.

Review of Results of Cosmic Ray Experiments

A detailed account of cosmic ray results in this period will appear in a later report of this series. It is appropriate, however, to present a brief review in the present report.

At the time this phase of the experimental work was begun, there was in existence a considerable body of cosmic ray data from balloon flights of equipment up to the region of 80,000 feet. A few flights to higher altitudes had been made with substantial loads of equipment.

It appeared, however, that the use of rockets as vehicles for cosmic ray equipment would serve three new functions:

1. It would make possible the extension of "curves" of various cosmic ray phenomena to an altitude definitely above the atmosphere (in the cosmic ray sense) and thus make more certain the shape of these curves at the very top of the appreciable atmosphere, where moderation of the primaries first occurs.

2. It would make possible the operation of equipment, for limited times, at altitudes definitely above the atmosphere. Effects observed during such periods could reasonably be attributed to the first impact of primaries on matter.

3. It could transport to high altitudes (even within the atmosphere) much heavier apparatus (for example, heavy lead absorbers) than could practicably be carried by balloons.

Two cosmic ray telescopes, shown in Fig. 49, were prepared for the V-2 flight of July 30, 1946. They were arranged in the warhead in a 90-degree "V" as shown in Figs. 46 and 51. The physical arrangement of the telescope (Fig. 50) was patterned after that of Schein, Jesse, and Wollan[7] with the following changes:

---

[7] Described in Physical Review 57 847 (1940)

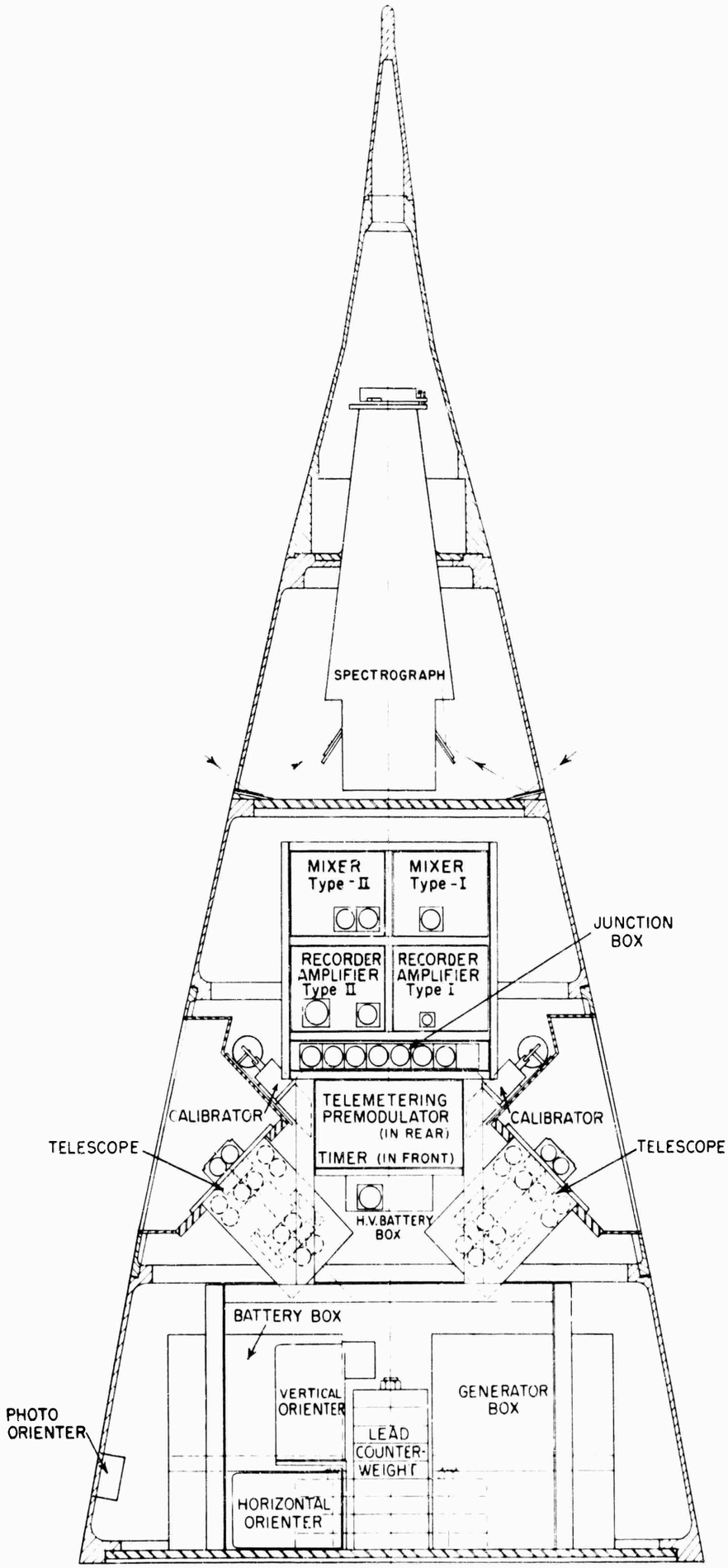

FIG. 46 Warhead Instrumentation

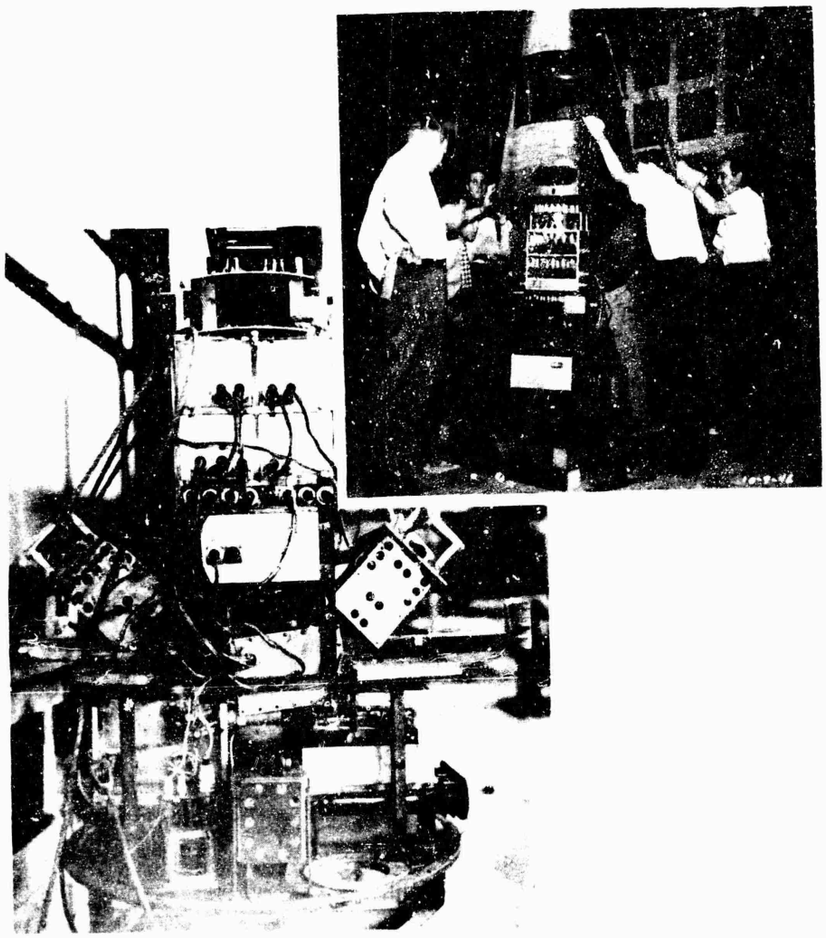

FIG. 47 Assembly of Cosmic Ray Instrumentation Prior to Mounting in Warhead

1. The width of the telescopes was doubled by the use of two tubes in each tray, thus making the counting rate about four times as great. Figure 51 shows the A counters mounted in the warhead doors of the rocket.

2. Tray B was flanked by a pair of guard counters on each side. All four of these guard tubes, E, were connected in parallel.

3. The two tubes in the B tray, B_1 and B_2, (or in subsequent flights, Tubes C_1 and C_2 in C tray) were electrically separated so that a knowledge of multiplicity of particles lying within the telescope could be obtained.

Inasmuch as these measurements were definitely exploratory, the guard counters were arranged for coincidence rather than anti-coincidence with the telescopes in order to record explicitly all events involving them. Likewise, circuits were arranged for transmitting the individual counting rates of several of the counters.

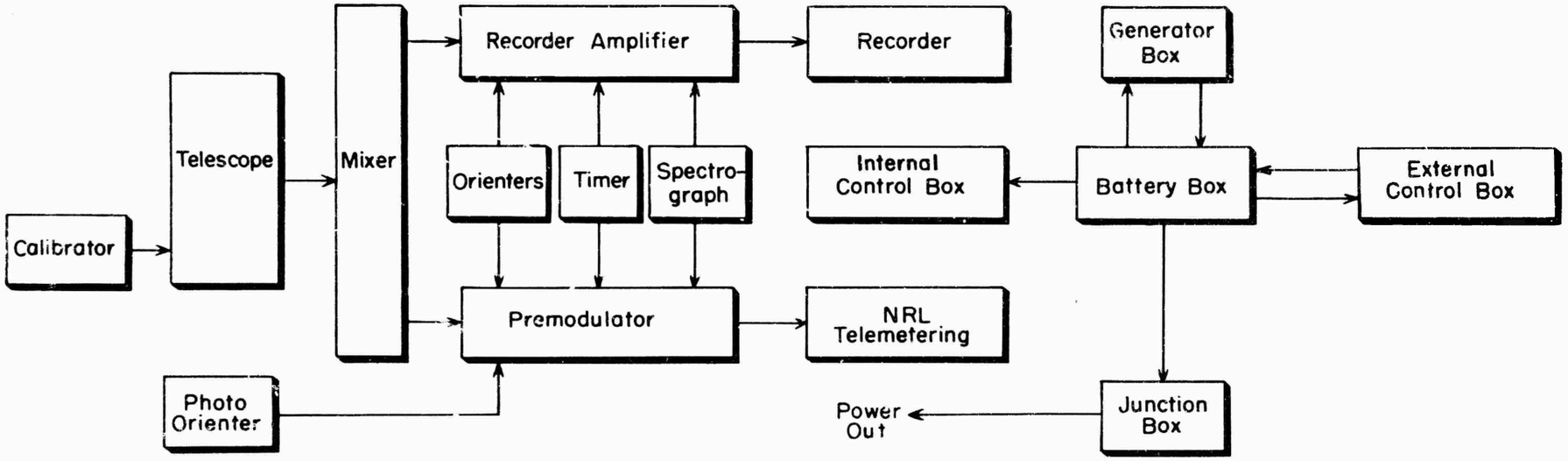

FIG. 48 Arrangement of Warhead Instrumentation

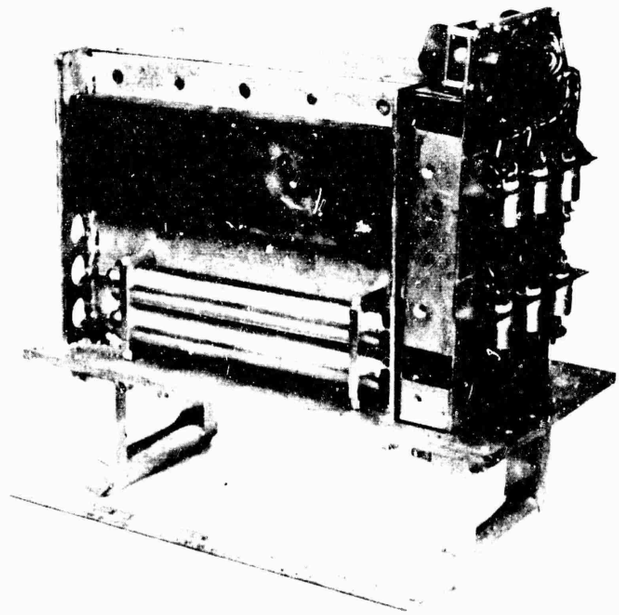

FIG. 49 Cosmic Ray Telescope

Altogether then, the following channels of information from each telescope were provided:

Channel Symbol	Meaning
A/8	Counting rate of $A_1 + A_2$ counters scaled down by a factor of 8.
$B_1/8$	Counting rate of $B_1 + B_2$ counters scaled down by a factor of 8.
ABC	Triple coincidences of either (or both) counters A_1, A_2 with either (or both) counters B_1, B_2 with either (or both) counters C_1, C_2.
BCD	Similar meaning for trays B,C,D.
(ABC or BCD) B_1B_2	Either of the two triple coincidences above with an accompanying coincidence of B_1 and B_2.

(In later flights substitute C_1 C_2 for B_1 B_2)

(ABC or BCD) E	Similar meaning except with one or more of the four E counters.

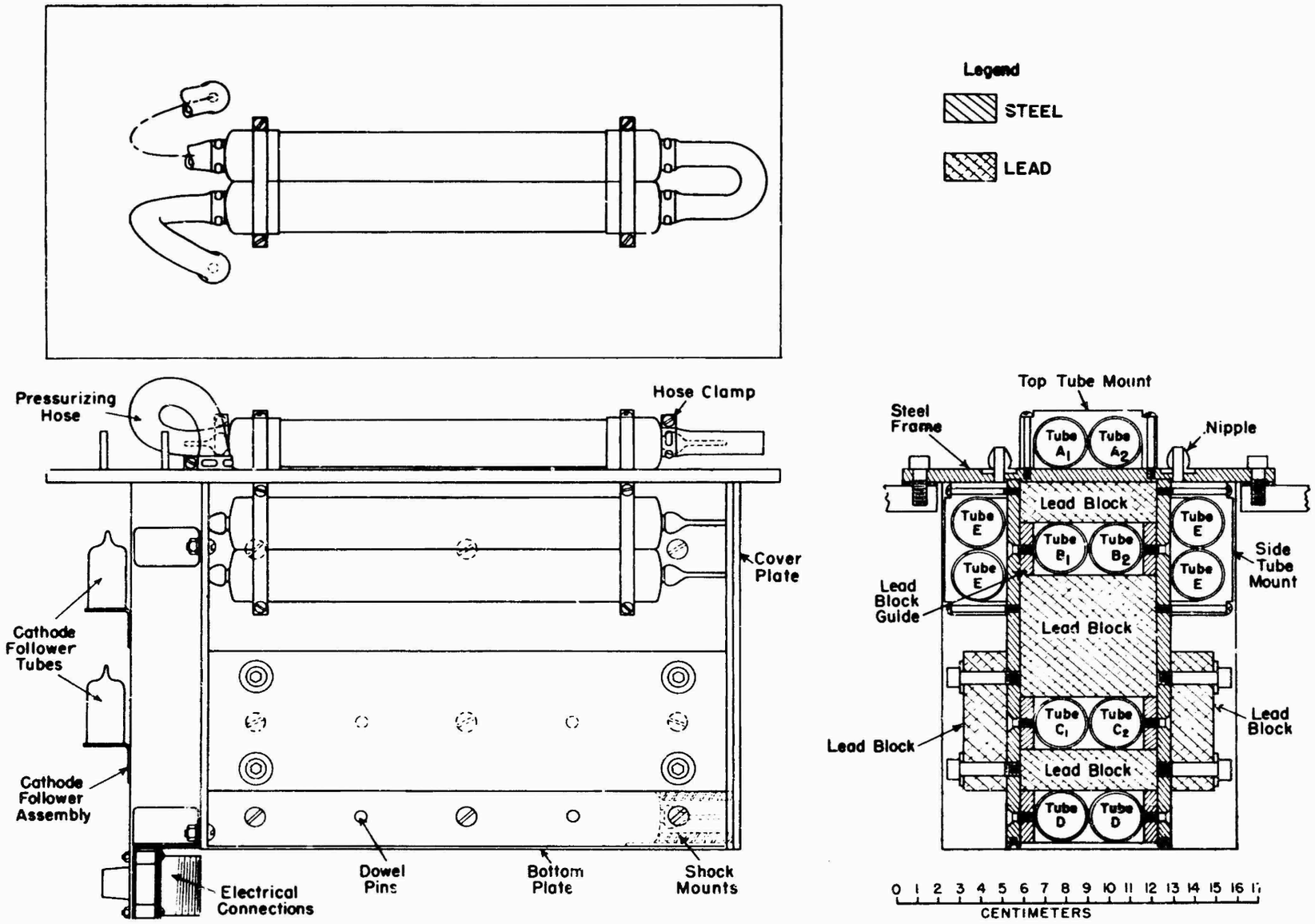

FIG. 50 Construction of Cosmic Ray Telescope

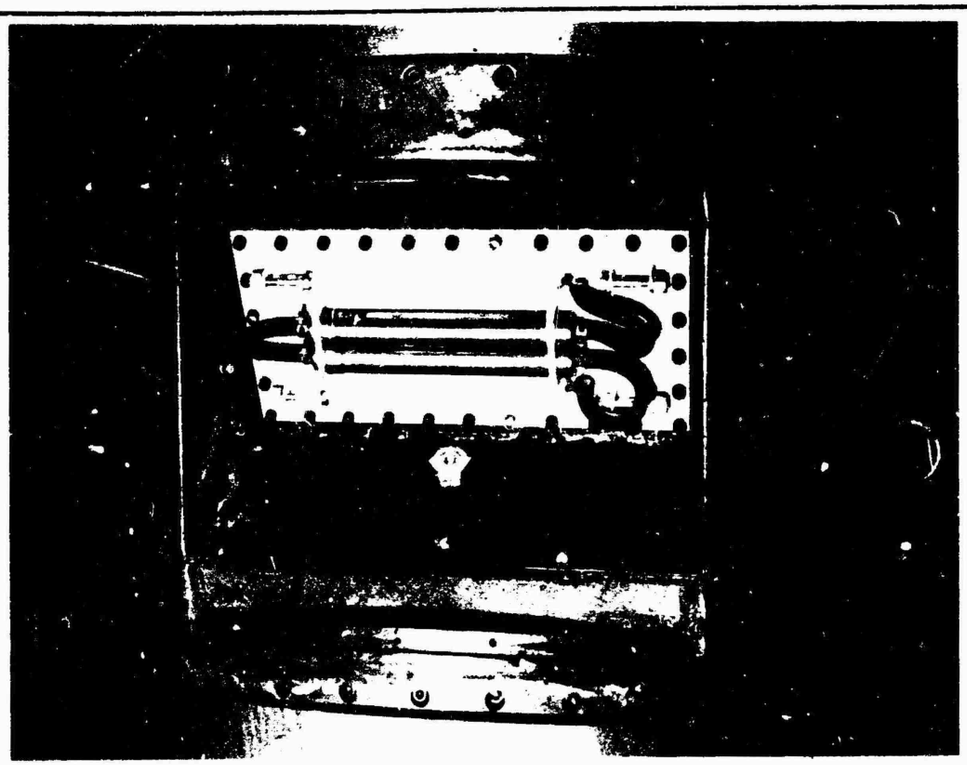

FIG. 51 Cosmic Ray Telescope Mounted in Warhead

The four coincidences above were formed electronically within the missile with a resolving time of about 10 microseconds. Coincidences between channels on the telemetering record could be formed with a resolving time of about 5×10^{-3} seconds.

Good exploratory data were obtained in the flight of July 30, 1946 in spite of certain detailed electronic failures.

Then in the three subsequent successful flights of this equipment on December 17, 1946, April 1, 1947 and April 8, 1947, a satisfactory knowledge of all channels was accumulated.

An identical telescope was flown for some 85 hours in a B-29 airplane at altitudes from 10,000 feet to 36,000 feet in order to fill in data in the lower atmosphere. In this portion of the atmosphere counting rates are so low as to permit only very crude data in a rocket flight. The composite data are still under study but general results and conclusions are as follows:

1. The most striking feature of the results in the enormous (and monotonic) increase in the counting rate of the channels (ABC and BCD) C_1C_2 and (ABC and BCD) E. Whereas at sea level only about 5 counts per hour occur, at high altitudes on the cosmic ray plateau (i.e. above 150,000 feet) a rate of about 4 counts per second exists. This is a ratio of approximately 4000. Plotting the logarithm

of these rates vs. pressure indicates an absorption coefficient of about $(160\ gm/cm^2)^{-1}$ for the component which causes these bursts. It is not yet certain whether this absorption coefficient is to be identified with the primaries themselves, or whether this is a combination absorption curve of the primaries out of various burst producing secondaries.

It seems particularly significant that the counting rate of these channels is a monotonically increasing one. Thus, $(160\ gm/cm^2)^{-1}$ is a lower limit for the absorption coefficient of the primaries. Even if product particles of the primary act are also capable of producing such events, it appears certain that they do not occur in sufficient numbers to cause a transition maximum.

2. The rates of ABC and BCD also increase monotonically but by a much lower factor. However, the simple interpretation of these events as "telescope" counts seems to be entirely untrue at the higher altitudes. Thus, at sea level, the multiple particle events (ABC or BCD) C_1C_2 and (ABC or BCD) E are associated with only a negligible fraction of the telescope events ABC, BCD. But on the high altitude plateau, about five times as many multiple events as "single particle" events occur. Thus, an arrangement such as this, containing large amounts of lead, appears to lose (at high altitudes) the properties of a telescope and become merely an <u>array of counters</u>. Further evidence for this fa[illegible] as follows: At sea level and in fact up to 36,000 [illegible] the counting rates of ABC, BCD and the combination [illegible]CD are accurately in the ratios of their "telescopic" geometry. Calculation of a flux is, therefore, permissible. In fact, the absolute fluxes deduced from these lower-altitude results agree quite well with those previously determined by other investigators at sea level on on mountains. But on the plateau the rates of ABC, BCD and ABCD are not at all proportional to geometry — either if one ignores the associated multiple events or if one subtracts them.

The conclusion that the telescopes containing considerable amounts of absorber lose their simple character also follows from the considerations of (1), above. For if the absorption coefficient of the primary radiation is $(160\ gm/cm^2)^{-1}$, then it is evident that a major fraction of the primaries convert to bursts in traversing 132 gm/cm^2 of lead. In fact, from the determination of the absorption coefficient by the curve in the atmosphere, there is no assurance whatever that the absorption coefficient in lead may not be much different — in particular, greater. Further if a burst of considerable angular spread results then the counting rate of a telescope is due not only to particles lying within the geometry but also to particles lying outside of the geometry.

3. The telescope counting rates ABC and BCD on the plateau are closely the same east and west. This might be interpreted as indicating no azimuthal asymmetry. Yet in view of paragraphs 1 and 2 above, a more proper conclusion seems to be that the array of counters has, only to a minor extent, the properties of a telescope.

4. Some ten curves of the counting rate of the A and B counters, in various combinations have been obtained. In the case of A counters, very lightly shielded in one hemisphere, heavily backed up by lead in the hemisphere, the counting rate (for A_1 and A_2 in parallel) rises from about 2.5/sec on the ground to 110/sec at the Pfotzer maximum; then it declines to about 53/sec and maintains this value constant to as high as 114 miles. The plateau begins at an altitude of about 28 miles. The curve of $B_1 + B_2$ behaves generally similar but exhibits a much less pronounced Pfotzer peak and has about 15 per cent less rate on the plateau. The ground rate of $B_1 + B_2$ is about 1.8/sec, the peak value is about 80/sec, and the plateau is 45/sec. The physical location of these counters in the immediate vicinity of so much material makes interpretation of these rates questionable.

   Since, however, the rate of A_1 bears rather closely the ratio to $A_1 + A_2$ as would be expected for a non-multiplying hemispherically symmetrical flux, it may be inferred that the bursts do not contain <u>both</u> a great number of particles <u>and</u> a wide angular spread.

Cosmic Ray Film Experiment

On four flights, thick-emulsion alpha-particle film has been flown in an attempt to record cosmic ray "stars" at high altitudes. These "stars" are tracks in the emulsion of the film made by several nuclear particles diverging from a single point of origin. The number of stars, as well as the number of particles (having much higher energies than those produced by laboratory nuclear reactions) increases rapidly with altitude. Points of particular interest were considered to be the frequency of occurrence of stars at high altitudes and the length of the tracks in high altitude stars.

It was realized that since the V-2 spends such a relatively short time in flight that the chances of recording stars would be small, but it is felt that the experiment should be tried, especially considering the small expense, space, and amount of instrumentation involved. The film has been recovered from only one flight, that of December 17, 1946. In this flight six packets of Eastman thick emulsion alpha particle film were dipped in paraffin and inserted in a cassette made of one-eighth inch steel, which was installed in the control compartment of the V-2.

No significant cosmic ray data have thus far been obtained by the film method.

Cosmic Ray Altitude Meters

The intensity of cosmic rays at altitudes up to 70,000 feet has been extensively investigated by means of ionization chambers and Geiger counters carried aloft by balloons. The curve shown in Fig. 52 exhibits typical data obtained with a single counter about one inch in diameter and six inches long.

It was proposed that if a wide-angle cosmic ray telescope having large counting volume were installed in an airplane the statistical fluctuations of the counting rate could be reduced sufficiently so that a counting-rate meter could be used to indicate altitude in the region from 15,000 to 50,000 feet. Such an instrument, constructed by APL and consisting of two trays of five Geiger counters, is illustrated in Fig. 53. The counters were connected in a conventional double coincidence circuit of the Rossi type. The output pulses were shaped by a thyra-

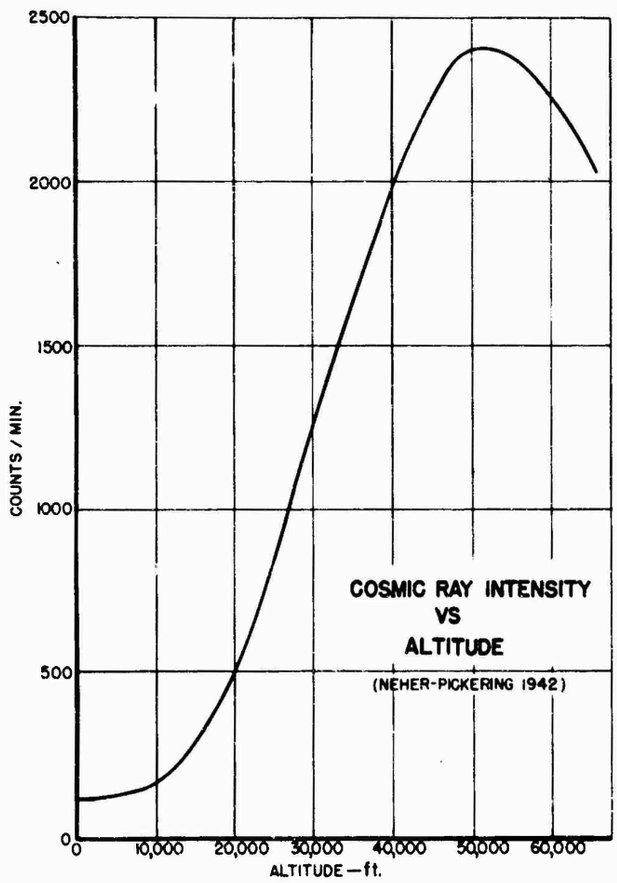

FIG. 52 Cosmic Ray Intensity vs Altitude

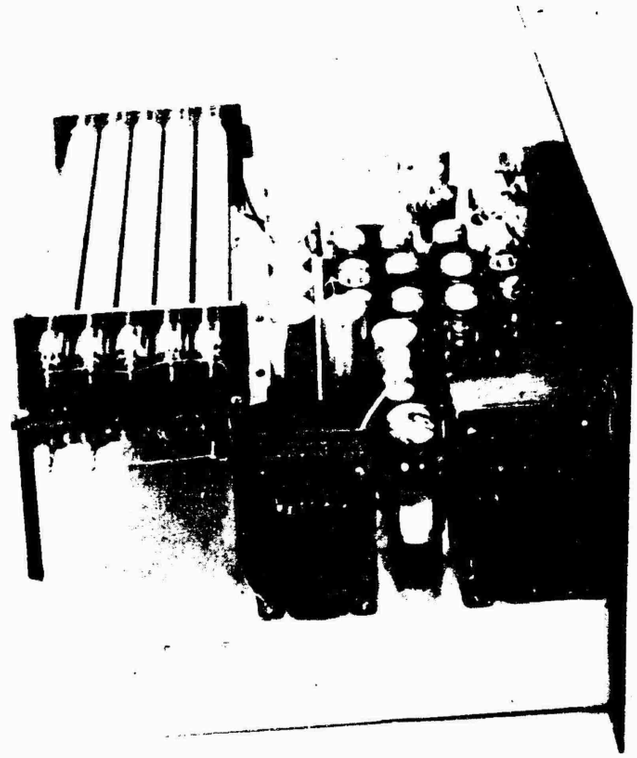

FIG. 53 Cosmic Ray Altimeter

tron and fed to a vacuum tube voltmeter as an integrating instrument. The reading on the meter, then, served to indicate altitude. Circuit diagrams of the cosmic ray and associated power supply circuits are shown in Figs. 54 and 55. Provision is made for zeroing the vacuum tube voltmeter. During flight the zeroing is checked and correction made in the meter reading for any drift that may occur in the zero setting.

A system for quickly testing the operation of the Geiger tubes was included in the instrument design. A radium source was located near the tubes. A switch shown in the circuit diagram allowed the total counts occurring per unit time in each tray to be measured. If one tube was not operating the background counting rate would be appreciably reduced. This check can be made quickly on both trays when the background count for the particular plane is known (radioactivity from instrument dials, etc., is appreciable). The radium source is not sufficient to cause spurious coincidence counts.

Only two test flights have been made with the altimeter to date. On these flights, the instrument functioned satisfactorily. Preliminary indications are that an instantaneous reading of altitude may be made with an accuracy of $\pm$ 500 feet when above 12,000 feet, and that the probable error can be considerably reduced if several readings are taken. Calibration during flight was made using a pressure type altimeter and

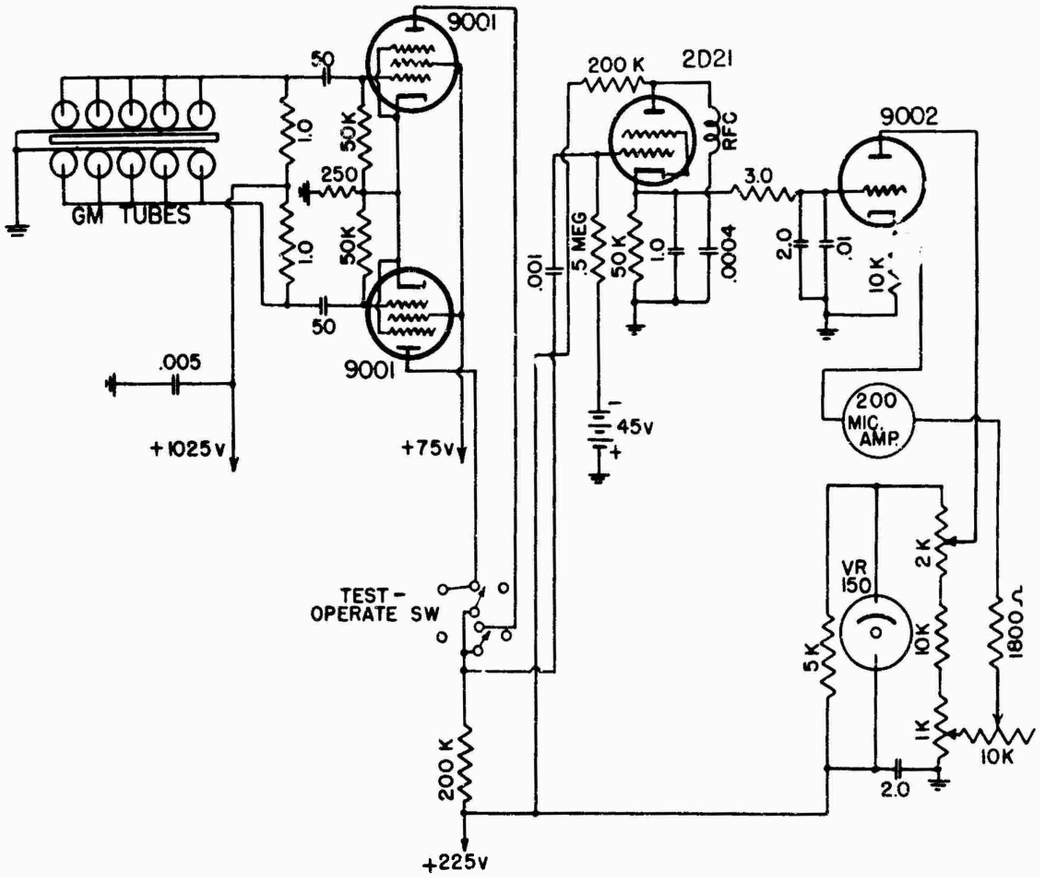

FIG. 54 Cosmic Ray Altimeter Circuit

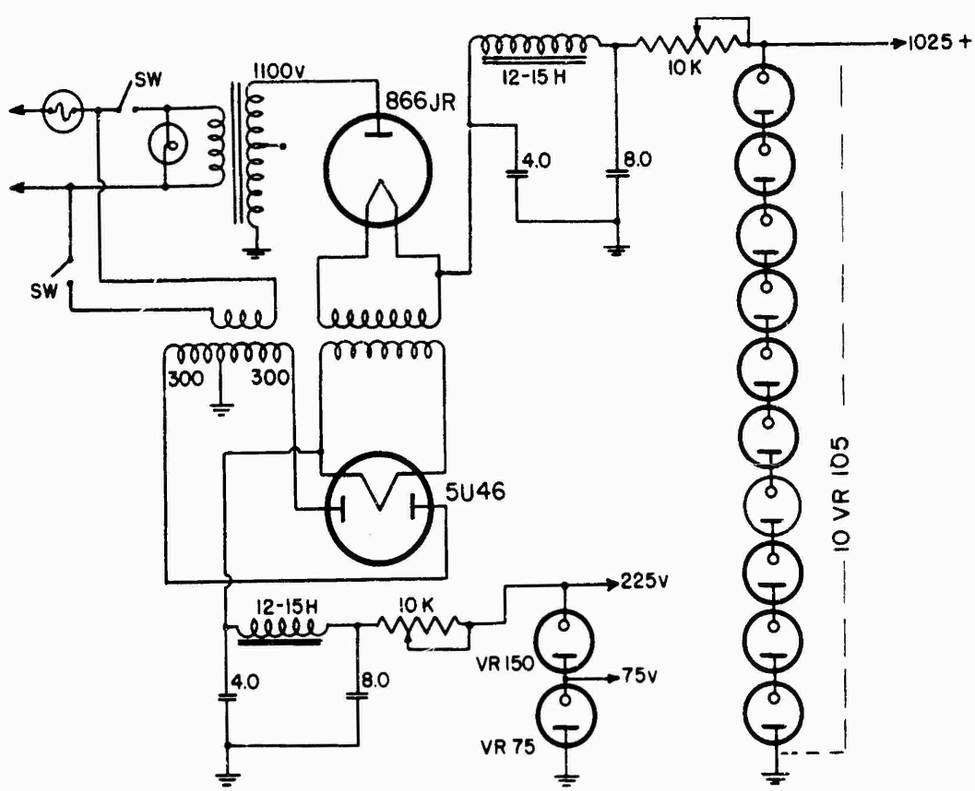

FIG. 55 Power Supply Circuit for Cosmic Ray Altimeter

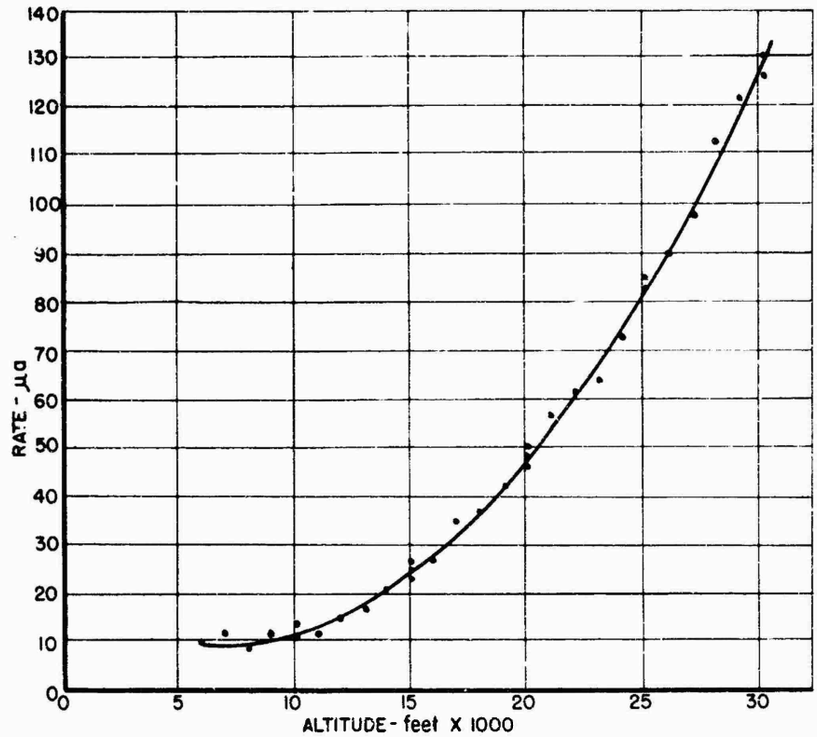

FIG. 56 Flight Calibration for Cosmic Ray Altimeter

the plane was kept within 100 feet of the desired altitude. A flight calibration is indicated in Fig. 56.

No special effort was made to make a compact unit of the experimental model shown. The size of the unit could be considerably reduced for use as a standard device. The instrument is as rugged as standard aircraft instruments.

This type of altimeter has an especial field of application to high velocity, the maneuvering missiles which are flying at high altitudes (for example, 50,000 feet). It is adaptable to the altitude control of long range supersonic missiles. Its operation is a passive one, which would not indicate pressures as would a radio altimeter. It appears, however, to offer many advantages over pressure-type instruments for application to high (40,000-100,000 feet) missiles and aircraft. It is relatively insensitive to radioactive contamination of the surrounding air.

Chapter IV

SOLAR SPECTRA OBTAINED AT HIGH ALTITUDE

The spectrum of the sun as obtained from a rocket extends much further into the ultraviolet than the same spectrum as observed from the ground or from manned or sounding balloons. The reason for this extension is that because of the selective absorption of the air the sunlight reaching the blanket of air covering the earth is different in quality from that which reaches the earth. Since, to inhabitants of the earth, the sun is the most important object in the universe, any extension of knowledge of the sun is worthwhile; also such studies may be used to give a better knowledge of the composition of the atmosphere.

The APL Spectrograph

The fully automatic APL spectrograph designed for use in the V-2 rocket features a special film cassette for protecting and preserving the film record on impact with the ground. This armored cassette is similar to that which houses the film of the 35 mm camera used in the rockets to photograph the earth, and has been found to provide complete protection to the film.

As no attempt was made to "home" on the sun in the initial flights, a special front surface aluminized diffusing reflector was used, by which all absorbing material could be eliminated between the source of light (the sun) and the photographic film. Since the gelatine of ordinary photographic film is partially opaque to the short radiations existing under the conditions of vacuum spectroscopy at altitudes such as attained by the V-2 rockets, special fluorescent film was used, which transforms invisible ultraviolet light to wave lengths long enough to penetrate the gelatine and activate the silver bromide.

The spectrograph mounted in the April V-2 rocket is pictured in Figures 57 and 58.

The spectrograph is designed to be mounted in the warhead of the rocket with the small end upward. Two cowled holes at the side of the rocket admit sunlight to the front aluminized diffusing mirrors and a plane front aluminized mirror in front of each slit of the spectrograph.

Figure 59 shows solar spectra obtained on April 1. Since the height attained by the rocket on this flight was 65 miles, spectrum (b) in the illustration was probably obtained at heights between 30 to 50 miles above the earth.

A comparison of spectra (a) and (b) shows that the solar spectrum taken from rockets reaches much further into the region of the ultraviolet than any taken from the surface of the earth. It was probably taken above any ozone layer encountered on the upward flight and, therefore, the features of the spectrum are probably not due to the atmosphere. These

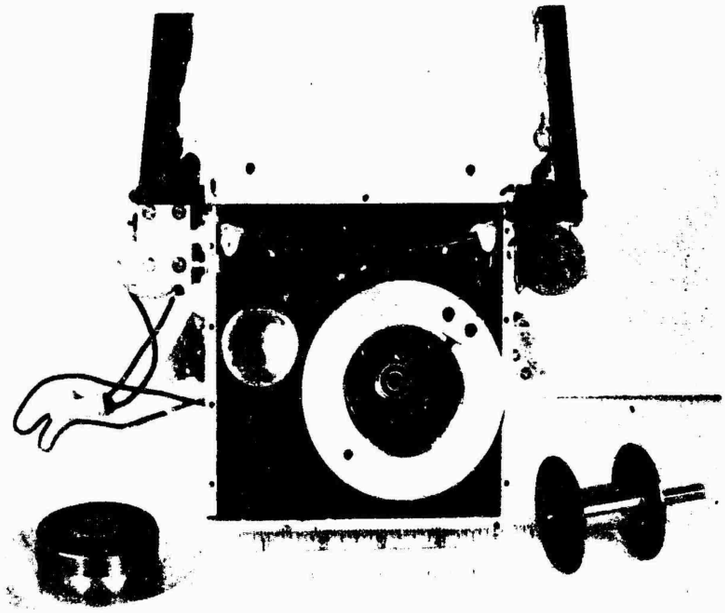

FIG. 57 Film Cassette of Solar Spectrograph

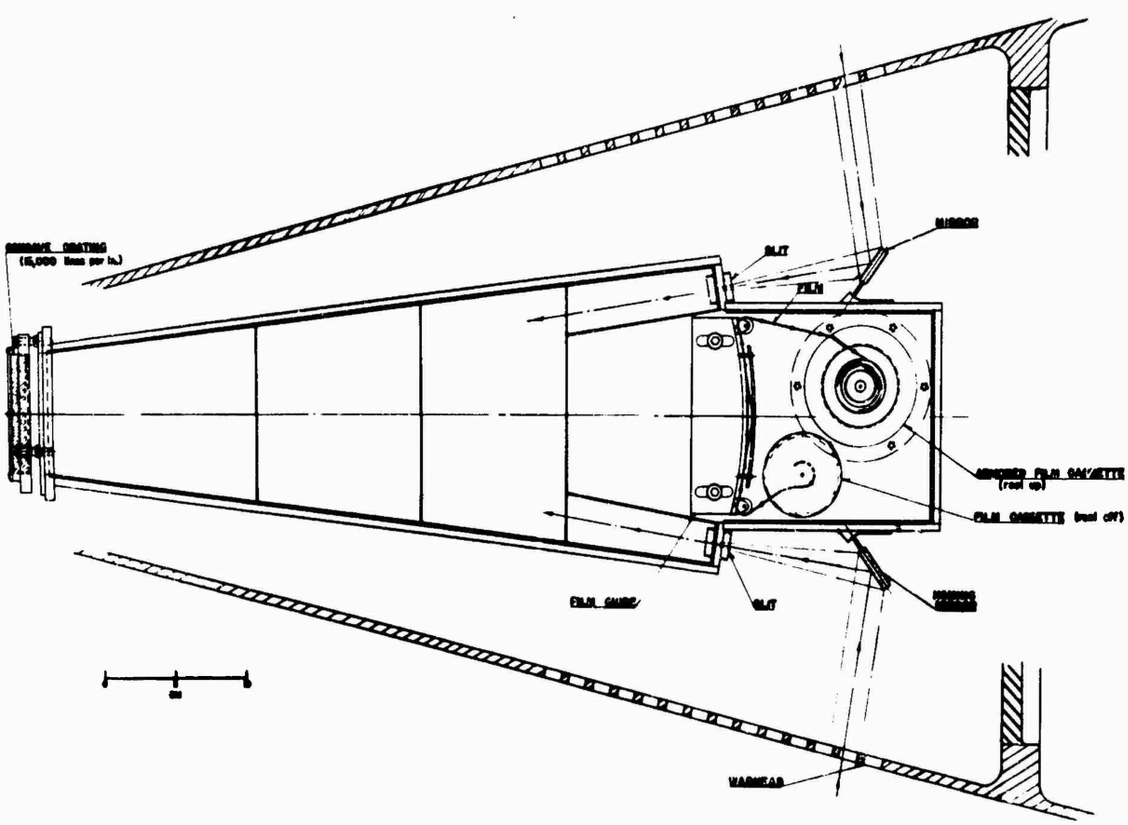

FIG. 58 Rocket-Borne Solar Spectrograph

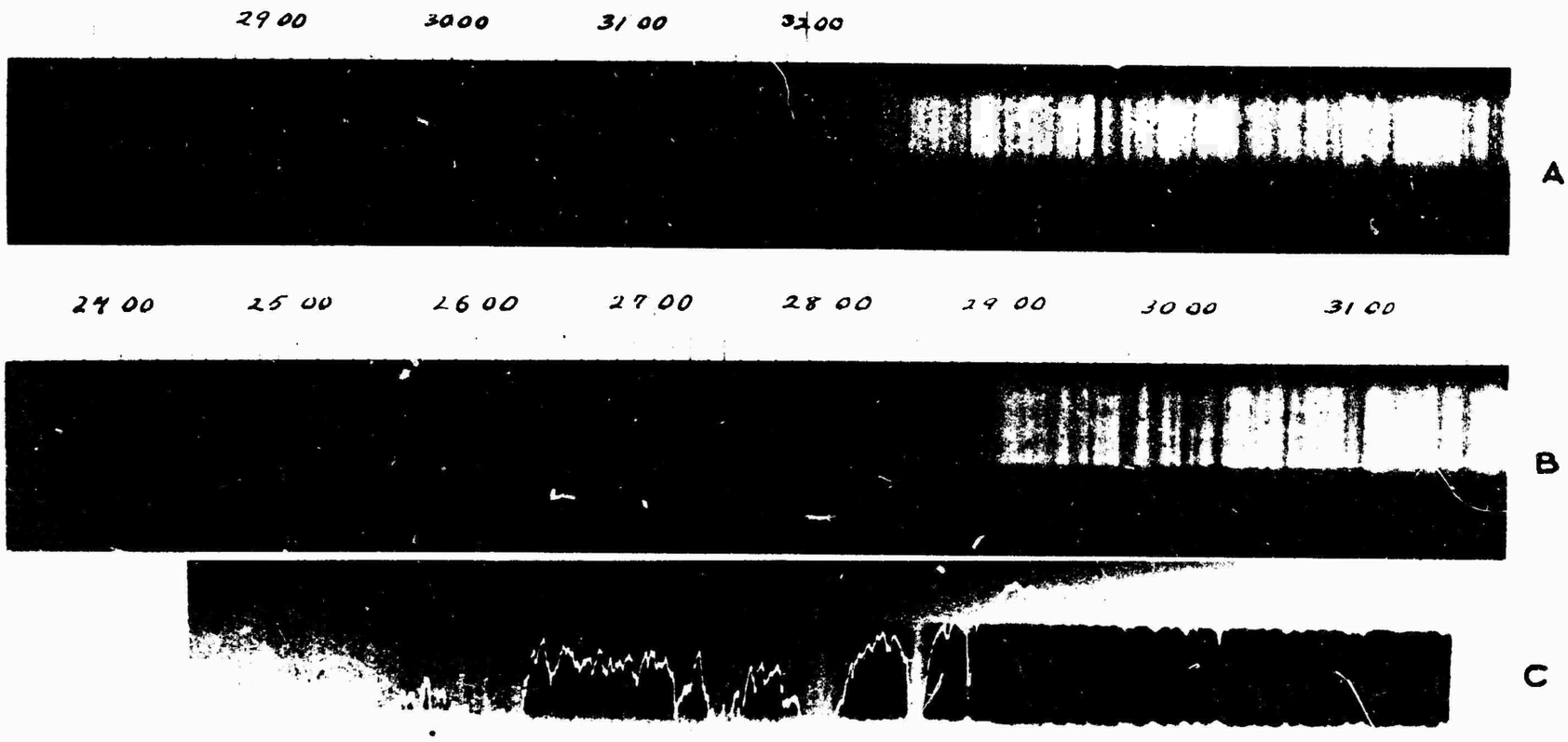

FIG. 59 Solar Spectra Obtained During April 1, 1947 Flight of V-2

A. Solar Spectrum from V-2 on Ground.
B. Solar Spectrum from V-2 at height of 50 miles.
C. Microphotograph Tracing of Spectrum B.

features of the sun (Fraunhofer lines) and the continuous spectrum are now being studied.

Yerkes Observatory Spectrograph

A spectrograph using a crystal-quartz optics thoughout, was designed and constructed at the Yerkes Observatory of the University of Chicago under a subcontract; it was also installed in the rocket for the April 1 flight. The purpose of the experiment, under the direction of Dr. Jesse L. Greenstein, was to study the solar spectrum on moderately high dispersion in the region from 3100 to 2200 Angstroms. In view of the other work being done to extend the solar spectrum to the far ultraviolet, the Yerkes Observatory experiment was limited to these quantitative studies on higher dispersion in the near ultraviolet.

A special collimator and identical camera lens consisting of two quartz menisci was designed to give high resolution. The focal ratio was about f/10. The dispersion, on a tilted and curved focal surface, was 10 Å/mm at 2300Å.

The spectrograph was provided with a plane mirror between the slit and the collimator to fold the light path. The film, measuring 5 x 14 inches, was mounted on a rotor housed in a heavily-armored cassette made of duralumin. The unit was designed for one exposure, the rotor, after launching, being driven 180 degrees by a 24-volt motor in order to expose the film. After an exposure of four minutes, and before warhead blow-off, the rotor was to be turned another 180 degrees to a locked position. The exposure cycle was regulated by the electrically-driven timer mounted in the control compartment together with a 24-volt battery in a pressurized case. The complete spectrograph was approximately 18 x 36 x 6 inches and weighed almost 100 pounds including timer and batteries.

Since only one exposure was planned, provision was made for obtaining several spectra simultaneously on the one film. An aluminized, quartz step-reducer was placed in front of the film. This reducer had transmissions of approximately 100, 20, 5, and 1 per cent, so that the light through three of the four parts of the length of the slit was reduced. The film was 20 mm high; each spectrum was thus 5 mm in height. Such a step-reducer can be calibrated in the laboratory to obtain its transmission as a function of wave-length. Color-temperature calibration exposures were obtained before flight by using a water cooled controlled continuous hydrogen arc run at known voltage and amperage. This source has a relatively high color temperature, is moderately stable, and can be checked against a standard lamp, if required.

A photograph of the Yerkes spectrograph as installed in the motor section of the rocket is shown in Fig. 60. The slit was covered by a protective plate at the time the picture was made. A ground quartz plate four inches square was set in the skin of the rocket to diffuse the incident light. Laboratory tests showed that the solar spectrum diffused

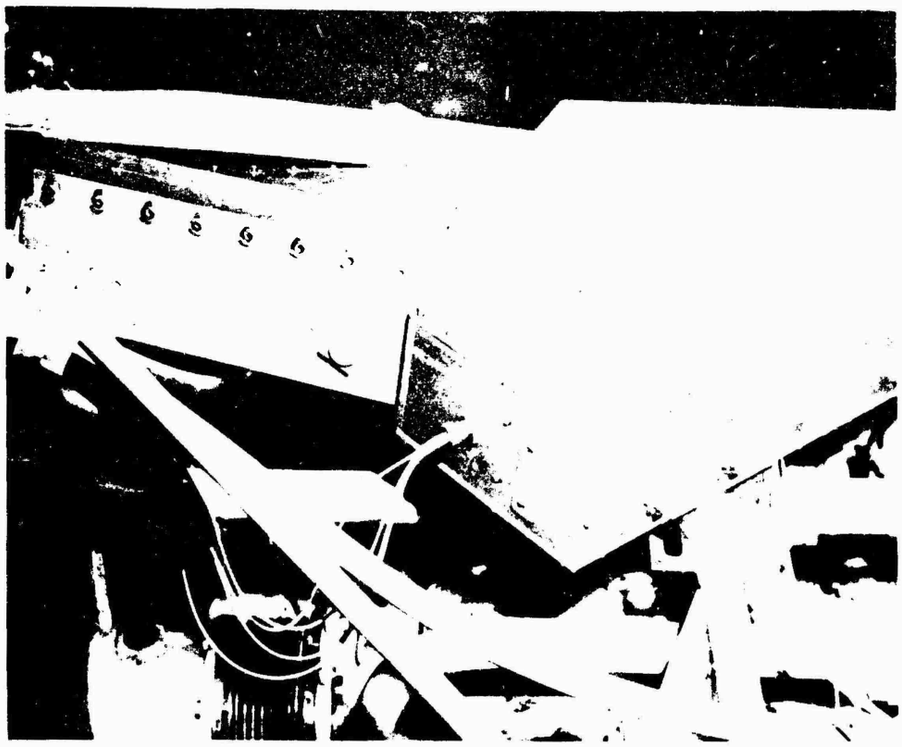

FIG. 60 Yerkes Solar Spectrograph Installed in V-2

by such a plate was recorded in about one second on the ground at 3300. Since the atmospheric absorption at 3300 Å is considerable, it was thought probable that a one-third second exposure at high altitude would give a reasonably good spectrum at 3300Å. Theoretical investigations suggest that because of heavy line-absorption in the ultraviolet, the sun would behave like a black-body of color temperature 4900° C rather than like one at 6000°C. Even at this low color temperature, a four-minute exposure through the diffusing screen should be sufficient to record the spectrum to about 2300 Å at high altitude.

The instrument was tested, focused, and calibrated at the Yerkes Observatory and tested with the timer and batteries on the shake table at APL. During the test, the plane mirror was optically deformed and had to be replaced. All other parts operated satisfactorily.

After the flight the cassette was recovered essentially undamaged, although it had sheared off the case of the spectrograph, cutting eighteen 1/4-inch steel screws. The film was undamaged, but unexposed. An analysis of the telemetering record, made by APL shows fairly conclusively that the batteries and timer operated according to schedule. The timer, which was to have turned on the spectrograph at about 60 seconds after launching, was found to have performed its function; however, at that time the telemetering record should have shown a two-second record, whereas the indication showed about a 60-second interval, indicating that the take-up mechanism failed to rotate. The timer again operated near the end of the flight on schedule, and again the spectrograph motor did not operate.

When the cassette was recovered, the take-up rotor was found in its initial position. The failure of the instrument was not electrical in origin, and the operation of the spectrograph motor had been checked repeatedly with the instrument in place of the rocket.

There are two possible explanations for the failure: (a) the actual motor being different and more powerful than the one tested on the shake table, may have proved defective under the accelerations of the flight, or (b) the starting acceleration may have locked the rotor due to a deformation of the entire spectrograph. Such a deformation might arise from the difference between the shape of the rocket structure in the horizontal unstressed position, and in the vertical flight position.

It is possible that this experiment may be repeated on a later flight. Work is already in progress at the Yerkes Observatory, however, on another experiment. Optical parts have been completed for a low dispersion spectrograph using fused quartz components. This instrument is to be proved with three ultraviolet electron-multiplier phototubes (type 1P28); it is designed to record, via telemetering, the energy distribution of three wave lengths in the solar spectrum during flight. The photocells will be placed at 3400 Å, 2800 Å, and 2500 Å. Because of the high speed of the telemetering system, measurements of solar intensity and, therefore, of atmospheric transmission, can be obtained at intervals of approximately 1 kilometer of altitude. A knowledge of the ozone distribution with such relatively short intervals between measurements should be of great value.

Chapter V

HIGH ALTITUDE PHOTOGRAPHY OF THE EARTH

From the V-2 rocket launched October 24, 1946, a motion picture film was obtained which yielded photographs of creditable quality from launching to the peak of flight at 345,000 feet. This film when projected, presents a striking picture of the earth as viewed from a rapidly ascending rocket. Several frames are reproduced in Figs. 61, 62 and 63.

At peak altitude, about 65 miles, the camera photographed the horizon 720 miles away. The picture, first of its type ever made, shows the curvature of the earth, as well as some 40,000 square miles of territory. Landmarks such as rivers, lakes, and mountain ranges have been identified, and form the basis of the first unquestioned data on the angular motion of the V-2 rocket in the upper portion of its trajectory; this is discussed more fully in Chapter VI. The results of this test suggest the use of rocket photography in the study of widespread meteorological conditions as well as in long-range aerial reconnaissance.

The series of pictures made on that flight are the only ones to be obtained by APL to date. No camera was included in the December 17, 1946 flight which was a night firing, and the camera installed in the April 1, 1947 flight was not recovered. On the April 8, 1947 flight, the film was unfortunately exposed prior to launching because of a last minute delay in firing.

The camera used in the October flight was a DeVry 35mm motion picture camera, shown in Fig. 64, of the type used by the Army Signal Corps for combat newsreel work, and was selected because of its relatively small size and the ease with which it could be adapted for flight operation. A small 24-volt aircraft-type motor replaced the spring motor normally used to drive the camera, and by the use of reduction gears, the speed was regulated at approximately 3 frames per second. This speed was fairly constant because of the low current drain on the four 6-volt dry-cell batteries used to operate the motor. An armored cassette described previously, shown in Fig. 57, was used to protect the exposed film during impact. Holding 50 feet of film, the complete unit was mounted in a dural box 7 x 8 x 11 inches, shown in Fig. 65.

The unit was installed in the main body of the rocket between the fuel tanks, as shown in Fig. 66. It was oriented so that the optical axis of the camera pointed down and outward, 160 degrees from the axis of the rocket. Eastman Super-XX film with a Wratten No. 25A filter was used. The shutter speed was set at 1/40 second and the lens at f:8. The camera was started by a take-off switch in the tail and ran continuously until the film was exhausted.

The camera unit was recovered a few hours after the V-2 landed and was immediately wrapped in black cloth and returned to APL. The dural box was found to be in almost perfect condition; the camera was slightly smashed but still intact, with only the lens missing. The cassette seemed to be in very good condition and the take-off shaft would still turn quite freely. No damage to the film was evident although overexposure of about 15 per cent caused a slight increase in grain size.

FIG. 61 The Earth Viewed from 140,000 ft.

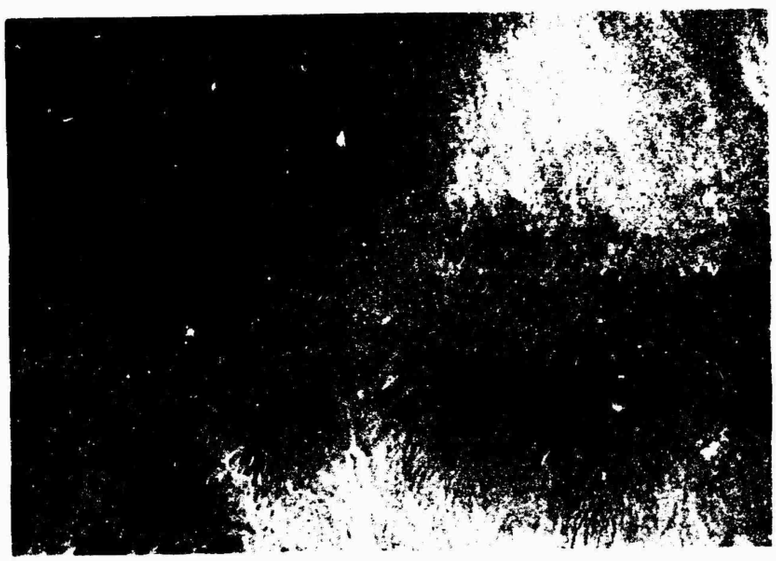

FIG. 62 San Andreas Mountains from 200,000 feet.

FIG. 63 The Earth Viewed from 65 miles

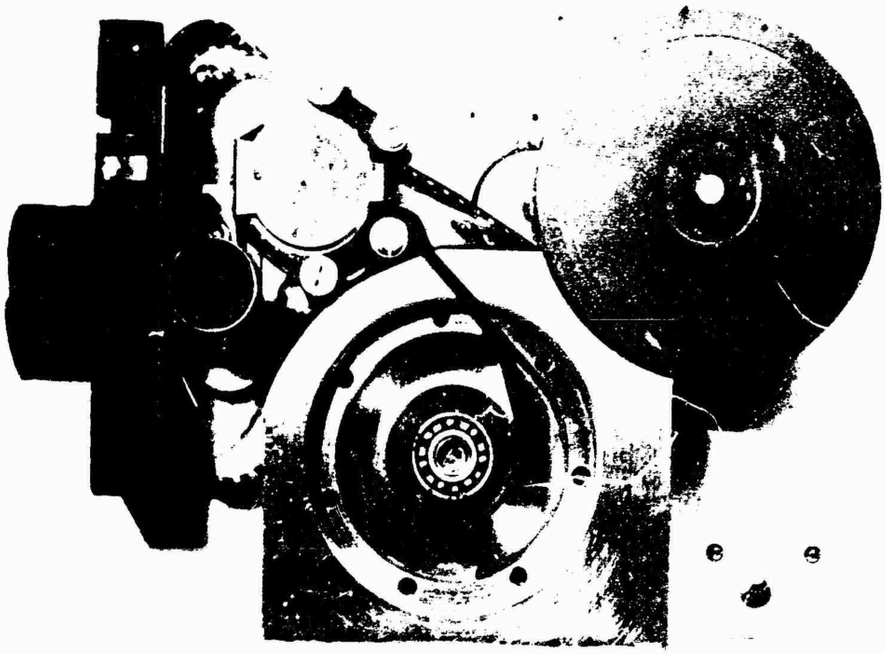

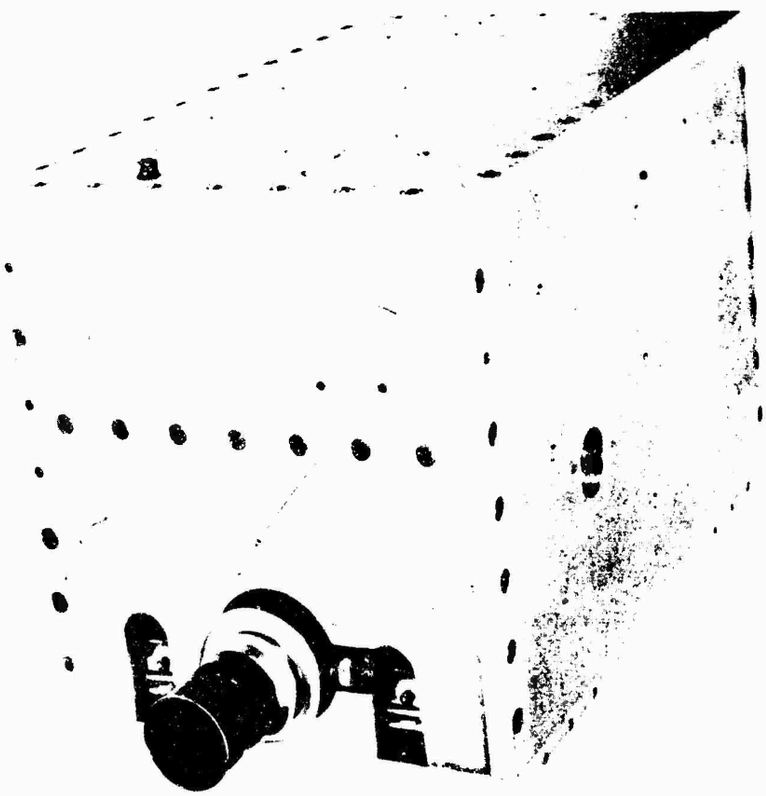

FIG. 64 Camera Used for High Altitude Motion Pictures

FIG. 65 Camera Housing

After the results of this experiment were known, it was suggested in a memorandum [8] that serious consideration be given to this technique for military reconnaissance. The following observations were contained in the memorandum:

1. With the V-2's, altitudes of 65 to 100 miles are normally obtained.

2. With sounding rockets now under advanced development (such as the Aerojet XASR-1 being built for experimental work by this laboratory under Bureau of Ordnance NOrd 9837), it is expected to achieve similar altitudes with an instrument load of as much as 150 pounds. Relative to the V-2, these rockets are very inexpensive vehicles and much simplier to service and launch. Under production conditions both expense and ease of handling will be further reduced, so that routine use in wartime would not be a matter of serious concern.

3. From an altitude of 400,000 feet, the surface of the earth to a radius of about 1000 miles is visible. Of course, it cannot reasonably be hoped to discern any appreciable detail at such distances. But even the crude results of the 24 October flight with a stock 35mm camera make it evident that objects up to about 200 miles can quite reasonably be examined, subject, of course, to absence of cloud cover. Perhaps meteorological observations might be useful even up to extreme visible range.

4. In the use of such a technique at sea, recovery of the camera would, in general, be impossible. This fact immediately suggests the possibility of televising the camera image by techniques already in existence for viewing instrument panels in test airplanes and transmitting the image to a ground station. Television transmission would no doubt sacrifice detail but might very well serve to locate an enemy fleet and provide other gross information. The information would be available immediately. Launching from a large submarine would be feasible.

5. Stereoscopic views are automatically obtained with a base length equal to the movement of the rocket between exposures.

Although the first camera was considered successful, the lack of detail of the 35mm film indicated that for future flights a larger camera and larger film should be used. Consequently, K-25 aircraft cameras were considerably altered for use in April 1947. A cassette was designed to hold 125 feet of 5 1/4-inch film, allowing three hundred 4 x 5-inch pictures to be taken at a rate of one per second. The entire unit, less batteries, measured 9 x 9 x 16 inches and weighed 75 pounds. It was mounted in the control compartment, and a 90-degree prism was required, since space considerations forced the camera to be mounted pointing upwards. (See Fig. 66)

[8] "Sounding Rockets as Vehicles for Long Range Aerial Reconnaissance", by J. A. Van Allen, dated 15 November 1946.

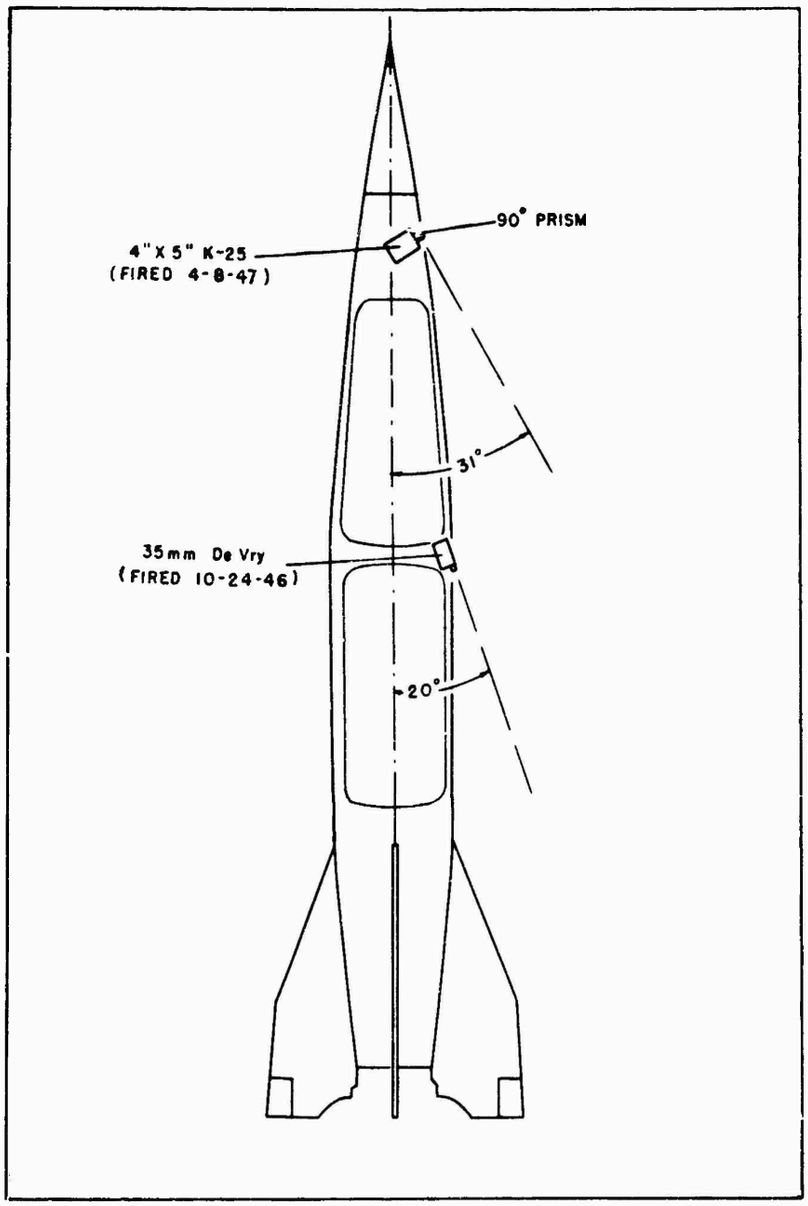

FIG. 66 Mounting of Motion Picture Cameras in V-2 for October 1946 and April 1947 flights.

Eastman Aerographic Infra-red film was used with a Wratten No. 89A filter, the combination having a peak sensitivity at about 8400 Å, which was considered to be far enough in the infra-red to penetrate most of the atmospheric haze. A small clock was placed in the camera and the time was to be recorded on the film each time a photograph was made.

On the April 1 flight the camera was recovered but had broken open on impact. The film cassette and film, however, were undamaged. As mentioned above, the film had been exposed prior to launching, so that no pictures were made in flight.

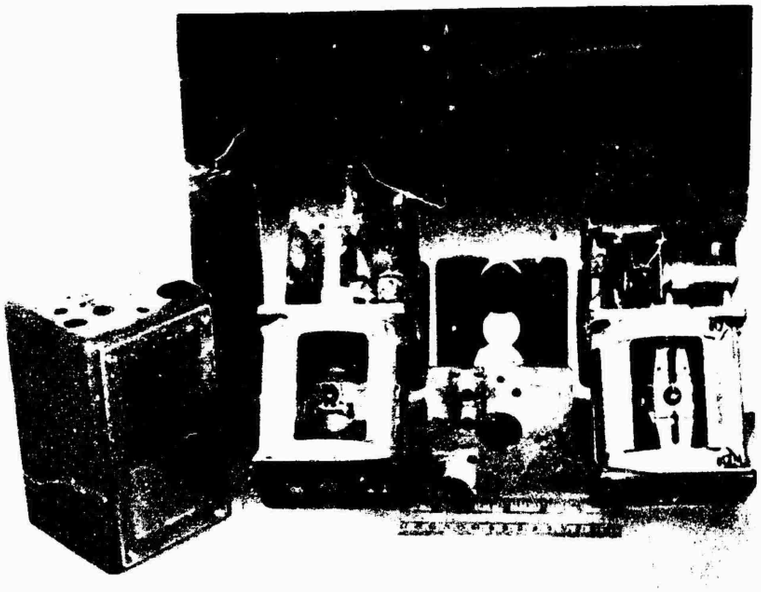

FIG. 67 Gyro Orienters Used in V-2

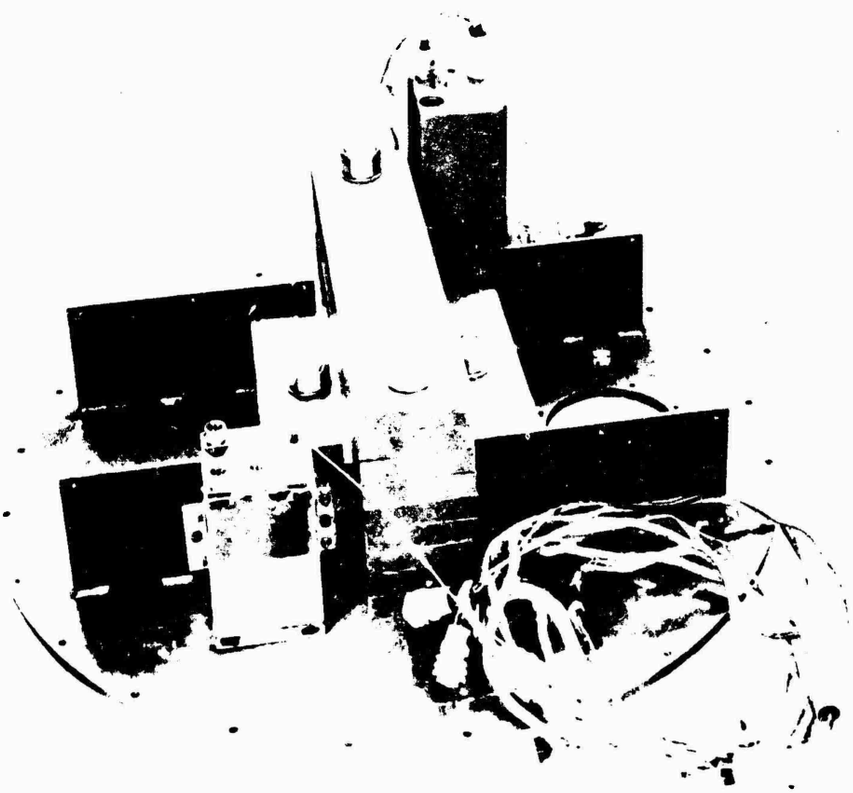

FIG. 68 Gyro Orienters Mounted on Warhead Baseplate

Chapter VI

MISCELLANEOUS V-2 EXPERIMENTS

Besides the standard measurements made on periodic flights, some incidental experiments were attempted from time to time with varying degrees of success. Among these were the computation of angular motion of the V-2 in flight, using a gyro system, photocell orientor, and earth camera; artificial meteor and smoke-puff ejection devices; and a biological experiment conducted in conjunction with the National Bureau of Health. These experiments are discussed in the following pages.

Angular Motion of the V-2 During Flight

In addition to the trajectory data furnished by the Ballistic Research Laboratory, Army Ordnance Department, it is desirable to have data indicating the angular motion of the V-2 during the entire flight. Such data are required, for example in order to measure the east-west effect of cosmic rays at high altitudes. With the exception of high-powered tracking telescopes which give information on tumbling, ground tracking instruments furnish information on the orientation of the rocket only at low altitudes. Thus, one system contained in the rocket is required to give complete information on the orientation of the missile as a function of time.

Three types of orientor equipment have been used on various flights: gyro systems, photocell orientors, and the earth camera. Useful data have been produced by the gyro systems, which have operated successfully in several flights. The photocell system, used essentially to indicate roll only, has also operated successfully and information derived from it has been found to agree with the roll recorded by the gyro system. The rocket-borne camera has yielded orientation data of outstanding reliability.

Photocell Orientor

The photocell orientor was installed in a fixed position in the rocket. Light entering the warhead through a transparent window was incident on the cell. A maximum output from the photocell would thus indicate that the photocell was pointed toward the sun. Such systems were used on the July 30, 1946, April 1, 1947, and April 8, 1947 flights. Pitch and yaw made the data thus obtained on the first flight questionable, but the data from the second trial showed good agreement with the gyro data for that flight. The photocell orientor used on the April 8, 1947 flight did not operate for reasons unknown.

Gyro Systems

The gyro system uses an electrically driven Schwien gyro, shown in Fig. 67, to drive a low-torque potentiometer with 360-degrees rotation. One gyro is installed to respond to the roll of the rocket and a second to measure the angle between the missile axis and the vertical. Thus the second, or pitch, gyro measures the sum of the pitch and the aspect of the rocket when the normal

to the shaft driving the potentiometer is in the plane of the trajectory and measures the yaw when the normal to the shaft is perpendicular to the plane of the trajectory. The pitch gyros have been aligned with the shaft lying in the east-west plane at launching and are shown mounted on the warhead baseplate in Fig. 68.

The gyros are automatically uncaged at the instant of launching as described elsewhere, so that as little precession as possible will occur during the flight. Laboratory tests indicate that normal precession in flight should not exceed three or four degrees. The potentiometer, connected to the gimbal of the gyro by a coupling spring, introduces errors of ± 3 degrees, as indicated by pre-flight tests. This error is reduced, however, when the potentiometer contact is subject to relatively uniform motion.

The outputs from the two potentiometers are multiplexed, together with three calibrating voltages—zero, half, and full. The multiplexing unit samples each voltage about four times per second. The circuit, which delivers voltages ranging from 0 to about ± 5 volts to the telemetering system, is shown in Fig. 69. The diode connected across the output holds the multiplexer output to a 6-volt level to conform with telemetering requirements.

The gyro orientor system has been used in four flights: October 24, 1946, December 17, 1946, April 1, 1947 and April 8, 1947. Although no data were obtained on the first flight, those obtained on the other flights appear to be relatively good and it is felt that roll was well determined and that freedom from tumbling and onset of tumbling are clearly shown. The gyro orientor system installed in the rocket fired on April 8, 1947 operated successfully throughout the flight. An average period of roll of 9.0 seconds was observed and a plot of revolutions versus time showed the same curvature characteristic of the April 1, 1947 flight. The accuracy of the pitch and yaw measurements was again a matter of conjecture.

Earth Camera

The details of the motion picture cameras used to photograph the earth from V-2 rockets in flight are discussed in Chapter V. Unambiguous data giving the angular motion of the rocket fired 24 October 1946 was obtained in flight by the use of this camera. A map showing a trace of the point of intersection of the camera's optical axis and the surface of the earth is presented in Fig. 70. The rate of running of the camera in flight was obtained from the angular size of objects in the camera field in conjunction with the BRL trajectory. By this analysis it was found that

$$\text{Flight time (sec)} = (1.06) + (0.303)\ (\text{Frame Number}).$$

Detailed, frame by frame, identification of the photographs was made using prominent landmarks of the United States and Mexico in order to produce the trace shown.

The camera was located in the midbody of the rocket with its optical axis in the plane through the missile axis and inclined at 160° to the nose, (See Fig. 66). The heavy line on the print shows the trace of the optical

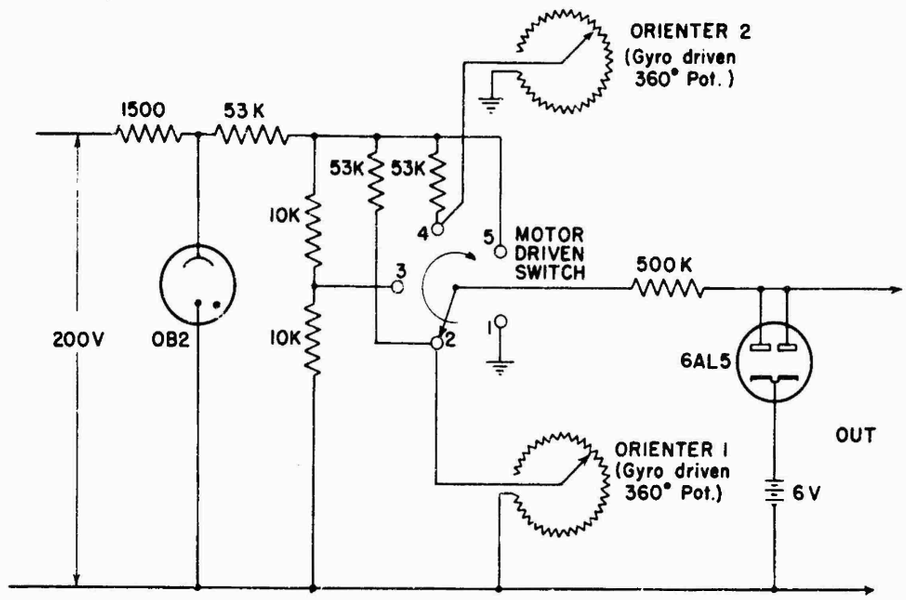

FIG. 69 Gyro Orienter Circuit

axis on the map. The vector shown at intervals lies in the intersection of the earth's surface with the plane containing the optical axis and the missile axis. The sense of the vector is outward from the missile axis through the optical axis.

Thus, a complete knowledge of the angular motion of the missile is obtained in the time interval 0 to 240 seconds, with the exception of certain gaps during which the camera field included only the sky. Incremental motion of prominent features on the terrain or in cloud banks aids the identification even over these gaps so that it is felt quite certain that the motion occurred as shown.

Artificial Meteor and Smoke Puff Experiments

Background for Artificial Meteor Experiment

New possibilities in aerodynamic research would obtain if a few grams of matter could be expelled at high altitudes with velocities comparable to these possessed by meteors. Velocity, deceleration, luminosity, and spectral measurements made on artificial meteors so produced would yield significant contributions to knowledge of the pressure, density, and composition of the upper atmosphere, as well as new information on hypersonic aerodynamics.

Various studies of natural meteors have been made in the past, particularly by the Harvard College Observatory, to determine the density, and, hence, the temperature, of the atmosphere in the range from 35 to 70 miles. The results of these studies were found to be in substantial agreement with the experimental V-2 results obtained by NRL on it October 10, 1946 flight. Thus, it is felt

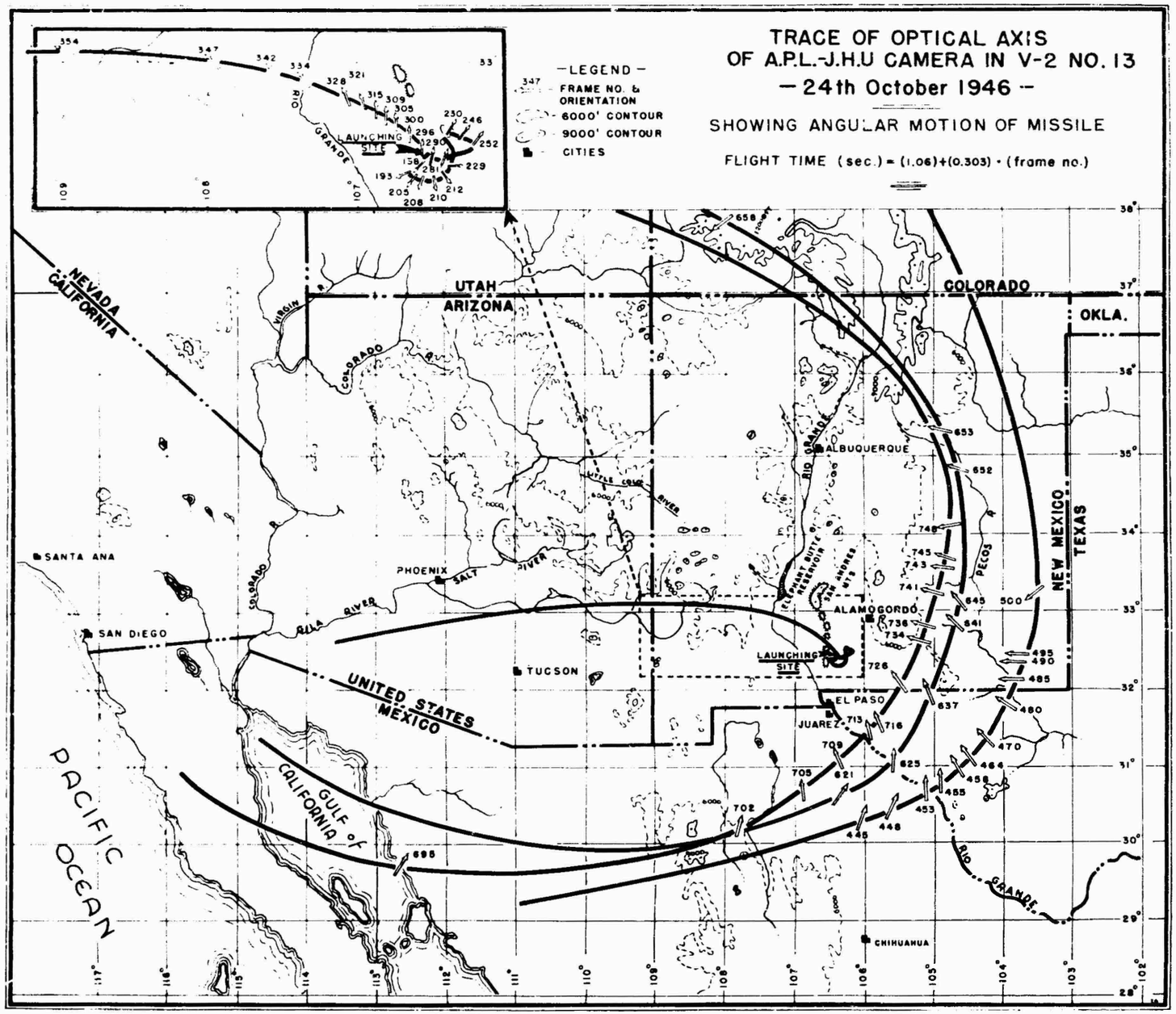

FIG. 70 Trace of Intersection of Camera Optical Axis and Surface of Earth - From Flight of V-2, October 24, 1946.

that the natural meteor ballistics and consequent determinations of air densities by the meteor method are reliable. The method, however, is now of little use above approximately 70 miles because natural meteors rarely appear at these altitudes and because the air densities are so low at these greater altitudes that decelerations cannot be measured.

Since the jet from a standard shaped-charge rifle grenade has a velocity comparable to the lower range of meteor velocities, it was hoped that if grenades of this type were launched from a V-2 rocket at an altitude of 100 miles or more, artificial meteors might be produced. Matter ejected with sufficiently high velocity would be essentially a low-density meteor and could be treated as a meteoritic body even though the material would probably be in a dust-like or gaseous state. Such a device for propelling matter at great velocities could extend the results obtained from the previous studies of meteors to increased heights and could provide greatly increased precision of individual measurements because the mass of the meteoric body would be known.

At low altitudes, a measurement of any one of the three quantities --- temperature, density, or pressure --- alone serves to determine the other two. Because of the dissociation of O_2 at approximately the 70 mile level, however, the mean molecular weight of the atmosphere changes appreciably and the addition of this new variable to the problem requires that two of the quantities be measured to determine the third.

Direct pressure and temperature measurements have been made by other agencies along the V-2 trajectory, but the interpretation of the measurements is complicated by the unknown effect of dissociation of the atmosphere on measurements utilizing ionization technique. Velocity of sound methods of measuring air temperatures by explosions from the V-2 are not expected to operate to altitudes above about 50 miles nor are air sampling methods, because of the extreme tenuousness of the atmosphere (less than one-millionth of sea level density). Auroral methods and ionospheric methods, on the other hand, have yielded data to much higher levels.

The meteor method would be an aid for the proper interpretation of the pressure and temperature measurements made by the other groups, and would give, as well, independent data on the physical properties of the upper atmosphere.

Equipment

Considerable thought was given to the problem of propelling matter with a velocity high enough to be in the range of meteor velocities. The shaped-charge rifle grenade was chosen for the preliminary experiment because it propels matter faster than any other standard ordnance equipment of suitable size. When exploded, the conical metallic cavity liner is collapsed and squeezed radially inward by the hydrodynamic pressure of the detonating explosive, thereby adiabatically heating the "slug" and causing plastic forward extrusion of a thin "wire", which fractures into a stream of particles having a velocity of about 30,000 feet/second (Fig. 71). It was realized that the mass of the matter propelled would be small and the velocity lower than desired, but it was felt that the shaped-charge grenade would be suitable for trial. The experiment involved the design, manufacture, and installation of time fuzes for the grenades, and

FIG. 71 Stream of Particles Produced by M9A1 Grenade

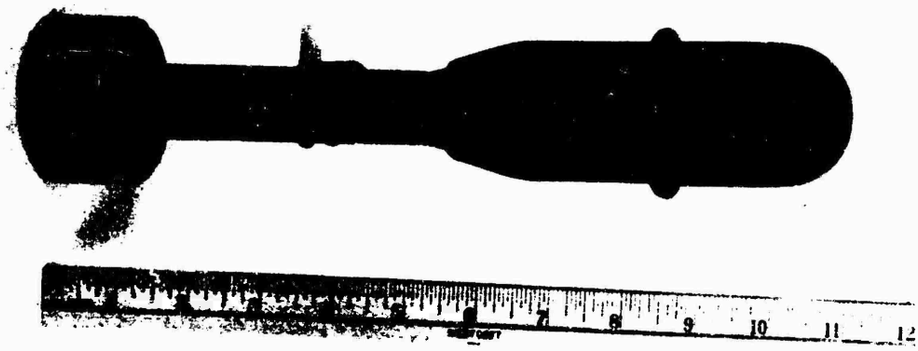

FIG. 72 M9A1-Grenade

suitable launching equipment to clear the grenades from the V-2 rocket before exploding. The work of carrying out this experiment was done by the New Mexico School of Mines with material furnished by the Army Ordnance Department. The time fuzes used were adaptations of the Mk 244 Mod 1 bomb delay element, which gave a time delay of 4.10 to 4.92 seconds.

Modification of the M9A1 grenade shown in Fig. 72 are detailed in Fig. 73 and include a holder for the delay element, a firing pin, and spring. A pull-out pin which was removed when the grenade was installed in the launcher, kept the firing pin in a safe position during handling. The launching force ignites the delay train by driving the firing pin against the pin in the element.

Launching equipment was derived from the standard Army M7 launcher. The standard 30 cal. M-3 grenade cartridge was used to supply the launching force. The cartridge was, in turn, fired by a ND-24 cannon primer. Firing was initiated by a motor-driven timer.

Smoke Puff Experiment

The first installation of the launching equipment (Fig. 74) was made in the V-2 rocket fired on October 24, 1946. Black powder charges were substituted for the shaped-charge grenades as other arrangements had not been completed for the artificial meteor experiment. All equipment functioned as planned. The black powder smoke puffs were observed at about 75, 85, and 95 seconds time of flight (at altitudes of about 100,000, 160,000, and 200,000 feet). The photo-theodolites yielded good photographs of the smoke puffs which were also seen by naked-eye observers at a distance of 20 miles. This test was made to prove-in the ejection equipment for the meteor experiment, but also served to demonstrate a method for study of air currents at the high altitudes by means of black powder smoke puffs.

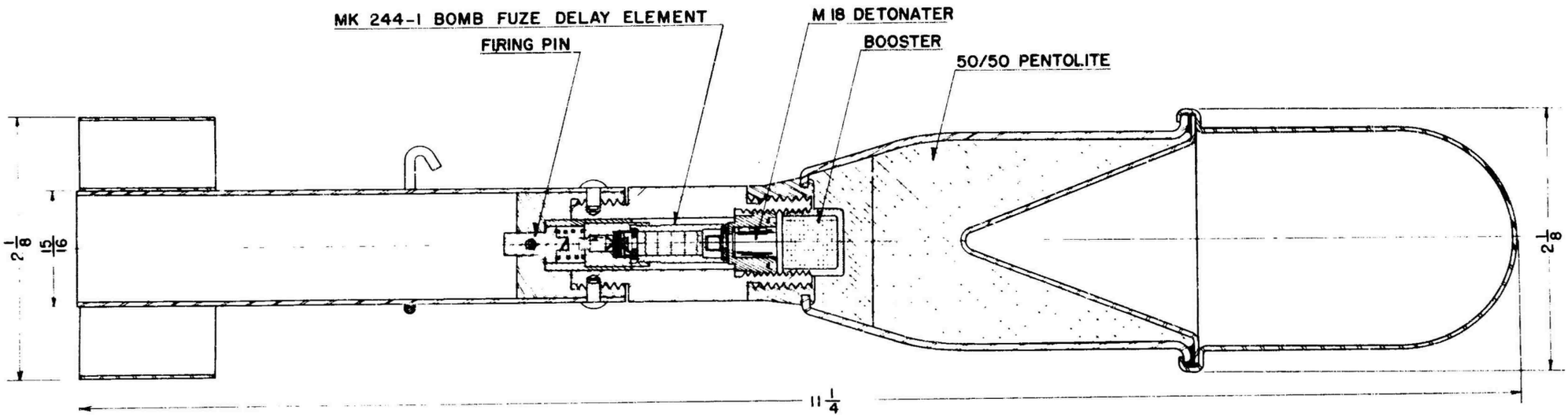

FIG. 73 Modified M9A1 Grenade

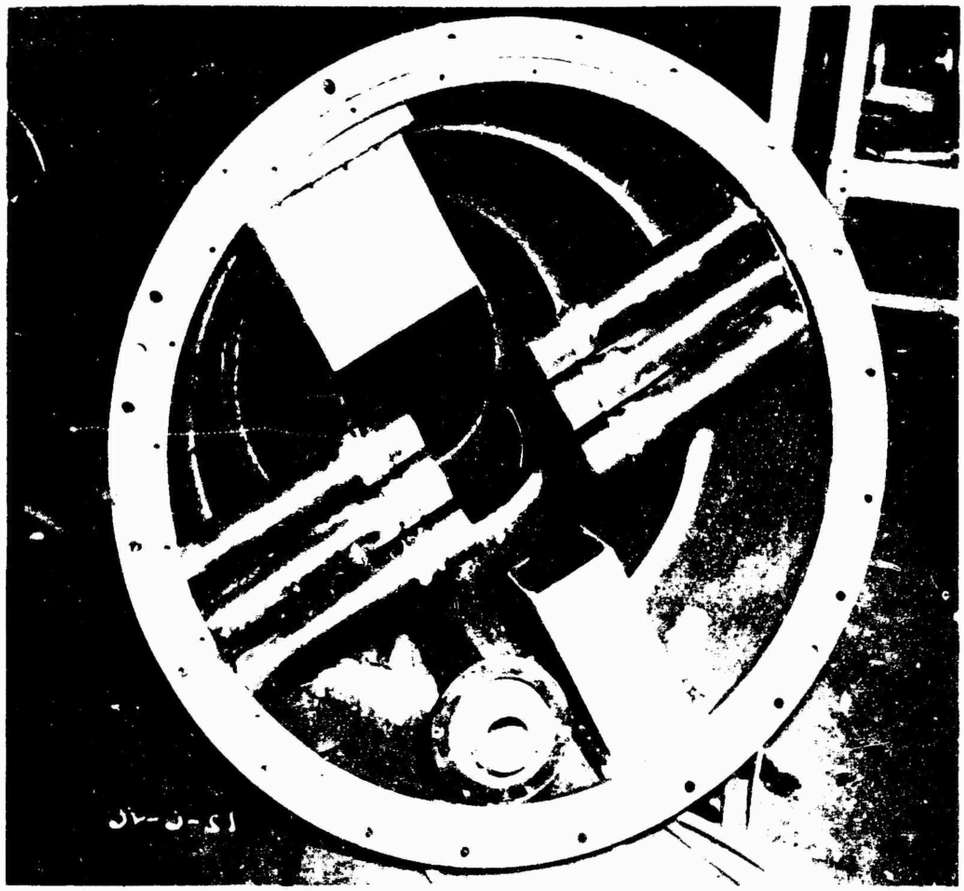

FIG. 74 Launching Equipment for Smoke Puff Experiment

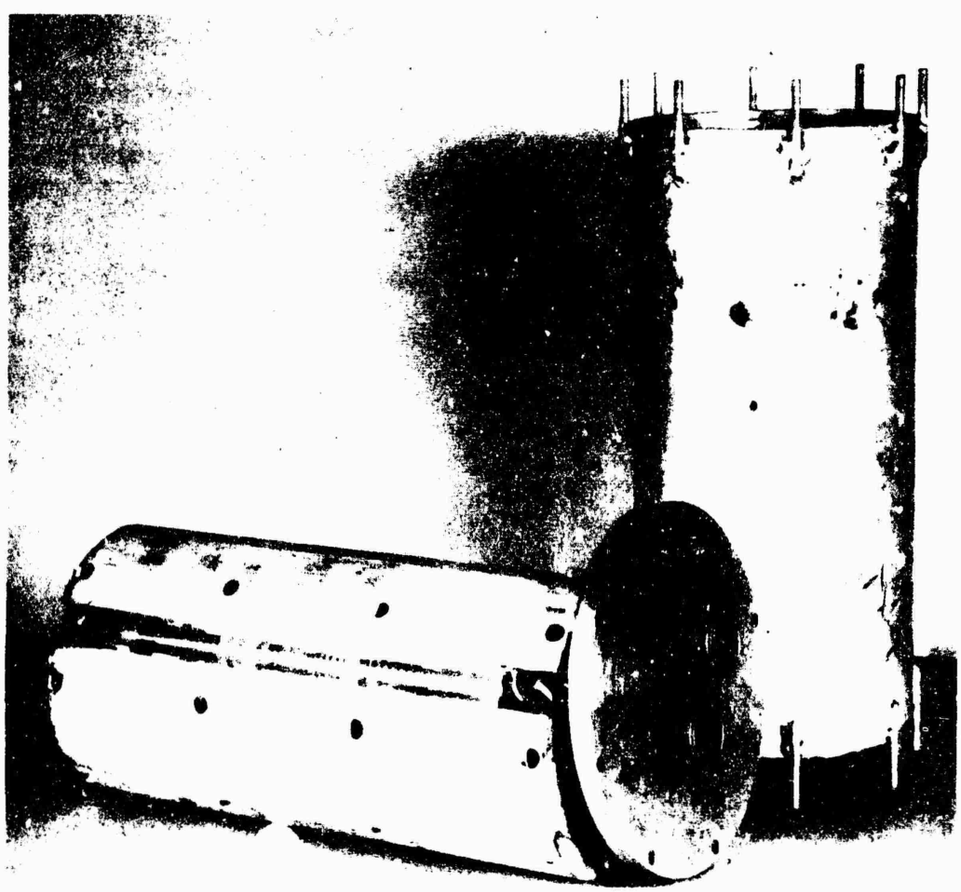

FIG. 75 Fungus Spores in Lucite Cylinder Mounted in Recorder Case

An attempt has been made to analyze the black powder smoke puffs to obtain wind velocities at high altitudes. The black powder bursts (being of low order detonations) gave streamers of smoke rather than localized puffs; however, indications of high wind velocities were obtained but the nature of the streamers did not permit thoroughly reliable conclusions.

Artificial Meteor Experiment

Equipment, identical with that used on the October 24, 1946 flight, was installed in the V-2 fired on December 17, 1946. The launching was made at night. The outcome of the artificial meteor experiment has never been clearly determined. One observer using Navy binoculars reported seeing a streak of light originating from the missile. Neither of the missile-borne cameras, the rotating shutter cameras of the Harvard Observatory group, nor the cameras of the California Institute of Technology group revealed operation, however. Although there is considerable doubt that the action could have been seen from the ground without extremely good telescopic equipment with large apertures, it seems more probable that the jet charge ejection system failed in flight. It will be remembered that on this flight, warhead blow-off, initiated by the same timing device which controlled the launching of the grenades, did not function properly, separation occurring at 446 seconds instead of at the planned 330 seconds.

Subsequent ground firings indicated, however, that these shaped charges are rather too feeble to be useful for very high velocity work.

Development of higher velocity charges, therefore, seems necessary for the successful conduct of these experiments.

Biological Experiment

An experiment was conducted to determine in a preliminary way whether the cosmic rays, or other phenomena of high altitude, had any unusual effects on the growth and mutation of fungus spores. Spores having a short life cycle were provided by the National Institue of Health, and were flown on December 17, 1946.

The spores were contained in five cylinders of lucite. Three of these were installed in a groove in the wood packing of the recorder case. The installation in the recorder case is shown in Fig. 75. The remaining two lucite cylinders were attached at other points in the warhead. One cylinder of spores was retained on the ground as a control sample for the experiment. The cylinders containing the spores were unfortunately not recovered.

ILLUSTRATIONS USED IN THIS REPORT

WERE SUPPLIED BOTH BY THE NAVAL

UNIT AT WHITE SANDS PROVING GROUNDS

AND THE APPLIED PHYSICS LABORATORY.