ARCHIVE COPY
DO NOT LOAN

AEDC-TR-66-51

EXPERIMENTAL INVESTIGATION OF STAGED PUMPING TECHNIQUES FOR THE REMOVAL OF ROCKET EXHAUST GASES FROM SPACE SIMULATION CHAMBERS

W. G. Kirby and B. A. McCullough

ARO, Inc.

June 1966

PROPERTY OF U. S AIR FORCE
AEDC LIBRARY
AF 40(600)1200

Distribution of this document is unlimited.

PROPERTY OF U.S. AIR FORCE
AEDC TECHNICAL LIBRARY

AEDC TECHNICAL LIBRARY
5 0720 00031 2548

AEROSPACE ENVIRONMENTAL FACILITY
ARNOLD ENGINEERING DEVELOPMENT CENTER
AIR FORCE SYSTEMS COMMAND
ARNOLD AIR FORCE STATION, TENNESSEE

TECHNICAL REPORTS
FILE COPY

NOTICES

When U. S. Government drawings specifications, or other data are used for any purpose other than a definitely related Government procurement operation, the Government thereby incurs no responsibility nor any obligation whatsoever, and the fact that the Government may have formulated, furnished, or in any way supplied the said drawings, specifications, or other data, is not to be regarded by implication or otherwise, or in any manner licensing the holder or any other person or corporation, or conveying any rights or permission to manufacture, use, or sell any patented invention that may in any way be related thereto.

Qualified users may obtain copies of this report from the Defense Documentation Center.

References to named commercial products in this report are not to be considered in any sense as an endorsement of the product by the United States Air Force or the Government.

EXPERIMENTAL INVESTIGATION OF STAGED PUMPING TECHNIQUES FOR THE REMOVAL OF ROCKET EXHAUST GASES FROM SPACE SIMULATION CHAMBERS

W. G. Kirby and B. A. McCullough
ARO, Inc.

Distribution of this document is unlimited.

AF - AEDC
Arnold AFS Tenn

FOREWORD

The research presented in this report was sponsored by the Arnold Engineering Development Center (AEDC), Air Force Systems Command (AFSC), Arnold Air Force Station, Tennessee, under Program Element 62405184, Task 695001.

The research presented was obtained by ARO, Inc. (a subsidiary of Sverdrup and Parcel, Inc.), contract operator of the AEDC under Contract AF 40(600)-1200. The research was conducted from January 1, 1963, to March 1, 1964, under ARO Project No. SW2302, and the manuscript was submitted for publication on February 16, 1966.

This technical report has been reviewed and is approved.

Eules L. Hively
Chief, Propulsion Division
DCS/Research

Donald R. Eastman, Jr.
DCS/Research

ABSTRACT

Results of an experimental investigation conducted to determine the feasibility of using titanium gettering to remove large flows of H_2 gas and of combining gettering and cryopumping in a staged pumping system to remove simulated rocket exhaust gases are presented. The staged pumping system (about 8 in. in diameter and less than 30 in. long) consisted of a 77°K cryopumping stage, a 20°K cryopumping stage, and a titanium gettering stage with 77°K surfaces. High temperature combustion exhaust gas mixtures, with flow rates up to about 0.3 gm/sec, were pumped, and a pressure level of about 10^{-3} torr was maintained.

CONTENTS

		Page
	ABSTRACT	iii
I.	INTRODUCTION	1
II.	APPARATUS	1
III.	PROCEDURE	5
IV.	RESULTS AND DISCUSSION	5
V.	CONCLUSIONS	14
	APPENDIX I	15
	REFERENCES	17

ILLUSTRATIONS

Figure		
1.	Basic Test Cell	19
2.	Nozzle Flow System	20
3.	Gas Flow Heater Unit	21
4.	Schematic of Pumping Configuration Employed in Phase 1 Tests	22
5.	Titanium-Tungsten Filaments	23
6.	Three-Stage System for Rocket Products Removal	24
7.	First Stage of the Three-Stage System	25
8.	Calculated Characteristics of Expanding Jet	26
9.	Second Stage of the Three-Stage System	27
10.	Cell Pressure Time History Produced by Titanium Gettering on 77 and 20°K Surfaces	28
11.	Titanium Gettering of Room Temperature H_2 Gas on 77°K Surface	29
12.	Titanium Gettering of Room Temperature N_2 Gas on 77°K Surface	32
13.	Titanium Gettering of Room Temperature H_2-N_2 Gas Mixture on 77°K Surface	33
14.	Pressure versus Time for Operation of the First Stage of the Three-Stage Pumping System	34

Figure		Page
15.	Pressure versus Time for Operation of the First and Second Stage of the Three-Stage Pumping System.	35
16.	Pressure versus Time for the Operation of the Three-Stage Pumping System	36
17.	Ejector Pumping Characteristics of Highly Unexpanded Jets	37

TABLES

I.	Summary of Phase 1 Staged Pumping	39
II.	Summary of First-Stage Performance (Phase 2)	40
III.	Ejector Characteristics of Test Configuration	41
IV.	Performance of Staged Pumping System	42

SECTION I
INTRODUCTION

Rocket engines are usually tested under simulated altitude conditions in ground test facilities (Refs. 1 and 2). The major problem in carrying out such tests is that of providing sufficient pumping capability for removal of the large mass flow of rocket-exhaust products from the test chamber. Testing of rocket engines under simulated space environmental conditions poses an even more complex problem because the volume of gas generated even by small, attitude-control rockets greatly exceeds the pumping capability of conventional space chamber pumping systems. For example, the firing of a typical control rocket would inject into the chamber 2500°K gas at a rate of approximately 100 gm/sec. In a short time, this would grossly overload the pumping system of even the largest space chambers.

Results of an exploratory, experimental investigation of a staged pumping system (Ref. 3) designed to sustain near-space pressure levels for several seconds under simulated rocket-exhaust gas flow conditions are described herein. Cryogenic pumping utilizing 77°K (LN_2) and 20°K (gaseous helium) cryosurfaces were employed for the first two stages, and the third stage consisted of titanium-getter surfaces (Ref. 4). The first and second stages were designed to remove all of the gas species which exist in rocket exhausts except hydrogen. Since cryopumping is an ineffective means of removing H_2, titanium gettering was selected for the third-stage pumping.

The first part of the experimental work was devoted to the pilot development of some of the pumping components and investigation of the removal of room temperature gases having a high velocity, directed flow. An improved three-stage pumping arrangement for pumping of high temperature gas mixtures of the type often found in rocket exhausts was investigated in the last part of this study.

SECTION II
APPARATUS

2.1 BASIC TEST CELL

Both phases of the investigation were conducted in an 8-1/4-in.-diam by 44-1/2-in.-long test chamber (Fig. 1). The chamber was constructed of two concentric stainless steel cylinders with the diameter of the inner

and outer cylinders being 8-1/4 and 10 in., respectively. The annular space between the cylinders was filled with liquid nitrogen to provide a condensing surface (with a total area of 830 sq in.) over the first 32 in. of the inner cylinder. The upstream and downstream ends of the test chamber were closed by stainless steel plates with an O-ring seal. The bottom part of the uncooled rear section of the cell was connected to an 8-in. port leading to an auxiliary pumping system, which consisted of a high speed, 6-in., oil diffusion pump with a cold cap and a mechanical forepump. The auxiliary pumping system was separated from the vacuum chamber by a 6-in. circular chevron cold trap and an air-operated sliding gate valve.

2.2 GAS ADDITION SYSTEM

During the first part of the investigation, gas or gas mixtures at room temperature were introduced into the test cell through a conical stainless steel nozzle having a throat diameter of 0.027 in., a half-angle of 15 deg, and a 20:1 area ratio. The nozzle exit was positioned approximately 10 in. from the front end flange (Fig. 1). The flow metering system (Fig. 2) was composed of two rotameters in parallel and control valves for regulating the flow rate. Choked flow conditions were maintained across the downstream rotameter control valves so that variations in flow did not result from any downstream variations in pressure. Below the downstream throttling valve, the gases could be vented to the atmosphere or passed into the test chamber by means of a three-way valve.

Essentially the same gas addition system was used for the second part of the investigation, but in this case the gas was introduced into the cell through an electrical resistance heater. This unit (Fig. 3) consisted of a 1/8-in.-diam platinum tube surrounded by several concentric stainless steel tubes. A current was passed through the platinum tube which heated the gas to a maximum temperature of about 2100°F. A conical Inconel® nozzle was attached to the downstream end of the heater; it had the same geometric characteristics as the Phase 1 nozzle.

2.3 STAGED PUMPING CONFIGURATIONS

The initial tests studied the effectiveness of titanium absorption pumping (Ref. 4) with a directed high velocity hydrogen flow. In this case, titanium sublimation filaments were positioned at the front and rear of the chamber, as indicated in Fig. 4a. Resistance heating was selected as the means to evaporate or sublimate the titanium because of the simplicity of the method and because no special equipment or techniques were required for the initial application. Several types of titanium

sublimation filaments were fabricated and tested. A summary of the titanium filament development program is contained in Appendix I. The type filament selected as a result of these tests (Fig. 5) contained twelve 0.020-in. tungsten wires twisted together to serve as the heating surface for the titanium. Eighteen 0.020-in. titanium wires were twisted together and spiraled around the tungsten heater wires. One 0.020-in. tungsten wire was wrapped around the outside of this assembly to help prevent the titanium from dropping off when heated. The length of the gettering portion of the filament was approximately 12 in.

For the initial staged pumping tests, cryosurfaces were added to the chamber as illustrated in Fig. 4b. An uncooled conical centerbody was placed in the center of the chamber a few inches downstream of the nozzle exit to deflect the flow toward the 77°K chamber walls. This provided the first-stage pump. The second pumping stage was made up of a copper annular ring with an outer diameter of 8.25 in., an inner diameter of 4 in., and a thickness of 1 in. Four equally spaced 1- by 2-in. fins were attached to the front and rear surfaces of the annulus, perpendicular to the annular face. This assembly was cooled to 20°K by the use of liquid helium. A H_2 vapor pressure thermometer was used to measure the temperature of the helium gas.

The third stage was composed of titanium coated surfaces at temperatures near 77°K which were produced by sublimation of the titanium elements. A heat shield was placed between the downstream titanium filament and the 20°K second-stage pump (Fig. 4b).

Based on experience gained during the initial tests, a somewhat more sophisticated three-stage pump was designed and fabricated. A schematic of this pumping arrangement installed in the test cell is given in Fig. 6.

The first stage (Fig. 7) was located 20 nozzle diameters from the nozzle exit. It consisted of two sets of liquid-nitrogen-cooled (77°K) circular copper louvers with a total area of 1665 cm^2. The outer surface of the forward portion of the first stage was designed to lie along streamlines of the expanding jet. This was done in order to minimize distortions of the jet near the cell walls to attempt to maintain ejector pumping by the jet. The streamline angles at various positions in the jet were determined from calculations made by Prozan (Ref. 5). The sample result of these calculations, shown in Fig. 8, was used to determine the initial angle of the outer louver at 20 nozzle diameters from the nozzle exit. The inner louver of the forward section served as a deflector directing the gas flow to the other pumping surfaces.

The second stage (Fig. 9) consisted of an 8-in. -long by 1-in. -diam hollow copper cylinder with six 3- by 8-in. copper fins welded to its surface

parallel to the general flow direction. This stage was cooled by 20°K helium gas flowing through the interior of the 1-in.-diam tube. The 20°K surface area was 2465 cm^2. A horizontal louver assembly cooled by LN_2 (also shown in Fig. 9) was placed just downstream of the pumping surfaces to prevent the heat load from the titanium-tungsten filaments in the third stage from reaching the 20°K surfaces. The function of the second stage was to remove gases such as CO or N_2 and any remaining traces of H_2O and CO_2 which were not captured by the first stage.

The third stage was composed of a titanium gettering pump which utilized filaments similar to those used in the Phase 1 tests (Figs. 5 and 9). This type of titanium-tungsten filament gave a high evaporation rate for approximately 10 sec which decreased to a very small rate in approximately 21 sec. The titanium was deposited on the walls of the downstream portion of the test chamber, and the evaporated titanium covered an area 2278 cm^2. During the time the titanium was deposited, the chamber walls were at approximately 77°K. The louvered heat shield between the second and third stages also served to prevent the first two stages and forward portion of the test cell from being contaminated with titanium.

2.4 INSTRUMENTATION

Pressures at both the upstream and downstream ends of the cell were measured by means of a cold-cathode ionization gage and a variable reluctance diaphragm pressure transducer. The cold-cathode gage was chosen because of its wide pressure range coverage of from 10^{-8} to 10^{-2} torr and a second range from 7×10^{-2} to 0.5 torr. The transducer was used to provide continuity and increased accuracy in the pressure range of 10^{-2} to 1 torr. The signals from the gage and the transducer were amplified and recorded on an oscillograph operating at a chart speed of 4 in./sec. Gas flow rates through the nozzle were measured by rotameters and pressure gates as indicated in Fig. 2. Titanium evaporation or sublimation rates were determined by precisely weighing the filaments before and after the tests.

During the three-stage pumping tests, the test chamber pressure was measured by ionization gages located upstream and downstream of the nozzle. The wall temperature of the heating tube and nozzle was measured with thermocouples and recorded on strip charts. Some calibration runs were made in which the total gas temperature of the expanded jet was measured by means of a thermocouple probe and correlated with the exit nozzle wall temperature. During subsequent tests, the measured wall temperatures were used to estimate the gas temperature.

SECTION III
PROCEDURE

The test cell was first evacuated to approximately 10^{-6} torr at ambient temperature by means of the auxiliary pumping system; before each run the apparatus was leak checked, and leaks were eliminated until a gas in-leakage rate of 10^{-4} atm cc/sec or below was obtained. Then the pressure instrumentation was calibrated, and cooldown of the cryosurfaces was started. The annular space between the two concentric cylinders was filled with LN_2 to provide 77°K walls over most of the inner surface of the cell. The presence of the 77°K walls provided a one order of magnitude pressure drop in the cell to 10^{-7} torr. If gettering was to be used in the test, an electric current was passed through the filament until a strong outgassing rate was detected on the ion gages. This current was maintained until the outgassing had ceased and the cell was near its base pressure. Various pumping stages were activated as required by the test objectives by introduction of LN_2, gaseous 20°K helium, or by evaporation of the titanium element. For tests requiring titanium gettering, the current passing through the titanium filament was increased until evaporation was detected by a drop in the cell pressure. This current was maintained throughout the run.

Before each run, the flow metering system was properly adjusted by discharging the test gas to the atmosphere until the desired flow conditions had been established. The flow was then switched into the cell. When gas mixtures were used, they were obtained premixed from a high pressure bottle. For the Phase 2 tests, the current to the resistance heating unit was adjusted to produce the desired gas temperature (from 80 to 2100°F) prior to switching the gas to the test cell.

SECTION IV
RESULTS AND DISCUSSION

4.1 HYDROGEN PUMPING

Since hydrogen gas may be one of the prime constituents of the exhaust of rocket engines, an effective means of pumping it is quite important to the development of a staged pumping system. Clausing (Ref. 4) and Kindall (Ref. 6), as well as several other investigators, have measured the adsorption characteristics of titanium surfaces for hydrogen gas when it has only random thermal velocities. Because no information was available concerning the effectiveness of titanium surfaces for pumping high velocity, directed

hydrogen flows, the initial tests were conducted. The cell configuration for these tests is shown in Fig. 4a. Titanium was primarily deposited on the 77°K chamber walls,* and hydrogen was admitted into the chamber at a total temperature of about 300°K.

Very low flow rates (3×10^{-2} torr-ℓ/sec) were employed during some of the initial tests so that the gettering action could be observed over a long period of time. The time history of the evaporation rate can be followed by observing the change in system pressure while a constant rate of gas flow is pumped. These tests indicated that a steady pressure was maintained for the first two minutes of the run (Fig. 10). This does not indicate that the evaporation rate is constant, but rather that the rate is above the value necessary to maintain this pressure. At the end of approximately 2 min, the evaporation rate declined until the system pressure reached a second plateau. At this time, the filament power was cut on and off at intervals to illustrate the effect of evaporation rate. A relatively constant pumping speed was obtained at this higher pressure level for approximately 30 to 35 min. At the end of this period, the system pressure began to rise slowly as the evaporation stopped and as the remaining active titanium film became saturated.

These data indicate that the magnitude of the titanium sublimation rate and the variation of this rate with time are important in obtaining maximum H_2 pumping. The timing of the flow injection in the evaporation cycle is also quite critical because of the short peak evaporation period experienced with the Type 1 filament developed for these tests.

Several tests were made at much larger flow rates to determine the effects of varying both the flow rate and the titanium evaporation rate (Fig. 11). A comparison of Fig. 10 with Figs. 11b and c demonstrates, as would be expected, that increasing the flow rate decreases the time period over which a constant pressure can be maintained, as well as increasing the operating pressure level. Similarly, a comparison of Fig. 11a with Fig. 11b illustrates that a decrease in the titanium evaporation rate at a constant H_2 mass flow rate will produce the same effect. These results are consistent with the findings of other investigators and are related to the time required to saturate the available titanium film or to completely evaporate the titanium filament. The pressure increases indicate that H_2 was being injected into the chamber at a greater rate than titanium absorption sites could be created at the walls.

---

*Kindall (Ref. 6) has found that the temperature of the surface at the time of titanium depositation significantly influences the sticking fraction for hydrogen.

During one run, the variation of the upstream and downstream pressure was measured and is shown as a function of time in Fig. 11c. After about 2 sec, an equilibrium pressure was reached, and the upstream and downstream pressures were relatively stable for the next 5 sec at values of 4×10^{-4} and 6×10^{-4} torr, respectively. The pressure then began to increase, probably because the titanium evaporation rate was decreasing. An attempt has been made to make a rough estimate of the sticking fraction from these data. Using a flow rate of 18.3 torr-ℓ/sec of room temperature H_2 gas, a pressure of 6×10^{-4} torr, and a gettering area of 2760 cm^2, an estimated sticking fraction of 0.25 was obtained. This value is higher than those reported by Clausing and Kindall, but is within reasonable agreement, considering the accuracy of the calculation.

In any case, this phase of the test program indicated that titanium gettering would pump room temperature hydrogen having a directed velocity about as effectively as it pumps a "static" hydrogen gas load.

4.2 GAS MIXTURE PUMPING

Once it was established that titanium gettering could successfully pump flowing hydrogen, the next step of the investigation was to determine if there was any effect on the gettering efficiency of H_2 from the presence of other gases. Clausing (Ref. 4) has also pumped nitrogen and found that the sticking fraction on a 77°K titanium surface of N_2 is about four or five times greater than that for H_2. But, he also reports that if a small amount of O_2 or N_2 were adsorbed on the titanium film, this very drastically reduced the film's ability to capture hydrogen. Consequently, some additional measurements were made to determine if these effects also existed for pumping of flowing hydrogen. First, nitrogen was passed through the nozzle into the test chamber. Figure 12 illustrates that the pumping effectiveness of titanium for flowing N_2 is greater than previously measured for H_2, which agrees with Clausing's findings. Next a simple binary mixture of H_2 and N_2 was introduced into the chamber to determine if the presence of N_2 would reduce the pumping effectiveness of H_2.

Two such gettering tests were made with a 50-percent H_2 - 50-percent N_2 mixture (by volume) at flow rates of 9.9 and 4.0 torr-ℓ/sec. The pressure-time curves for these runs are shown in Fig. 13, together with the pressure versus time curve obtained with an 11.3 torr-ℓ/sec H_2 flow. It is believed that the titanium evaporation rates were approximately the same for these three runs. These data indicate that the N_2-H_2 mixtures are not pumped nearly as effectively as was H_2 alone. This effect may be caused by the inability to accurately measure the pressure of gas mixtures; however, it is more probable that it is a real effect and similar to one previously found by Clausing. In any event, it would appear to be desirable

to have staged pumping and attempt to remove as much of the other gases as possible before they reach the H_2 gettering section. The next series of experiments describes the preliminary effort in this direction.

4.3 PUMP STAGE DEVELOPMENT

Cryogenic surfaces are well suited for the initial stages of a multistage pumping system of flowing combustion gases. They can remove all combustion gas mixture components except H_2 or He. Moreover, cryopumping stages can be arranged so that higher temperature cryosurfaces precede the lower temperature surfaces, and, thus, each surface can cool the gas that it does not pump so that more efficient removal can be obtained by a subsequent stage. Finally, a titanium gettering last stage can be used to effectively pump hydrogen. A three-stage pumping system consisting of (1) 77°K cryopumping surfaces, (2) 20°K cryopumping surfaces, and (3) a titanium gettering stage was assembled for feasibility studies of this method, as shown schematically in Fig. 4b.

To check the pumping performance of this arrangement, a room temperature gas mixture of 11.3-percent H_2, 65.1-percent N_2, 20.9-percent CO, and 2.7-percent CO_2 (by volume) was introduced into the chamber. The average mixture flow rate used in all tests was 38.2 torr-ℓ/sec.

The rate of change of the pressure in the downstream end of the chamber was first measured with the first and second stages operating, $\left(\frac{dp}{dt}\right)_2$, and then with all three stages in operation, $\left(\frac{dp}{dt}\right)_3$. With these data and the assumption that the CO_2 is completely pumped by the first stage, it is possible to make a rough estimate of the division of pumping between the stages. These estimates are only approximate because (1) the exact nature of the flow is unknown (it may vary from the continuum to the free-molecular regime), (2) there is probably an interaction between the pumping effectiveness of the stages (i.e., $\left(\frac{dp}{dt}\right)_2$ is probably somewhat different when the third stage is activated), and (3) the ion gages used to measure pressure were not calibrated for use with gas mixtures. However, even these rough estimates were useful in determining qualitatively the pumping effectiveness of the various stages. When it is assumed that all of the CO_2 was pumped in the 77°K first stage, the calculational procedure was as follows,

A. Q_T = 38.2 torr-ℓ/sec = gas injection rate (held constant for all runs)

B. $Q_{\text{stage No. 1}}$ = 1.03 torr-ℓ/sec = Stage 1 pumping rate (assumed)

C. $Q_{\text{stage No. 2}} = Q_T - \left(\frac{dp}{dt}\right) V + Q_{\text{stage No. 1}}$ = Stage 2 pumping rate

D. $Q_{\text{stage No. 3}} = \left(\frac{dp}{dt}\right)_2 - \left(\frac{dp}{dt}\right)_3 V$ = Stage 3 pumping rate

E. $Q_{\text{not pumped}} = \left(\frac{dp}{dt}\right)_3 V$ = Amount not pumped in the system

where V is the system volume.

The division of pumping speeds as calculated by this method for four test runs is shown in Table I. Relatively low upstream pressures were produced over about the first 3 sec of Runs 2, 3, and 4 by the three-stage pump. The high pressures obtained in Run 1 are believed to be caused by poor titanium evaporation. Comparison of the pumping performance of the various stages (Table I) indicates that the third stage may be pumping 1-1/2 to 2 times the H_2 gas load, which indicates that the performance of the first two stages is low. Since there is very little gas removed by the first stage, the low performance is primarily caused by the second stage. The third stage may be removing a large amount of N_2 and/or CO and leaving a large portion of the H_2 unpumped. The two possible explanations for low performance of the second stage are insufficient cryopumping area and an inadequate gas flow path to the cryosurfaces.

Although the titanium gettering stage would tend to compensate for poor performance of the prior stages, it should not be allowed to do so. Because the presence of other gases reduces the H_2 pumping efficiency, they must be removed by the initial stages if low pressures are to be achieved. In this case, redesign of the first and second stages was clearly indicated.

The results of these tests were quite encouraging, however, and indicated that staged pumping is indeed a feasible method for removing large flow rates of room temperature, rocket-exhaust gas mixtures.

4.4 THREE-STAGE PUMPING SYSTEM

Since the initial tests demonstrated the general feasibility of staged pumping, a second 3-stage pump was assembled to:

1. Investigate possible improvement of the first and second cryogenic stages.
2. Determine the effectiveness of pumping high-temperature gases which better simulate combustion gas conditions.
3. Evaluate possible pressure reduction caused by ejector pumping of the expanding jet (Refs. 1 and 2).

Because various flow conditions ranging from those corresponding to the free-molecular regime to those for continuum flow may exist through the various stages, detailed calculation of the pumping performance is not practical. The stages were qualitatively designed assuming free-molecular flow which should result in the calculated pumping speed being somewhat conservative. The actual stage performance could best be obtained experimentally.

The operation of each stage of the Phase 2 pumping system was primarily determined from pressure-time histories of the various gas mixtures used.

4.4.1 First Stage Pumping

Because of the low performance of the cryogenic stages during the Phase 1 tests, a somewhat more sophisticated first-stage design was attempted. The cryogenic surface area of the first stage was based on cryopumping data for high-temperature CO_2 obtained by McCullough and Wang (Ref. 7). These investigators found that the capture coefficient of a 77°K surface for CO_2 varies with gas temperature in the following manner:

$$1 - C = e^{-\epsilon/KT_g}$$

where

- C is the capture coefficient
- ϵ is a constant at a given cryosurface temperature
- K is Boltzman's constant
- T_g is the gas temperature

For CO_2 it was found that $\epsilon/K = 289$ over the temperature range $0.0008 \leq 1/T \leq 0.00515$ (see Ref. 7). For a gas temperature of 2050°F, this equation predicts that the capture coefficient for CO_2 in the free molecular flow regime is 0.18. The first stage was designed to pump about 80 torr-ℓ/sec of CO_2 and/or H_2O and maintain a pressure of 1.3×10^{-2} torr. Since the capture coefficient of H_2O is higher than that of CO_2, the design would be somewhat conservative based on a capture coefficient of 0.18. In any event, for these conditions the area required was estimated to be about 1660 cm^2. This was provided by using a louver system designed to deflect some of the gas molecules into the cooled surfaces. As noted previously, the outer louver of the first section was designed to lie along flow streamlines to minimize degradation of ejector pumping of the jet. The remaining louvers or deflectors were located to promote several collisions of the gas particles with 77°K surfaces interior to the jet flow.

To experimentally evaluate the performance of this stage, CO_2 gas flows at temperatures ranging from 80 to 2050°F were injected through the nozzle into the chamber with only the first stage in operation. The results of a typical run in which the equilibrium pressure upstream was 4.5×10^{-6} torr and the downstream pressure was 2.2×10^{-2} torr are shown in Fig. 14. The system under these conditions was removing CO_2 at a rate of 101 torr-ℓ/sec, which is about 20 percent greater than the design value. Table II contains a summary of the results of several additional runs.

Data from Fig. 14 and Table II indicate that the first-stage performance was somewhat better than anticipated.

4.4.2 Second-Stage Pumping

The high performance of the first stage would tend to indicate that the gas flow is effectively deflected into the 77°K cryosurface. Consequently, those molecules which will not condense on a 77°K surface are probably cooled to near 77°K before they enter the second stage. Capture coefficients of various gases at 77°K on a 20°K surface are given in Refs. 8 and 9 for the case of free-molecule flow. For example, data presented in Ref. 9 indicate that with a 20°K surface the capture coefficient for N_2 is about 0.8 and for CO is essentially 1.0. About the largest 20°K pumping surface which could be conveniently provided in the test chamber was 2465 cm^2 of fin surfaces, as shown in Figs. 6 and 9. Assuming the theoretical volumetric striking rate given by kinetic theory,

$$\frac{dv}{dt} = 3.64 \sqrt{\frac{T_g}{M}}$$

(where T_g is the gas temperature in degrees Kelvin and M is the molecular weight) and using the Ref. 9 capture coefficients, the pumping speeds of the second stage for N_2 and CO are estimated to be about 12,000 ℓ/sec and 15,000 ℓ/sec, respectively. Again, these estimates may be conservative since they are based on the existence of free-molecular flow, whereas near-continuum flow probably existed. On the other hand, a portion of the directed-flow particles may tend to pass through the stage without having any collisions with the cold surfaces. Consequently, an experimental evaluation of the pumping speed of this stage was made by injecting 91 torr-ℓ/sec of a gas mixture of 70-percent CO_2 and 30-percent N_2 into the chamber with both the first and second stages in operation. The results of a typical run when this gas mixture was injected at a temperature of 2020°F are shown in Fig. 15. The system reached steady-state upstream and downstream pressures of 5.2×10^{-4} and 1.5×10^{-4} torr, respectively. A summary of the performance of the second stage is presented in Table III.

If it is assumed that the first stage removed all of the CO_2, then the remaining N_2 flow rate (27.3 torr-ℓ/sec for the test corresponding to

Fig. 15) entered the second stage. With the free-molecular flow pumping speed estimate made above, this experimental flow rate should have resulted in a downstream steady-state pressure of 2.3×10^{-3} torr. However, as shown in Fig. 15, the pressure at the exit of the second stage was maintained at about 1.5×10^{-4} torr. Thus, the second stage also operated better than expected.

4.4.3 Third-Stage Pumping

Since the third-stage pump operated satisfactorily during the initial tests, essentially the same arrangement was employed for the third stage. Its gettering area was slightly reduced to 2278 cm^2 which, based on the earlier tests, should have provided a pumping speed of 5000 ℓ/sec or 8 torr-ℓ/sec. The useful operating time for this stage is limited since the life of the filaments is short.

4.4.4 Combined Third-Stage Pumping Performance

A gas mixture at a temperature of 2020°F and composed of 55.5-percent CO_2, 42-percent N_2, 1.8-percent CO, and 0.5-percent H_2 by volume was injected at a rate of 92 torr-ℓ/sec into the test chamber. The individual gas loads that this would impose on each stage are summarized below together with the estimated pumping capability of the various stages as determined from the previous stage evaluation tests.

Percent by Volume		Pumping Load	Pumping Capacity
CO_2	55.5	51.0 torr-ℓ/sec	(Stage 1) 100 torr-ℓ/sec
N_2	42.2	38.9 torr-ℓ/sec	(Stage 2) 27.3 torr-ℓ/sec
CO	1.8	1.65 torr-ℓ/sec	
H_2	0.5	0.45 torr-ℓ/sec	(Stage 3) 8 torr-ℓ/sec
	100.0	92.00	

Thus, it is observed that with this particular simulated exhaust gas mixture, the first and third stages should easily pump the required gases whereas the second stage would not. Consequently, the second stage would probably govern the achievable pressure level.

The combined performance of the three stages operating together is shown in Fig. 16 and Table IV. The three-stage pumping system produced a pressure of 4.3×10^{-3} torr for as long as 80 sec in the upstream end of the chamber with a flow rate of 92 torr-ℓ/sec and with the gas having a total temperature of over 2000°F. The time over which the pressure remains relatively constant depends on the ability of the third stage to remove the hydrogen in the system.

These tests indicated that multistage pumping could be a very useful method of achieving relatively low pressures for rocket engine tests. Improvements of the stage components are still possible. In particular, the further development of titanium evaporation sources which would have high and steady evaporation rates is clearly needed.

4.5 EJECTOR PUMPING

With the injection nozzle and chamber geometry employed for these tests, it is also possible to utilize the jet itself to maintain a lower pressure in the upstream end of the chamber. Ejector pumping of this type is frequently used for rocket engine tests at relatively high pressures (Refs. 1 and 2). Inspection of several of the previously presented figures reveals that the upstream pressure was significantly lowered during some tests by ejector pumping caused by the jet, whereas in other tests it was not. This was presumably caused by the variations of test conditions. The operation or performance of ejectors at the pressure levels of this investigation is not well documented. Some information, given in Ref. 6, is presented below in a somewhat modified form because ejector pumping offers the possibility of producing a still lower pressure in at least a portion of the chamber.

The gas injection system employed in the Ref. 7 tests was essentially the same as that used during the Phase 2 tests reported here. The notation used to describe ejector performance is shown in Fig. 17. Measurements of P_c and P_{ex} were made for various mass flows through the primary nozzle. Unfortunately, it was not possible to measure P_{op} directly; however, since the nozzle was choked it was computed from

$$\frac{\dot{m}}{A^*} = \sqrt{\left(\frac{\alpha}{R}\right)\left(\frac{2}{\alpha+1}\right)^{\frac{\alpha+1}{\alpha-1}}} \quad \frac{P_{op}}{\sqrt{T_{op}}}$$

where

$\dot{m}$ is the mass flow rate

A^* is the area of the nozzle throat

α is the ratio of specific heats

T_{op} is the total temperature of the primary jet

The pressure ratio which was achieved across the test chamber for these tests is shown in Fig. 17 as a function of the nozzle operating pressure ratio. These ejector performance data were obtained with a CO_2 primary flow at two temperature levels and with a very small N_2 secondary flow. Figure 17 illustrates that pressure ratios of several hundred

may be obtained through ejector pumping with very highly underexpanded jets. Ejector pumping increases with increasing nozzle pressure ratio and is somewhat reduced as the temperature of the primary stream is increased. The initial cryogenic stages must be designed in a manner to promote ejector pumping of the jet.

SECTION V
CONCLUSIONS

Results of a test of a three-stage, cryogenic, titanium pumping system indicate that:

1. Titanium gettering on 77°K surfaces can be employed to pump large amounts of flowing H_2 gas.
2. A combination of 77 and 20°K cryosurfaces together with a titanium gettering stage can successfully pump large flow rates of simulated, high temperature rocket-exhaust products. The prototype pump removed about 0.3 gm/sec of a simulated combustion gas mixture at a temperature of about 1200°K and maintained a pressure level in the 10^{-3} torr range in the test chamber.
3. The presence of other gases reduces the gettering efficiency of a titanium surface for H_2. Consequently, to achieve maximum efficiency in pumping H_2, the other pumping stages should be arranged to remove any other mixture components present to allow only the H_2 to enter the titanium gettering stage.
4. The useful run time with this staged pumping system depends on the ability of the gettering stage to absorb hydrogen. Additional work is needed to develop titanium evaporation sources which can provide steady and large evaporation rates over long durations.

APPENDIX I
DEVELOPMENT OF TITANIUM FILAMENTS

Since hydrogen gas is a constituent of the exhaust of many rocket engines, an effective means of removing this gas from test chambers operating at extremely low pressures must be developed. Cryopumping, cryosorption, and diffusion pumps do not offer a practical solution to this problem. However, the removal of hydrogen gas by titanium sublimated from a source to a pumping surface appears to be a possible solution. A number of methods are available that could be developed to sublimate titanium, such as (1) electron bombardment, (2) lasers, (3) induction heating, and (4) resistance heating. Since resistance heating is the simplest, a brief investigation was initiated to develop a titanium filament.

Clausing (Ref. 4) has published some experimental test results which indicate the capture coefficient for hydrogen of titanium being continuously deposited on a 77°K surface is about 0.1 with a hydrogen injection-to-titanium evaporation ratio (on a molar basis) of 0.40. Consequently, a sublimation or evaporation rate of 202 gm/hr of titanium is needed to pump 8 torr-ℓ/sec of hydrogen. Because of the sublimation area limitation in the experimental chamber, it was estimated that a pressure of the order of 10^{-4} torr would be maintained for a short period of time.

The evaporation rates of several types of titanium filaments were experimentally measured to determine what conditions were necessary to achieve these rates. A physical description of the filament tests is given below:

Type 1 - Twelve 0.020-in. tugnsten wires were twisted together to serve as the melting surface for the titanium.

Eighteen 0.020-in. titanium wires were twisted together and spiraled around the 12 tungsten wires. One 0.020-in. tungsten wire was wrapped around the outside of the titanium wires to prevent teardrops of hot titanium from forming and eventually falling off the filament. The filament had a 12-in. length over which titanium was evaporated.

Types 2, 3, and 4 were constructed similar to Type 1 except for the wire sizes noted.

Type 2 - Three 0.050-in. tungsten wires
Eighteen 0.020-in. titanium wires
One 0.020-in. tungsten wire
Length 12 in.

Type 3 - Two 0.050-in. tungsten wires
Eighteen 0.020-in. titanium wires
One 0.020-in. tungsten wire
Length 12 in.

Type 4 - Eight 0.029-in. tungsten wires
Eighteen 0.020-in. titanium wires
One 0.020-in. tungsten wire
Length 12 in.

Type 5 - One 1/8-in. titanium rod with a length of 7 in.

A summary of the test conditions and measured sublimation rates is given below:

Filament Type	Voltage, v	Current, amp	Sublimation rate, gm/hr
1	10.5	170	72
1	12.0	180	135
1	13.5	180	180
1	13.5	180	173
2	10.0	200	96
2	9.8	200	96
2	10.0	200	109
2	10.0	200	120
3	12.5	170	124
3	12.5	170	132
3	12.5	175	126
3	12.5	175	126
4	13.5	140	120
4	13.5	140	138
5	5.6	90	0.090
5	5.6	95	0.350
5	5.6	100	0.700
5	5.6	105	1.000

The sublimation rates shown are average values which were determined by measuring the weight loss of the filament for a known time of evaporation. They do not account for possible variations in rate during the evaporation period. Any variation in the sublimation rate is very important since it determines the useful test time that can be obtained for a given flow. Type 1 was selected for use in the stage pumping investigation because it was the only filament with a rate approaching 200 gm/hr. Moreover, it could be made to operate with fairly constant evaporation rate over a period of time.

REFERENCES

1. Goethert, B. H. "High Altitude and Space Simulation Testing." ARS Journal, Vol. 32, No. 6, June 1962. pp. 872.
2. Goethert, B. H. and Barnes, L. T. "Testing Space Vehicles on the Ground." A & A Engineering, Vol. VI, No. 6, July 1963, pp. 18.
3. Barkdoll, R. O. and Anderson, J. W. "Cryopumping Rocket Exhaust Products at High Through Puts and Low Pressure." Convair Division, General Dynamic Corp., Convair, San Diego, California.
4. Clausing, R. E. "A Large-Scale Getter Pumping Experiment Using Vapor Deposited Titanium Films." ORNL 3217, Union Carbide Corporation, October 1961.
5. Prozan, R. J. "PMS Jet Wake Study Program." Lockheed Aircraft Corp., Rept. No. LMSC 919901, October 1961.
6. Kindall, S. M. "Adsorption of Hydrogen by a Thin Film of Titanium." AEDC-TR-65-113 (AD460316), 1965.
7. McCullough, B. A. and Wang, E. S. J. "Cryopumping of CO_2 Nozzle Flow by 77°K Cryosurface." AEDC-TDR-64-250 (AD453440), January 1965.
8. Collins, J. A., Jr., and Dawson, J. P. "Cryopumping of 77°K Nitrogen and Argon on 10-25°K Surfaces." AEDC-TDR-63-51 (AD404174), May 1963.
9. Dawson, J. P., "Capture Coefficients of Six Common Gases." AEDC-TDR-64-84 (AD600146), May 1964.

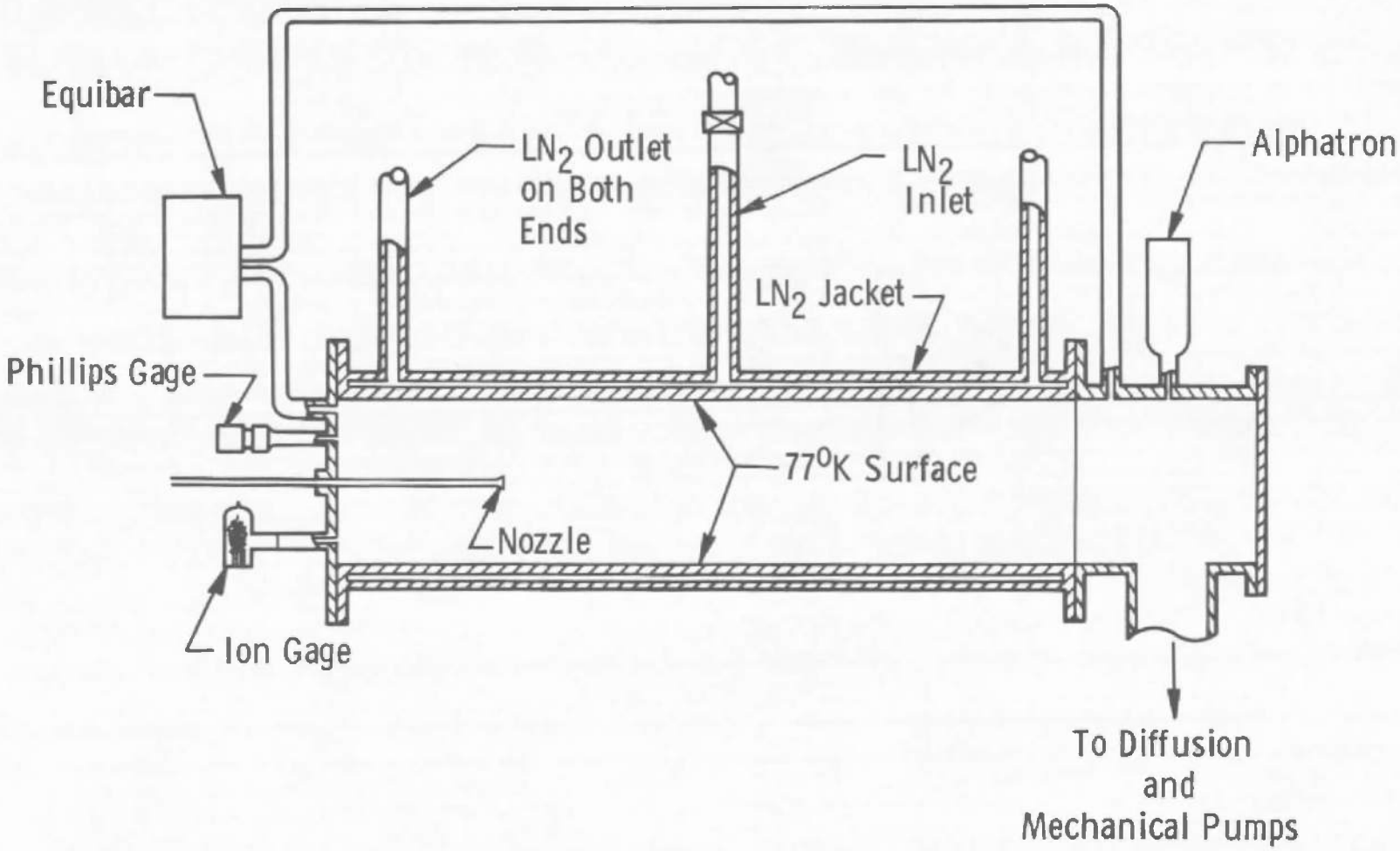

Fig. 1 Basic Test Cell

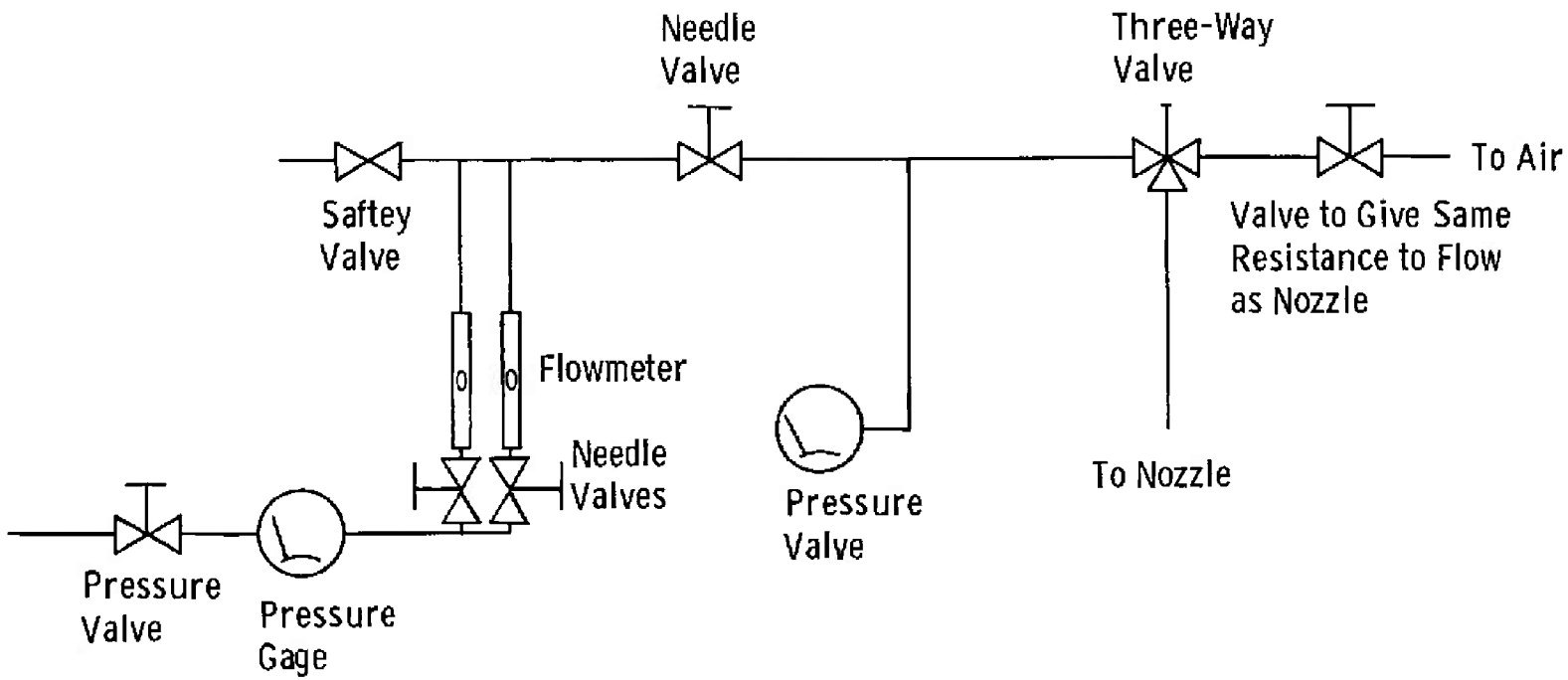

Fig. 2 Nozzle Flow System

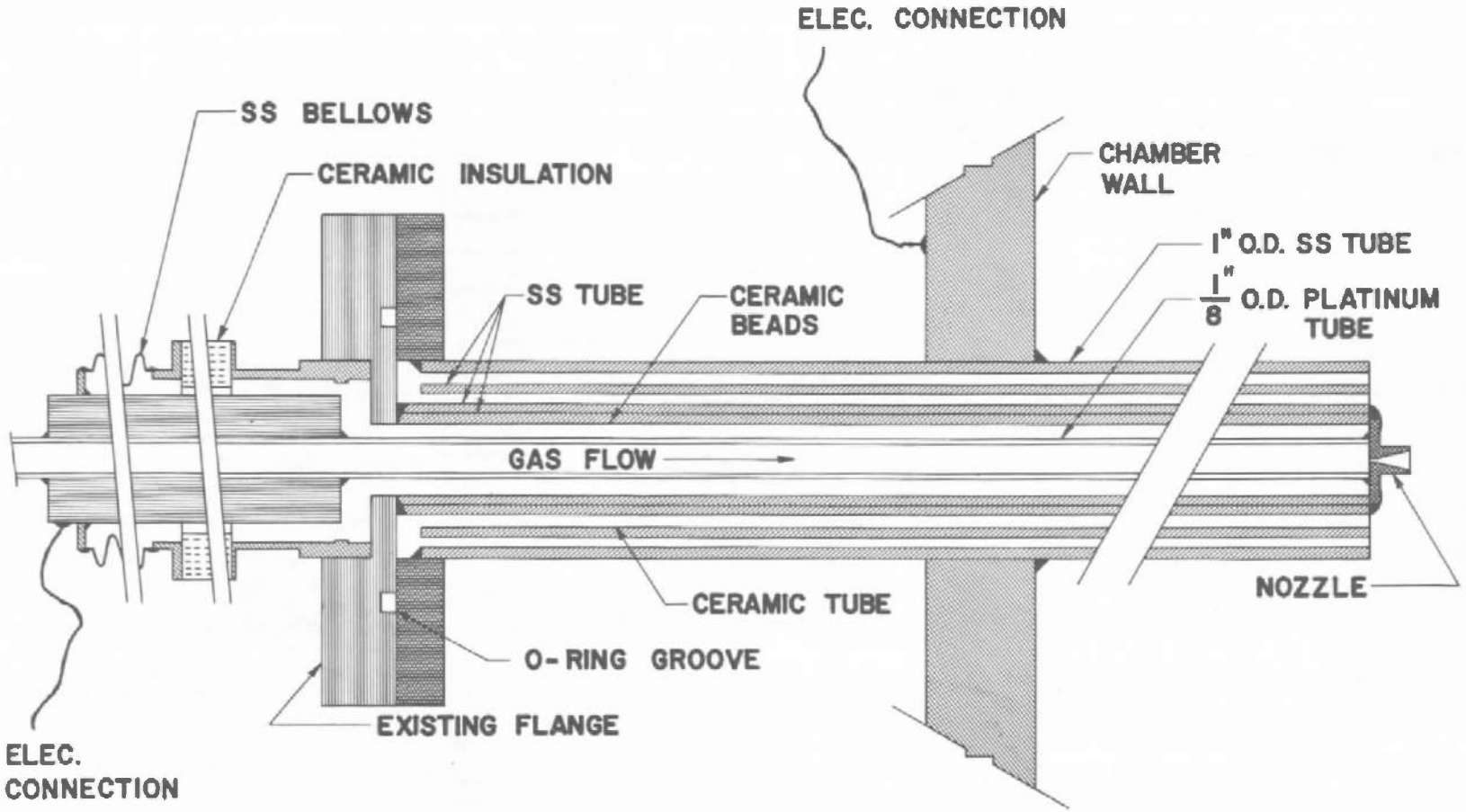

Fig. 3 Gas Flow Heater Unit

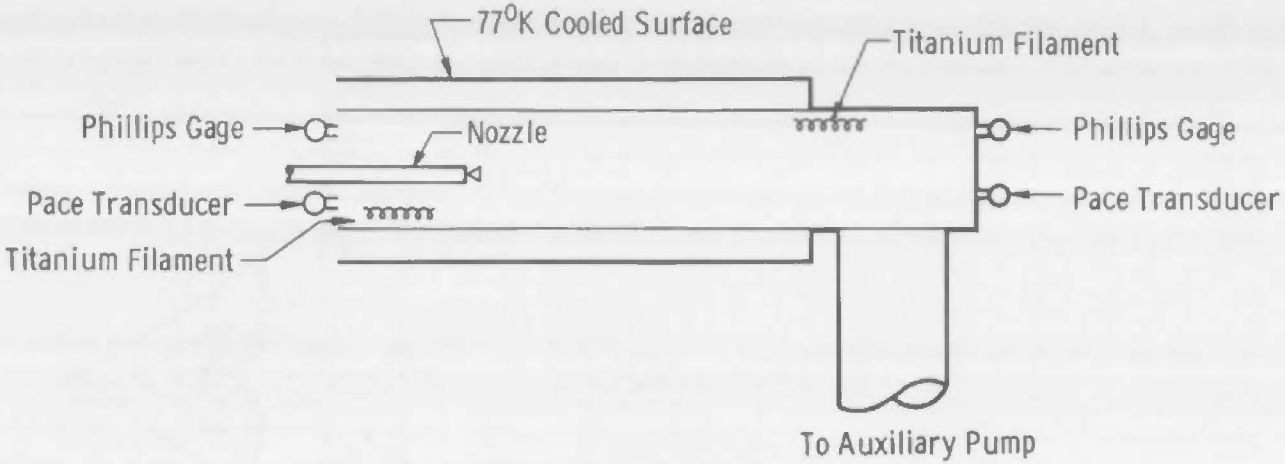

a. Phase I Titanium Pumping

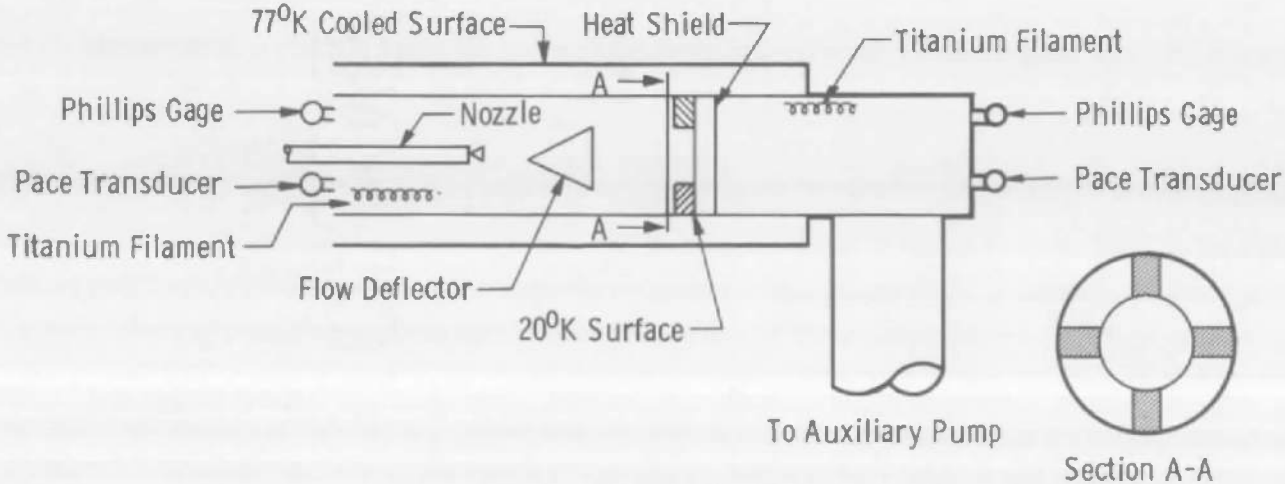

b. Phase I Staged Pumping

Fig. 4 Schematic of Pumping Configuration Employed in Phase I Tests

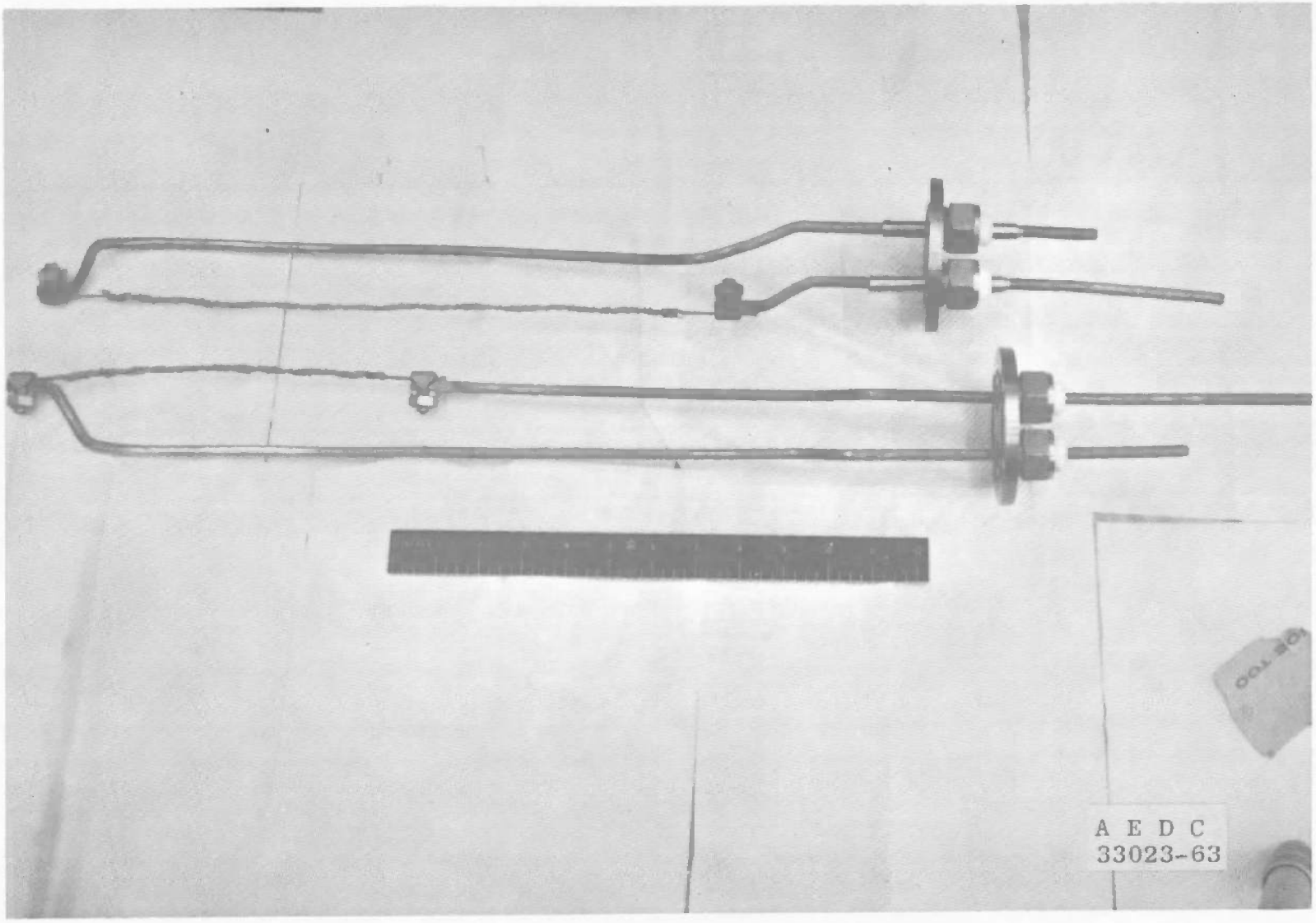

Fig. 5 Titanium-Tungsten Filaments

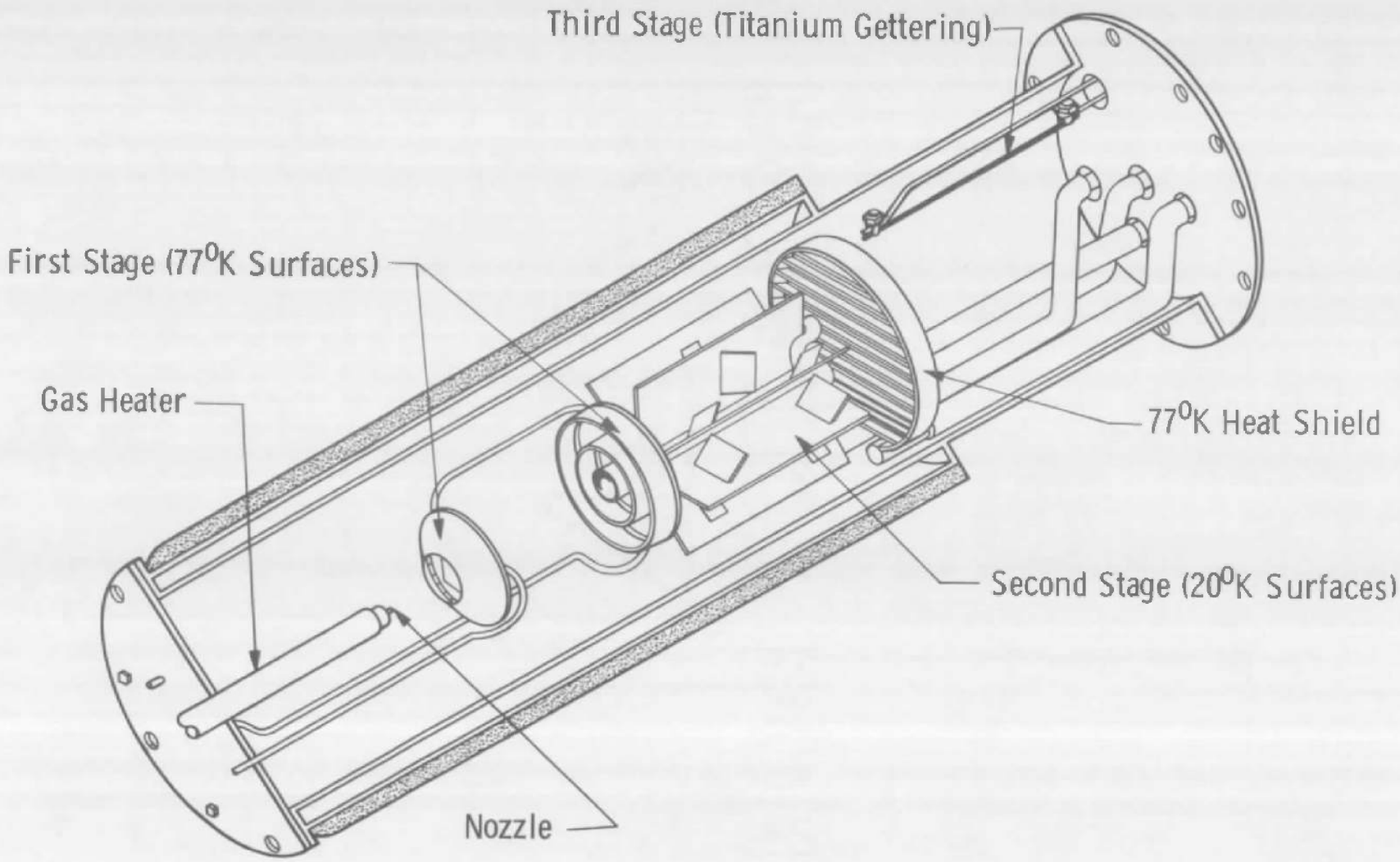

Fig. 6 Three-Stage System for Rocket Products Removal

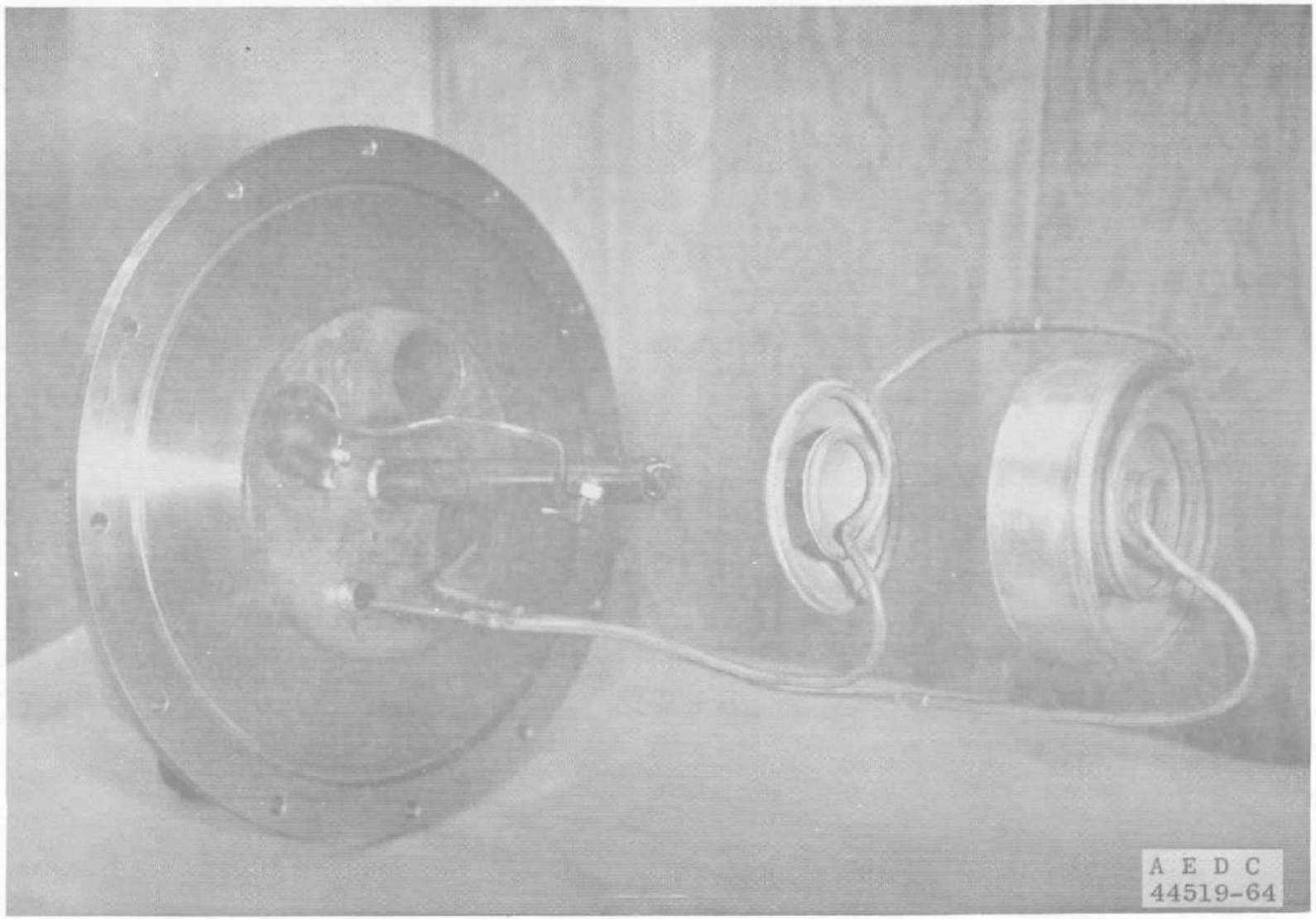

Fig. 7 First Stage of the Three-Stage System

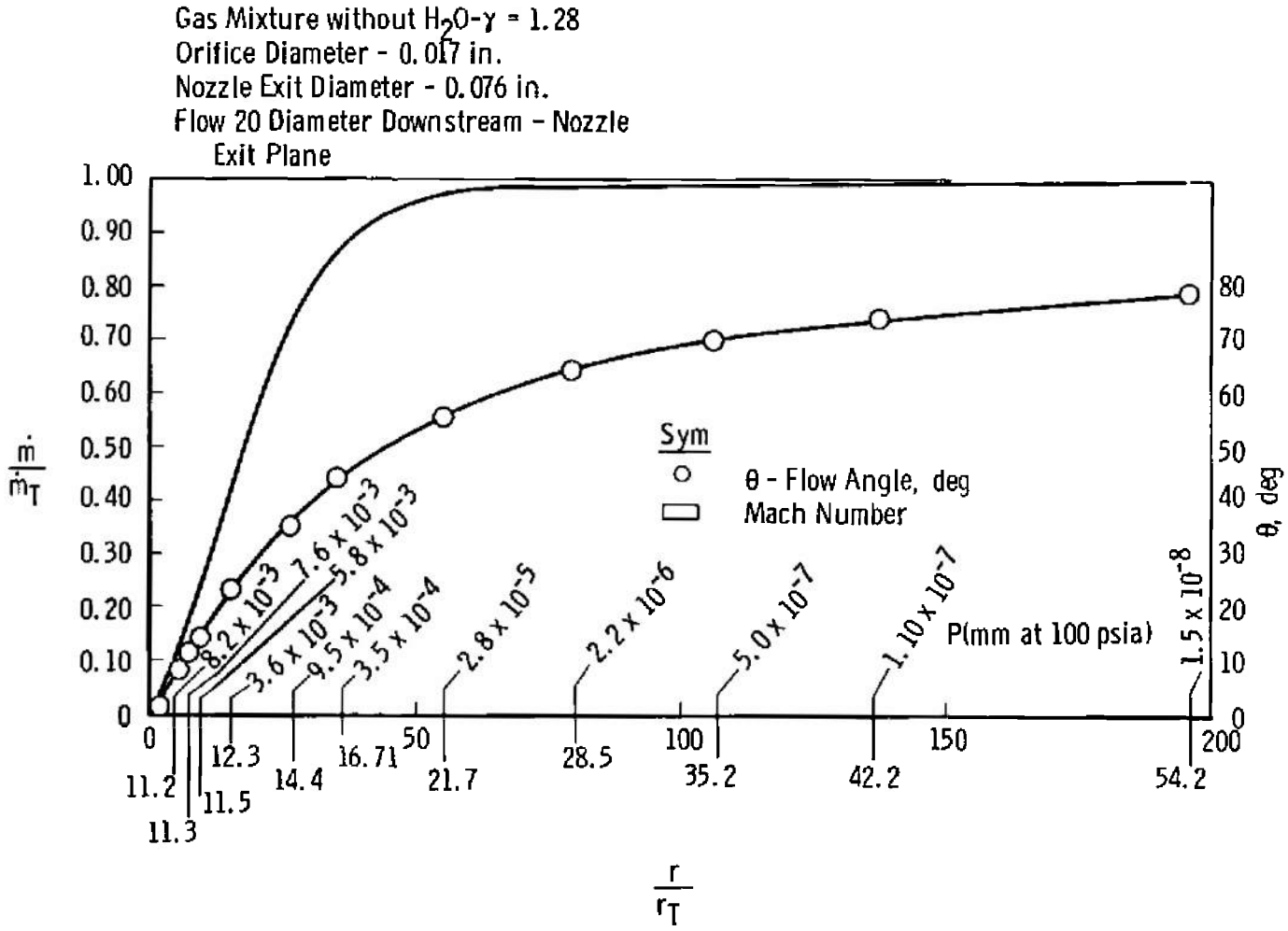

Fig. 8 Calculated Characteristics of Expanding Jet

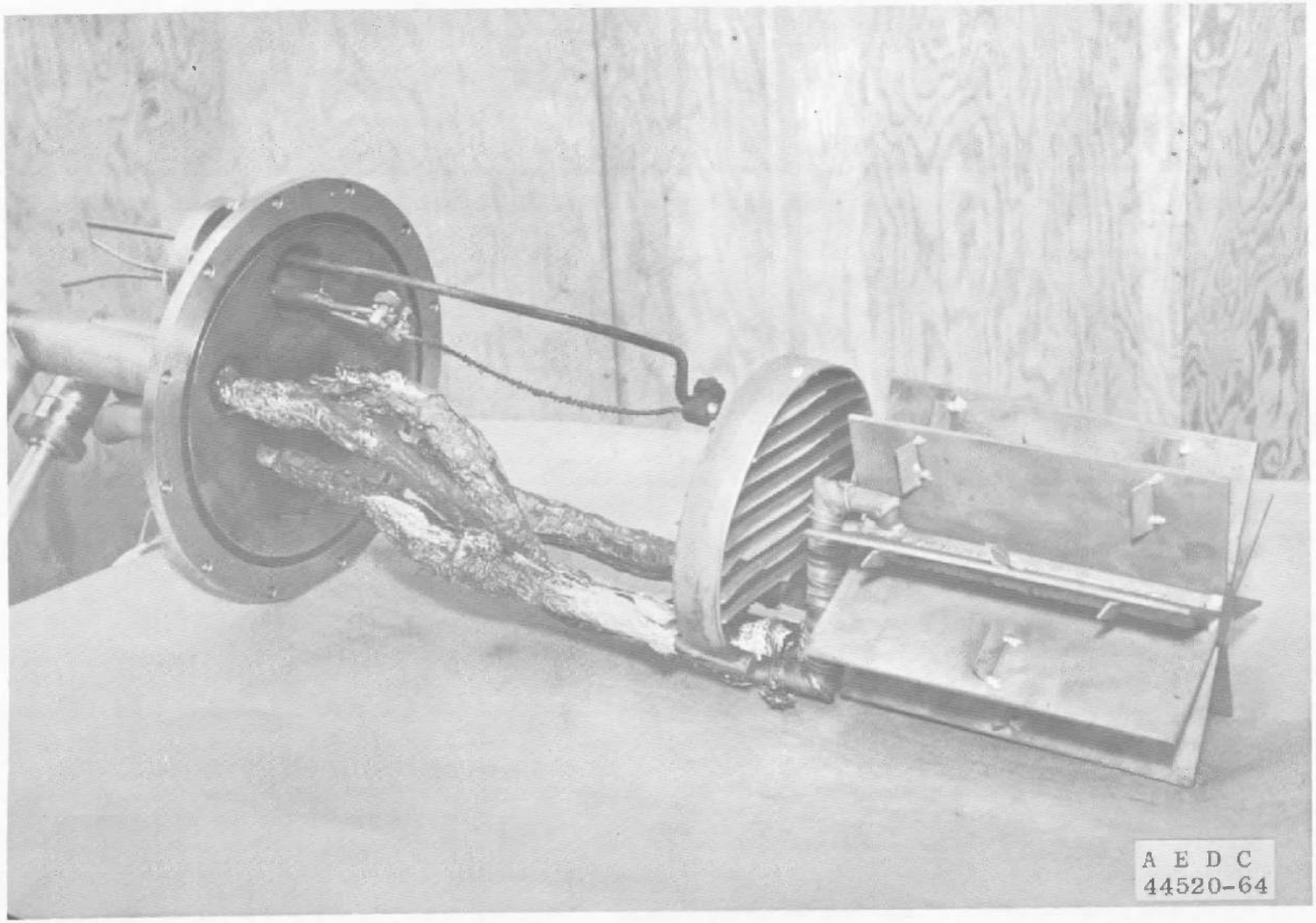

Fig. 9 Second Stage of the Three-Stage System

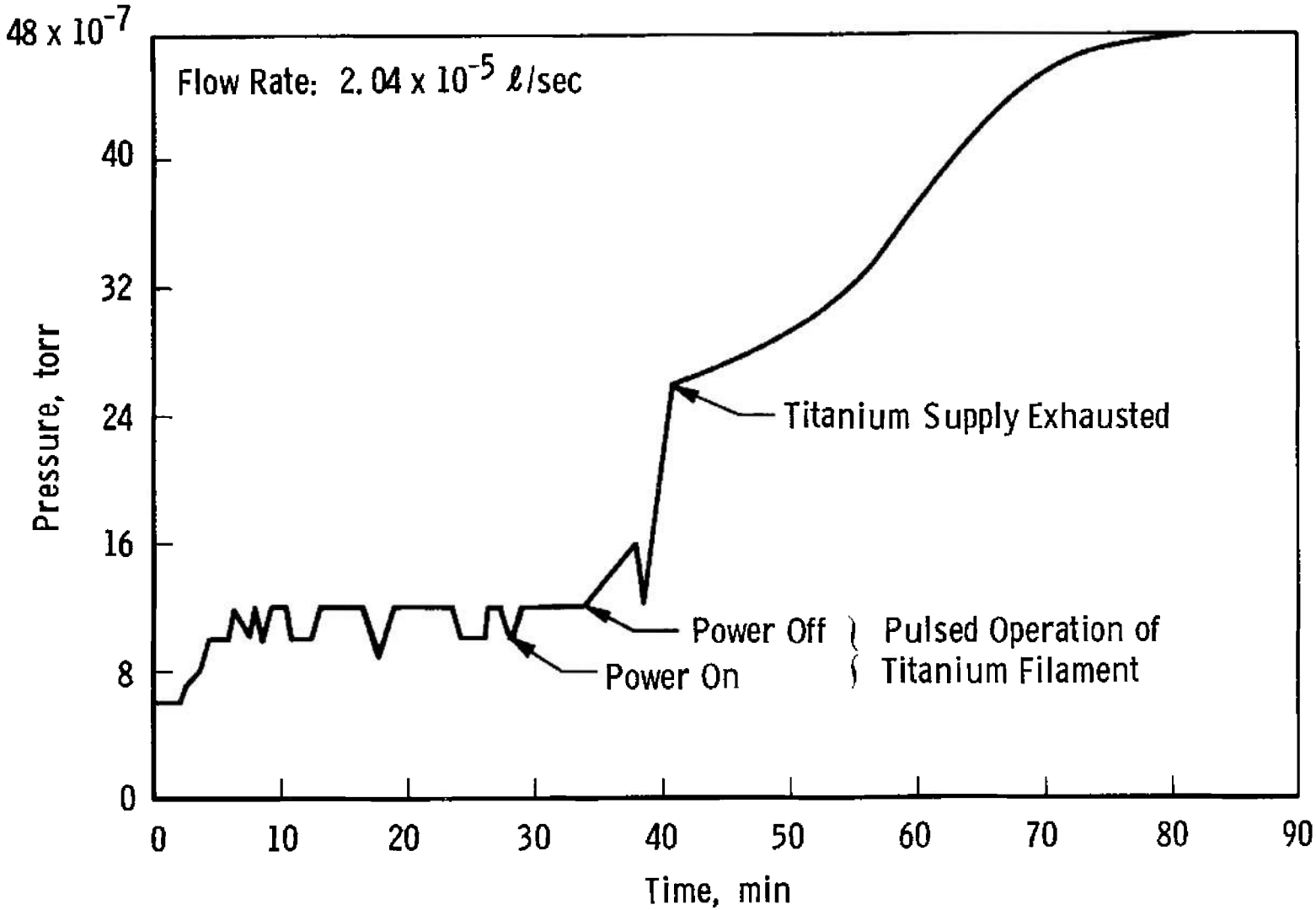

Fig. 10 Cell Pressure Time History Produced by Titanium Gettering on 77 and 20°K Surfaces

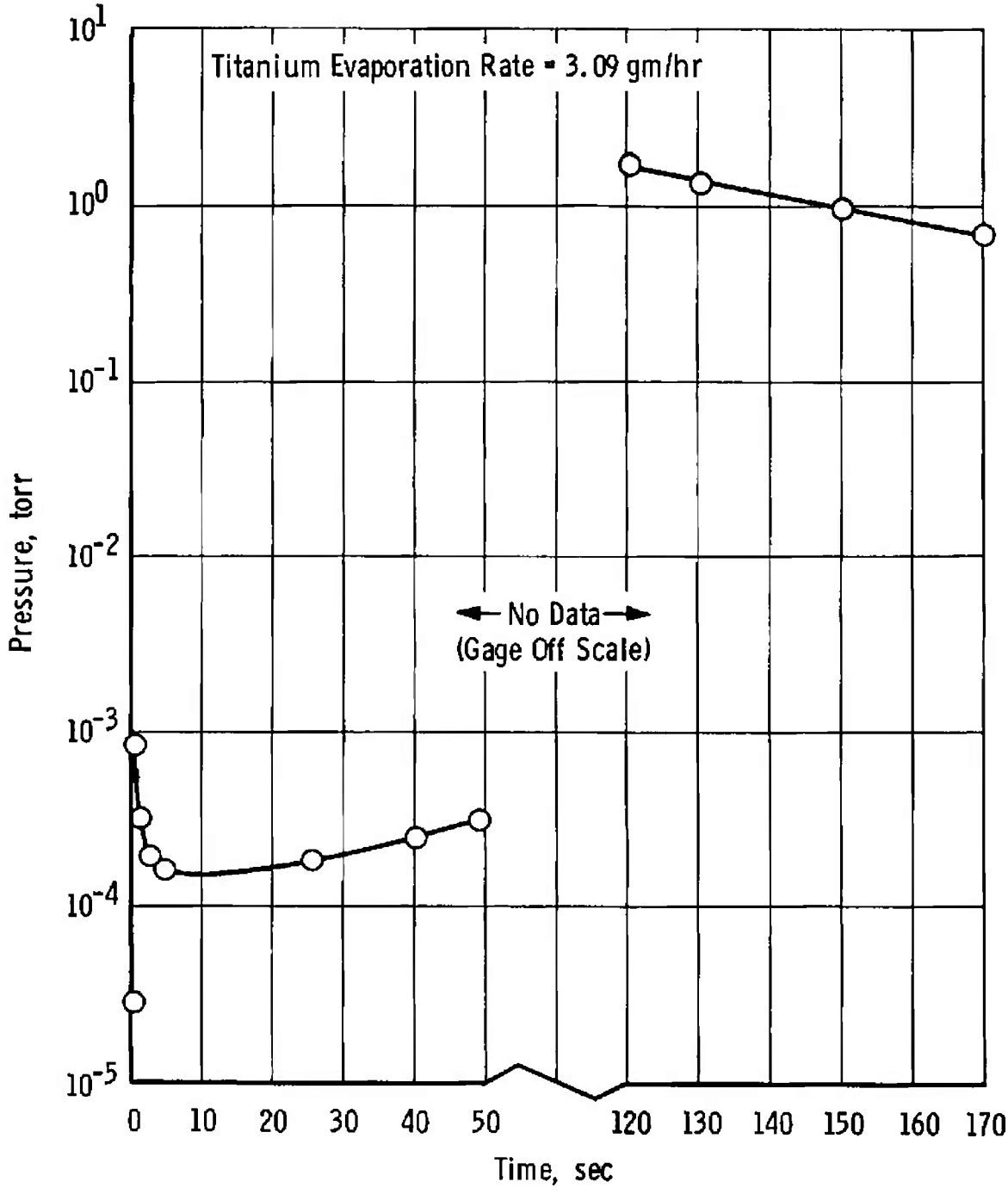

a. 12.1 torr-ℓ/sec

Fig. 11 Titanium Gettering of Room Temperature H_2 Gas on 77°K Surface

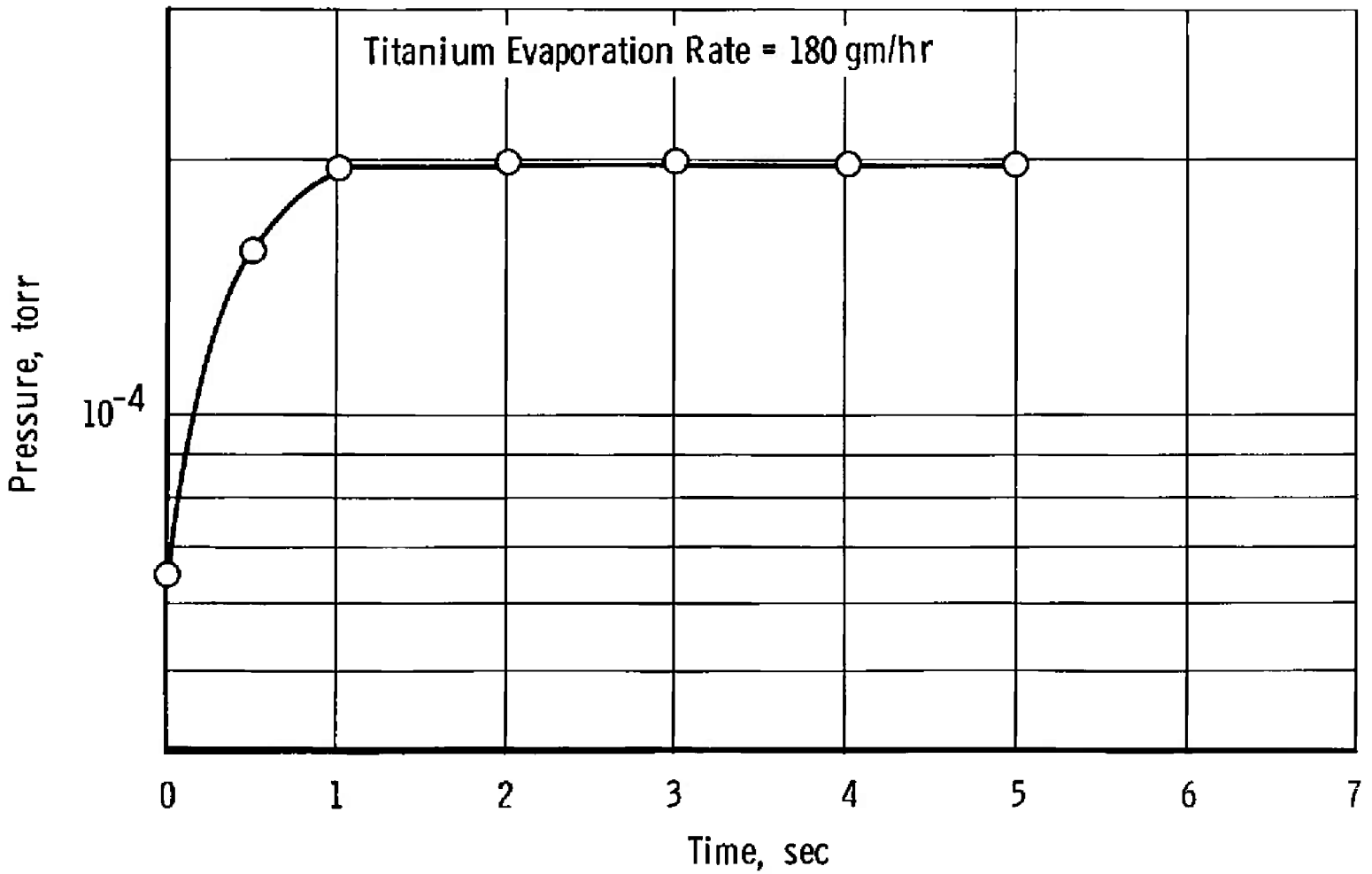

b. 11.3 torr-ℓ/sec

Fig. 11 Continued

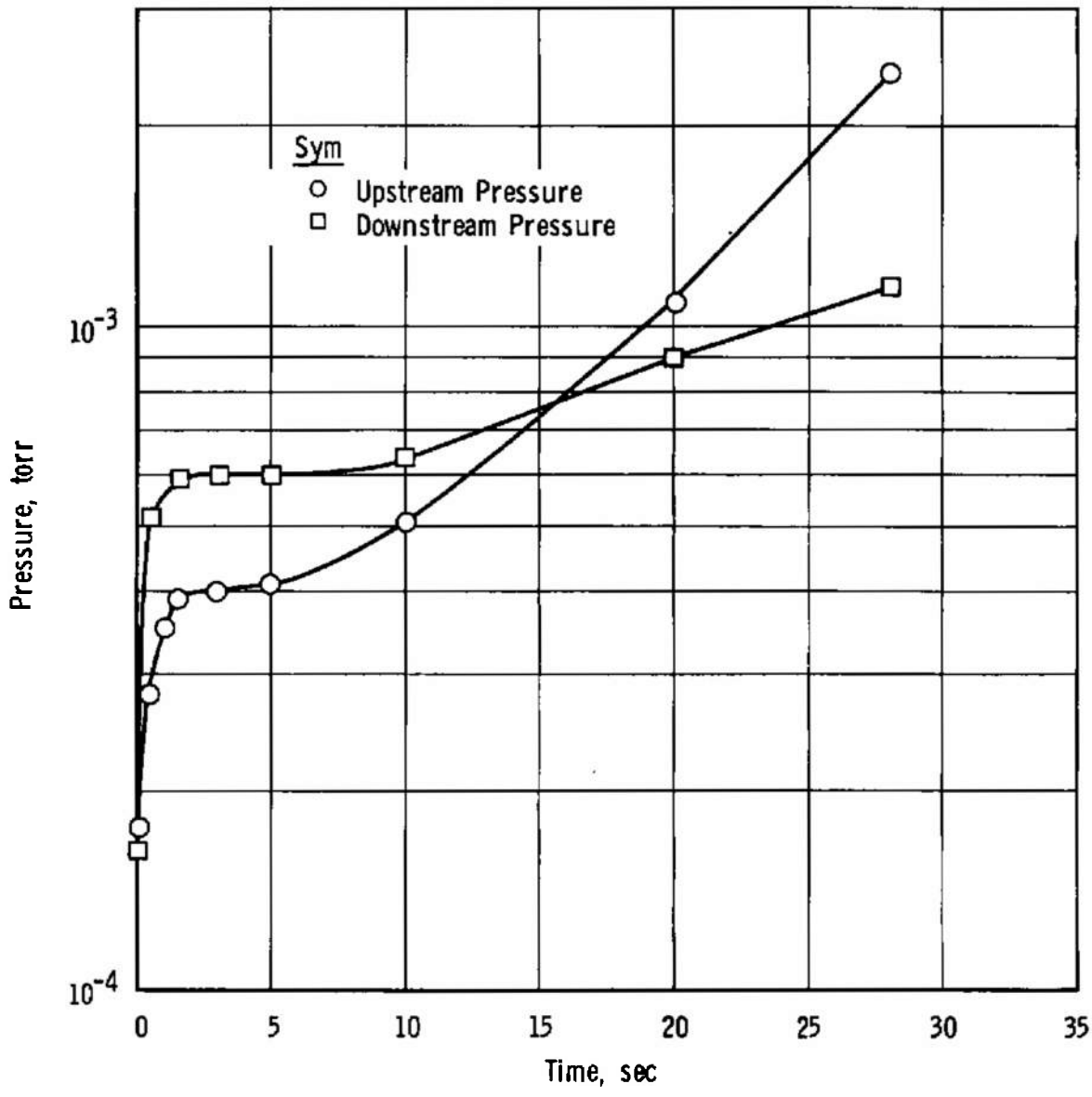

c. 18.3 torr-ℓ/sec

Fig. 11 Concluded

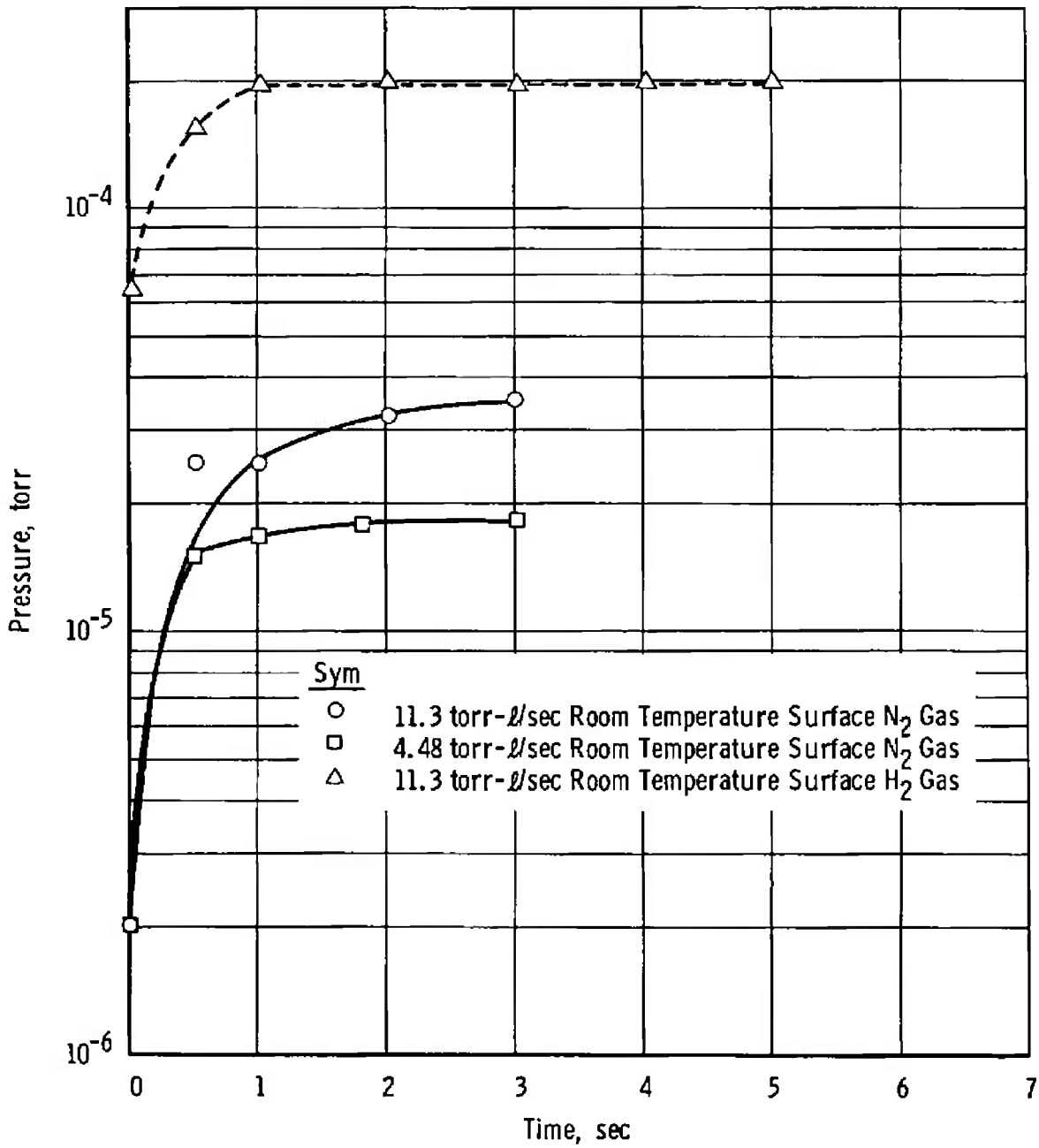

Fig. 12 Titanium Gettering of Room Temperature N_2 Gas on 77°K Surface

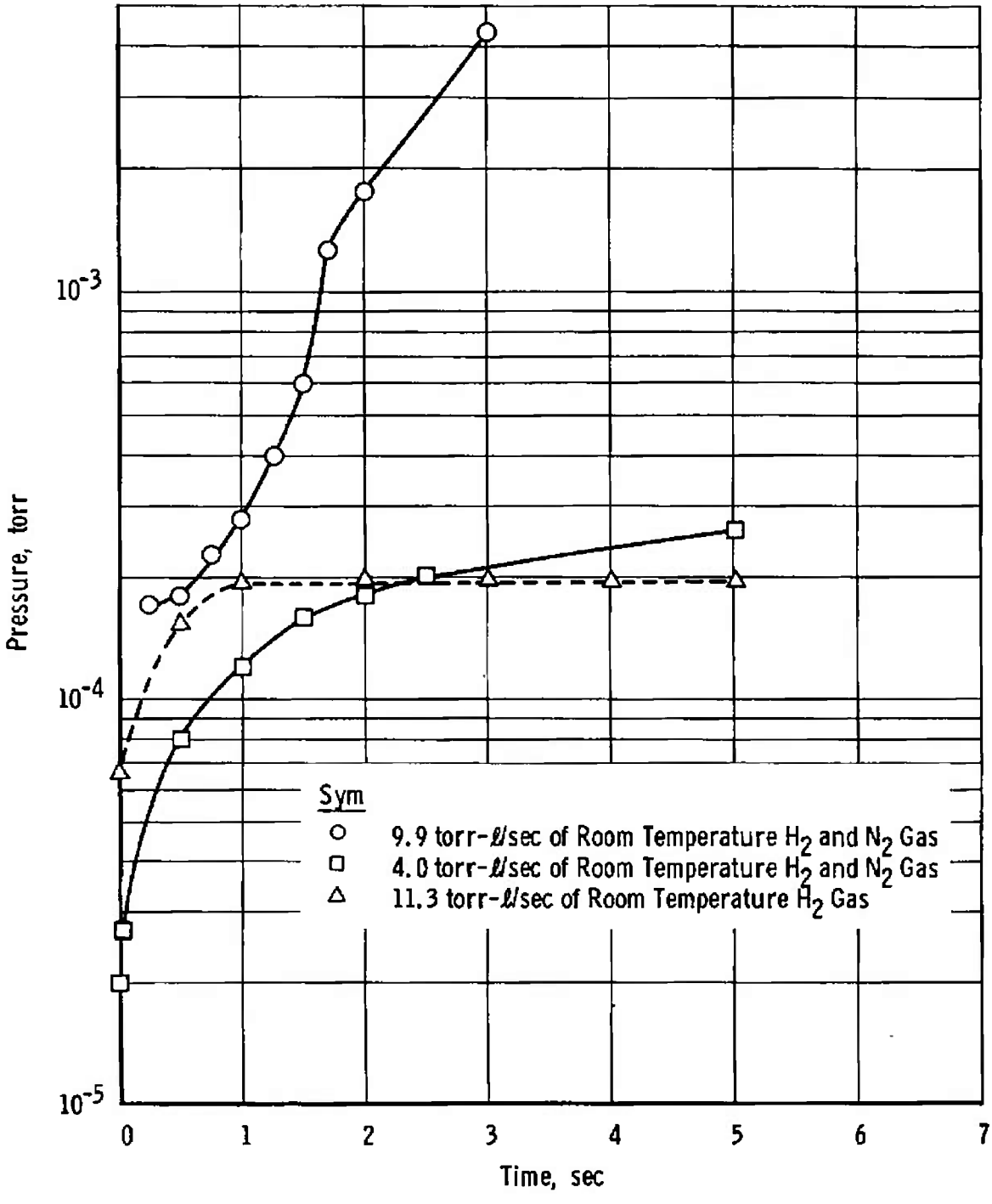

Fig. 13 Titanium Gettering of Room Temperature H_2 - N_2 Gas Mixture on 77°K Surface

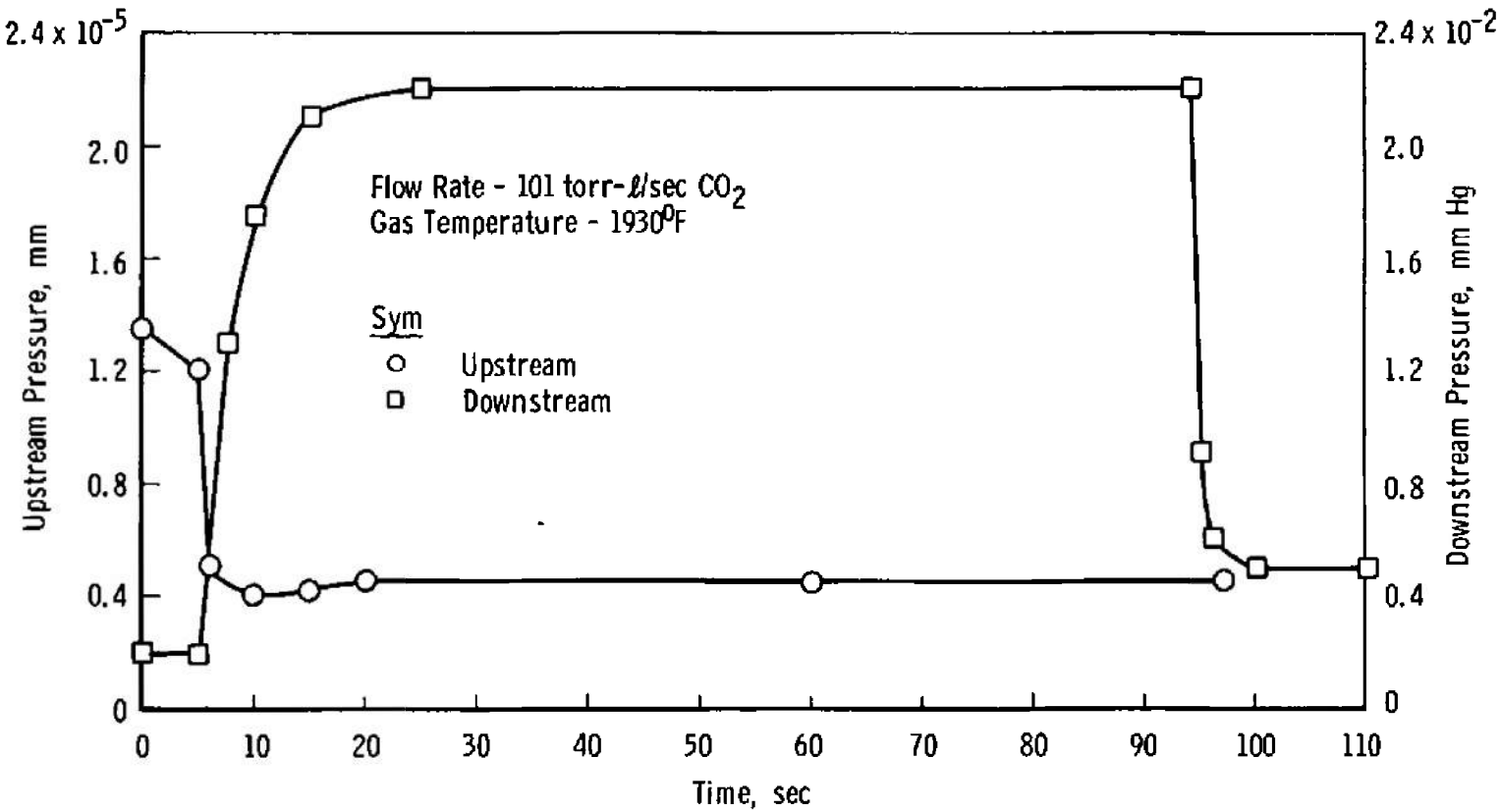

Fig. 14 Pressure versus Time for Operation of the First Stage of the Three-Stage Pumping System

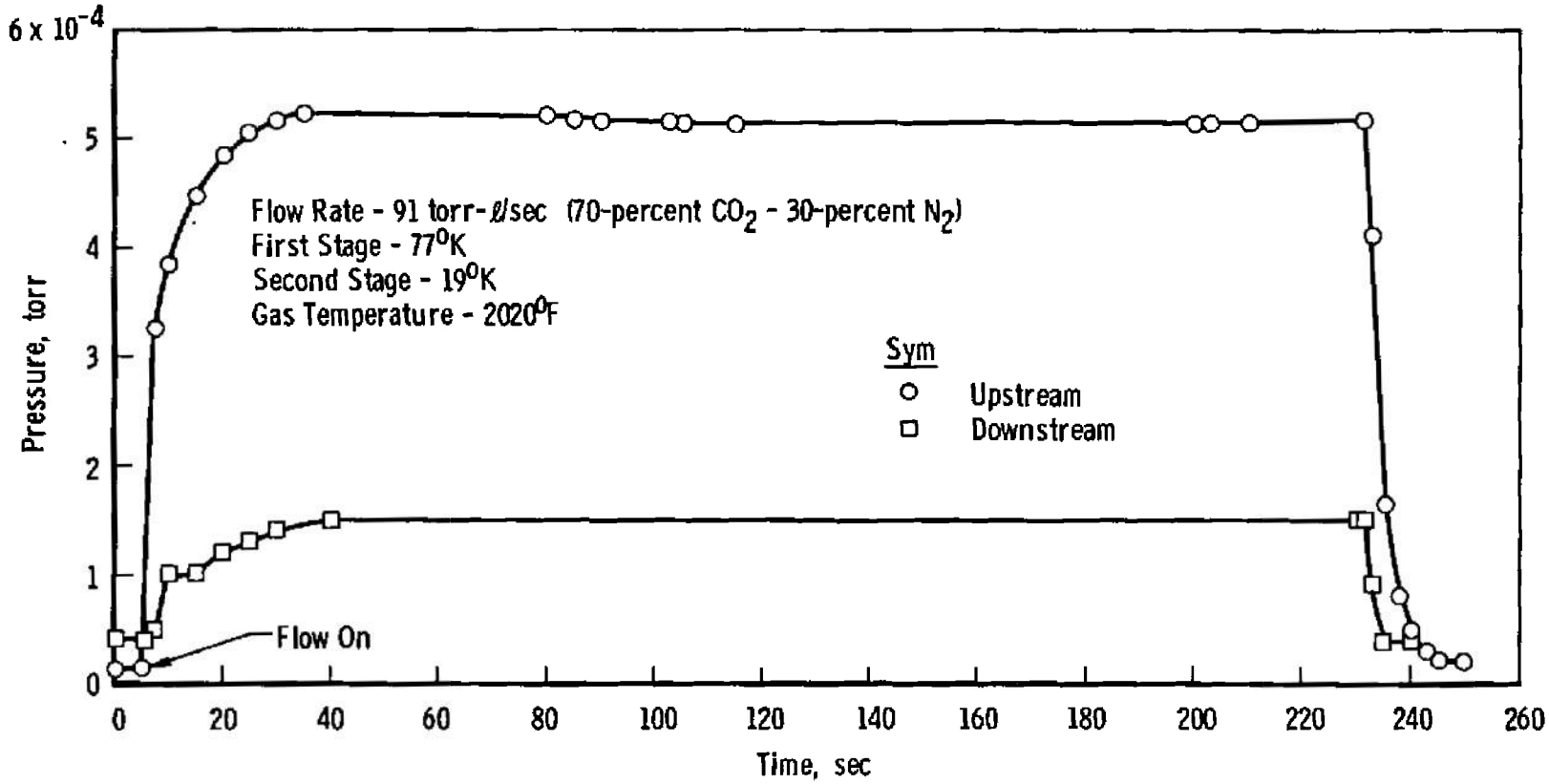

Fig. 15 Pressure versus Time for Operation of the First and Second Stage of the Three-Stage Pumping System

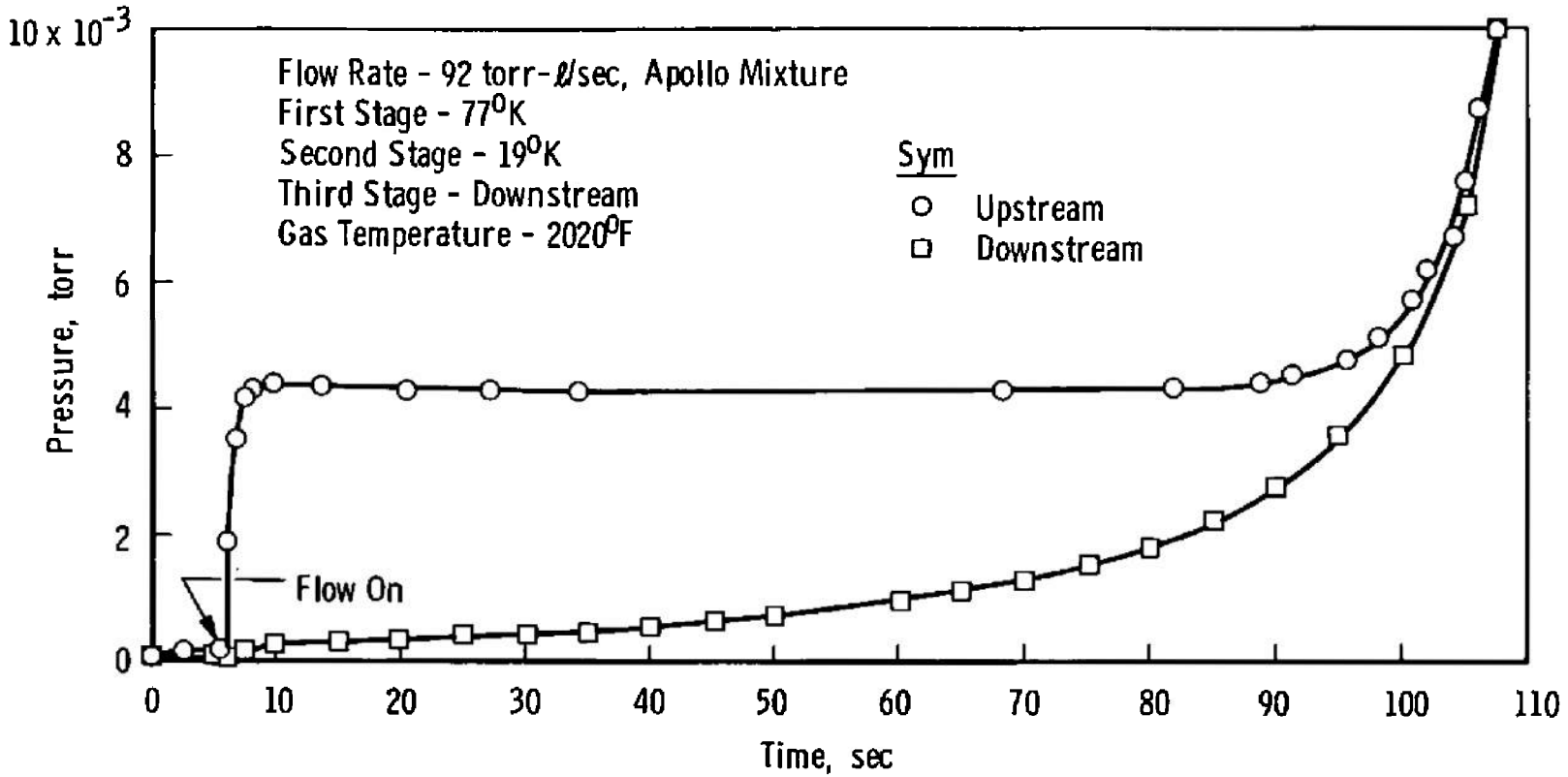

Fig. 16 Pressure versus Time for the Operation of the Three-Stage Pumping System

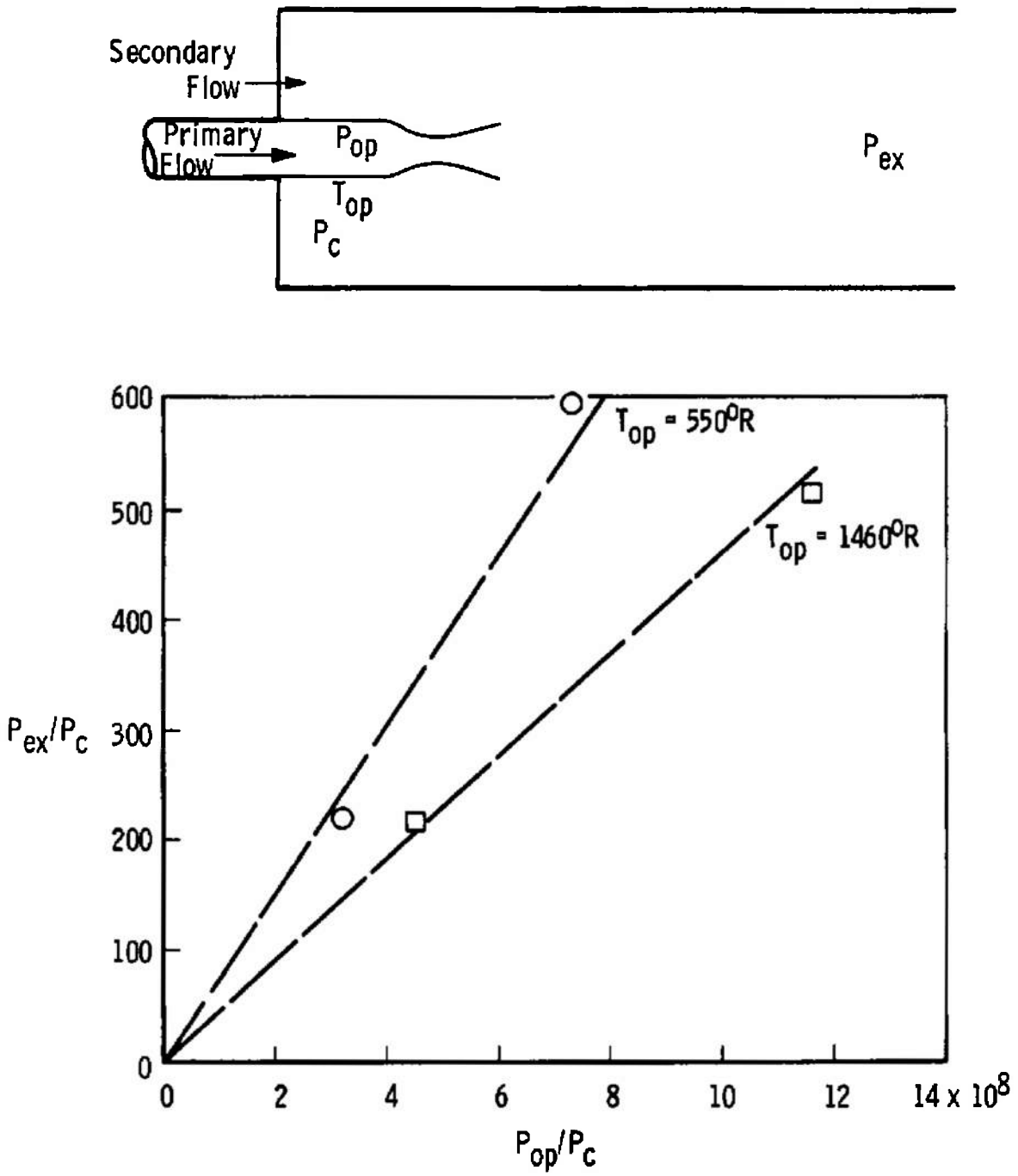

Fig. 17 Ejector Pumping Characteristics of Highly Unexpanded Jets

TABLE 1
SUMMARY OF PHASE 1 STAGED PUMPING

Run	Stage 1, torr-ℓ/sec	Stage 2, torr-ℓ/sec	Stage 3, torr-ℓ/sec	Amount Not Pumped, torr-ℓ/sec	Maximum Upstream Pressures during 3-sec Run, torr
1	1.03 (2.7 percent)	26.82 (70.2 percent)	6.17 (16.1 percent)	4.18 (10.5 percent)	1.9×10^{-2}
2	1.03 (2.7 percent)	25.7 (67.1 percent)	9.65 (25.3 percent)	1.85 (4.9 percent)	4.5×10^{-5}
3	1.03 (2.7 percent)	26.57 (69.6 percent)	8.01 (20.5 percent)	2.59 (6.8 percent)	2.25×10^{-5}
4	1.03 (2.7 percent)	37.08 (97 percent)		0.09 (0.24 percent)	2.8×10^{-5}

Gas mixture being pumped was 38.2 torr-ℓ/sec of 11.3-percent H_2, 65.1-percent N_2, 20.9-percent CO and 2.7-percent CO_2.

TABLE II
SUMMARY OF FIRST-STAGE PERFORMANCE (PHASE 2)

Upstream Equilibrium Pressure	Change of Upstream Pressure Caused by Injected CO_2	Temperature of Injected CO_2 Gas, °F	Rate of Removal of CO_2, torr-ℓ/sec
5.5×10^{-5}	5.1×10^{-5}	80	72
6.6×10^{-5}	6.1×10^{-5}	80	146
4.0×10^{-5}	3.5×10^{-5}	270	72
9.2×10^{-5}	8.3×10^{-5}	270	144
7.0×10^{-5}	6.6×10^{-5}	1175	72
7.8×10^{-5}	6.8×10^{-5}	1370	107
1.9×10^{-5}	1.75×10^{-5}	2050	104

TABLE III

EJECTOR CHARACTERISTICS OF TEST CONFIGURATION

Upstream Equilibrium Pressure	Change in Upstream Pressure Caused by Injected Mixture	Gas Temperature of Mixture, °F	Removal Rate of CO_2, torr-ℓ/sec	Removal Rate of N_2, torr-ℓ/sec
1.50×10^{-4}	1.38×10^{-4}	80	50.4	21.6
2.22×10^{-4}	2.07×10^{-4}	80	100.8	43.2
3.40×10^{-4}	3.15×10^{-4}	1340	77.0	33.0
5.15×10^{-4}	4.75×10^{-4}	2020	63.7	27.3

TABLE IV
PERFORMANCE OF STAGED PUMPING SYSTEM

Upstream of Pressure	Time of Equilibrium Pressure, sec	Gas Temperature, °F	Flow Rate, torr-ℓ/sec
4.10×10^{-3}	90	2020	92
3.50×10^{-3}	22.5	2020	92
4.15×10^{-3}	80	2020	92

Security Classification

DOCUMENT CONTROL DATA - R&D

(Security classification of title, body of abstract and indexing annotation must be entered when the overall report is classified)

1 ORIGINATING ACTIVITY *(Corporate author)*
Arnold Engineering Development Center,
ARO, Inc., Operating Contractor
Arnold Air Force Station, Tennessee

2a REPORT SECURITY CLASSIFICATION
UNCLASSIFIED

2b GROUP
N/A

3 REPORT TITLE
EXPERIMENTAL INVESTIGATION OF STAGED PUMPING TECHNIQUES FOR THE REMOVAL OF ROCKET EXHAUST GASES FROM SPACE SIMULATION CHAMBERS

4 DESCRIPTIVE NOTES *(Type of report and inclusive dates)*
N/A

5 AUTHOR(S) *(Last name, first name, initial)*
Kirby, W. G., and McCullough, B. A., ARO, Inc.

6 REPORT DATE
June 1966

7a TOTAL NO OF PAGES
48

7b NO OF REFS
9

8a CONTRACT OR GRANT NO.
AF40(600)-1200

b PROJECT NO 6950

c Program Element 62405184

d Task 695001

9a. ORIGINATOR'S REPORT NUMBER(S)
AEDC-TR-66-51

9b OTHER REPORT NO(S) *(Any other numbers that may be assigned this report)*
N/A

10 AVAILABILITY/LIMITATION NOTICES
Qualified requesters may obtain copies of this report from DDC and distribution of this document is unlimited.

11 SUPPLEMENTARY NOTES
N/A

12 SPONSORING MILITARY ACTIVITY
Arnold Engineering Development Center (AEDC),
Air Force Systems Command (AFSC)
Arnold Air Force Station, Tennessee

13 ABSTRACT

Results of an experimental investigation conducted to determine the feasibility of using titanium gettering to remove large flows of H_2 gas and of combining gettering and cryopumping in a staged pumping system to remove simulated rocket exhaust gases are presented. The staged pumping system (about 8 in. in diameter and less than 30 in. long) consisted of a 77°K cryopumping stage, a 20°K cryopumping stage, and a titanium gettering stage with 77°K surfaces. High temperature combustion exhaust gas mixtures, with flow rates up to about 0.3 gm/sec, were pumped, and a pressure level of about 10^{-3} torr was maintained.

DD FORM 1 JAN 64 1473

Security Classification

Security Classification

14 KEY WORDS	LINK A ROLE	LINK A WT	LINK B ROLE	LINK B WT	LINK C ROLE	LINK C WT
1 staged pumping						
2 rocket exhaust -- Removal						
3. space ~~simulation~~ chambers -- Exhaust removal						
4 ~~titanium~~ gettering						
5 cryopumping						
6. Exhaust -- Removal						
16-4						

INSTRUCTIONS

1. ORIGINATING ACTIVITY: Enter the name and address of the contractor, subcontractor, grantee, Department of Defense activity or other organization *(corporate author)* issuing the report.

2a. REPORT SECURITY CLASSIFICATION: Enter the overall security classification of the report. Indicate whether "Restricted Data" is included. Marking is to be in accordance with appropriate security regulations.

2b. GROUP: Automatic downgrading is specified in DoD Directive 5200.10 and Armed Forces Industrial Manual. Enter the group number. Also, when applicable, show that optional markings have been used for Group 3 and Group 4 as authorized.

3. REPORT TITLE: Enter the complete report title in all capital letters. Titles in all cases should be unclassified. If a meaningful title cannot be selected without classification, show title classification in all capitals in parenthesis immediately following the title.

4. DESCRIPTIVE NOTES: If appropriate, enter the type of report, e.g., interim, progress, summary, annual, or final. Give the inclusive dates when a specific reporting period is covered.

5. AUTHOR(S): Enter the name(s) of author(s) as shown on or in the report. Enter last name, first name, middle initial. If military, show rank and branch of service. The name of the principal author is an absolute minimum requirement.

6. REPORT DATE: Enter the date of the report as day, month, year; or month, year. If more than one date appears on the report, use date of publication.

7a. TOTAL NUMBER OF PAGES: The total page count should follow normal pagination procedures, i.e., enter the number of pages containing information.

7b. NUMBER OF REFERENCES: Enter the total number of references cited in the report.

8a. CONTRACT OR GRANT NUMBER: If appropriate, enter the applicable number of the contract or grant under which the report was written.

8b, 8c, & 8d. PROJECT NUMBER: Enter the appropriate military department identification, such as project number, subproject number, system numbers, task number, etc.

9a. ORIGINATOR'S REPORT NUMBER(S): Enter the official report number by which the document will be identified and controlled by the originating activity. This number must be unique to this report.

9b. OTHER REPORT NUMBER(S): If the report has been assigned any other report numbers *(either by the originator or by the sponsor)*, also enter this number(s).

10. AVAILABILITY/LIMITATION NOTICES: Enter any limitations on further dissemination of the report, other than those imposed by security classification, using standard statements such as:

(1) "Qualified requesters may obtain copies of this report from DDC."

(2) "Foreign announcement and dissemination of this report by DDC is not authorized."

(3) "U. S. Government agencies may obtain copies of this report directly from DDC. Other qualified DDC users shall request through _____."

(4) "U. S. military agencies may obtain copies of this report directly from DDC. Other qualified users shall request through _____."

(5) "All distribution of this report is controlled. Qualified DDC users shall request through _____."

If the report has been furnished to the Office of Technical Services, Department of Commerce, for sale to the public, indicate this fact and enter the price, if known.

11. SUPPLEMENTARY NOTES: Use for additional explanatory notes.

12. SPONSORING MILITARY ACTIVITY: Enter the name of the departmental project office or laboratory sponsoring *(paying for)* the research and development. Include address.

13. ABSTRACT: Enter an abstract giving a brief and factual summary of the document indicative of the report, even though it may also appear elsewhere in the body of the technical report. If additional space is required, a continuation sheet shall be attached.

It is highly desirable that the abstract of classified reports be unclassified. Each paragraph of the abstract shall end with an indication of the military security classification of the information in the paragraph, represented as *(TS)*, *(S)*, *(C)*, or *(U)*.

There is no limitation on the length of the abstract. However, the suggested length is from 150 to 225 words.

14. KEY WORDS: Key words are technically meaningful terms or short phrases that characterize a report and may be used as index entries for cataloging the report. Key words must be selected so that no security classification is required. Identifiers, such as equipment model designation, trade name, military project code name, geographic location, may be used as key words but will be followed by an indication of technical context. The assignment of links, rules, and weights is optional.

Security Classification