AD-633194

ALUMINUM ALLOY IN PROSTHETIC DENTISTRY:

TECHNICS AND APPLICATIONS

ACCESSION for
CFSTI WHITE SECTION
DDC BUFF SECTION
UNANNOUNCED
JUSTIFICATION
BY
DISTRIBUTION/AVAILABILITY CODES
DIST. AVAIL. and/or SPECIAL

by

Lucius L. Robinson, B.S., D.D.S.

Best Available Copy

D D C
JUN 3 1966

A thesis submitted in partial fulfillment of the
Requirements for the degree of Master of
Science in Denture Prosthesis in the
Horace H. Rackham School of
Graduate Studies of The
University of Michigan
Ann Arbor - 1966

ACKNOWLEDGMENTS

I wish to express my sincere appreciation to Dr. Corwin R. Wright for his inspiration, advice, and help during this study.

Dr. Brien Lang and Dr. Franklin Smith have been reliable and helpful consultants, which I greatly appreciate.

I am grateful to Dr. Kamal Asgar for his advice and for allowing me to utilize the facilities of the Department of Dental Materials.

I thank Mr. Ed Dootz for technical advice and for making the shell castings used in this study.

Mr. Joseph Eder spent many hours making measurements and also constructed the discrepancy charts. For this help I wish to express my sincere appreciation.

LIST OF TABLES

Table		Page
I.	COMPOSITION OF ALUMINUM ALLOYS	9
II.	ALLOYS TESTED FOR CORROSION IN SYNTHETIC SALIVA	10
III.	CASTING TECHNIQUES OF VARIOUS AUTHORS WITH ONE ALLOY (D-214)	11
IV.	COMPARATIVE PHYSICAL PROPERTIES OF BASE MATERIALS	16

LIST OF FIGURES

Figure		Page
1	Pattern Ready to Invest	21
2	Shell Casting	21
3	Discrepancy Chart - Gray Investment	25
4	Discrepancy Chart - Investic	26
5	Discrepancy Chart - Phosphate	27
6	Aluminum Partial Denture	31
7	Speech Aid	32
8	Surgical Splints with Saddle	35
9	Surgical Splints on Model	35
10	Splints Intraoral	37
11	Radiograph with Splints	37
12	Mounted Cast Illustrating Limited Denture Space	39
13	Aluminum Denture Base and Occlusals	39

TABLE OF CONTENTS

	Page
INTRODUCTION	1
REVIEW OF THE LITERATURE	3
Methods of Construction	6
Alcoa D-214 Alloy	9
Other Aluminum Casting Alloys	14
Properties of the Al-Mg Dental Alloys	15
Anodizing	17
Prosthetic Application of Aluminum Castings	18
Tissue Response	18
METHODOLOGY - PART I	20
Positioning the Castings on the Measuring Device	22
Method of Measurement	22
Results	24
Discussion	28
METHODOLOGY - PART II	30
Clasp Retained Aluminum Prosthesis	30
Results	33
Discussion	33
Surgical Splints	34
Results	34
Discussion	36
Aluminum Posterior Occlusal Surfaces	36
Results	38
Discussion	38
Other Clinical Observations	40
SUMMARY	41
Part I	41
Part II	42

Table of Contents (Continued) Page

CONCLUSIONS 43

REFERENCES 44

INTRODUCTION

Preservation of the supporting tissues is the most urgent goal of the prosthodontist today. Accurate denture bases and correct articulation are considered essential biomechanical requirements if this goal is to be obtained. Many dentists are acutely aware of the fact that our most commonly used denture base materials are inaccurate[1]. In the search for a satisfactory denture base, many materials have been tried. Aluminum has been used in denture construction for more than a century[2], but it has received inadequate evaluation. Recent reports[3-5] indicate that aluminum denture bases may fit accurately and are retentive; however, many basic questions pertinent to the use of aluminum as a denture base material have not been investigated in the clinic or the laboratory.

The most common use of aluminum as a denture material has been in constructing conventional complete denture bases. Only one aluminum alloy* has received appreciable use in America since its introduction in the 1930's. Application of modern metallurgical knowledge to formulate a new series of heat-treatable alloys for use by the dental profession would be much more desirable than evaluation of this old alloy. It is believed that further information concerning

---

*Alloy D-214, Aluminum Company of America

aluminum alloys and an evaluation of the various construction procedures would be of more value now, and could be carried over to be used with improved alloys should they become available.

Aluminum alloys can be used as a substitute for the heavier and more expensive metals often used to construct certain types of prostheses such as speech aid appliances and various types of surgical splints. No reports have been found to show that aluminum has been used to make these temporary or transitional appliances. The first part of this study is interested in testing laboratory procedures necessary to construct these appliances, and the second part is a clinical evaluation of a variety of aluminum prostheses.

REVIEW OF THE LITERATURE

Recent prosthetic textbooks* do not describe technics for using aluminum alloys. A review of the Journals of Prosthetic Dentistry reveal only one article[3] on aluminum. To a large extent the older texts and periodical literature that does describe dental procedures with aluminum are obsolete because of improvements in the alloys, casting machines, and investments.

Before considering several contributions separately, it is believed that a chronological listing of the development of aluminum with emphasis on its use in dentistry will be of interest, and provide a quick historical orientation for the present study.

1807 - Sir Humphrey Davy became convinced that alumina had a metallic base and gave it the name aluminum[6].

1820 - The first metal base denture (tin) was made by Dr. Edward Hudson of Philadelphia[7].

1825 - Aluminum first isolated as gray powder by Danish physicist H. C. Oersted[6].

1845 - Friedrick Wöhler of Berlin produced metallic particles of aluminum some "as large as big pin heads"; enough to determine its density and other important properties[6].

1855 - (A) Charles Goodyear patented a process of making denture bases of vulcanite[6]; (B) First introduction of aluminum to the public at the Paris Exposition[6].

---

*Boucher 64, Fish 64, Nagle and Sears 62, Sharry 62, Wright et al. 61, Fenn at al. 61, Landy 58, Gehl and Dresen 58.

1857 - H. Buff first discovered the behavior of aluminum when made anode in sulfuric solutions[9].

1858 - First denture made of aluminum by Berthe of Paris[2,7].

1866 - (A) Charles M. Hall of Oberlin, Ohio, discovered electrolytic production of aluminum which reduced the cost to 20 cents per pound by 1936[6]; (B) J. B. Bean of Baltimore first cast an aluminum denture base[2,10,11].

1869 - Almanzon Clark of Galesburg, Illinois, patented a method of attaching vulcanite to aluminum[12].

1873 - Sauer cast aluminum directly against porcelain teeth[10].

1885 - First successful aluminum dentures made by Blandy[7].

1887 - Carroll patented a process of blowing with a rubber bulb and tube to force molten aluminum into the mold[11].

1904 - W. R. Mott described several anodic processes and proposed use of anodic film for protection against corrosion and electrical insulation[9].

1907 - (A) Brophy described a method of jarring the molten aluminum into the mold[11]; (B) Taggart's method of casting gold inlays was published[13].

1908 - (A) Dayton Dunbar Campbell reports his "cow-bell" casting technic[14]; (B) J. H. Billmeyer reports the bucket casting technic[15].

1918 - Baughman reports a casting technic for aluminum using a split mold to eliminate the was pattern[16].

1921 - Klaffenbach reports casting aluminum partial dentures without clasps or rests[17].

1924 - Campbell extends the denture casting to include the peripheral borders[18].

1926 - Sitherwood calls attention to the preservation of the alveolar ridge by use of aluminum base dentures[12].

1936 - Campbell reports using an alloy (D-214) that does not require subsequent swaging for accurate fit[19].

1937 - Methyl methacrylate was found to be useful as denture base[8].

1949 - Tregarthen reports the technic of anodizing dentures is quite standardized[20].

1960 - Ryan of South Africa constructs skeleton partial dentures with a heat-treatable aluminum alloy[21].

1963 - (A) Lundquist favorably reports the accuracy of Alcoa D-214 castings using feeler gauges calibrated to .001 inch[3]; (B) Martins reports the favorable retention of aluminum base dentures as compared to resin dentures[4].

1965 - Barsoum, et al. find aluminum denture bases to be more accurate than resin bases when measured with a surface meter[5].

The items listed do not represent the complete story, but inspection of this list does reveal a number of points. First, only three years passed after aluminum was introduced to the public until it was used to construct denture bases; thus the advantage of having a light metal for dentistry was recognized early. Second, it appears that there has been some interest in aluminum down through the years, but more than a century passed after the first aluminum base denture was made until the first study of its accuracy as a denture material was reported. Third, although some writers have implied that aluminum dentures appear to have beneficial effects on the supporting tissues[12, 22], and others have indicated possible harmful tissue effects[23, 24], no controlled study of the tissue response to aluminum dentures has been reported.

Methods of Construction

The first aluminum dentures were made by swaging wrought aluminum sheets. Later castings were made that required swaging to improve the fit. During the last three decades castings without subsequent swaging have been utilized by most workers; however, Tregarthen[20] (1949) reports no preference for the cast technique or the swage procedure, using both frequently, and Sizeland-Coe[25] (1951) strongly recommends swaged dentures in preference to cast dentures.

Swaged Denture

Problems that have been associated with swage dentures include (1) contamination with base metals from the dies and counterdies which hastens corrosion[12, 17]; (2) difficulty in obtaining retention for the vulcanite or resin[12]; and (3) lack of tissue detail[25].

Many ingenious methods were developed to overcome these problems. Clark, in 1869, obtained a patent for a process of fastening teeth with vulcanized rubber to aluminum bases[12]. He chemically etched the aluminum to obtain retention for the rubber. Muller[26] (1906) described a method of making a double denture with the vulcanite being sandwiched between the two aluminum palates. Muller also placed bolts through the denture base with retentive undercut nuts to hold the vulcanite. Sitherwood[12] (1926) reports that prior to Clark's method, holes were punched in the aluminum for retention and later an instrument was made to turn a rim on the denture to obtain retention. More recently Sizeland-Coe[25] (1951) reports that retention lugs

can be brased on without expensive equipment. The early workers were unable to solder to aluminum. The Sizeland-Coe report is also the most recent to describe the technique for constructing swage aluminum dentures. He considers the smooth surface of the swage denture to be superior to the detail obtained from cast dentures.

Cast-swaged Dentures

From 1866, when Bean cast the first aluminum denture, until 1936 it was customary to swage the castings for satisfactory fit. A number of casting methods were developed. Bean's casting was made "under a column of air"[11]. Carroll patented a process of blowing with a rubber bulb and tube to force the molten metal into the mold[12]. Brophy (1907) reported a method of jarring the mold to vibrate the molten metal in place[11]. Campbell[14] (1908), Billmeyer[15] (1908), Sitherwood[12] (1926), and Baghel[27] (1929) report casting centrifugally by attaching a chain to the mold and swinging it in a circle by hand. This has been called the "cow-bell" or "bucket" technic. Baughman[16] (1918) forced the metal into the mold by pressure with a plunger over moldine, using steady hand pressure for approximately two minutes. Klaffenbach[17] (1921) applied a moistened pad to the hot mold to create steam pressure. Sitherwood[12], although using the cow-bell technic himself, reports the best laboratories in 1926 were using heavy centrifugal casting machines.

The alloys and investing technics used were as varied as the casting methods. Most of the alloys contained from 90 to 98 per cent aluminum with various amounts of platinum, silver, copper, and tin[11, 12]. The investments, if reported, were the standard crown and bridge investments of the period or homemade investments[28]. Correct mold temperatures for casting were usually reported as "when glowing red"[29], "until no smoke is given off"[27], or "until no moisture is present"[16]. Baughman's[16] technic differs from the others in that a split mold was used which was opened to flush out the wax pattern with boiling water.

During the period that others were swaging their casting, Sauer (1873) cast aluminum directly to porcelain teeth[10].

Cast Dentures

In 1936 Campbell[19] reported castings using alloy D-214* in which the shrinkage and distortion was so slight that subsequent swaging was unnecessary. Since that time only two reports have been found in which the casting alloy was specified that did not utilize D-214.

Neill[29] (1958) reports using a commercial grade (not superpurity type) alloy with 5 per cent magnesium, and Ryan[21] (1960) uses a duralumin type alloy for constructing skeleton partial dentures. A comparison of the composition of these alloys is shown in Table I.

*Aluminum Company of America

Table I

COMPOSITION OF ALUMINUM ALLOYS

	PERCENTAGES								
	Mg.	Zn	Cu	Fe	Si	Be	Ni	Ti	Mn
Commercial-214[30]	4.0	.1	.1	.4	.3	-	-	-	-
Dental-214[31]	3.93	.00	.00	.01	.05	.001	.00	.01	.00
Neills alloy[29]	5.	-	-	-	-	-	-	-	-
Duralumin K[21]	2.25	6.	1-1.25	-	-	-	-	-	-

Alcoa D-214 Alloy

Alloy D-214 is a modification of a commercial sand-casting alloy that is noted for its corrosion resistance, even in marine atmospheres. Additions of silicon are sometimes included to improve casting and mechanical properties in industry[30]. The chief difference between the commercial and the dental 214 alloy is in the purity of the aluminum used.

In 1936 the Aluminum Company of America conducted laboratory tests which showed that the purity of the aluminum is a significant factor in corrosion[32]. In these tests, polished disks of four alloys (Table II) were immersed in synthetic saliva for nearly one year and then evaluated by the amount of weight lost and by their general appearance. The alloy (D-214) which contained 99.95 per cent purity aluminum was far superior to those that contained 99.7 per cent purity aluminum. On the basis of this study they stress that it is essential

that the material be carefully handled to prevent contamination during manufacture and use.

Table II

ALLOYS TESTED FOR CORROSION
IN SYNTHETIC SALIVA[32]

Alloy	Percentages					
	Ag	Cu	Ni	Mg	Bal. Al Purity	Weight Loss
Dental alloy	2	1.75	.5	.2	99	37.17
Alloy A	2	-	-	3.75	99.7	12.86
Alloy B	-	-	-	3.75	99.7	3.81
D-214	-	-	-	3.75	99.95	0.04

Besides Campbell's[19] (1936) original report of alloy D-214, several others, including Lucia[33] (1961), Granger[34] (1962), Martins[4] (1963), Lundquist[3] (1963), and Barsoum[5] (1965), have reported using this alloy. It is interesting to note differences in the technics they have used. Some of these are shown in Table III.

Table III

CASTING TECHNIQUES OF VARIOUS AUTHORS
WITH ONE ALLOY (D-214)

	Prosthesis	Investment	Casting Mold Temperature
Campbell[19] (1936)	Denture base	Homemade	Hot or cold mold
Lucia[33] (1961)	Denture base	Model[1] Cristobalite	200° F
Lucia[33] (1961)	Clutch	Any casting investment	Room temperature
Martins, et al[4] (1963)	Denture base	Gray investment[2]	700° F
Lundquist[3] (1963)	Denture base	Gray investment[2]	650° F
Barsoum[5] (1965)	Denture base	Gray investment[2]	800° F

1 - Kerr Manufacturing Company, Detroit
2 - Ransom and Randolph Company, Toledo, Ohio

The various workers with D-214 also specify different waxing, sprueing, and venting methods which, when combined with the variations shown in Table IV, cause some confusion to the operator that is first attempting to cast aluminum. Actually the investments are of similar type and the temperature range rather narrow. It appears the colder mold is recommended to obtain a good surface on the casting, while those recommending temperatures around 700° F desire to cast at the low end of the thermal expansion plateau to partially

compensate for metal shrinkage.

The study by Martins, et al.[4] (1963) evaluated the retention of aluminum base dentures and resin dentures on models and patients with intermediate films of human saliva or water having different surface tension values. They found cast aluminum denture bases exhibit higher retention values than resin dentures in both the patient's mouth and on the models when saliva was used as the intermediate liquid. This study used two patients,

Lundquist[3] was the first to report a study to measure the accuracy of aluminum denture castings. He made ten denture bases with compression molded methyl methacrylate, ten denture bases with unidirectionally molded methyl methacrylate, and ten denture bases with cast aluminum alloy D-214, using a machined metal die as the standard, which was duplicated to provide all master casts. Feeler gauges were used to measure the space between the denture bases and the palatal region of the cast. The resin denture bases had a space between the cast and the denture, which averaged 20 thousandths of an inch, while this space with the aluminum bases averaged only 1.5 thousandths of an inch. The sprues were removed from the casting and an acrylic resin was processed over the casting to determine any distortion of the casting by the processing of the resin. The average space between the denture base and the hydrocal cast was 2.2 thousandths of an inch after processing.

In a three year period, Lundquist inserted more than 300 complete dentures with cast aluminum bases. These dentures were made with acrylic resin for the borders and posterior palatal seal and a thin layer of resin covered the palatal area which eliminates the need for a finishing line on the casting.

From his research and clinical evaluation Lundquist reports the following observations: (1) The more accurate aluminum bases allow more accuracy in the occlusion, and the two combined contribute to the health of the tissues; (2) The castings provide more accurate registration of the maxillomandibular relationships than trial baseplates; (3) Breakage is minimal; (4) Cost of the alloy is negligible; (5) The dentures can be relined; (6) Cleaning is best done using soap, water, and a brush, because the commercial preparations in which dentures are soaked overnight causes pitting of the aluminum; (7) Approximately one-fourth of patients have a dull gray discoloration of the metal, which is associated with inadequate cleaning, and (8) Anodizing the castings is recommended.

In a recent study Barsoum, Eder, and Asgar[5] (1965) compare the accuracy of fit of aluminum base dentures and resin dentures with a surface meter. Their study indicates that aluminum can be cast to fit more accurately than dentures made from heat cure or cold cure compression molded resin.

Other Aluminum Casting Alloys

In England a commercial alloy containing 5 per cent magnesium has been used to construct dentures[29]. The properties and uses of this alloy are very similar to those reported for D-214. In casting this alloy fluxes, grain refining agents, and drossing-off compounds are used. The technic reported for casting this alloy utilizes a combination of heating in an open furnace and melting with a gas-air blow pipe. Most workers using D-214 melt the alloy in an electric furnace, preferably with an electric induction casting machine. The difference in melting technic could account for the additives some recommend for casting.

Ryan[21] (1960), of South Africa, appears to be the first to use an aluminum alloy in dentistry that shows significant changes in its properties following heat treatment. The composition of this alloy is given in Table I. Exact mechanical properties for dental castings with this alloy are not available, but Ryan indicates the ultimate tensile strength is 36 tons/in.^{2} which is approximately four times higher than other dental aluminums, and the hardness test indicates it is much harder than alloy D-214. Upper and lower skeleton partial dentures with cast clasp have been constructed "for many patients over recent years" at low cost with Duralumin K[21]. The heat treatment is a solution treatment for one hour at 460°C ending with a quench in cold water. Then a precipitation treatment is used for ten hours at 135° C to age harden the casting.

Other Aluminum Casting Alloys

In England a commercial alloy containing 5 per cent magnesium has been used to construct dentures[29]. The properties and uses of this alloy are very similar to those reported for D-214. In casting this alloy fluxes, grain refining agents, and drossing-off compounds are used. The technic reported for casting this alloy utilizes a combination of heating in an open furnace and melting with a gas-air blow pipe. Most workers using D-214 melt the alloy in an electric furnace, preferably with an electric induction casting machine. The difference in melting technic could account for the additives some recommend for casting.

Ryan[21] (1960), of South Africa, appears to be the first to use an aluminum alloy in dentistry that shows significant changes in its properties following heat treatment. The composition of this alloy is given in Table I. Exact mechanical properties for dental castings with this alloy are not available, but Ryan indicates the ultimate tensile strength is 36 tons/in.^{2} which is approximately four times higher than other dental aluminums, and the hardness test indicates it is much harder than alloy D-214. Upper and lower skeleton partial dentures with cast clasp have been constructed "for many patients over recent years" at low cost with Duralumin K[21]. The heat treatment is a solution treatment for one hour at 460°C ending with a quench in cold water. Then a precipitation treatment is used for ten hours at 135° C to age harden the casting.

Properties of the Al-Mg Dental Alloys

Aluminum is the third most abundant element on the earth's surface, yet it is the most modern of the common metals[35]. It is noted for its lightness and its natural surface oxidation to form a thin transparent coating that protects it from further oxidation except with substances that can dissolve this oxide coating.

Typical mechanical properties that have been reported[29, 36] for the dental alloys indicate, in general, that they are superior to acrylic resin but inferior to hardened partial denture gold and chrome-cobalt alloys in the properties considered desirable for denture bases[37, 38]. The Brinell hardness number for these alloys has been reported as 50[36] and 68[29] which is double that for acrylic resin but only one-fourth as hard as heat treated denture gold.

The elastic modulus of Al-Mg dental aluminum is much higher than for resins and approaches the figure for gold. The chrome cobalt alloys are about three times as rigid as aluminum. The ultimate tensile strength for the aluminum alloys is approximately three times that for resin but much less than gold[29, 36-38]. The yield strength for both denture gold and chrome cobalt is in the range of 60 to 90 thousand psi[38], while this value for dental aluminum is reported as 12[36] and 19[29] thousand psi. Being inexpensive and light, the aluminum prosthesis can be thicker than gold to compensate for the lower yield strength. No studies have been reported to evaluate if deformation of aluminum dentures occurs under function. Mandibular dentures

Properties of the Al-Mg Dental Alloys

Aluminum is the third most abundant element on the earth's surface, yet it is the most modern of the common metals[35]. It is noted for its lightness and its natural surface oxidation to form a thin transparent coating that protects it from further oxidation except with substances that can dissolve this oxide coating.

Typical mechanical properties that have been reported[29, 36] for the dental alloys indicate, in general, that they are superior to acrylic resin but inferior to hardened partial denture gold and chrome-cobalt alloys in the properties considered desirable for denture bases[37, 38]. The Brinell hardness number for these alloys has been reported as 50[36] and 68[29] which is double that for acrylic resin but only one-fourth as hard as heat treated denture gold.

The elastic modulus of Al-Mg dental aluminum is much higher than for resins and approaches the figure for gold. The chrome cobalt alloys are about three times as rigid as aluminum. The ultimate tensile strength for the aluminum alloys is approximately three times that for resin but much less than gold[29, 36-38]. The yield strength for both denture gold and chrome cobalt is in the range of 60 to 90 thousand psi[38], while this value for dental aluminum is reported as 12[36] and 19[29] thousand psi. Being inexpensive and light, the aluminum prosthesis can be thicker than gold to compensate for the lower yield strength. No studies have been reported to evaluate if deformation of aluminum dentures occurs under function. Mandibular dentures

should be thick in cross-section in the anterior region to lessen the danger of permanent deformation.

Dental aluminum has a higher percentage elongation than other denture base materials[29, 38]. This is helpful to those who swage their dentures. The properties of aluminum casting alloys depend on the alloying constituents and heat treatment processes used. The aluminum magnesium alloys in the proportions now used in dentistry are not subject to heat treatment[39] (Ryan's alloy contains copper). Some of the physical properties of aluminum alloys are shown in Table IV.

Table IV

COMPARATIVE PHYSICAL PROPERTIES

Properties	Hardened Partial Denture Golds[37]	Chrome-Cobalt Alloys[37]	Alcoa D-214[36]	5% Magnesium Aluminum Alloys[29]	Acrylic Resin[37]
Melting Temperature or Range °F	1630 1740	2350 2650	1110 1185	1076 1184	--
Coefficient of Thermal Expansion (/°C x 10^{-6})	14.4 (pure gold)	--	23.94	--	81
Casting Shrinkage%	1.25 - 1.7	2.3	1.3 - 0.83	--	--
Thermal Conductivity (cal/sec/cm/°C/cm^2)	0.71 (pure gold)	--	0.33	-- .4 c.g.s.	5.7×10^{-4}
Density gm/cc	14.0 - 15	8.3	2.65	2.66	1.2 1.8

should be thick in cross-section in the anterior region to lessen the danger of permanent deformation.

Dental aluminum has a higher percentage elongation than other denture base materials[29, 38]. This is helpful to those who swage their dentures. The properties of aluminum casting alloys depend on the alloying constituents and heat treatment processes used. The aluminum magnesium alloys in the proportions now used in dentistry are not subject to heat treatment[39] (Ryan's alloy contains copper). Some of the physical properties of aluminum alloys are shown in Table IV.

Table IV

COMPARATIVE PHYSICAL PROPERTIES

Properties	Hardened Partial Denture Golds[37]	Chrome-Cobalt Alloys[37]	Alcoa D-214[36]	5% Magnesium Aluminum Alloys[29]	Acrylic Resin[37]
Melting Temperature or Range °F	1630 1740	2350 2650	1110 1185	1076 1184	--
Coefficient of Thermal Expansion ($/^{o}C x 10^{-6}$)	14.4 (pure gold)	--	23.94	--	81
Casting Shrinkage%	1.25 - 1.7	2.3	1.3 - 0.83	--	--
Thermal Conductivity (cal/sec/cm/ °C/cm^2)	0.71 (pure gold)	--	0.33	-- .4 c.g.s.	$5.7 x 10^{-4}$
Density gm/cc	14.0 - 15	8.3	2.65	2.66	1.2 1.8

Aluminum and magnesium are anodic to other metals used in dentistry. Neill[29], Lain[23], and others[24] have suggested that aluminum be limited to edentulous patients or those who have no dissimilar metal in the mouth, to lessen galvanic corrosion or electrogalvanic lesions.

Anodizing

Anodizing is an electrochemical method whereby the surface of aluminum is converted to an oxide when the metal is made anode in certain electrolytes. The physical and mechanical properties of these oxide coatings are unlike the metal itself, being much more resistant to corrosion and abrasion[40]. Anodizing also allows the aluminum to be colored. The oxide coating formed at first is porous with five hundred billion pores per square inch of surface under certain processing conditions. This porous coating, which is believed to be an amorphous aluminum oxide, will absorb dyes. Boiling water, or other treatments, converts this coating to the mono-hydrate ($Al_2O_3 \cdot H_2O$) which has a greater volume, and as a result the hydration action seals the pores[41].

Many authors have suggested that aluminum dentures be anodized. Neill[29] (1958), Tregarthen[42] (1944), (1949)[20], and Ryan[21] (1960) have described their technic for anodizing the alloys for use in the mouth.

Prosthetic Applications of Aluminum Castings

While most aluminum prostheses have been complete dentures, it has had limited use in the construction of partial dentures[17, 21, 25, 29], clutches for gnathological procedures[33, 34], impression trays for mucostatic technics[33, 34], surgical splints[43], and antrum restorations[25].

Klaffenback[17] (1921), Sizeland-Coe[25] (1951), and Neill[29] have suggested tissue-borne partial dentures without clasp or rest could be made with aluminum, and Ryan[21] (1960) used duralumin to construct skeleton partial dentures with cast aluminum clasp. He also incorporated clasps of stellite alloy in the aluminum castings.

Reverse Kingsley type splints for fixation of maxillary fractures have been constructed by casting aluminum onto heavy extra-oral steel wire[43]. Casting aluminum onto another metal was reported as early as 1908 by Campbell[14]. He cast onto loops of German silver to gain retention for the denture vulcanite. There is no fusion of these metals, their union being mechanical. Galvanic action from such unions of dissimilar metal has not been reported. No details of the "antrum restorations in conjunction with upper dentures or other facial injuries, where filling out is essential"[25], is reported.

Tissue Response

For years many dental authorities have stated that the soft tissues remain more nearly normal if the denture has a metal base[22];

however, this is unproven on the basis of experimental data. Sitherwood[12] (1926) suggested aluminum dentures might aid in the preservation of the alveolar ridge. Lundquist[3] has reported the largest series of clinical cases and reports the tissues maintain health under aluminum dentures, which he correctly relates to occlusion. Nyquist[44] reports that Thouren (1918) examined a series of 34 patients with full dentures made of aluminum and found 38 per cent presented inflammatory changes, often over the whole of the surface covered by the dentures. These dentures were from one to 22 years old, and no data is given to correlate other factors.

METHODOLOGY - PART I

A hydrocal* master cast was obtained by making an alginate** impression of a Columbia Dentoform edentulous maxillary model. This cast was duplicated using laboratory hydrocolloid and refractory casts were poured. An individual duplication of the stone cast was required for each refractory cast. Three investment casts were made of gray investment***, three of investic+, and three of multivest***, following the manufacturers' recommended water-powder ratio. These casts were waxed with one thickness of baseplate wax. The gray and the investic casts were sprued with three sprues, and one air vent provided and invested in the usual manner (Fig. 1). The multivest casts were sprued with a "Y" shaped sprue attached to the maxillary tuberosities with vents from the peripheral borders and invested using the rapid jelling shell investment procedure[45] (Fig. 2). For the gray and investic casting the burnout was accomplished at 1300°F and the ring allowed to cool in the oven to 700°F. Wax elimination for the multivest casting was accomplished in an oven preheated to 2000°F, and then the mold was transferred to another oven to cool to 700°F.

---

*Velmix - Kerr Manufacturing Company
**Jeltrate - J. D. Caulk Company
***Ransom and Randolph Company
+Ticonium Division of CMP Industries, Inc.

Fig. 1. Typical wax-up used for investic and gray castings

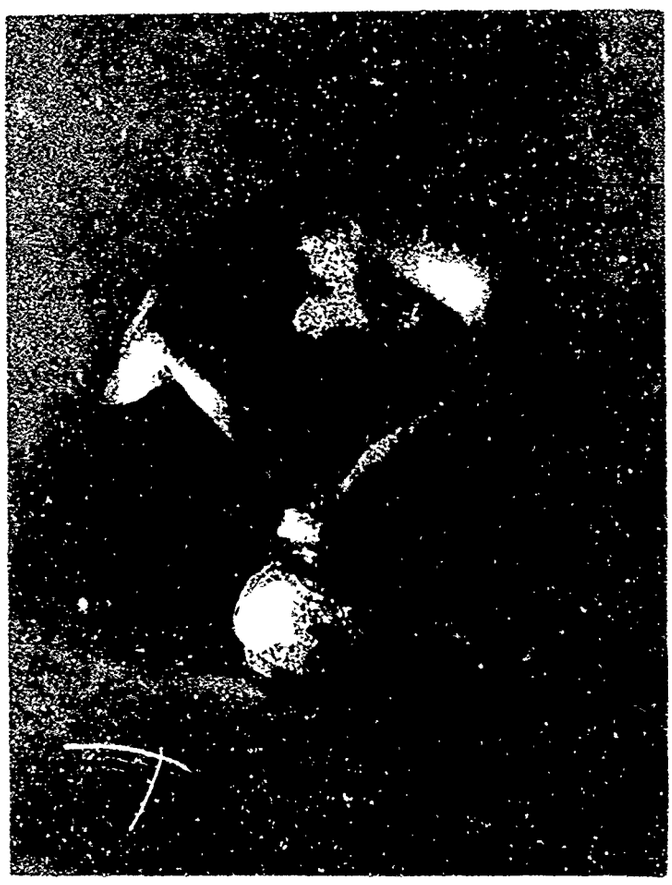

Fig. 2. A casting made with the shell investing technic showing the method of sprueing used

All castings were made in an induction melting, centrifugal casting machine*, and a new alloy** was melted for each casting.

After bench cooling ten minutes the molds were quenched and the castings recovered. The sprues were removed and the castings were ready to be measured.

Positioning the Castings on the Measuring Device

The master cast was attached to a tripod so the cast could be suspended above the center of a mounting platform. Each leg of the tripod fit accurately into indentations on the rim of the platform. The castings were lightly seated on the master cast, luted with wax, and suspended over the platform. Plaster was placed around the castings, which when set, would hold them in place on the platform ready for measuring when the master model and tripod were removed and set aside until needed to mount the next casting. The idea was to have each casting oriented identically, the only variation being the fit of the different castings on the master model.

Method of Measurement

The platform on which the castings were secured could be moved horizontally by turning a crank. This movement could be adjusted to .001 inch. The platform could also be rotated 360°. A dial

---

*Williams Inductocast
**D-214

micrometer was fixed in a vertical position above the casting so that the measuring tip of the micrometer could be lowered to contact the casting and measure the relative vertical position of different points on the casting which were brought under the dial micrometer as the platform was moved.

The initial measurement was made near the center of the palatal region. The platform holding the casting was then moved in a horizontal plane and a measurement was made at intervals of .050 inch until the denture border was reached or until the reading on the dial fell below 500. The horizontal platform was then returned to the initial point, rotated 24°, and another series of measurements were made as the platform was moved horizontally. This was continued until the entire area had been measured. All castings were measured in this manner. An improved stone impression was made of the master cast which was measured in the same manner to provide a standard to which the castings could be compared.

The measurements for the three castings made in gray investment were averaged and the mean of these readings was compared to the master measurements by plotting both series of measurements on graph paper and connecting the points to form contour lines. Compensations were made for the inaccuracies due to the ball shape of the measuring tip of the micrometer[45]. The shortest linear distance between the two contour lines was measured at each point to determine the discrepancy between the contour of the castings and the contour of the master. The discrepancy measurements were used to make a

chart (Fig. 3) so the accuracy of fit of the casting to the master model could be visualized.

A similar analysis was made for the castings made with investic and multivest (Figs. 4 and 5).

The casting which most closely approximated the master cast was ground smooth and polished with a laboratory lathe. During the finishing when the casting became too warm to be held, it was cooled in water. It was then measured a second time.

Results

The amount and location of the discrepancy between the master cast and the aluminum castings in the area of the palate is shown in the discrepancy charts (Figs. 3, 4, and 5). The multivest castings were least accurate, having a large area of discrepancy in the .006" to .009" range. The investic and gray castings were about equal, with the two largest areas of discrepancy being in the .000" to .003" range and the .003" to .006" range. The most accurate investic casting, after being overheated by polishing became the least accurate investic casting.

The general appearance of the castings made with three different investments was considered equal.

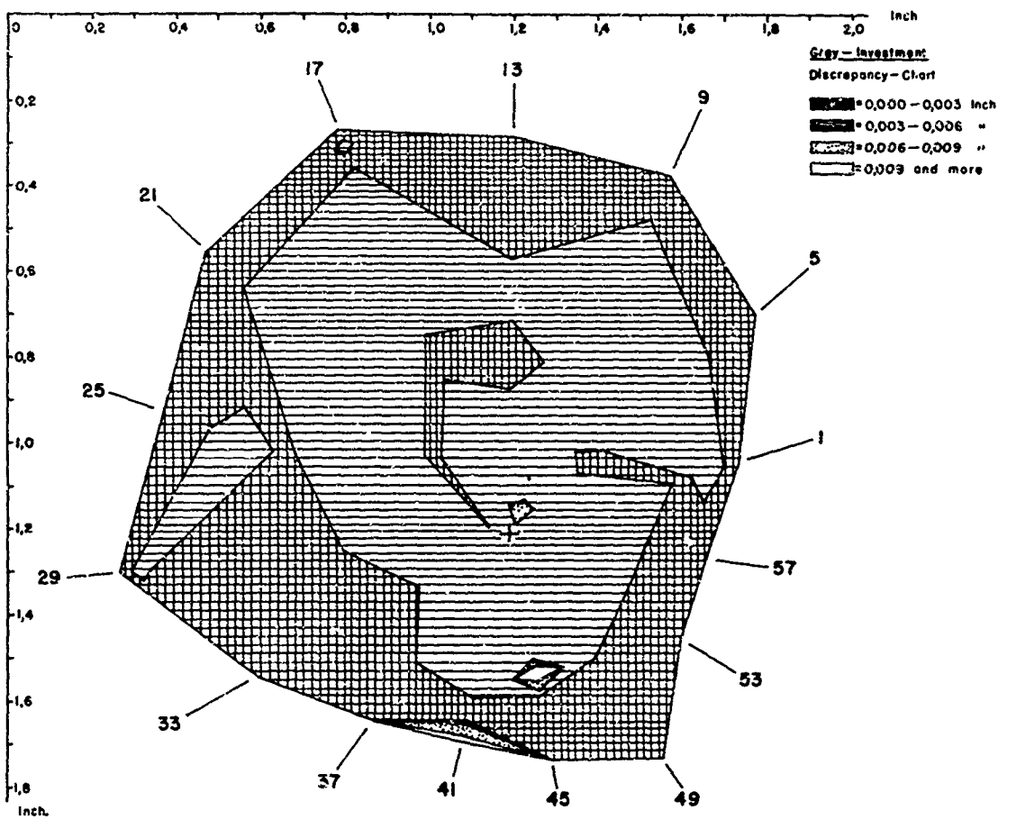

Fig. 3. Discrepancy chart for gray investment

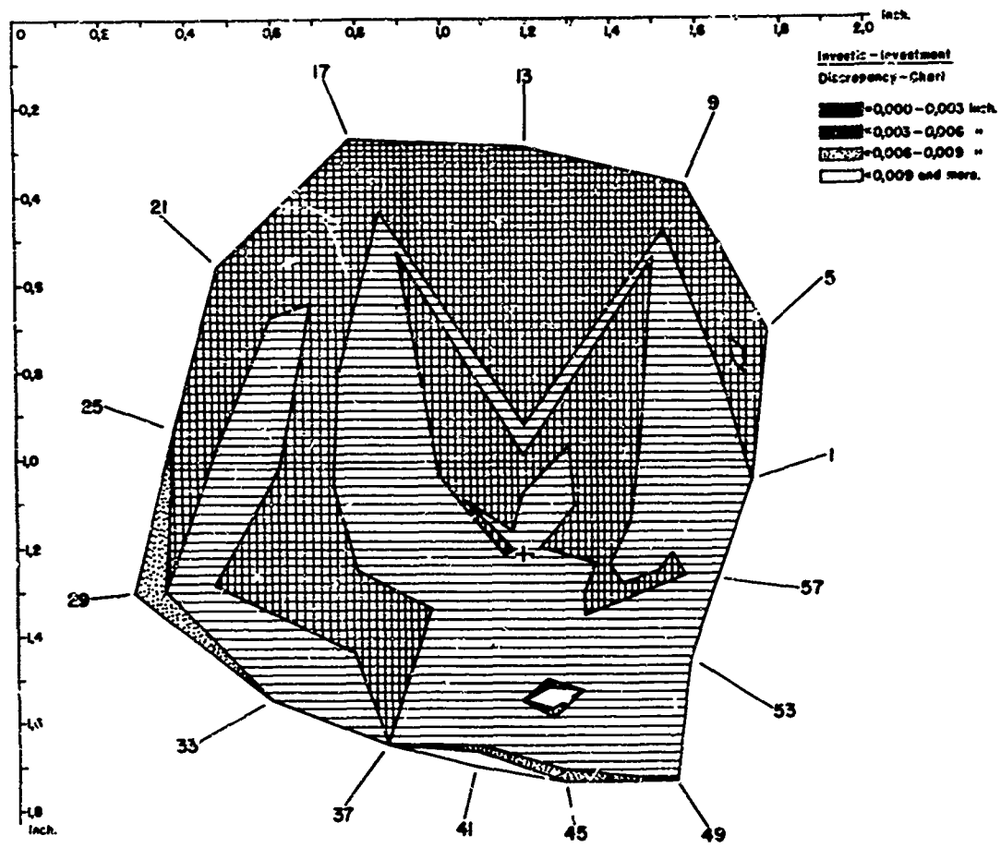

Fig. 4. Discrepancy chart for investic investment

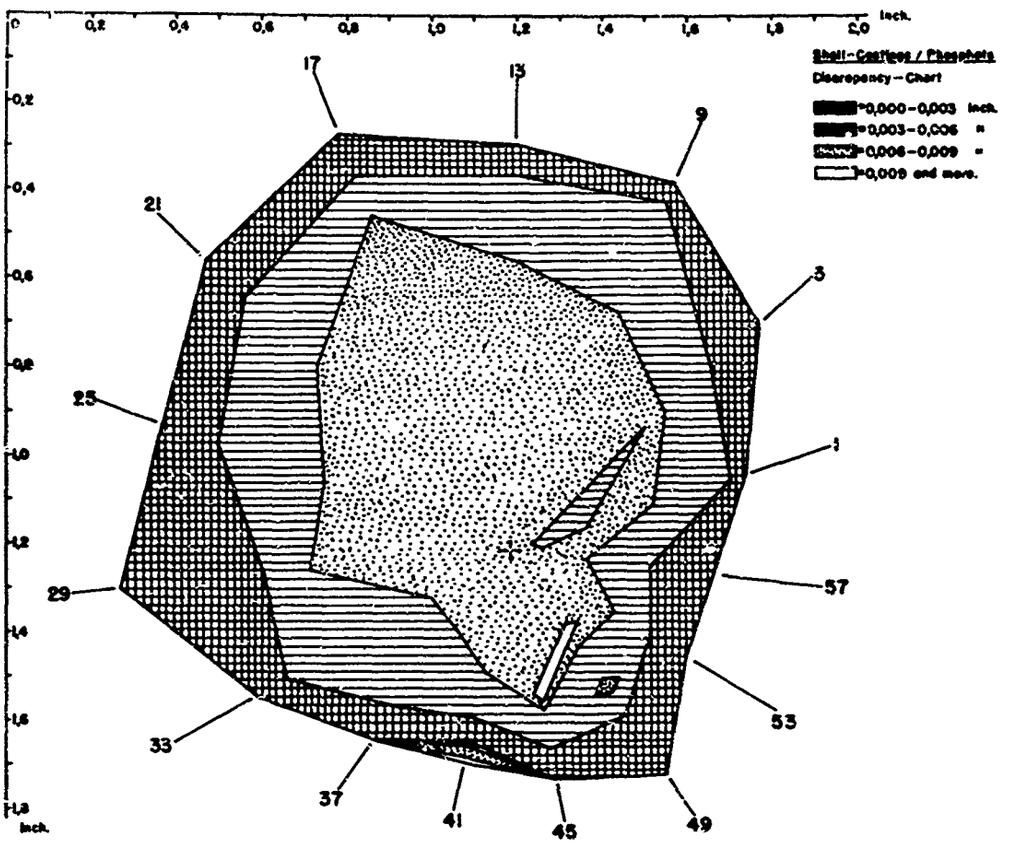

Fig. 5. Discrepancy chart for shell-phosphate

Discussion

The purpose of this portion of the study was not to determine the accuracy of fit of aluminum castings made with gray investment. Barsoum[5], et al. using the same measuring device as was used in this study, and Lundquist[3] who measured with feeler gauges, found aluminum denture bases to be more accurate than resin bases. These workers used gray investment. Satisfactory clinical dentures have been made for several years at the University by casting aluminum bases to gray investment in the same manner as was done in this study. The purpose therefore was to determine if aluminum castings made against investic molds or with the shell casting procedure would be significantly different from those made with gray investment, which have been clinically acceptable. The numerical discrepancy depends in part on the accuracy of the measuring procedure; however, since all castings were measured in an identical manner, these errors should be similar for all. Significant difference in the castings was of more interest than the discrepancy itself. Both gray and investic are hydrocal-bonded investments. However, investic is preferred when metal mold inserts are cast onto, because sulphur corrosion is reduced by an additive (an oxalate) in the investic which releases carbon dioxide during the burnout[47]. Investic was chosen because partial dentures and speech aid appliances were to be constructed by casting aluminum onto gold and ticonium clasp wire.

Multivest is a phosphate-bonded investment which can withstand the high heat required for the rapid burnout technique that is possible with the shell investment procedure. Clinical trial of cast aluminum splints for fracture fixation was planned. A quick procedure for obtaining a cast metal splint is often of particular value to those working with oral surgeons. The greater discrepancy of the multivest castings does not imply that either the multivest or the shell procedure is less accurate, but only that the two combined did not produce as accurate aluminum denture bases as those cast with the hydrocal-bonded investments using the conventional mold. Surgical splints cast to multivest casts with shell investment appeared to be very accurate.

METHODOLOGY - PART II

This study evaluated a variety of aluminum prostheses by clinical observations and patient response. The material includes the author's patients as well as those treated by others.

Clasp Retained Aluminum Prosthesis

A transitional partial denture was constructed by casting aluminum onto two 18 ga. round P.G.P.* (platinum, gold, palladium) wire clasps (Fig. 6). A speech aid appliance using a palatal lift and bulb was constructed by casting onto four wrought adams clasps of 19 ga. round ticonium** wire (Fig. 7). The aluminum speech aid was made by duplicating the master model that a graduate student had made to construct a conventional resin-wrought wire speech appliance for a juvenile patient.

Both the resin and the aluminum appliances were constructed as thin as seemed consistent with adequate strength. A wire was embedded in the resin appliance connecting the bulb to the palatal section as a safety factor should the strap break. The weight and the volume of the two appliances were compared, the patient's preference noted, and a speech evaluation was made by a speech therapist.

---

*J.M. Ney Company, Hartford, Connecticut
**Ticonium Division of CMP Industries, Inc., Albany, New York

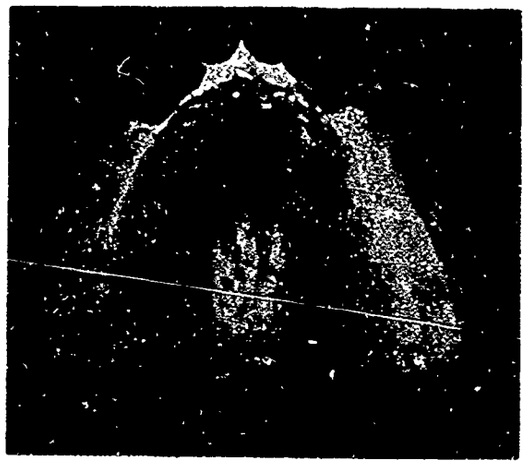

A

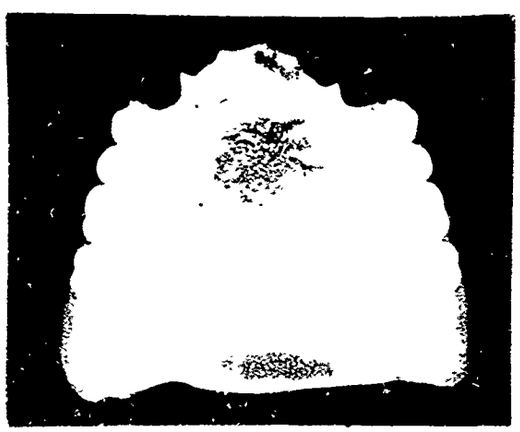

B

Fig. 6. Aluminum base partial denture with gold (P.G.P.) clasp

A

B

Fig. 7. (A) Speech appliance wax-up; (B) Speech appliance

Results

The junction between the clasp wires and the aluminum appears to be acceptable. The partial denture has given good service for four months, but is now discolored. The patient used a "soak-clean" commercial preparation made for resin dentures which has prevented evaluation of galvanic corrosion resulting from the gold-aluminum combination, which was the primary purpose of the experimental partial.

The aluminum speech aid weighed 13.5 grams, the resin appliance weighed 12.5 grams. The resin appliance averaged four millimeters thicker than the aluminum in the strap region, and it was estimated the total volume of the resin appliance was four to five thousand cubic millimeters more than the aluminum appliance.

The speech pathologist rated the two appliances equal. The patient preferred the resin speech aid, so the aluminum speech aid has not been used.

Discussion

These two preliminary appliances indicate that clasp retained aluminum transitional appliances may have some advantages and warrant further study. The thinner palatal coverage that is possible with the aluminum may benefit articulation for some patients. Encroachment on the tongue activity by a thick strap during swallowing may cause dislodgment of a speech appliance and trigger gagging or unduly stress the abutment teeth. The patient in this study had previous experience with a resin speech aid to which he had accommodated,

which may have influenced his preferance as well as the speech analysis.

Surgical Splints

Cast aluminum splints were constructed for two patients that were to have mandibular prognathism corrected by surgical resection. For one patient the splints were made by using the conventional investing and casting procedures with gray investment, and for the other the rapid jelling shell investment procedure[45] was used. The design of the splints was similar to those customarily used for other metal splints with two exceptions: (1) the junction of the retention loops on the bar was waxed heavy for additional strength, and (2) saddles with occlusal tables for edentulous areas were included in the casting (Figs. 8 and 9).

The splints fit accurately and were ligated to the teeth with stainless steel wire the day before the surgery was scheduled. Surgery was cancelled for one patient and the splints removed the next day. The second patient wore the splints with rubber elastic intermaxillary fixation for 24 hours following surgery. The elastics were replaced with stainless steel wire for six weeks, the splints were removed on the eighth week following placement.

Results

The splints served satisfactorily and the healing period was uneventful. The splints remained bright and shiny throughout the

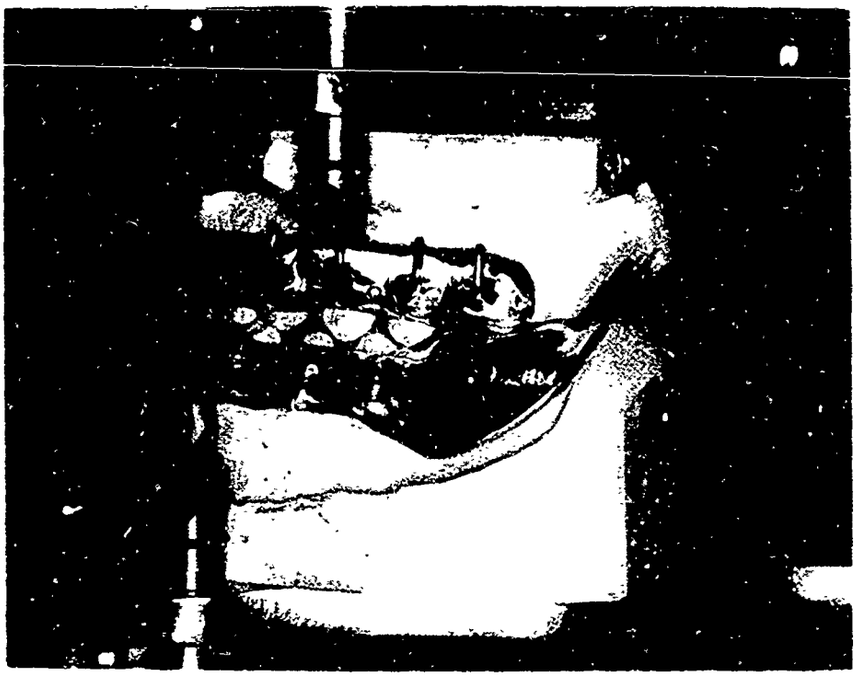

Fig. 8. Aluminum splints showing cast saddles. A shell casting.

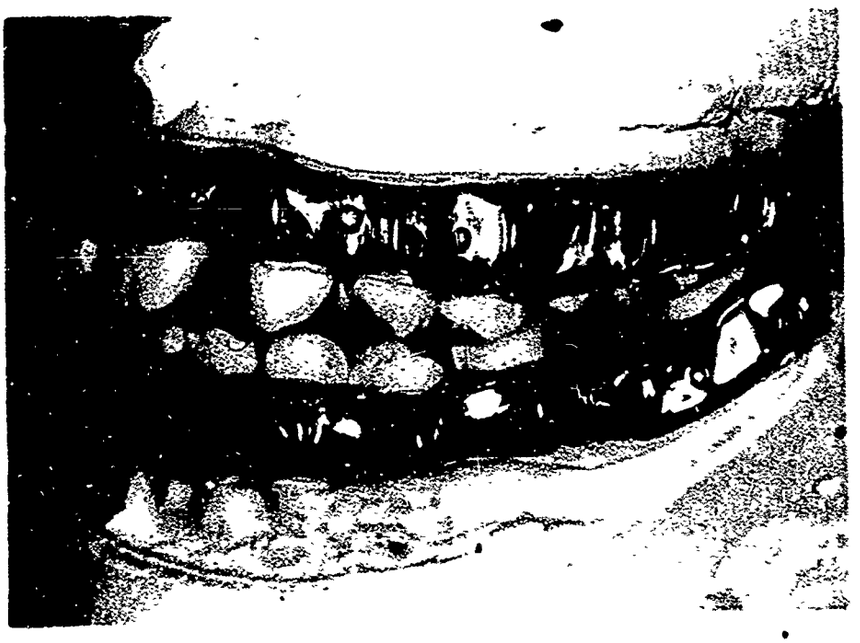

Fig. 9. Aluminum splints cast in investic molds

fixation period (Fig. 10). No evidence of electrolytic lesions or galvanic pain was encountered.

Discussion

Cast metal splints often provide the best method of fixation for patients who have fractures of the facial skeleton or for patients having mandibular deformities corrected by surgery. Most metal splints are radiopaque which requires removal of the splints for complete radiographic examination[48]; however, the aluminum splints are radiolucent (Fig. 11). This is of particular value in observing the intercusping of the teeth on the radiograph. The alloy used for the largest splints cost about ten cents and most laboratories should be able to construct aluminum splints with little additional equipment. Aluminum splints have adequate strength, yet they are easily machined and polished. By including saddles and occlusal tables for edentulous areas in the casting, the need for a second procedure to process on resin saddles is eliminated.

Aluminum Posterior Occlusal Surfaces

A middle aged, single, professional woman that had experienced repeated fractures of a maxillary denture presented with a history of low tissue tolerance and bruxism. The available denture space was very limited, so the resin posterior teeth of her denture had been ground very thin to butt against the ridge, and the denture fractures

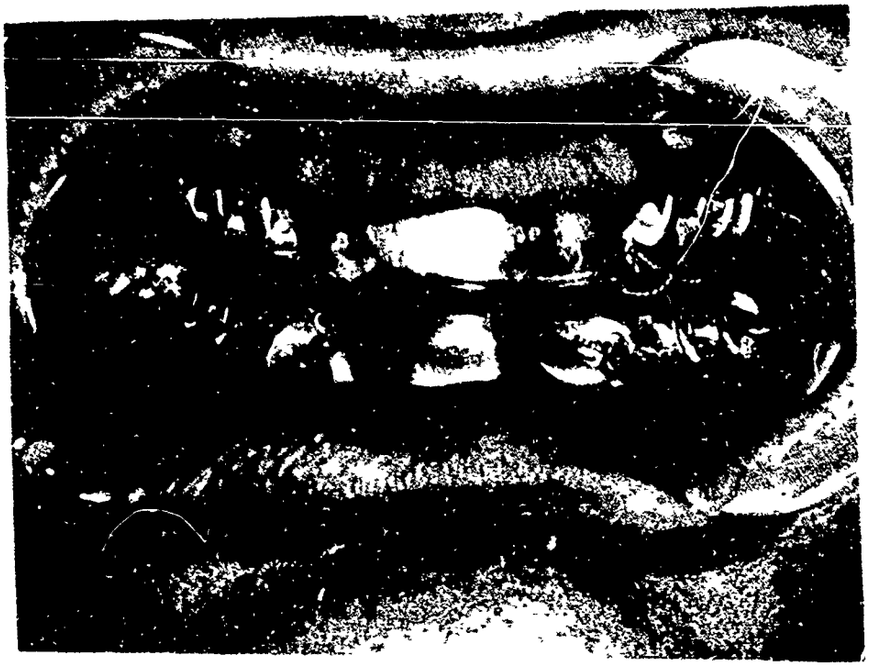

Fig. 10. Appearance of splints after six weeks' use

Fig. 11. Radiograph with splints in place

occurred just lingual to these teeth. A previous attempt to increase the interarch space had resulted in discomfort and resorption under the opposing mandibular partial denture. The limited space for the denture is shown (Fig. 12). An aluminum denture base was cast with the posterior occlusal surface included in the casting (Fig. 13).

Results

The patient has gold crowns on the lower premolars, which caused a galvanic shock when contact was made with the aluminum. This contact only occurred in extreme movements as the aluminum occlusal surfaces did not contact the gold crowns in the normal functional range. The aluminum was ground slightly to prevent this contact, and the galvanic shock subsided. The denture has given satisfactory service for five months.

Discussion

Limited interarch space may present problems in tooth placement and in the extension of the denture bases to cover the maxillary tuberosities and the retromolar pads. When this condition cannot be corrected by surgery, the denture may be underextended or made too thin for adequate strength. Aluminum may aid in solving this problem because its low cost and light weight allows casting bulky occlusal sections, and it resists fracture in thin sections. Evaluation of the wear of the aluminum occlusion cannot be made in a limited time.

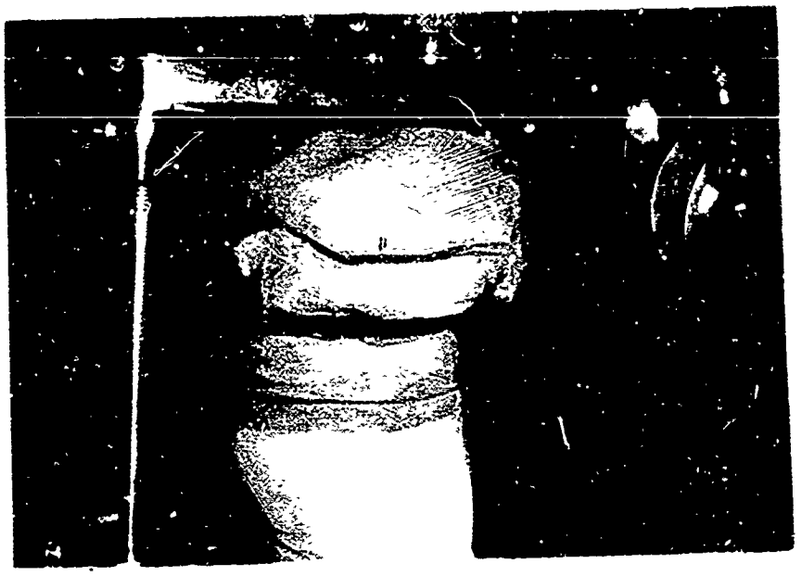

Fig. 12. Mounted cast showing limited denture space. Lower cast is counter made from generated path.

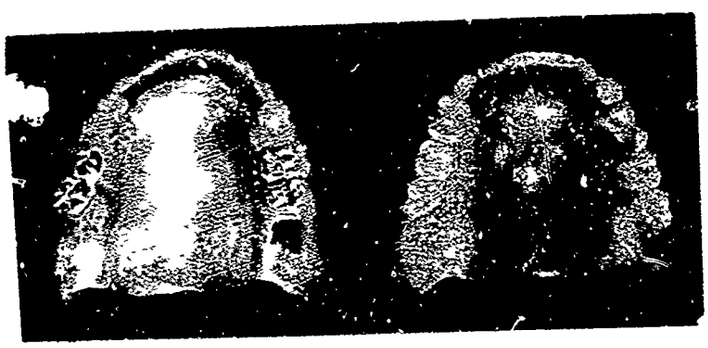

Fig. 13. Left - Aluminum base denture with aluminum occlusals
Right - Old denture which frac ed lingual to the molars

Other Clinical Observations

(1) Tissue conditioning material* can be used in aluminum dentures, but it is necessary to roughen the aluminum to retain the conditioning material.

(2) Mercury or freshly mixed amalgam will chemically attack aluminum prostheses. It is suggested that aluminum prostheses should not be used for one hour after placement of an amalgam restoration.

(3) Patients are very much aware of the increased thermal conductivity of the aluminum dentures as compared to resin dentures.

(4) The cast bases facilitate the recording of maxillomandibular relations.

(5) The correct location for the anterior palatal finishing line can best be determined if a preliminary trial set-up of the maxillary anterior teeth is done prior to the wax-up for the casting.

(6) Prostheses that are cleaned only with soap and water maintained their finish better than those cleaned with commercial denture cleaners.

(7) Patients with aluminum prostheses are not aware of a metallic taste from the aluminum.

---

*Hydrocast-Kay-See Dental Laboratories

SUMMARY

Part I

A limited laboratory study was made to compare the general appearance and accuracy of aluminum castings made from a standard pattern using three different investments. Three castings were made with each investment.

Gray investment was used because recent studies[3-5] and clinical experience have shown satisfactory results can be obtained with this material.

Another hydrocal-bonded investment (investic) was used because this material may be desirable when aluminum is cast onto metal mold inserts.

A phosphate-bonded investment (multivest) was used following the rapid jelling shell investment procedure because of the speed with which a casting can be obtained.

Good castings of similar appearance were obtained with each investing material. The two hydrocal-bonded investments produced castings of similar accuracy when measured with a surface meter.

Repeated measurements of one casting demonstrated that the fit of an aluminum denture base can be destroyed by careless polishing.

Part II

An aluminum alloy was used to construct prosthetic appliances for clinical patients. These included a partial denture and a speech aid appliance which had wrought wire clasps, surgical splints, and a complete denture with an aluminum occlusal surface. The initial evaluation of these appliances has been discussed and the other clinical observations were reported.

CONCLUSIONS

(1) No significant difference was found in the accuracy of aluminum alloy D-214 castings made with investic or gray investment.

(2) Clinically acceptable aluminum castings can be made using hydrocal-bonded investments with the conventional investing procedure or with the rapid jelling shell investment procedure using a phosphate bonded investment.

(3) Alloy D-214 may be cast to P.G.P. gold or Ticonium wrought wire mold inserts to construct clinically acceptable prostheses.

REFERENCES

1. Trapozzano, V. R. Occlusal records. J. Prosth. Dent., 5:325-32, May 1955.

2. Boucher, C. O. ed. Swenson's complete dentures. 5th ed., St. Louis, Mosby, 1964. 798 p. (p. 704).

3. Lundquist, D. O. An aluminum alloy as a denture base material. J. Prosth. Dent., 13:102-10, Jan.-Feb. 1963.

4. Martins, E. A., Asgar, K., and Gibbons, P. Determinacas das Forcas Retentivas de Bases de Dentaduras de Aluminio e Resinas Acrilicas. Revista de Faculdade de Odontologia de Porto Allegre, Brazil, 5:71-86, 1963.

5. Barsoum, W. M., Eder, J., and Asgar, K. Evaluating the accuracy of fit of aluminum cast denture bases and acrylic resin bases using a surface meter. Unpublished paper submitted for publication to Am. Dent. A. J.

6. Edwards, J. D., Frary, F. C., and Jeffries, Zay. Aluminum and its production. New York, McGraw-Hill, 1930, p. 358.

7. Furnas, I. L. Casting methods for metal base dentures. p. 527-82. (In Anthony, L. P. American textbook of prosthetic dentistry, 7th ed., Philadelphia, Lea and Febiger, 1942. 926 p.)

8. Johnson, W. W. The history of dentistry. J. Prosth. Dent., 9:841-48, Sept.-Oct. 1959.

9. Vanden Berg, R. V. Commercial anodic surface treatments for aluminum and its alloys. Reprint from Plating Magazine, Feb. 1956.

10. Prothero, J. H. Prosthetic Dentistry. Ed. 2, Chicago, Medico-Dental Publishing, 1916. 1200 p. (p. 120; p. 190-220)

12. Sitherwood, G. D. Evolution of cast-swaged aluminum plates. Illinois State Dental Society Transactions, 156-58, 1926.

13. Taggart, W. H. A new and accurate method of making gold inlays. Dent. Cosmos, 49:1120, 1907.

14. Campbell, D. D. Cowbell method of casting aluminum plates. Dental Brief, 13:343-48, June, 1908.

15. Casting metal dentures. Editorial, the Dentist Magazine, 3:444, June, 1908.

16. Baughman, G. P. A positive and direct method of casting and adapting aluminum plates to fit. Dent. Digest, 24:147-51, Mar. 1918.

17. Klaffenback, A. Cast aluminum denture bases. Nat. Dent. A. J., 8:735-38, Sept. 1921.

18. Campbell, D. D. Full denture prosthesis. St. Louis, Mosby, 1924. 390 p. Chapt. XII.

19. Campbell, D. D. The cast aluminum base denture. Am. Dent. A. J., 23:1264-70, July, 1936.

20. Tregarthen, G. G. T. The anodic treatment of aluminum and its alloys for use in the mouth. Brit. Dent. J., 86:227-28, May 6, 1949.

21. Ryan, Joseph. The use of duralumin-type alloys in constructing skeleton partial dentures. Journal of the Dental Association of South Africa, 15:245-68, Aug. 15, 1960.

22. Pryor, W. J. Inhibitory action on bacterial growth of certain dentures. Am. Dent. A. J., 11:195, Mar. 1924.

23. Lain, E. S. Electrogalvanic lesions of the oral cavity produced by metallic dentures. Am. Med. A. J., 100:717-20, March 11, 1963.

24. Lain, E. S., and Caughron, G. S. Electrogalvanic phenomena of oral cavity caused by dissimilar metallic restorations. Am. Dent. A. J., 23:1641-52, Sept. 1936.

25. Sizeland-Coe, J. W. Superpurity aluminum in dental prostheses. Brit. Dent. J., 91:263-68, Nov. 20, 1951.

26. Müller, Z. E. Atlas und Lehrbuch Der Modernen Zahn Ärztlichen Metalltechnik. Leipzig, Verlag Von Carl Ziegenhirt, 1906, p. 247. Chapter 6.

27. Baghel, David. A brief outline of the procedure adopted in demonstrating the production of cast-swaged aluminum full denture base plates. Austral. J. Dent., 33:124-26, April 1, 1929.

28. Campbell, D. D. The cast swaged aluminum denture. Am. Dent. A. J., 22:2082-89, Dec. 1935.

29. Neill, D. J. Use of an aluminum casting alloy for constructing denture bases. Dent. Pract. and Dent. Rec., 8:382-86, Aug. 1958.

30. Clark, D. S., and Varney, W. R. Physical metallurgy for engineers. Princeton, N. J. D. Van Nostrand Co., 1962. 629 p. (p. 419)

31. Aluminum Company of America Analysis Report from Shipping Manifest. Mar. 13, 1959.

32. An aluminum alloy for denture bases. Aluminum Co. of America, Sept. 3, 1936. 5 p. mimeograph.

33. Lucia, V. O. Modern gnathological concepts. St. Louis, Mosby, 1961. 610 p.

34. Graner, E. R. Practical procedures in oral rehabilitation. Philadelphia, Lippincott, 1962, 306 p.

35. Holmes, H. N. General chemistry. Ed. 3, New York, Macmillian, 1937, p. 700, Chapter XLVI.

36. Alcoa aluminum and its alloys. Pittsburg, Aluminum Co. of America, 1950. 178 p.

37. Peyton, F. A., et al. Restorative dental materials. St. Louis, Mosby, 1964. p. 543.

38. Peyton, F. A. Cast chromium-cobalt alloys. Dental Clinics of North America, Nov. 1958. p. 750-71.

39. Aluminum casting alloys. Aluminum Co. of America, Pittsburg, Pennsylvania, 1940.

40. Vanden Berg, R. V. Anodized coatings for aluminum. Reprint from Material and Methods, July, 1956.

41. Vanden Berg, R. V. Techniques for coloring anodized aluminum. Reprint from Products Finishing, Feb.-Mar. 1960.

42. Tregarthen, G. G. T. The anodic treatment of aluminum and its alloys for use in the mouth. Brit. Dent. J., 76:300-1, June 2, 1944.

43. Goodsell, J. O. The treatment of edentulous jaw fractures. p. 532. (In Nichols, I. G., Prosthetic dentistry, St. Louis, Mosby, 1932. 687 p.)

44. Nyquist, Göte. Denture sore mouth. Acta Odont. Scandinav., 10 (supp. 9) 11-154, 1952.

45. Dootz, E. R., Craig, R. G., and Peyton, F. A. Simplification of chrome-cobalt partial denture casting procedure. Unpublished paper submitted for publication to J. Prosth. Dent.

46. Anthony, D. H., and Peyton, F. A. Evaluating dimensional accurary of denture bases with a modified comparator. J. Prosth. Dent., 9:683-92, July-Aug. 1959.

47. Asgar, Kamal, and Peyton, F. A. Casting dental alloys to embedded wires. J. Prosth. Dent., 15:312-21, Mar.-Apr. 1965.

48. Dental Laboratory Technician's Manual, Department of the Air Force. 1 March, 1959. 577 p. (p. 515)