AEDC-TR-66-26

MAY 30 1966

JUN 11 1968

INSULATIVE PERFORMANCE OF SELECTED ABLATIVE MATERIALS IN A LOW ENTHALPY HYPERSONIC AIRSTREAM

J. B. Carman, Jr.

ARO, Inc.

May 1966

Distribution of this document is unlimited.

PROPERTY OF U. S. AIR FORCE
AEDC LIBRARY
AF 40(600)1200

VON KÁRMÁN GAS DYNAMICS FACILITY

ARNOLD ENGINEERING DEVELOPMENT CENTER

AIR FORCE SYSTEMS COMMAND

ARNOLD AIR FORCE STATION, TENNESSEE

NOTICES

When U. S. Government drawings specifications, or other data are used for any purpose other than a definitely related Government procurement operation, the Government thereby incurs no responsibility nor any obligation whatsoever, and the fact that the Government may have formulated, furnished, or in any way supplied the said drawings, specifications, or other data, is not to be regarded by implication or otherwise, or in any manner licensing the holder or any other person or corporation, or conveying any rights or permission to manufacture, use, or sell any patented invention that may in any way be related thereto.

Qualified users may obtain copies of this report from the Defense Documentation Center.

References to named commercial products in this report are not to be considered in any sense as an endorsement of the product by the United States Air Force or the Government.

INSULATIVE PERFORMANCE OF SELECTED ABLATIVE MATERIALS IN A LOW ENTHALPY HYPERSONIC AIRSTREAM

J. B. Carman, Jr.
ARO, Inc.

Distribution of this document is unlimited.

AF - AEDC
Arnold AFS Tenn

FOREWORD

The work herein was conducted for the General Electric Company at the request of the Ballistic Systems Division (BSD), Air Force Systems Command (AFSC), under Program Element 11016014, System 133B.

The results of the tests were obtained by ARO, Inc. (a subsidiary of Sverdrup and Parcel, Inc.), contract operator of the Arnold Engineering Development Center (AEDC), AFSC, Arnold Air Force Station, Tennessee, under Contract AF40(600)-1200. The tests were conducted on November 22, 1965 under ARO Project No. VC0647, and the manuscript was submitted for publication on January 11, 1966.

This technical report has been reviewed and is approved.

John W. Hitchcock
Major, USAF
AF Representative, VKF
DCS/Test

Jean A. Jack
Colonel, USAF
DCS/Test

ABSTRACT

Tests were conducted to investigate the insulative performance of selected ablative materials when exposed to a relatively low enthalpy hypersonic airstream. Samples of cork, an elastomeric shield material, phenolic glass containing a buton resin, and phenolic glass, mounted on the surface of a sharp flat plate, were injected into a Mach 10 airstream at 15- and 25-deg angles of attack. The model was tested at a high free-stream Reynolds number, 2.2×10^6 per foot, to produce turbulent flow over the samples. The test results, which consisted of back surface temperature histories on the 0.15-in.-thick samples, showed that cork provided the greatest heat protection.

CONTENTS

		Page
	ABSTRACT	iii
	NOMENCLATURE	vi
I.	INTRODUCTION	1
II.	APPARATUS	
	2.1 Wind Tunnel	1
	2.2 Model	1
	2.3 Instrumentation	2
III.	PROCEDURE	
	3.1 Test Conditions	2
	3.2 Data Reduction	3
IV.	RESULTS AND DISCUSSION	3
	REFERENCES	4

ILLUSTRATIONS

Figure		
1.	Tunnel C	5
2.	Installation Photograph	6
3.	Model Detail	
	a. Flat Plate	7
	b. Ablation Sample Insert	8
4.	Typical Schlieren Photographs	
	a. α = 15 deg	9
	b. α = 25 deg	9
5.	Flat Plate Centerline Flow Characteristics	
	a. α = 15 deg	10
	b. α = 25 deg	11
6.	Material Insulative Performance	
	a. α = 15 deg	12
	b. α = 25 deg	13

NOMENCLATURE

b	Model skin thickness, ft
c	Model skin specific heat, Btu/lb-°R
h	Local heat-transfer coefficient, Btu/ft^2-sec-°R
L	Model length, in.
M_L	Theoretical local Mach number at edge of model boundary layer
M_∞	Wind tunnel free-stream Mach number
p	Model wall static pressure, psi
p_∞	Wind tunnel free-stream static pressure, psi
$\dot{q}$	Local heat-transfer rate, Btu/ft^2-sec
T_{aw}	Adiabatic wall temperature, °R
ΔT_{BF}	Material sample backface temperature change, °R
T_w	Model wall temperature, °R
T_∞	Wind tunnel free-stream static temperature, °R
t	Time of model exposure to tunnel free stream, sec
w	Model skin specific weight, lb/ft^3
x	Distance along model from leading edge in flow direction, in.
α	Angle of attack of model test surface (positive angle = test surface windward), deg

SECTION I
INTRODUCTION

Pressure and heat-transfer measurements on a sharp flat plate and backface temperature measurements on selected ablation samples were made at a nominal free-stream Mach number of 10 and at angles of attack of 15 and 25 deg. The test was performed in the 50-in. hypersonic tunnel (Gas Dynamic Wind Tunnel, Hypersonic (C)) at a free-stream unit Reynolds number of 2.2×10^6 per foot.

The objective of this test was to investigate the insulative capabilities of four ablation materials in a relatively low enthalpy hypersonic airstream. No ablation data for the particular materials were available in this flow regime. As material response to heating at low enthalpy might differ from the response at high enthalpy conditions, these data were necessary to complete an effective study of material performance.

SECTION II
APPARATUS

2.1 WIND TUNNEL

Tunnel C is an axisymmetric, continuous flow, variable density wind tunnel with a 50-in.-diam test section. The tunnel operates at a nominal Mach number of 10 at stagnation pressures from 200 to 1800 psia. Stagnation temperatures up to 1900°R are utilized to prevent liquefaction of the air in the test section. A sketch of Tunnel C and associated equipment is shown in Fig. 1.

2.2 MODEL

The investigation was conducted on the stainless steel flat plate shown in Figs. 2 and 3. The model was provided with interchangeable heat-transfer and pressure panels for flat plate surface flow calibration. The panels were designed to fair smoothly with the model surface except near the nose of the model where a 0.20-in.-wide and 0.15-in.-deep gap was located to allow for thermal expansion (Fig. 2). Surface instrumentation was arranged as shown in Fig. 3a.

Material samples were designed as inserts to replace one of the calibration panels. As shown in Fig. 3b, the 0.150-in.-thick sample was bonded to a 0.005-in.-thick stainless steel panel which was, in turn, bonded to a piece of Textolite®. Sample backface temperatures were monitored by thermocouples attached to the underside of the stainless steel panel. Ablation materials tested included samples of cork, an elastomeric shield material (ESM), phenolic glass, and phenolic glass containing a buton resin (Buton A500).

2.3 INSTRUMENTATION

Each channel of the Tunnel C pressure measuring system consists of a 1- and a 15-psid frequency modulated transducer. These are switched in and out of the system automatically to allow measuring to the best available precision.

The Chromel-Alumel® thermocouple outputs were recorded on magnetic tape at a rate of 20 times per second. The reference junction of each thermocouple was maintained at 132°F.

Model flow field photographs were obtained with a single-pass, collimated beam schlieren system. Typical photographs are shown in Fig. 4.

SECTION III
PROCEDURE

3.1 TEST CONDITIONS

Transient heat-transfer data were obtained by injecting the model into the airstream for a specified period of time while model thermocouple histories were recorded. The model was then retracted into the installation chamber below the tunnel and cooled with air until the model reached a uniform temperature. This procedure was repeated at the test conditions summarized below:

Nominal Free-Stream Conditions

Total pressure, p_O = 1800 psia

Total temperature, T_O = 1896°R

Mach number, M_∞ = 10.18

Unit Reynolds number, $Re_\infty = 2.2 \times 10^6$ per foot

Static pressure, p_∞ = 0.037 psia

Static temperature, T_∞ = 91.7°R

t, sec	α, deg	Ablation Sample Material	Data
5	15, 25	0.05-in.-thick stainless steel	Heat transfer
30	15, 25	Cork, ESM, Phenolic Glass, and Buton A500	Backface temperature
60	15, 25	Cork, ESM, Phenolic Glass, and Buton A500	Backface temperature
120	15	Cork, ESM, Phenolic Glass, and Buton A500	Backface temperature
---	15, 25		Pressure

3.2 DATA REDUCTION

Free-stream conditions were computed assuming an isentropic expansion of a variable specific heat gas following the method of Ref. 1. Values of aerodynamic heating rate were calculated using temperature-time data in the relation

$$\dot{q} = wbc \frac{dT_w}{dt}$$

Heat-transfer coefficients were calculated using the equation

$$h = \dot{q}/(T_{aw} - T_w)$$

where

$$T_{aw} = T_\infty \left[1 + 0.9 \left(0.2 M_\infty^2\right)\right]$$

SECTION IV
RESULTS AND DISCUSSION

In order to obtain the desired heat-flux levels, it was necessary to provide turbulent flow in the area of the ablation samples. As shown in Fig. 5 by the sudden increase in h, transition started at approximately 30 percent of the model length for both angles of attack, and the flow was fully turbulent over the ablation material. Measured heat-transfer coefficient values for laminar and turbulent flow closely agreed with those predicted by the methods of Ref. 2. Surface pressure measurements, however, differed somewhat from those given by wedge theory, because of disturbances in the flow caused by a shock emanating from the thermal expansion gap (see Fig. 4). The sudden drop in pressure aft of the

$x/L = 0.55$ in Fig. 5b may be attributed to leading-edge corner effects as illustrated by the estimated location of the intersection of the Mach lines with the model centerline.

Insulative performance of the materials is illustrated in Fig. 6. Cork had the best insulative properties of the materials tested, whereas ESM and Buton A500 showed similar but somewhat less insulative capabilities. Phenolic glass offered the least insulation capacity.

REFERENCES

1. Randall, R. E. "Thermodynamic Properties of Air: Tables and Graphs Derived from the Beattie-Bridgeman Equation of State Assuming Variable Specific Heats." AEDC-TR-57-8 (AD 135331), August 1957.

2. Harms, R. J., Schmidt, C. M., Hanawalt, A. J., and Schmitt, D. A. "A Manual for Determining Aerodynamic Heating of High-Speed Aircraft." Bell Aircraft Corporation, Report No. 7006-3352-001 (AD 229434), June 1959.

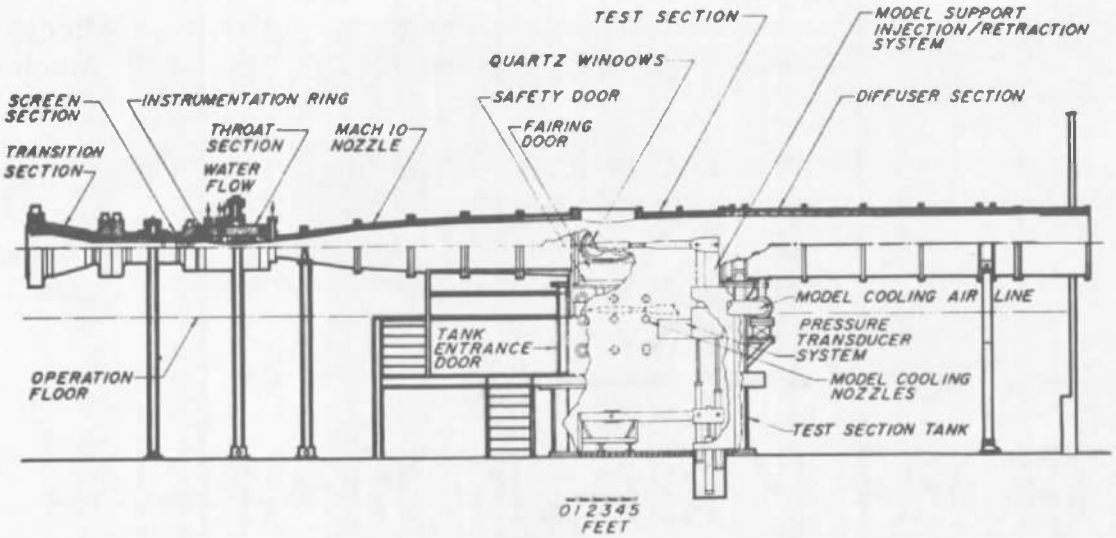

Tunnel Assembly

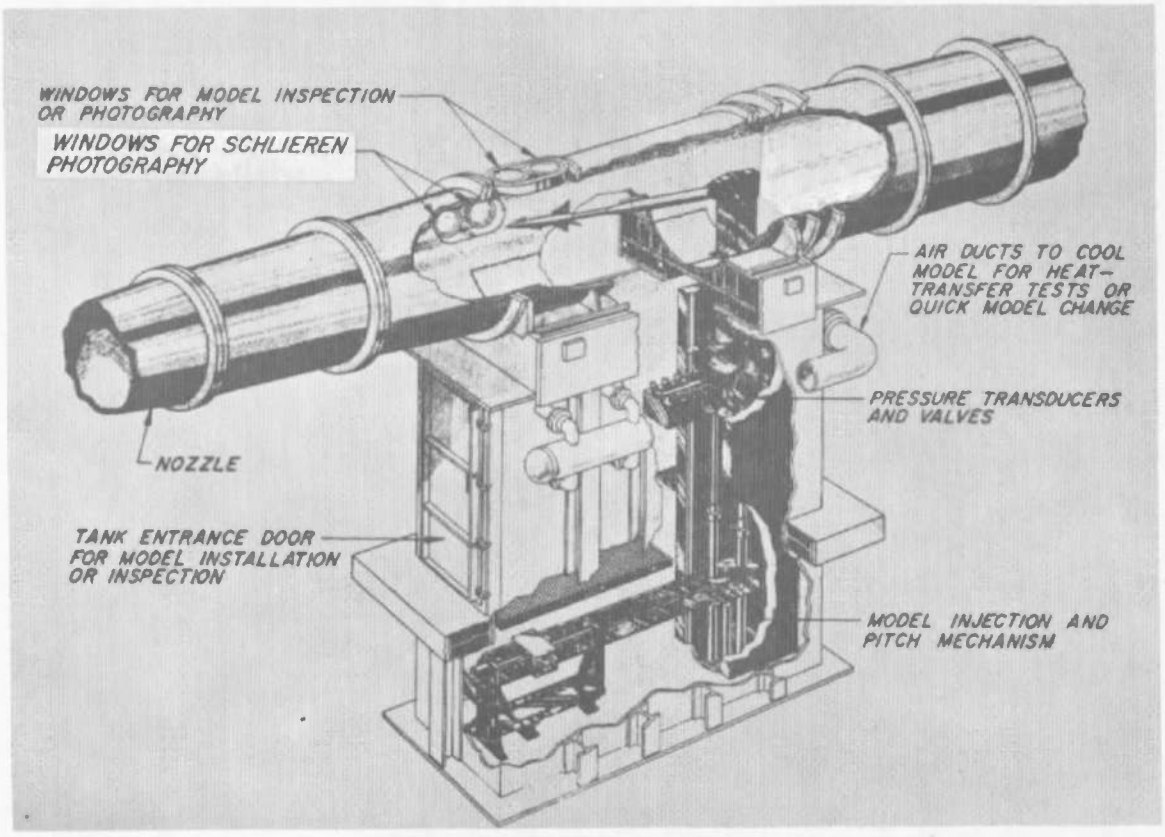

Test Section

Fig. 1 Tunnel C

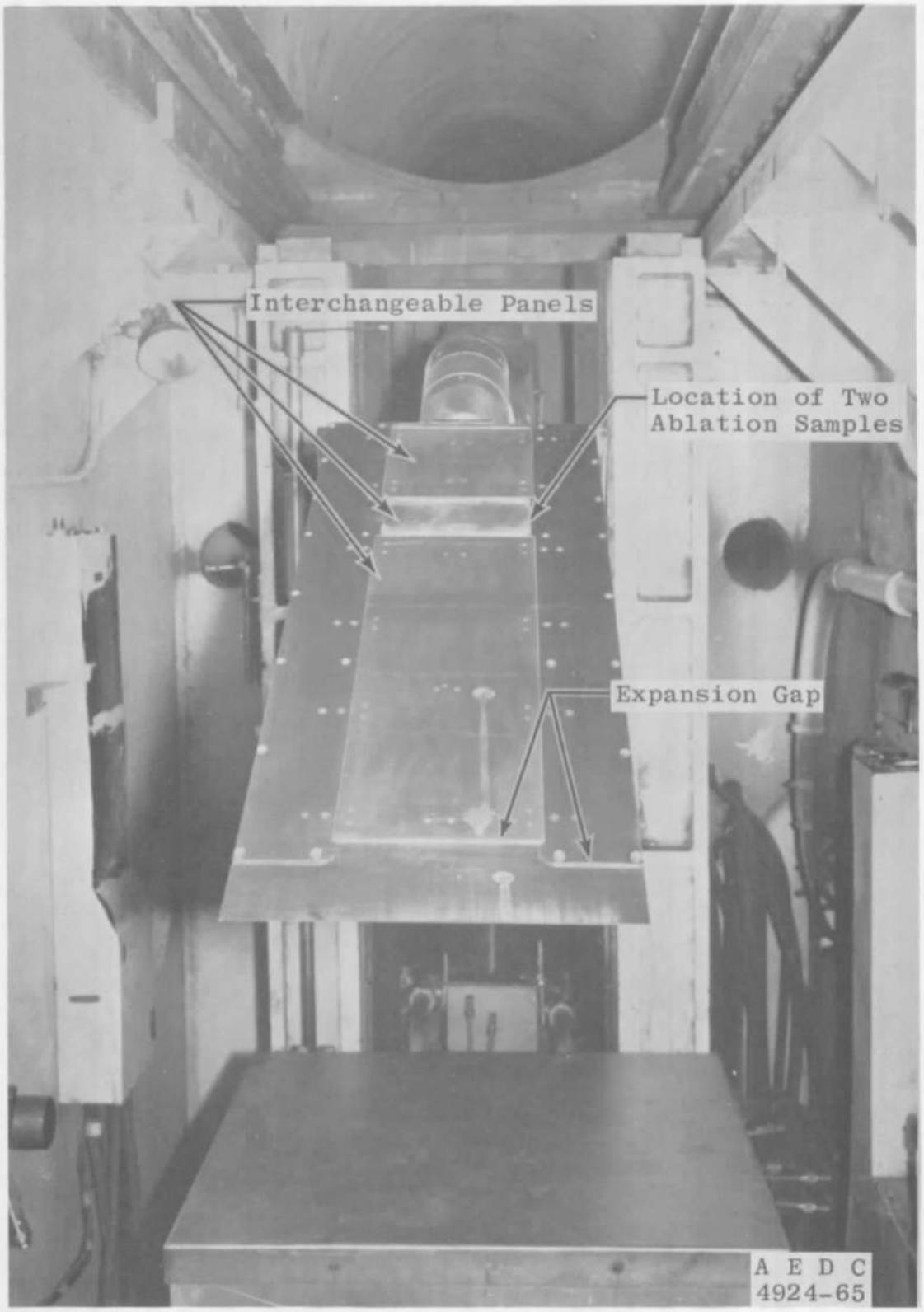

Fig. 2 Installation Photograph

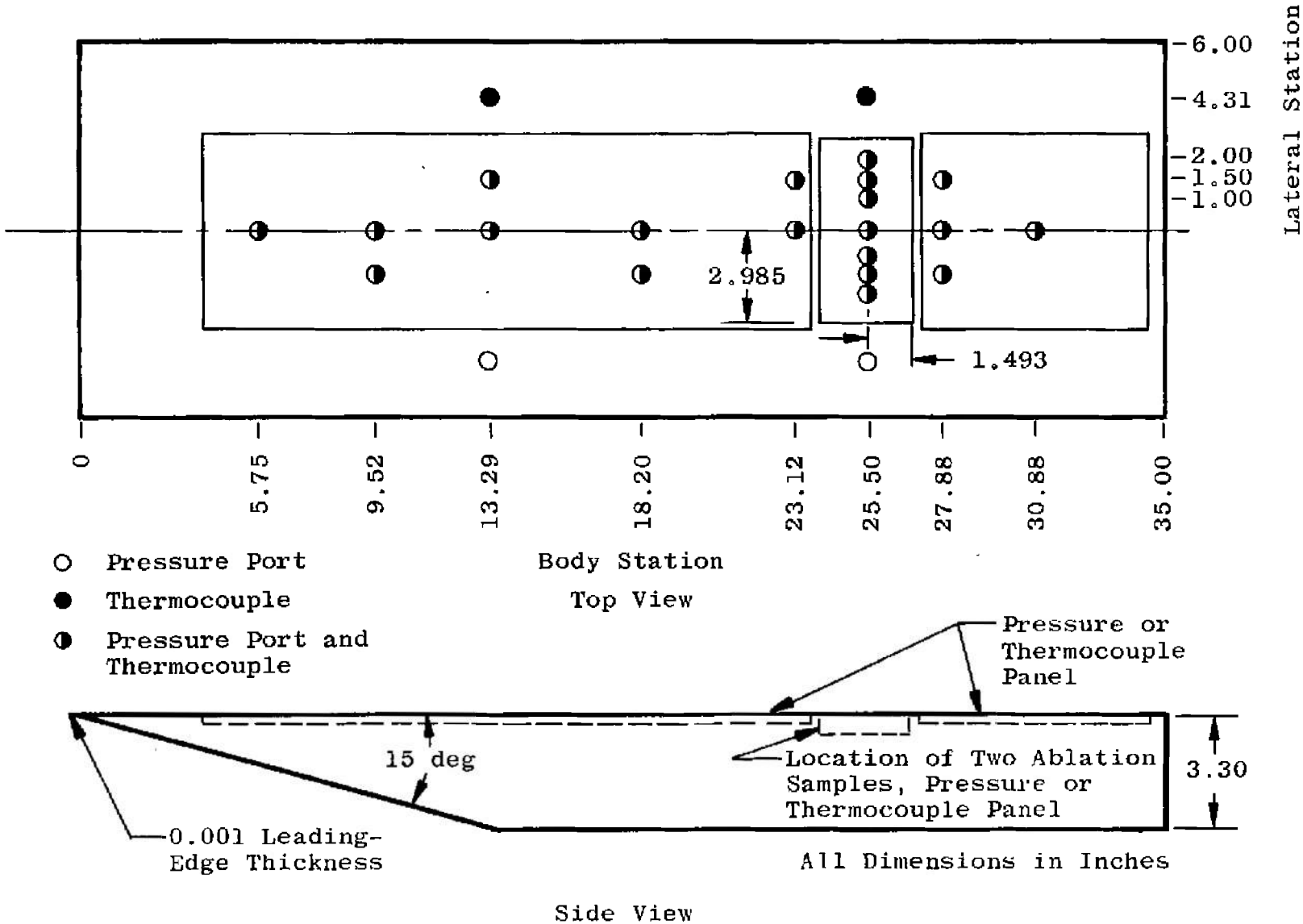

a. Flat Plate

Fig. 3 Model Detail

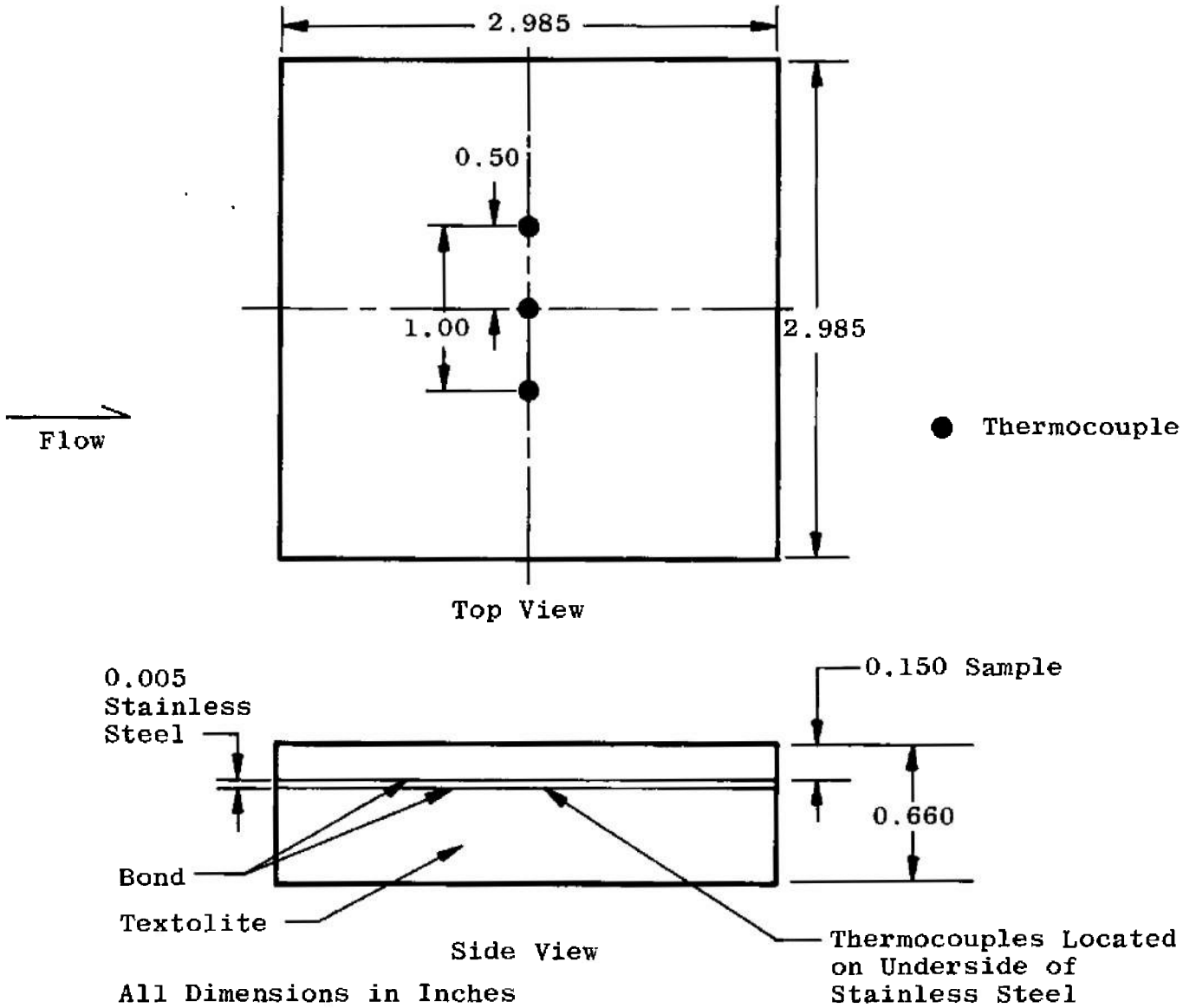

b. Ablation Sample Insert

Fig. 3 Concluded

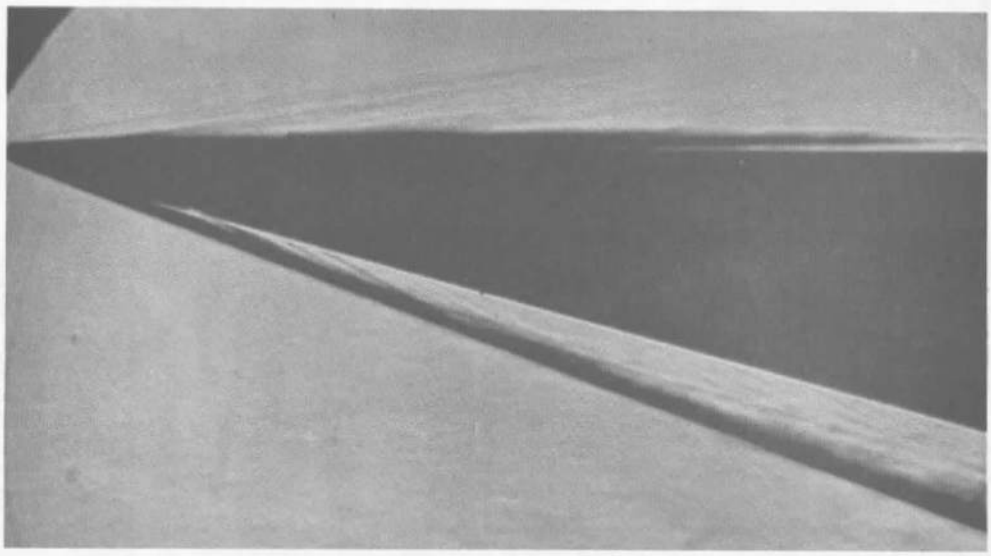

0 0.1 0.2 0.3 0.4

Nondimensional Distance from Leading Edge, x/L

a. α = 15 deg

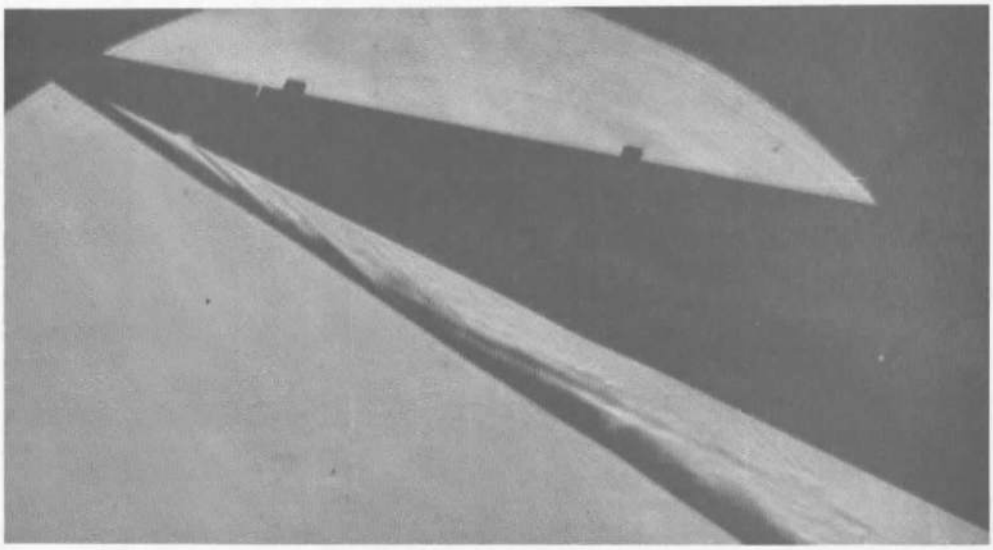

0 0.1 0.2 0.3 0.4

Nondimensional Distance from Leading Edge, x/L

b. α = 25 deg

Fig. 4 Typical Schlieren Photographs

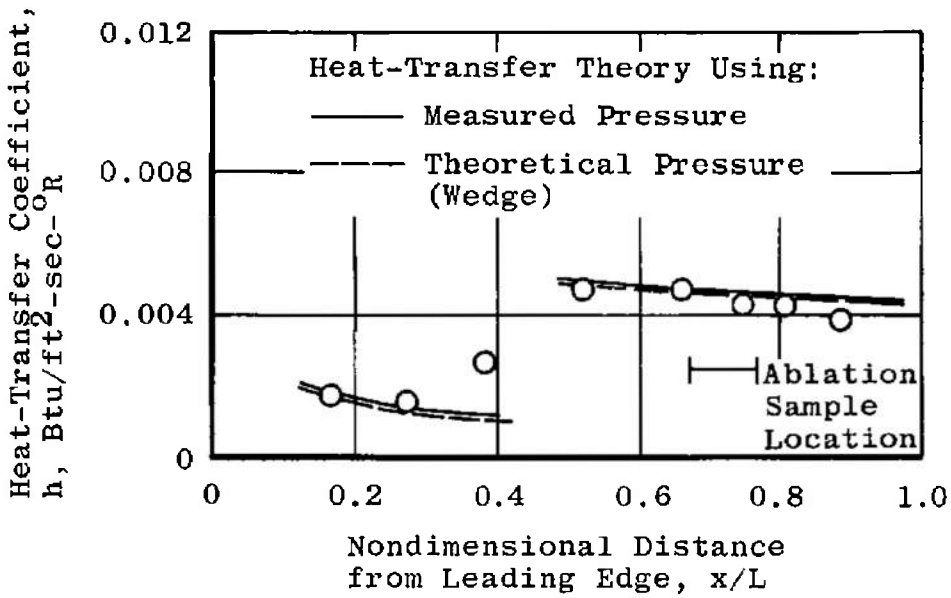

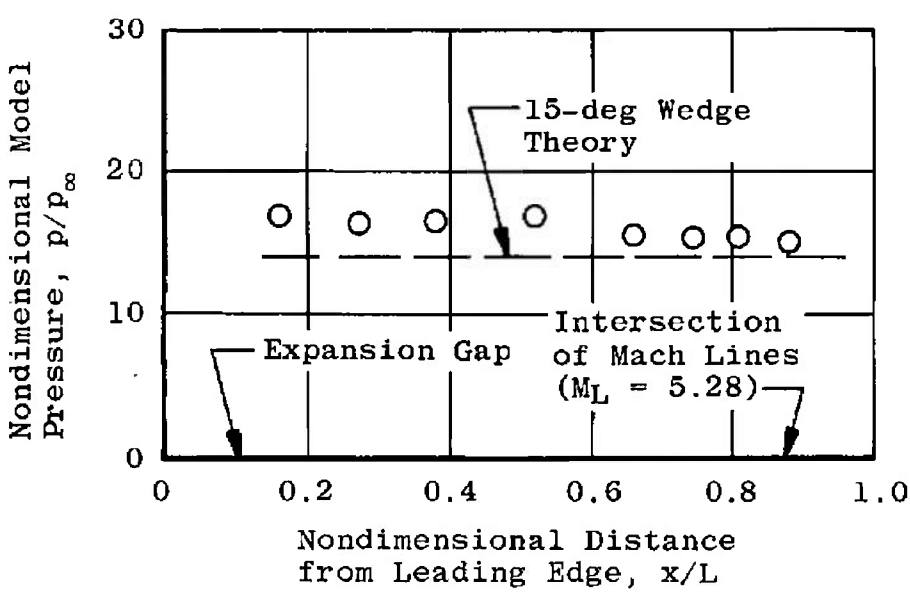

a. α = 15 deg

Fig. 5 Flat Plate Centerline Flow Characteristics

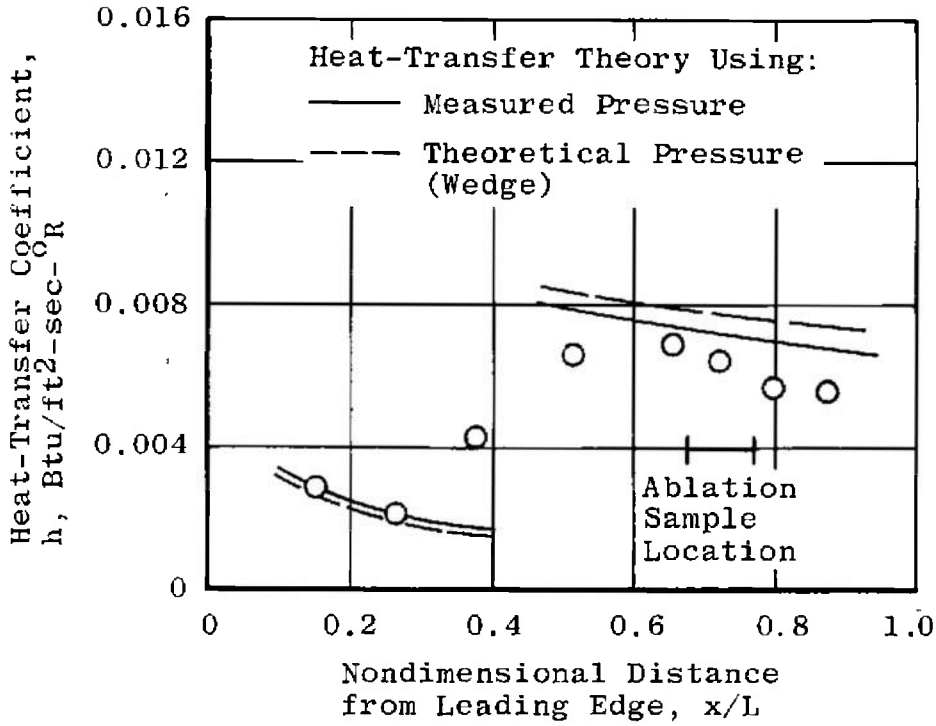

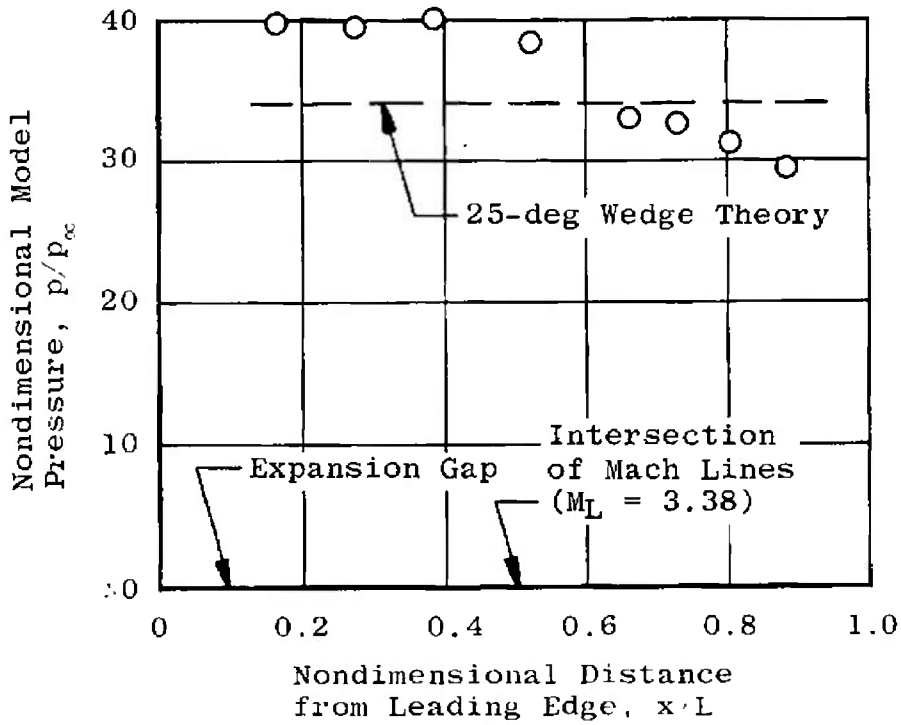

b. α = 25 deg

Fig. 5 Concluded

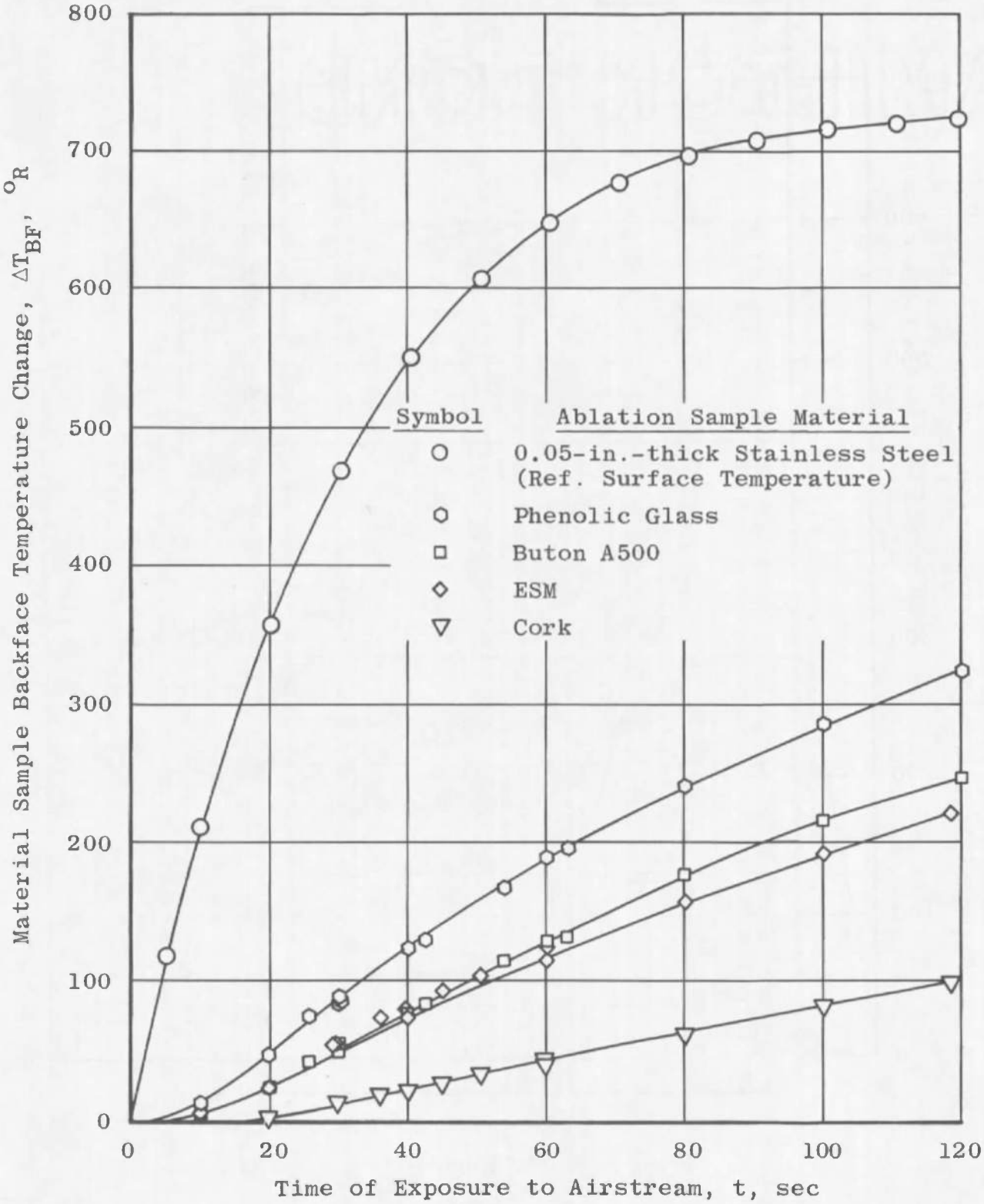

a. α = 15 deg

Fig. 6 Material Insulative Performance

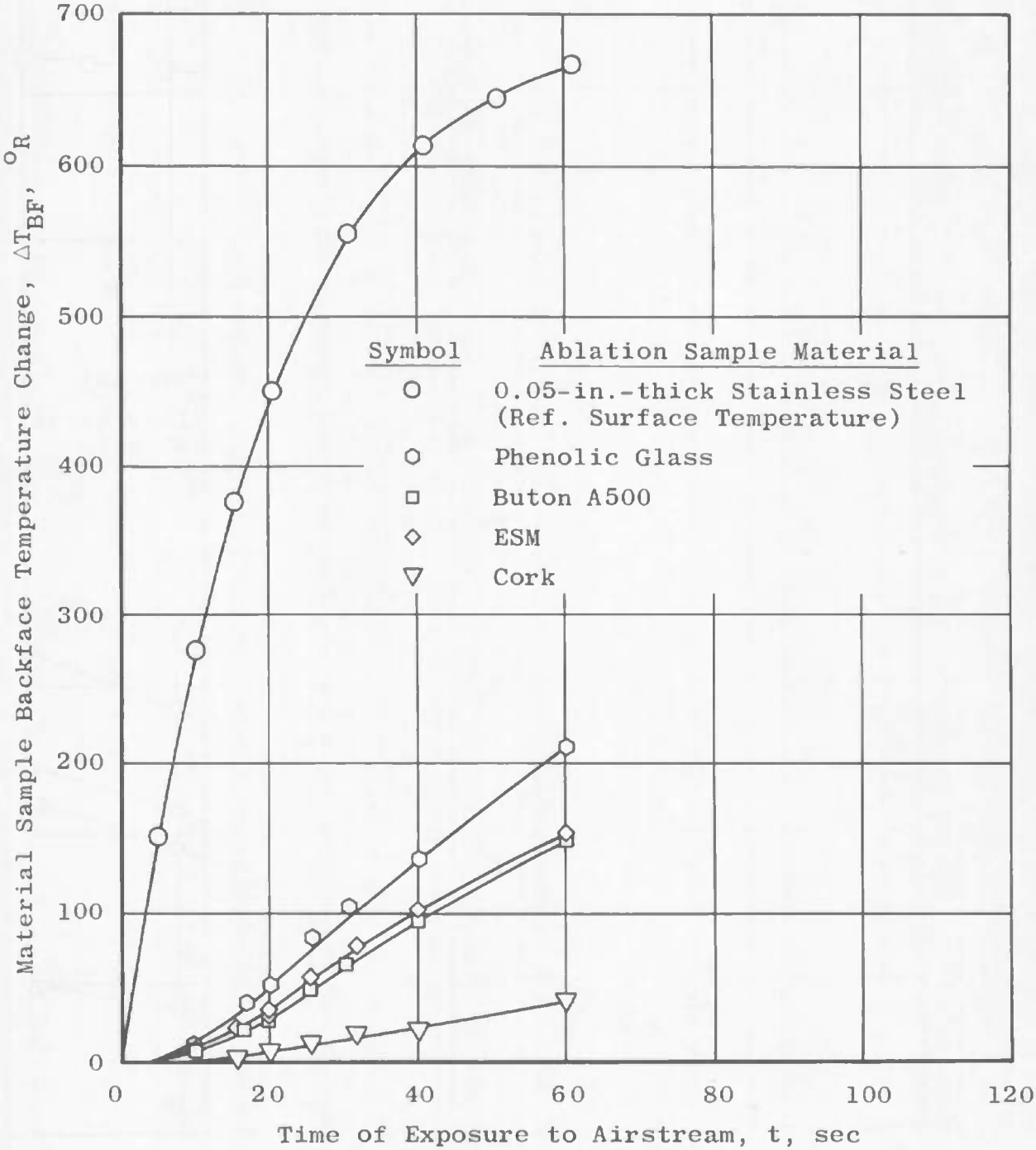

b. α = 25 deg

Fig. 6 Concluded

UNCLASSIFIED
Security Classification

DOCUMENT CONTROL DATA - R&D

(Security classification of title, body of abstract and indexing annotation must be entered when the overall report is classified)

1 ORIGINATING ACTIVITY *(Corporate author)* Arnold Engineering Development Center, ARO, Inc., Operating Contractor, Arnold Air Force Station, Tennessee	2a REPORT SECURITY CLASSIFICATION UNCLASSIFIED 2b GROUP N/A

3 REPORT TITLE

INSULATIVE PERFORMANCE OF SELECTED ABLATIVE MATERIALS IN A LOW ENTHALPY HYPERSONIC AIRSTREAM

4 DESCRIPTIVE NOTES *(Type of report and inclusive dates)*

N/A

5 AUTHOR(S) *(Last name, first name, initial)*

Carman, J. B., Jr., ARO, Inc.

6 REPORT DATE May 1966	7a TOTAL NO OF PAGES 19	7b NO OF REFS 2

8a CONTRACT OR GRANT NO AF40(600)-1200 b System 133B c Program Element 11016014 d	9a ORIGINATOR'S REPORT NUMBER(S) AEDC-TR-66-26 9b OTHER REPORT NO(S) *(Any other numbers that may be assigned this report)* N/A

10 AVAILABILITY/LIMITATION NOTICES

Qualified users may obtain copies of this report from DDC. Distribution of this document is unlimited.

11 SUPPLEMENTARY NOTES N/A	12 SPONSORING MILITARY ACTIVITY Ballistic Systems Division, Air Force Systems Command, Norton Air Force Base, California

13 ABSTRACT

Tests were conducted to investigate the insulative performance of selected ablative materials when exposed to a relatively low enthalpy hypersonic airstream. Samples of cork, an elastomeric shield material, phenolic glass containing a buton resin, and phenolic glass, mounted on the surface of a sharp flat plate, were injected into a Mach 10 airstream at 15- and 25-deg angles of attack. The model was tested at a high free-stream Reynolds number, 2.2×10^6 per foot, to produce turbulent flow over the samples. The test results, which consisted of back surface temperature histories on the 0.15-in.-thick samples, showed that cork provided the greatest heat protection.

DD FORM 1 JAN 64 1473

UNCLASSIFIED
Security Classification

UNCLASSIFIED

Security Classification

14 KEY WORDS	LINK A ROLE	LINK A WT	LINK B ROLE	LINK B WT	LINK C ROLE	LINK C WT
ablative materials						
low enthalpy						
performance						
hypersonic flow						
turbulent flow						

INSTRUCTIONS

1. ORIGINATING ACTIVITY: Enter the name and address of the contractor, subcontractor, grantee, Department of Defense activity or other organization *(corporate author)* issuing the report.

2a. REPORT SECURITY CLASSIFICATION: Enter the overall security classification of the report. Indicate whether "Restricted Data" is included. Marking is to be in accordance with appropriate security regulations.

2b. GROUP: Automatic downgrading is specified in DoD Directive 5200.10 and Armed Forces Industrial Manual. Enter the group number. Also, when applicable, show that optional markings have been used for Group 3 and Group 4 as authorized.

3. REPORT TITLE: Enter the complete report title in all capital letters. Titles in all cases should be unclassified. If a meaningful title cannot be selected without classification, show title classification in all capitals in parenthesis immediately following the title.

4. DESCRIPTIVE NOTES: If appropriate, enter the type of report, e.g., interim, progress, summary, annual, or final. Give the inclusive dates when a specific reporting period is covered.

5. AUTHOR(S): Enter the name(s) of author(s) as shown on or in the report. Enter last name, first name, middle initial. If military, show rank and branch of service. The name of the principal author is an absolute minimum requirement.

6. REPORT DATE: Enter the date of the report as day, month, year, or month, year. If more than one date appears on the report, use date of publication.

7a. TOTAL NUMBER OF PAGES: The total page count should follow normal pagination procedures, i.e., enter the number of pages containing information.

7b. NUMBER OF REFERENCES: Enter the total number of references cited in the report.

8a. CONTRACT OR GRANT NUMBER: If appropriate, enter the applicable number of the contract or grant under which the report was written.

8b, 8c, & 8d. PROJECT NUMBER: Enter the appropriate military department identification, such as project number, subproject number, system numbers, task number, etc.

9a. ORIGINATOR'S REPORT NUMBER(S): Enter the official report number by which the document will be identified and controlled by the originating activity. This number must be unique to this report.

9b. OTHER REPORT NUMBER(S): If the report has been assigned any other report numbers *(either by the originator or by the sponsor)*, also enter this number(s).

10. AVAILABILITY/LIMITATION NOTICES: Enter any limitations on further dissemination of the report, other than those imposed by security classification, using standard statements such as:

(1) "Qualified requesters may obtain copies of this report from DDC."

(2) "Foreign announcement and dissemination of this report by DDC is not authorized."

(3) "U. S. Government agencies may obtain copies of this report directly from DDC. Other qualified DDC users shall request through _____."

(4) "U. S. military agencies may obtain copies of this report directly from DDC. Other qualified users shall request through _____."

(5) "All distribution of this report is controlled. Qualified DDC users shall request through _____."

If the report has been furnished to the Office of Technical Services, Department of Commerce, for sale to the public, indicate this fact and enter the price, if known.

11. SUPPLEMENTARY NOTES: Use for additional explanatory notes.

12. SPONSORING MILITARY ACTIVITY: Enter the name of the departmental project office or laboratory sponsoring *(paying for)* the research and development. Include address.

13. ABSTRACT: Enter an abstract giving a brief and factual summary of the document indicative of the report, even though it may also appear elsewhere in the body of the technical report. If additional space is required, a continuation sheet shall be attached.

It is highly desirable that the abstract of classified reports be unclassified. Each paragraph of the abstract shall end with an indication of the military security classification of the information in the paragraph, represented as *(TS)*, *(S)*, *(C)*, or *(U)*.

There is no limitation on the length of the abstract. However, the suggested length is from 150 to 225 words.

14. KEY WORDS: Key words are technically meaningful terms or short phrases that characterize a report and may be used as index entries for cataloging the report. Key words must be selected so that no security classification is required. Identifiers, such as equipment model designation, trade name, military project code name, geographic location, may be used as key words but will be followed by an indication of technical context. The assignment of links, rules, and weights is optional.

UNCLASSIFIED

Security Classification