Distribution of this
document is unlimited

AD 631689

TECHNICAL REPORT

66-30 FD

DEVELOPMENT OF FLEXIBLE PACKAGED BREAD-TYPE PRODUCTS INCLUDING BREAD: PHASE I AND II - SINGLE AND MULTIPLE STAGE PROCESSING METHODS

by

C. G. Norris and S. I. Greenberg
The Pillsbury Company
Minneapolis, Minnesota

Contract No. DA 19-129-AMC-91(N)

Project reference:
1K643303D548

Series: FD-40

February 1966

Food Division
U. S. ARMY NATICK LABORATORIES
Natick, Massachusetts

DISTRIBUTION OF THIS DOCUMENT IS UNLIMITED.

The findings in this report are not to be construed as an official Department of the Army position unless so designated by other authorized documents.

Citation of trade names in this report does not constitute an official indorsement or approval of the use of such items.

Destroy this report when no longer needed. Do not return it to the originator.

FOREWORD

In the development of operational feeding systems to meet specialized military requirements, increasing emphasis is directed toward the development of conventional type foods which are thermally processed in flexible containers. These products with their logistic advantages should be ready-to-eat with no requirement for preparation at the point of use.

Such a processing system developed for bread and other bakery products would require sterilization of the product, and the prevention, or at least retardation, of staling while maintaining product acceptability during extended storage. Bread - the staff of life - would offer psychological advantages as well as providing a sound nutritional base for the diet of the soldier in the field.

The work covered in this report was performed by The Pillsbury Company, under Contract No. DA 19-129-AMC-91 (N) and represents two phases in the development of flexible packaged bread and bread type products made by both single and multiple stage processing methods. Official investigators were Calvin G. Norris and Sheldon I. Greenberg.

The U. S. Army Natick Laboratories Project Officer was D. E. Westcott, Plant Products Branch, Food Division.

FERDINAND P. MEHRLICH, Ph.D.
Director
Food Division

APPROVED:

DALE H. SIELING, Ph.D.
Scientific Director

W. W. VAUGHAN
Brigadier General, USA
Commanding

TABLE OF CONTENTS

SCOPE OF CONTRACT v

A. Phase I Single-Stage Processing Method (first 12 months) v

B. Phase II Single and Multiple-Stage Processing (Methods (second 12 months) v

SUMMARY viii

ABSTRACT x

I. MATERIALS AND METHODS 1

A. Equipment 1

B. Ingredients 2

C. Procedures 3

1. Dough Formulas, Mixing and Make-Up 3
2. Retort Processing 6
3. Experimental Design of Retorted Samples 7
4. Evaluation of Anti-Staling Properties of Stored Bread Samples 7
5. Sterilization Values 8
6. Sterility Analyses of Stored Bread Samples 8

II. RESULTS AND DISCUSSION 10

A. Single-Stage Process with Chemically Leavened Bread Systems 10

1. Evaluation of Glyceryl Monostearate and/or Glycerol in a Bread Flour (Experiments 1-9) 10
2. Evaluation of Glyceryl Monostearate and/or Glycerol in a Synthetic Flour: Gluten/Amylopectin (Experiments 10-15) 11
3. Evaluation of Glyceryl Monostearate and/or Glycerol in a Synthetic Flour Formula: Gluten/Amylose (Experiments 16-21) 12
4. Evaluation of Glyceryl Monostearate and/or Glycerol in a Synthetic Flour Formula: High Protein Flour/Amylopectin (Experiments 22-25) 13
5. Evaluation of Glyceryl Monostearate and/or Glycerol in a Synthetic Flour: High Protein Flour/Gluten/Amylopectin (Experiments 26-29) 14
6. Evaluation of Yeast Flavors in Bread (Flour and Synthetic Flour Formulas) (Experiments 30-40) 16
7. Evaluation of Three Wheat Glutens in a Synthetic Flour Formula (Experiments 41-43) 17
8. Evaluation of Three Leavening Systems in a Synthetic Flour Formula (Experiments 44-46) 18
9. Evaluation of Five Bread Softeners in a Synthetic Flour Formula (Experiments 47-56) 19
10. Evaluation of Shortening Levels in a Synthetic Flour Formula (Experiments 57-60) 20

Page No.

11. Evaluation of Three Sweeteners in a Synthetic Flour Formula (Experiments 61-67) 22
12. Evaluation of Varying Shortening and Different Sweetener Levels in a Synthetic Flour Formula (Experiments 68-85) 23
13. Evaluation of an Imitation Yeast Flavor and a Home Bread Flavor in a Synthetic Flour Formula (Experiments 86-88) 26
14. Evaluation of an Imitation Yeast Flavor at Varying Levels in a Synthetic Flour Formula (Experiments 89-92) 27
15. Evaluation of Glyceryl Monostearate at Varying Levels in a Synthetic Flour Formula (Experiments 93-95) 27
16. Evaluation of Chemically Leavened Retarded Doughs for Heat Processing in a Synthetic Flour Formula (Experiment 96) 29

B. Single-Stage Process with Yeast Leavened Bread Systems 29

1. Evaluation of Conjoined Crystals and Glyceryl Monostearate in a Bread Flour Formula (Experiments 97-99) 29
2. Evaluation of Varying Shortening Levels in Bread Flour and Synthetic Flour Formulas (Experiments 100-105) 30
3. Evaluation of Yeast Retarded Doughs for Heat Processing in a Synthetic Flour Formula (Experiment 106) 32
4. Evaluation of a Continuous Dough System (Experiment 107) 32

C. Multiple-Stage Process 33

1. Evaluation of Three Wheat Glutens in a Synthetic Flour Formula (Experiments 108-110) 34
2. Evaluation of Low Temperature - Long Time Prebake with Chemical and Yeast Leavened Systems (Experiments 111-122) 35
3. Evaluation of High Temperature - Short Time Prebake with Chemical and Yeast Leavened Systems (Experiments 123-128) 36
4. Evaluation of Single and Multiple Stage Process (Experiments 129-144) 37

III. CONCLUSIONS 41

IV. ESTIMATES OF COST TO MANUFACTURE 50,000, 100,000, and 150,000 UNITS USING THE SINGLE STAGE PROCESSING METHOD 42

V. APPENDIX

Tables 1 through 9 43
Ingredients Used, Experimental Design and Analyses
Tables 10 through 12 52
Estimates of Cost for Production, Equipment and Ingredients to Manufacture Bread Item
Tables 13 through 14 55
Calculation of Sterilization Values
Retort Design and Description 57

SCOPE OF CONTRACT

A PHASE I SINGLE-STAGE PROCESSING METHOD

1. The Contractor shall, commencing on 24 April 1963 and continuing through a 12 month period, develop a white bread or bread type product packaged in a lightweight flexible and/or semi-flexible package. The packaged product shall be shelf stable and shall be microbiologically safe or commercially sterile. It shall be capable of storage for a minimum period of six (6) months at 100°F. without spoilage or significant decrease in palatability. The finished product shall have an acceptable flavor and texture when consumed hot or cold. The net weight of the product in the package shall not be less than 1.5 nor more than 2.5 ounces.

2. The Contractor shall conduct studies involving product formulations, methods and processes, package designs and materials necessary to manufacture the item, utilizing single-stage processing where the dough is baked in the final package by means of retorting or microwave techniques, or other methods giving the desired finished product. Problem areas to be considered shall include the following:

   a. Elimination of undesirable texture and flavor changes associated with staling of fresh baked products.

   b. Prevention of foreign flavors due to leavening agents and packaging materials.

   c. Application of new, existing and conventional methods of baking and processing.

   d. Utilization of package designs which produce items resembling commercially baked products that will pack in a minimum amount of space.

   e. Selection of packaging materials which will withstand product manufacturing, storage and rough handling in a military ration.

3. The Contractor shall conduct tests showing the acceptability, stability, and sterility of the product. Methods and procedures for testing shall be of sufficient detail and accuracy to determine whether the product is safe for human consumption.

4. The Contractor shall, thirty (30) days prior to the scheduled date for completion of Phase I, furnish to the Government a revised technical proposal, if appropriate, and estimate of costs and/or time to perform Phase II. The Government reserves the option to negotiate such proposal and to require performance of Phase II. In no event, shall the Contractor proceed with performance of Phase II without the prior written authorization of the Contracting Officer.

B. PHASE II SINGLE AND MULTIPLE-STAGE PROCESSING METHODS

The Contractor shall perform the work of Phase II for a period not to exceed twelve (12) months commencing on the effective date of this supplemental Agreement (June 15, 1964).

1. The Contractor shall develop a white bread or bread type product packaged in a lightweight flexible and/or semi-flexible package. The packaged product shall be shelf-stable and shall be microbiologically safe or commercially sterile. It shall be capable of storage for a minimum period of six (6) months at 100°F. without spoilage or significant decrease in palatability. The finished product shall have an acceptable flavor and texture when consumed hot or cold. The net weight of the product in the package shall be not less than 1.5 nor more than 2.5 ounces.

2. The Contractor shall conduct studies involving product formulations, methods, and processes, package designs and materials necessary to manufacture the item, utilizing multi-stage processing by any method such as conventional baking methods, microwave techniques, or other methods giving the desired end products, and then placed in a suitable container, sealed, and sterilized. Problem areas to be considered shall include the following:

a. Elimination of undesirable texture and flavor changes associated with staling of fresh baked products.

b. Prevention of foreign flavors due to leavening agents and packaging materials.

c. Application of new, existing and conventional methods of baking and processing.

d. Utilization of package designs which produce items resembling commercially baked products that will pack in a minimum amount of space.

e. Selection of packaging materials which will withstand product manufacturing storage and rough handling in a military ration.

3. The Contractor shall conduct tests showing the acceptability, stability, and sterility of the product. Methods and procedures for testing shall be of sufficient detail and accuracy to determine whether the product is safe for human consumption.

a. Any Single Stage Processing Method which was developed during Phase I or results from work performed in Phase II which holds promise of accomplishment when evaluated and approved by the cognizant Project Officer may be further studied hereunder.

4. The Contractor shall at an appropriate technical juncture of the work hereof, with prior approval of the Project Officer not less than thirty (30) days prior to the scheduled completion date of Phase II, produce a sufficient quantity of the white bread or bread type product developed and packaged in accordance with paragraphs 1 and 2 of Phase II to provide for:

a. Not less than sixty (60) nor more than one hundred (100) (expendable samples) to be incubated at 30°C for not less than ten (10) days. The effects including spoilage shall be reported in writing to the Project Officer for his review, recommendation and/or technical approval prior to:

b. Delivery of six hundred (600) of the approved type of packaged product to U. S. Army Natick Laboratories, Natick, Massachusetts 01762, Attention: Project Officer, Food Division, Contract No. DA19-129-AMC-91(N).

c. Samples of bread or bread type products produced in accordance with paragraph 3.a., shall also be submitted in accordance with this paragraph 4.a. and 4.b.

5. The Contractor shall furnish estimates of cost to manufacture in quantities of 50,000, 100,000 and 150,000 units the item developed hereunder by the Multi-Stage Processing Method and Single-Stage Processing Method.

SUMMARY

A white bread type product packaged in a lightweight, flexible, laminated foil pouch has been developed. It is palatable, has an extended shelf life, and is commercially sterile.

Both a single and a multiple-stage process were explored, with the best over-all bread characteristics obtained using the former process.

Many formulations were investigated but the most promising produc s were those obtained with a synthetic flour composed of a high protein flour, a vital wheat gluten, and a waxy-maize starch, amylopectin. Glyceryl monostearate, a non-ionic surfactant, was the best anti-staling agent investigated. As an adjunct it prolonged the shelf life of bread chiefly by contributing to the improvement of the textural characteristics of the crumb.

The doughs were leavened either chemically or with yeast. If chemically, the best leavening system was found to be glucono delta lactone. This provided a rapid bread making procedure. Both leavening systems, however, provided the means to make acceptable bread samples.

The single-stage procedure involved sealing the uncooked dough in the laminated foil pouch and immediately subjecting it to heat processing. Multiple-stage

procedure involved a prior baking of the dough piece outside the pouch and then inserting it into the pouch, sealing, and heat processing to obtain sterility.

The retort and control system used for heat processing was specially designed and built expressly for this project. It was a steam-water cooker with semi-automatic controls to program both the temperature and air pressure inside the retort. In addition, a sensing device was an integral part of the retort control system. Its function was to continuously monitor the condition of the expanding pouch and thus program changes in the retort to either increase, maintain, or decrease the air pressure to keep the pouch from bursting.

Results of bacteriological analyses of the retorted bread items indicated that they were commercially sterile. This was achieved whenever the F_o values exceeded 4. The range of F_o values from the experiments was 4 to 9.

The storage life of the typical bread item at 100°F has been extended from 1 to 14 weeks without greatly exhibiting those properties generally attributed to the staling process.

This report covers many other processing and formulation areas from which pertinent information was obtained, and which led to the development of an acceptable bread type product. Certain areas received limited investigation effort for lack of time, but show signs of possible process or product improvement. If further research effort is expended on this type of product, some of these areas should be investigated. These include preparation of samples using a continuous dough system.

ABSTRACT

A white bread type product packaged in a lightweight, flexible pouch has been developed. It is palatable, stable, and commercially sterile. Both single and multiple stage processes were explored. Many formulations were tested with the best products obtained with a synthetic flour formula chemically leavened. A steam water retort was used for cooking and sterilizing the bread product. Sterilization values of F_o 4 were required for sterility.

I. MATERIALS AND METHODS

A. EQUIPMENT

1. Hobart, Model A-200 food mixer with the 12 quart bowl and dough hook. Hobart Manufacturing Company, Troy, Ohio.
2. National Sheeting Roll, 6 inch widths. National Manufacturing Company, Lincoln, Nebraska.
3. Fermentation Cabinet. Model 506S, Automatic Despatch Oven Company, Minneapolis, Minnesota
4. Oven, Reed Reel Gas Fired, Serial No. 1-271. Paul Reed Oven Company, Kansas City, Missouri.
5. Packaging, Robot Automatic Controlled Air Operated Jaw Sealer. Model RT-1, Serial No. 354. Pack-Rite Machines, Milwaukee, Wisconsin.
6. Pouch, 4-3/4 x 7 inches, outside flat measurements. Laminated foil material: 0.50 mil. polyester, (Mylar), 0.50 mil. aluminum foil, and 3.0 mil. polyolefin. Continental Can Company, Inc., Flexible Packaging Division, New York, N. Y.
7. Dough Cutter, 3-1/4 x 4-1/4 inches. The Pillsbury Company, Minneapolis, Minnesota.
8. Retort, Steam-Water, specially designed and assembled. The Pillsbury Company, Minneapolis, Minnesota.
9. Honeywell Brown Electronik recording potentiometer. Copper-Constantan Range 0-350° F. Minneapolis-Honeywell Regulator Company, Brown Instrument Division, Philadelphia, Pennsylvania.
10. Continuous Dough Machine specially designed and built. The Pillsbury Company, Minneapolis, Minnesota.
11. Fostoria Infrared System, quartz lamp. Fostoria Corporation, Fostoria, Ohio.
12. Raytheon Mark V Radarange. Raytheon Company, Microwave Cooking Dept., Waltham, Massachusetts.

B. INGREDIENTS

1. Flour, Bread - Southwestern Hard Winter Wheat. Protein 12%. The Pillsbury Company, Enid, Oklahoma.

2. Flour, High Protein - BEEVO, Protein 21%. The Pillsbury Company, Springfield, Illinois.

3. Vital Wheat Gluten - MIDSOL, Protein 75%. The Midwest Solvents Company, Inc., Atchison, Kansas.

4. Vital Wheat Gluten - VICRUM, Protein 70%. Hercules Powder Company, Wilmington, Delaware.

5. Vital Wheat Gluten - VI-TAL, Protein 75%. Wheat Products Company, Colorado Springs, Colorado.

6. Starch Amylopectin - AMIOCA, 100% Amylopectin. American Maize Products Company, Roby, Indiana.

7. Starch Amylose-NEPOL, 90% Amylose and 7% Amylopectin. A. E. Staley Manufacturing Company, Decatur, Illinois.

8. Glycerol Monostearate (GMS) - MYVEROL Type 18-00. Distillation Products Industries, Rochester, New York.

9. Conjoined Crystals: Glycerol Monostearate/Propylene Glycol Monostearate (GMS/PGMS) - MYVATEX Type 3-50. Distillation Products Industries, Rochester, New York.

10. Distilled Monoglyceride Emulsifier w/Non-fat Skimmed Milk Solids, Sodium Propionate, Lecithin and Vinegar - MYVATEX Type 25-00. Distillation Products Industries, Rochester, New York.

11. Polyoxyethylene (8) Stearate - MYRJ 45. Atlas Chemical Industries, Inc., Wilmington, Delaware.

12. Sodium Stearyl Fumarate - PRUV. Chas. Pfizer & Co., Inc., New York, N.Y.

13. Sorbitol, Powder. Atlas Chemical Industries, Inc., Wilmington, Delaware.

14. Fully Inverted Sugar - REGULAR NULOMOLINE. The Nulomoline Division, SuCrust Corporation, New York, N.Y.

15. Shortening, Hydrogenated, All Vegetable - Durkee Famous Foods, Chicago, Ill.

16. Sodium Acid Pyrophosphate #28 (SAPP) - Monsanto Company, St. Louis, Missouri.

17. Sodium Aluminum Phosphate (SAP) - Victor Chemical Division, Stauffer Chemical Company, New York, New York.

18. Glucono Delta Lactone, 10% Calcium Stearate (GDL) - Pfizer & Co., Inc., New York, New York.

19. Yeast, active dry. Red Star Yeast Company, Milwaukee, Wisconsin.

20. Yeast, inactive dry. Red Star Yeast Company, Milwaukee, Wisconsin.

21. Yeast, inactive dry, VICO 400 Type B. Vico Products Company, Chicago, Illinois.

22. Imitation Yeast Flavor, No. 15462. Fries and Fries, Cincinnati, Ohio.

23. Home Bread Flavor, No. 5463. Fries and Fries, Cincinnati, Ohio.

C. PROCEDURES

1. Dough Formulas, Mixing and Make-Up

Tables 1-9 are flow sheets that list the ingredients used and other pertinent information in the various experiments described. Two chemically leavened systems and a yeast leavened system were used. If chemically leavened, they were either composed of soda 3.3 parts by weight, with a blend of sodium acid pyrophosphate (SAPP) 1.6 and sodium aluminum phosphate (SAP) 4.9 parts by weight; or, soda 3.3 and glucono delta lactone (GDL) 8.7 parts by weight. If yeast leavened, it was either with compressed yeast 2.0 or with an active dry yeast 1.0 parts by weight.

Myverol Type 18-00, GMS (glyceryl monostearate) will frequently be referred to in this report. It is a solid beaded material and it was added to the bread formulas always as a dispersion in water. Smooth dispersions of GMS have been made readily by the following sequence: heat the water to 154° F, stop the heating; then while stirring gradually add the Myverol. Under these conditions the mixture is always between 140 and 154° F during the dispersion. Stirring should be continued as long as the temperature is above 140° F. The dispersion can then be allowed to cool, or

refrigerated, until used. Aliquots of a 4% dispersion were used in experiments recorded in this report. The water in the dispersion was accounted for as part of the absorption water required during mixing of the doughs.

The mixing procedure varied for many of the experiments. These are indicated by numbers following the heading "Mixing Stages" in those tables in which that information was required. If the mixing stage number is 1, all of the ingredients were placed in the mixing bowl together and mixed in one step. This procedure is often termed as a 100% straight dough.

If the number is recorded as 2, just GMS (glyceryl monostearate) dispersed in water was used as an additive. The flour and/or starch, GMS and water were first given a preliminary mixing, then the rest of the ingredients were added and the dough mixed to development.

If the number is recorded as 2', just glycerol was used as an additive. All the ingredients and water were added and mixed in the first step. Glycerol was then added and mixing continued until the dough was mixed to development.

If the number is 2", this means both GMS and glycerol were used as additives. The flour and/or starch, GMS, water and all the remaining ingredients were first mixed, then the glycerol was added during the final mixing period.

If the number recorded is 3, then both GMS and glycerol were additives. First, the flour and/or starch, GMS and water were mixed together; second, the rest of the ingredients were added and mixing continued; and third, the glycerol was finally added and the dough mixed to development.

The mixing procedure also varied in a yeast leavened system when a sponge and dough procedure was used. Typically, this is a two stage mixing procedure. This system was used infrequently and when it was, a special note will be made in the table and in the narrative portion of the report. Later, the procedure used for the yeast leavened system was changed to 100% straight dough mixing procedure.

Dough handling after mixing varied with the leavener used in the bread formula. If leavened with yeast, then the doughs required fermentation, 86°F at 86% relative humidity and the schedule was as follows:

Sponge and Dough Fermentation Schedule	Minutes
Sponge ferments	270
Remix sponge with dough and ferment additional	15
Make-up, pouch and proof an additional	30
Seal and retort	

Straight Dough Fermentation Schedule	Minutes
First punch after	90
Second punch after	40
Make-up and pouch after	50
Proof in pouch an additional	30
Seal and retort	

If the doughs were chemically leavened, they were made up and sealed immediately; but if yeast leavened, they were made up, proofed 30 minutes, and then sealed.

The procedure used to make up the dough pieces was standardized. The doughs prepared for each experiment were sheeted 1/8 inch thick from which 27 pieces were cut, each 3-1/4 x 4-1/4 inches. They were inserted into the foil pouches, sealed either immediately or 30 minutes later, depending on whether or not they were chemically or yeast leavened doughs, and then placed in the racks depicted in the Appendix, Retort Design and Description. The racks with the pouches in them were either immediately processed or refrigerated until processed.

The technique used in the multiple stage process was as follows: After the dough pieces were cut to the dimensiond 3-1/4 x 4-1/4 inches, they were placed on bake sheets with shallow sides. They were baked at those temperatures and times designated for that experiment in the body of the report. The bread was allowed to cool

for 10 minutes before it was inserted into a pouch and sealed. Finally, they were retorted to obtain sterility.

2. Retort Processing

Retort design and pressure and temperature control systems are explained in detail in the Appendix, Retort Design and Description. The capacity of the retort was 81 pouches in three racks of 27 each.

Bread samples were inserted into racks which in turn were placed into the retort. The retort was filled with water and a propeller type agitator used to uniformly circulate the water. Steam heating and cold water cooling were accomplished by the use of copper coils which had been placed in the bottom of the retort for heat exchange purposes. Samples of doughs were sealed in the pouch with the thermocouples inserted into the middle of the dough piece and through a special opening in the side of the retort to a recorder. Heat penetration curves showed that temperatures of the product at different points within the retort remained quite constant ($\pm$ 2°F).

Bread samples in the laminated foil pouches were successfully processed at temperatures up to 260°F without bursting because of the controls installed. However, the same purpose could be achieved manually by observing a pouch placed in a holder in front of a viewing port cut into the side of the retort and allowing air pressure to be introduced into the autoclave as the pouch enlarged.

The rate of temperature rise and descent in the retort could be regulated between 0.5 to 8 degrees per minute when in the controlled mode.

The procedure that was finally adopted for processing the pouched samples was as follows: the automatic controls were programmed to attain a maximum temperature of either 250 or 255°F; to give a set rate of heating and cooling of 6°F per minute; and, to hold at that maximum temperature selected for either 20 or 15 minutes, respectively.

The internal bread temperature varied with the maximum set temperature of the retort. When set at 250°F, the average minimum - maximum bread temperatures were 240 to 245°F. When set at 260°F they were 245 to 250°F.

3. Experimental Design of Retorted Samples

The retort has room for three racks, each holding 27 pouches. One rack was used for each complete experiment and the 27 pouches were divided for use as follows:-

1 - Contained the thermocouple wires for measuring product temperature

3 - were used for bacteriological analysis

10 - were used for 100°F. storage

10 - were used for 0°F. storage

3 - were extras.

4. Evaluation of Anti-Staling Properties of Stored Bread Samples

Criteria for staling as used in this report is based on changes in textural characteristics as well as development of flavors generally considered as not acceptable. Textural characteristics are largely mechanical that can be subdivided into primary parameters of hardness and cohesiveness. Hardness would be relative to the original softness of the bread whether by biting or by compression under the fingers or with mechanical devices. Cohesiveness is the retention of smoothness in the mouth during mastication as opposed to the development of grittiness or granular sensation.

Bread samples were stored at 0° and 100°F. Evaluation of these samples was made weekly for external and internal bread characteristics: external for symmetry and internal for crumb grain and crumb texture. Based on these characteristics, the Tables contain the overall bread quality score for most of the experiments discussed. These are relative values based on 100 as a perfect score. Flavor, though important,

was used in this report to decide whether or not an ingredient or a procedure should be considered for additional tests in other experiments to be tried. Thus, comments concerning flavor will be included in the body of the report and not evaluated in the tables.

Evaluations of bread samples for quality were discontinued when it became apparent that the samples in that series were unacceptable because of marked changes in textural characteristics and/or flavor.

5. Sterilization Values

Heat penetration data have been obtained intermittently during heat processing of numerous experiments. The purpose was to verify the conditions required to obtain a commercially sterile bread. Calculations of values from the data in conjunction with the microbiological analyses indicated that the minimum F_0 value required for a sterile product was 4. Once this had been established the controllers on the retort were programmed to provide sufficient time and temperature so that the F_0 value of 4 was always exceeded. A representative series of heat penetration data with their F_0 values are recorded in the Appendix, under Sterilization Values.

6. Sterility Analyses of Stored Bread Samples

Samples of bread were examined microbiologically to determine the presence of anaerobic or facultative organisms. The pouched bread samples were incubated at 99 and 126°F for 21 days. After that period the pouches were prepared for the aseptic removal of samples in the following manner: the pouches were placed in warm water containing 400 ppm chlorine sanitizer for a minimum of 15 minutes to sterilize the surfaces. The surface of the pouches was rinsed with 70% ethyl alcohol. Each pouch was opened aseptically and a portion of the bread placed into each of two tubes of Fluid Thioglycollate Medium BBL No. 01-140. Culture tubes 20 x 150 millimeters containing 16 milliliters of the test medium were used. The test cultures were incubated for 48 hours at 99°F and then examined for bacterial growth.

A series of innoculated pouches containing ATCC 7955, [illegible] were heat processed at 255°F for 15 minutes; results were negative for growth.

Results of intermittent microbiological analyses of bread experiments discussed in this report have consistently found the bread to be negative for spoilage.

II. RESULTS AND DISCUSSION

A. SINGLE-STAGE PROCESS WITH CHEMICALLY LEAVENED BREAD SYSTEMS

1. Evaluation of Glyceryl Monostearate and/or Glycerol in a Bread Flour (Experiments 1-9)

Purpose: To determine the effectiveness of GMS (glyceryl monostearate) and/or glycerol in retarding the staling of bread made with bread flour.

Procedure: Table 1, Experiments No. 1 through 9, lists the ingredients used, indicates the experimental design and records the analytical analyses. The mixing stages used in this and other experiments are explained in the section on procedures under Materials and Methods. The maximum amount of water used in the doughs was 66 parts by weight. Retorting of samples was done at 250° F. for 20 minutes and samples were then stored at 0° F. and 100° F.

Evaluation: Dough handling characteristics were good. The breads obtained from these and the following experiments were generally considered acceptable for purposes of evaluation. This provided the means to make a judgment to determine the direction of subsequent experimental designs. However, it was anticipated that the bread type product would improve in volume per unit, weight, symmetry, crumb grain and texture with time experience and knowledge.

Samples were evaluated for textural characteristics one day after processing and again at the end of five weeks. The one day old samples were considered as the fresh bread samples for purposes of evaluation. The crumb texture of fresh samples of bread containing glycerol either alone (Expt. 4) or with GMS (Expts. 5-9) exhibited improved cohesiveness over those containing only GMS (Expts. 2 and 3). The crumb of the sample containing none of the additives was less cohesive in the mouth during chewing. The initial flavor sensation of breads containing glycerol was one of sweetness which soon reverted to a bitter aftertaste.

After five weeks of storage at 100° F, all of the bread samples were judged as stale: hard to bite, dry and gritty when chewed, and flavor was unacceptable. However, differences were noted and recorded: samples containing only GMS (Expts. 2 and 3) were less firm and were significantly not as dry in the mouth when chewed as were those

containing glycerol (Expt. 4) or GMS/glycerol (Expts. 5-9). The poorest sample in these experiments contained none of the additives (Expt. 1).

Conclusion: None of the additives were effective in retarding the staling of bread made with bread flour. Alone, glycerol was less effective in counteracting the staling process in bread than those samples with contained both GMS and glycerol. These findings were in part to be expected. The amylose fraction in wheat starch is generally regarded as that part of the starch which is chiefly concerned with staling when starch retrogradation occurs. To reduce the amount of this fraction was the purpose of formulating synthetic flour formulas in the next series of experiments.

2. Evaluation of Glyceryl Monostearate and/or Glycerol in a Synthetic Flour: Gluten/Amylopectin (Experiments 10-15).

Purpose: To determine what effect a synthetic flour system, composed of a wheat gluten and a starch, amylopectin, as a replacement for bread flour, would have on the anti-staling properties of bread. Also, to determine what effect GMS (glyceryl monostearate) and/or glycerol would have as additives in this flour.

Procedure: The flour portion in the bread formula was replaced with "Vicrum" wheat gluten, 35 parts, and amylopectin, a waxy maize corn starch, 65 parts, by weight. Two parts of GMS and/or 15 parts of glycerol, by weight, were added to this formula using the mixing stages and experimental design indicated in Table 1. The maximum amount of water used in the dough was 80 parts by weight. Samples were retorted at 250° F. for 20 minutes and then stored at 0° and 100° F.

Evaluation: The doughs were more elastic than those obtained from a bread flour. Bread samples were acceptable for the purpose of evaluating crumb texture and flavor. Fresh bread samples were resilient to compression but tough to bite, even though they were soft and gummy when chewed. A strong gluten flavor was evident in all samples in this series.

After storage for five weeks at 100° F, all samples were firm to compression and firm to bite and tough to chew. Samples containing GMS (Expts. 11 and 12), regardless of the mixing stage used, retained the best textural characteristics for eating.

Bread samples containing only GMS (Expts. 11 and 12) were the easiest to bite and chew; next were samples containing both GMS/glycerol (Expts. 14 and 15); third was bread containing only glycerol (Expt. 13) whose crumb felt drier in the mouth when eaten. The bread sample without either additive (Expt. 10) was considered stale because it was extremely firm to bite and difficult to chew.

Conclusion: The breads exhibited some of the characteristics of their doughs in that they were extremely resilient to compression and to bite, tough to chew with a cohesive, gummy mouth feel. Nevertheless, these products were considered superior to their counterparts made with a regular bread flour (Expts. 1-9). The flavor of gluten was undesirable and it was recognized that further formulation work would be to eliminate or reduce substantially this negative factor.

3. Evaluation of Glyceryl Monostearate and/or Glycerol in a Synthetic Flour Formula: Gluten/Amylose (Experiments 16-21).

Purpose: To determine what effect a synthetic flour system composed of wheat gluten and a starch, amylose, as a replacement for bread flour, would have on the antistaling properties of bread. Also, to determine what effect GMS (glyceryl monostearate) and/or glycerol would have as additives in this flour blend.

Procedure: The flour portion of the formula was replaced with "Vicrum", a wheat gluten, 35 parts, and amylose, 65 parts, by weight. GMS, 2 parts, and glycerol, 15 parts, by weight, were added to the formula using the mixing stages and experimental design indicated in Table 2. The maximum amount of water used in the doughs was 125 parts by weight.

Evaluation: The absorption requirements were high and were attributed to the hydration requirement of the amylose fraction in the synthetic flour. The dough characteristics were extremely poor: firm, grainy and malleable. The bread samples were extremely dense ;

The doughs did not expand during processing because of poor gas retention. The bread samples felt very moist and rubbery when handled. The samples lacked volume

and crumb grain, consequently could not be evaluated for textural characteristics. The flavor was totally unacceptable.

Conclusion: The amylose starch fraction used in this series of experiments was extremely detrimental during the dough stage, during dough make-up, and in the final bread properties after processing.

4. Evaluation of Glyceryl Monostearate and/or Glycerol in a Synthetic Flour Formula: High Protein Flour/Amylopectin (Experiments 22-25)

Purpose: To determine what effect a synthetic flour composed of a blend of high protein flour and a starch, amylopectin, would have on the bread to extend its shelf life. Also, to continue with that part of the experimental series that has to do with determining the effectiveness of GMS (glyceryl monostearate) and/or glycerol in this system to retard staling.

Procedure: The flour portion of the formula consisted of 100 parts of high protein flour (21% protein) and 25 parts of amylopectin, by weight. The mixing stages and experimental design which includes the addition of GMS and/or glycerol are given in Table 2. The maximum amount of water used in these experiments was 90 parts by weight. Retorting was done at 250° F. for 20 minutes. Bread samples were stored for later evaluation at temperatures of 0° and 100° F.

Evaluation: Dough handling characteristics were excellent. Breads were acceptable for symmetry, crumb grain and for evaluating textural characteristics.

Fresh bread samples containing GMS and produced using the two-stage mixing procedure (Expt. 23) were judged softest. After three weeks storage, no noticeable difference in firmness was detected whether a one or two-stage mixing procedure was used with the doughs (Expts. 22 and 23). The bread samples containing GMS/glycerol (Expts. 24 and 25) during storage evaluation were consistently judged to be more firm to bite and chew than the bread containing only GMS.

After ten weeks the flavor of samples containing GMS/glycerol was more acceptable than those samples containing only GMS. Masking the development of off-flavors could be attributed to the glycerol component in the formula. Nevertheless, when the samples containing both additives were eaten, the impression received from the crumb was that they were drier and granular. Moisture determination of the crumb verified the former: 41% crumb moisture for GMS (Expts. 22 and 23) compared to 34% for GMS/glycerol (Expts. 24 and 25).

Conclusion: Better bread flavor was obtained from these experiments than from those in which the bread samples were formulated with gluten/amylopectin (Expts. 10-15). Bread samples containing only GMS were superior in shelf life to those samples containing both additives, GMS/glycerol. It was still felt, however, that the crumb resiliency of any of these samples, after five weeks, was too hard to be acceptable.

5. Evaluation of Glyceryl Monostearate and/or Glycerol in a Synthetic Flour: High Protein Flour/Gluten/Amylopectin (Expts. 26-29)

Purpose: To determine what effect a synthetic flour composed of a blend of a high protein flour, wheat gluten, and amylopectin would have on the bread to extend its shelf life. Simultaneously, to continue to determine the effectiveness of GMS (glyceryl monostearate) and/or glycerol to retard staling of bread made with this flour.

"Vicrum" wheat gluten was added to the high protein flour to effect a reduction in its total starch content. With a reduction in the total starch content there would also be a reduction of the amylose fraction in the final blend. The addition of amylopectin to the blend would further function as a diluent of the amylose remaining in the flour system. The result would be to shift the ratio of amylopectin to amylose to a more favorable balance for the synthetic flour system to contribute to extending the shelf life of the bread.

Procedure: The flour portion was compounded from 85 parts of high protein flour, 15 parts of "Vicrum" wheat gluten and 25 parts of amylopectin, by weight. The mixing stages are indicated in Table 2, Experiments 26 through 29. The maximum amount of water used in the doughs was 95 parts by weight. Retorting was done at 250° F. for 20 minutes. Storage conditions for bread samples were 0° and 100° F.

Evaluation: Doughs and bread were good. Bread samples when fresh were extremely resilient but tough to bite and chew. After six weeks the texture of these samples was firmer but retained a smooth, cohesive mouth feel when eaten. The samples containing only GMS (Expts. 26 and 27) were superior to those samples containing GMS/glycerol (Expts. 28 and 29). The latter two experiments exhibited less desirable mouth characteristics as they felt drier when eaten. However, the glycerol was more effective in partially masking the flavor of gluten in this experiment than in that with gluten/amylopectin (Expts. 10-15).

After six weeks of storage at 100° F, one was unable to differentiate between samples of the same formula whose doughs were mixed according to a single or a multiple mix procedure.

Conclusion: Bread samples from these three experiments were tougher to bite and chew than bread samples made with high protein flour/amylopectin (Expts. 22-25) but easier than those made with gluten/amylopectin (Expts. 10-15). The flavor of gluten in the bread at 15 parts by weight, was not as objectionable as when the level of gluten in the flour was 35 parts by weight (Expt. 10-15).

The only apparent advantage found in using glycerol in the various experiments was its effectiveness to partially mask the gluten and staling flavor. This was not considered a sufficient contribution to the experiments for acceptance when weighed against the glycerol imparting a feeling of dryness to the bread crumb when eaten.

The better flavor and the extended shelf life with these samples indicates an improvement in formulation obtained with the synthetic flour composed of a high protein flour, wheat gluten and amylopectin starch.

A single stage mixing procedure was found to be adequate for samples that are to be subjected to an extended storage time. Because of the results obtained from these and past experiments, the multiple mixing concept and glycerol as an additive were eliminated from further consideration. Emphasis was placed on continuing to formulate better flavor and extended shelf life into the bread products.

6. Evaluation of Yeast Flavors in Bread (Experiments 30-40)

Purpose: To determine the effectiveness of yeast and yeast flavors in improving the flavor of bread made with either bread flour or synthetic flour formulas and chemically leavened.

Flavor of the bread product, along with staling and sterility, is a critical factor for the acceptance of the product. These tests initiate that area in which flavor became an integral part of the experimental program.

Procedure: Table 3, Expts. 30 through 40, lists the ingredients and indicates the design of these experiments. A single stage mixing procedure was used and all formulas contained GMS (glyceryl monostearate). The flavoring ingredients tested were: Vico-400 B inactive dry yeast, and Red Star inactive dry yeast; the Red Star active dry yeast was used in the chemically leavened system, also, for flavor. Both two parts and four parts, by weight, of these ingredients were used. They were added as a suspension in part of the water used for absorption. The flour systems in these formulas were: a bread flour (Expts. 30-34), a high protein flour/amylopectin blend (Expts. 35-37) and a high protein flour/wheat gluten/amylopectin blend (Expts. 38-40).

Evaluation: Breads were evaluated after one day and after 5 weeks of storage. When fresh, the flavor of any of the additives was easily detected in bread made with the bread flour (Expts. 30-34) and least in bread made with the high protein flour/gluten/amylopectin (Expts. 38-40). The inactive dry yeast, Red Star, was superior to the other two flavoring ingredients in contributing to an improvement in bread flavor. The inactive dry yeast, Vico 400-B, ranked second for flavor, while the active dry yeast, used for flavoring, resulted in a darkening of the crumb plus

an undesirable aroma and flavor.

After five weeks the bread flour samples were stale and the crumb texture of the high protein flour/amylopectin samples was beginning to develop a granular feel and a detectable off-flavor when eaten. The textural characteristics of bread made with the synthetic blend of high protein flour/gluten/amylopectin was moist, smooth and cohesive when eaten. Even after fourteen weeks this sample, while firm, felt moist and smooth when eaten, while the breads from the other two flour systems were stale.

Conclusion: A yeast flavor was easily detected in fresh bread made with the bread flour, but that flavor was readily masked with the off-flavors that developed when the bread staled - which it rapidly did. In the synthetic flour formula containing high protein flour/"Vicrum" wheat gluten/amylopectin, the yeast flavor was masked by the strong gluten flavor. However, this was the best formulation for the other bread characteristics: symmetry, crumb grain, and textural characteristics. Thus, a series of tests was conducted to improve the synthetic bread flavor by changing the wheat gluten used in its formulation.

7. Evaluation of Three Wheat Glutens in a Synthetic Flour Formula (Experiments 41-43)

Purpose: To determine which of three vital wheat glutens would contribute the least gluten flavor to bread made with a synthetic flour formula. The three gluten ingredients were "Vicrum", "Midsol" and "Vi-Tal". The first, "Vicrum", was commercially prepared from a neutral water preparation, while "Midsol" and "Vi-Tal" were commercially prepared from an alkali and acid dispersion, respectively.

Procedure: Table 3, Expts. 41 through 43, shows the variables used in this series of experiments. Each synthetic flour formula contained the high protein flour, 85 parts, one of the three wheat glutens, 15 parts, and amylopectin, 25 parts, by weight. A single-stage mixing procedure was used. The samples were retorted at 250° F. for 20 minutes.

Evaluation: Dough handling characteristics were good. Bread samples were acceptable for symmetry, crumb grain and texture. The breads were evaluated 24 hours after processing by a taste panel consisting of eight people. The "Vi-Tal", acid dispersed, gluten (Expt. 41) was judged superior to the other two gluten products by seven of the panel members.

Conclusion: Results from these experiments led to the decision to use the acid dispersed gluten as the supplement in subsequent synthetic flour formulas. Its presence in the bread product contributed far less to the off-flavor than either of the other two gluten additives - "Midsol", alkali dispersed, or "Vicrum", neutral preparation.

8. Evaluation of Three Leavening Systems in a Synthetic Flour Formula (Experiments 44-46)

Purpose: To determine which of two chemical leavening systems performs better in terms of both dough and bread characteristics,and then to compare the chemical with a yeast leavened system.

Procedure: Three leavening systems - yeast, SAPP/SAP (sodium acid pyrophosphate/sodium aluminum phosphate) and GDL (glucono delta lactone) - were used with the synthetic flour system selected from the previous series of experiments (Expts. 41-43). The experimental design is shown in Table 3. The yeast experiment (Expt. 44) was used in a 65-sponge and 35-dough formula using a two-stage mixing procedure with its mixing and fermentation schedule outlined on page 5. The two chemical leavening systems (Expts. 45 and 46) were used in a single-stage mixing procedure.

Evaluation: Doughs obtained with any of the three leavening systems were acceptable though there were differences. The dough made with yeast (Expt. 44) or with GDL (Expt. 46) was softer and more extensible than the dough containing SAPP/SAP (Expt. 45). Heat processing of the samples was completed without difficulty.

The bread samples were evaluated for symmetry, crumb grain, texture and flavor preference both after one day and five weeks of storage at 0° and 100° F.

After one day, the breads leavened with GDL and SAPP/SAP were superior to the yeast leavened bread for uniformity of symmetry and crumb grain. For texture and flavor, yeast and GDL samples were superior to the SAPP/SAP sample. For flavor only, yeast was preferred. Between the two chemical leaveners, GDL was preferred because of its over-all superiority in both dough and bread characteristics.

After five weeks of storage there was a marked superiority in crumb softness and mouth feel, with either the yeasted bread samples or the GDL leavened bread, to that obtained with SAPP/SAP. Both of these samples retained acceptable eating characteristics free from crumbliness or off-flavor as was partially exhibited with the SAPP/SAP leavened bread (Experiment 45).

Conclusion: The bread obtained with the synthetic flour formula leavened with yeast was acceptable when fresh and after five weeks for both flavor and textural characteristics. Its only strong negating feature was a lack of uniformity in symmetry and crumb grain.

The bread obtained with the same flour formula, but leavened with GDL, was markedly superior in over-all bread characteristics to that obtained with SAPP/SAP. GDL extended the shelf life of its bread beyond that provided by SAPP/SAP.

The synthetic flour system with GDL was selected as the base formulation in which further tests with other ingredients will be tried.

9. Evaluation of Five Bread Softeners in a Synthetic Flour Formula (Experiments 47-56)

Purpose: To determine the effectiveness of five bread softeners in retarding the rate at which bread stales.

Procedure: Table 4, Experiments 47 through 56, lists the ingredients and illustrates the design of these experiments. To assure uniformity in the distribution of softeners in the doughs, they were first dispersed in part of the water used for

dough absorption. Myverol Type 18-00 (glyceryl monostearate) was used as the control for the softeners in these experiments since most of the development work to date had been done with this product.

Evaluation: Marked differences were detected among the bread samples formulated with the five different softeners. The table below indicates the relative rank of breads containing these softeners after five weeks. The bread quality score in this table indicates the differences among the samples in textural characteristics which were reflected in easier bite and chew when the bread was eaten.

Rank	Experiment No.	Softeners	Bread Quality Score
1st	52	MYVATEX Type 25-00	83
2nd	47	MYVEROL Type 18-00	80
3rd	54	MYRJ 45	78
4th	49	MYVATEX Type 3-50	78
5th	55	PRUV	75

MYVATEX Type 25-00 (monoglyceride emulsifier with non-fat skimmed milk solids, lecithin, sodium propionate and vinegar)* was an experimental laboratory prepared sample provided by Distillation Products Industries. This softener imparted an acetic odor and flavor to bread which made it unacceptable. However, there were no detectable differences in odor or flavor in those bread samples made with the remaining softeners.

Conclusion: The results of these experiments indicated that MYVEROL Type 18-00 (glyceryl monostearate) was the best of the four food grade samples tested as bread softeners.

10. Evaluation of Shortening Levels in a Synthetic Flour Formula (Experiments 57-60)

Purpose: To determine the effect on crumb softness when the shortening level in a synthetic flour formula is increased.

Procedure: The experimental outline is depicted in Table 4. Experiments 57, 58, and 59 contained 4.7, 9.4, and 14.1 parts by weight, respectively, of shortening in a formula that also contained the bread softener, MYVEROL Type 18-00. In Experiment 60, shortening, 14.1 parts by weight, was used in the same formula but without the softener.

Evaluation: There were differences in breads containing varying amounts of shortening, both in flavor and in textural characteristics.

In regard to the former, there was an improvement with an increase in the level of shortening in the bread. The significant flavor improvement was obtained with 9.4 parts by weight of shortening, while the next increment, 14.1 parts by weight, was considered as only a subtle improvement in flavor and not significant.

With respect to textural characteristics, there were two different observations made: On the plus side was an increase in the tenderness of the crumb to bite and chew when eaten, as the level of shortening increased. On the negative side, with that ease of crumb breakdown when chewed, was the marked increase in crumb firmness with the increase in the shortening level. These findings pertained to samples that were evaluated after one day and again after five weeks.

When the level of shortening was 14.1 parts by weight, without the softener in the synthetic flour formula (Expt. 60), the bread, comparatively, was extremely firm and tough to bite, and the textural characteristics were unacceptable; after five weeks. Peroxide values were determined on these samples intermittently over a period of fourteen weeks without any measurable change.

Conclusion: Increasing the amount of shortening in the formulas containing a bread softener crumb softness, but the amount of firmness imparted was not considered significant compared to the marked improvement in bread flavor and tenderness of the crumb. A bread sample containing a high level of shortening without a softener became stale within the same period of time that the samples with softeners were still acceptable.

11. Evaluation of Three Sweeteners in a Synthetic Flour Formula

(Experiments 61-67)

Purpose: To determine the effect of three sweeteners in extending the apparent freshness of bread through the retention of an apparent crumb moistness.

Sorbitol and a fully inverted sugar were used in addition to sucrose which was selected as the control. The first two ingredients are generally recognized as humectants. In that role, they supposedly have the property of holding crystallizable substances such as sucrose in solution or, if used in solution themselves, they display properties of non-crystallization. Sucrose is one of many ingredients in bread that competes for free water in the dough mix and also in the baked product. If in the baked product, for example, a part of the moisture necessary to keep the sugar in solution moves to another ingredient whose attractive force for water is greater than the sugar, the result may be a slow crystallization of the sugar. This same basic phenomenon may occur for other ingredients with relatively strong attractive forces to hold on to their moisture. It is thought that the result of this internal shifting of moisture in the crumb results in a weakening of the structure and the perceptible crumbliness and dryness associated with these changes occur. It was for that reason that these ingredients were tested to determine their effectiveness in extending the apparent freshness of bread.

Procedure: Table 4, Experiments 61 through 67, outlines the experiments. A synthetic flour formula, GDL chemically leavened, was mixed according to the straight dough procedure. The amount of sweeteners in the formulas varied from 5.2 to 2.6 to 1.7 parts by weight, depending on whether they were used along, paired, or all three blended together. All of the experiments were completed according to the concept of a single-stage process.

Evaluation: The dough handling characteristics were good. Processing was completed without difficulty. The bread samples were evaluated for flavor preference and texture both after one day and five weeks of storage. There were no noticeable differences in bread flavor, whether the sweeteners were used in combinations or alone.

The bread made with the fully inverted sugar, 5.2 parts by weight, was superior to bread made with either sorbitol or sucrose for textural characteristics: cohesive mouth feel and easy to bite and chew. There was some improvement in bread made with sorbitol as well as with a combination of sorbitol and invert sugar when compared to samples made with sucrose only.

Conclusion: These experiments indicated that the fully inverted sugar improved the apparent freshness of bread by imparting a more cohesive mouth feel when these samples were eaten.

12. Evaluation of Varying Shortening and Different Sweetener Levels in a Synthetic Flour Formula (Experiments 68-85)

Purpose: Several purposes were intended with the series of experiments outlined in Table 5: (1) to determine the effect of an increase in the level of shortening in a bread formula made up with three different sweeteners; (2) to determine the effect of an increase in the amounts of both the shortening and the sweeteners; and, (3) to determine the effect of an increase in the amount of shortening in a blend of two different sweeteners at different levels.

Procedure: Table 5 shows the bread formulation and general experimental design. It also indicates a change in the flavoring ingredient used in these experiments. This comes as the result of experiments which are reported in the section on the multiple-stage process.

Evaluation: All doughs from these experiments exhibited acceptable dough handling characteristics. There was a normal inclination for some of the doughs to be more soft and extensible with an increase in the level of either the shortening or the sweeteners or both.

a. Varying Shortening Levels with Different Sweeteners (Expts. 68-76)

Two results of these experiments were immediately apparent. One, the improvement in crumb softness when the sugar in the bread formula was changed from sucrose, 5.2 parts, to a fully inverted sugar, 5.2 parts, with shortening at 4.7 parts by weight;

two, the marked improvement in bread flavor with an increase in shortening from 4.7 to 9.4 parts by weight. The next higher level of shortening, 14.1 parts by weight, was not evaluated as being significant in giving additional flavor enhancement to the bread. This flavor enhancement was evident regardless of which sweetener was used in the formula.

When the level of shortening in these experiments was increased to 9.4 and 14.1 parts by weight, there was a slight decrease in crumb softness. This characteristic occurred regardless of which sweetener was used. Still, the relative position for crumb softness by the various sweeteners remained the same: invert sugar, first; sorbitol, second; and sucrose, third.

b. Varying Shortening and Sweetener Levels Together (Experiments 77-80) The results of these experiments tend to substantiate the general character of the evaluation made for those samples discussed under Experiments 68-76. In addition, the increase in sweetener levels to 10.4 parts by weight seemed to arrest, slightly, the noticeable tendency for the high level of shortening to decrease crumb softness.

c. Varying Shortening Levels with a Blend of Two Sweeteners (Experiments 81-85). Table 5, Experiments 81-85, shows the composition of the bread samples containing a blend of invert sugar and sorbitol with the varying levels of shortening in these experiments. The results from blending the two sweeteners was an improvement in crumb softness over that obtained when sorbitol was used alone. However, the blends were not as good as when only the fully inverted sugar was used.

Conclusion: Replacing sucrose with a fully inverted sugar improved the quality of the bread. This was in terms of a softer crumb and a more moist mouth feel. This apparent moistness was obtained without an increase in the moisture content of the crumb, as indicated in the table below:

Sweetener	Experiments No.	Crumb Moisture %
Fully inverted sugar	76 and 80	37
Sucrose	68, 69 and 70	39

Bread flavor improved with the higher level of shortening in the formulas with 9.4 or 14.1 parts by weight.

There was a slight decrease in crumb softness as the level of shortening in the formulas increased. Part of this tendency for the high level of shortening to decrease crumb softness could be compensated for by increasing the level of either the invert sugar or sorbitol.

The best bread samples were obtained when there was a complete replacement of sucrose with the fully inverted sugar. The table below shows that there was not as much of an increase in softness of the bread samples when sorbitol was used either alone or blended with invert sugar compared with sucrose. Therefore, there appears to be no reason for the use of sorbitol in this type of a flour system.

Experiments No.	Sweetener	Bread Quality, 5 weeks
68	Sucrose	80
71	Sorbitol	81
74	Invert sugar	85
81	Invert/Sorbitol	81

The present experiments and experiments 61-67 indicated better antistaling characteristics with the use of a fully inverted sugar than with sucrose. Still, the problem remained in obtaining consistently uniform, symmetrical bread samples which are required for periodic judgment of crumb grain and texture. Bread lacking those characteristics made comparative evaluations of some stored samples more difficult. Since this area of bread improvement occurred near the end of the contract period, it was not felt that sufficient samples had been made since that time and storage tested, to definitely justify a change in the sweetener in the formula. However, any additional work in formulation of this bread product should include experimentation in this area.

Attempts to obtain bread products uniform in volume, symmetry and crumb grain were programmed to occur simultaneously with the experimental efforts. This was

accomplished by minor but continuous adjustments of the controls on the retort to be either more or less sensitive to the flexing of the pouch in the sensing device during heat processing.

13. Evaluation of an Imitation Yeast Flavor and a Home Bread Flavor in a Synthetic Flour Formula (Experiments 86-88)

Purpose: To determine if one of a blend of two flavoring ingredients would better enhance the flavor of the bread.

Improvement in bread flavor has been obtained by testing several ingredients purported to improve the flavor of the baked items. These tests have not always been carried out in a program that permitted continuity in reporting the results. At times they were done in a sequence of experiments in one phase and results were found to be applicable in another. Such prior effort had resulted in the selection of two flavoring ingredients that were found to be superior to others. These two were originally used as a blend in Experiments 129-144 when the possibility developed that one of the flavors might function more effectively than the blend.

Procedure: Table 6, Experiments 86-88, shows the experimental design. The two flavoring ingredients making up the blend are an Imitation Yeast Flavor and a Home Bread Flavor manufactured by Fries and Fries. A total of 2 parts by weight was used in each of the three experiments: the first was a one to one blend of each flavor (Expt. 86); the second was the Imitation Yeast Flavor (Expt. 87); and the third was the Home Bread Flavor (Expt. 88). These were incorporated as part of the dry mix in each synthetic flour formula. A straight dough-mixing procedure was used.

Evaluation: Dough characteristics were good. Bread characteristics also were good for symmetry, crumb grain and textural characteristics. Bread containing the Imitation Yeast Flavor (Expt. 87) was preferred for flavor among the three experiments. The bread containing the blend of two flavors (Expt. 86) was preferred second, and last, but still acceptable in flavor, was the bread made with the Home Bread Flavor (Expt. 88).

Conclusion: The best bread flavor was obtained when the Imitation Yeast Flavor was incorporated into the synthetic flour formula. It was then decided to determine its optimum level of use in a bread formula, which was the purpose for the next series of experiments.

14. Evaluation of Imitation Yeast Flavor at Varying Levels in a Synthetic Flour Formula (Experiments 89-92)

Purpose: To determine the optimum level at which the Imitation Yeast Flavor should be used in a synthetic flour formula.

Procedure: Table 6 shows the bread formula and general experimental design. Zero, 2, 4, and 8 parts by weight of Fries and Fries Imitation Yeast Flavor were incorporated as part of the dry mix in each of the synthetic flour formulas (Experiments 89-92).

Evaluation: Dough handling characteristics were good. Bread exhibited good characteristics for symmetry, crumb grain and texture. The significant improvement in bread flavor was obtained with 2 parts by weight of the Imitation Yeast Flavor. The next two increments (4 and 8 parts by weight) caused a significant darkening of the crumb which was extremely undesirable without an appreciable concomitant of flavor improvement.

Conclusion: From these and other experimental results, the Imitation Yeast Flavor was selected as the flavoring agent for bread-in-pouch production. The level of incorporation in a synthetic flour formula would be 2 parts by weight.

15. Evaluation of Glyceryl Monostearate at Varying Levels in a Synthetic Flour Formula (Experiments 93-95)

Purpose: To determine if an increase in the level of GMS (glyceryl monostearate) would improve the crumb softness of bread made with a synthetic flour formula containing a high level of shortening.

In early exploratory experiments with GMS (Phase I, Report 3: 19-20), it was found that 2 parts by weight was optimum. Exceeding this level resulted in breads that were softer but the textural characteristics were unacceptable because of the

greasy taste and a slippery mouth feel.

The bread formulas currently in use have been changed extensively from those used earlier in this project. However, situations do occur that require a re-evaluation of some of the ingredients that were used in those earlier experiments. The results obtained from Experiments 57-60 indicated that an increase in the level of shortening in a bread formula decreased crumb softness but enhanced the flavor and improved the tenderness of the crumb to bite and chew. The concept behind this present experiment was to increase the level of GMS in the formula in an attempt to decrease the firming-up of the crumb caused by the increase in the level of the shortening. Also, to determine if this can be done without obtaining the undesirable slippery mouth feel noted in the earlier experiments.

Procedure: Table 6 shows the formulas and design of the Experiments 93-95. Three levels of GMS - 2, 3, and 4 parts by weight - were incorporated into the synthetic flour formula which contained 14.1 parts by weight of shortening.

Evaluation: Dough handling characteristics were excellent. Bread was very good for symmetry and crumb grain. Samples were evaluated for textural characteristics after two and fifteen weeks of storage at 0 and 100° F. One was unable to differentiate between levels of GMS in bread as they appeared to be quite similar in textural characteristics. After 15 weeks of storage, the samples were firmer, but were still considered similar in textural characteristics where the cohesiveness of the crumb to chewing was good and the flavor was acceptable.

Conclusion: The level of 2 parts by weight of GMS in the bread formula appeared to be just as effective for sustaining crumb softness and textural characteristics for an extended period of time as when the level of GMS was increased to 3 or 4 parts by weight.

There was not a noticeable change in mouth feel at the higher GMS levels, as was noted in the earlier experiments which were recorded as a "slippery" mouth feel.

16. Evaluation of Chemically Leavened Retarded Doughs for Heat Processing in a Synthetic Flour Formula (Experiment 96)

Purpose: To determine the acceptability of bread samples processed from retarded doughs. Its purpose would be to increase the output of bread production from a process that presently is discontinuous.

Procedure: The synthetic flour formula, chemically leavened with glucono delta lactone, used in this experiment is given in Table 6, Experiment 96. A straight dough mixing procedure was used. Three racks were filled with the sealed pouches and each rack, thereafter, was considered a part of the main experiment. The first rack was retorted immediately; the second rack was refrigerated for three hours at 4.4° C (40°F) and then retorted; and the third rack was refrigerated for seventeen hours and then retorted. Each rack was heat processed at 255° F for 15 minutes.

Evaluation: The bread samples obtained either with immediate retorting or after three hours refrigeration and then retorted were comparable for volume, symmetry, crumb grain and textural characteristics. The pouches of the samples in the rack refrigerated for seventeen hours were pillowed. This was the result of a continuous, but slower rate of bench action even with refrigeration. The bread after retorting was found to be thinner, and consequently firmer to bite and tougher to chew than for either the zero or three hour retarded samples.

Conclusion: Retarding a chemically leavened dough for three hours by refrigeration did not appear to impair the quality of the bread obtained; retarding a similar dough for seventeen hours did. The bread characteristics of the latter sample, in comparison with the former, were considered unacceptable.

B. SINGLE-STAGE PROCESS WITH YEAST LEAVENED BREAD SYSTEMS

1. Evaluation of Conjoined Crystals and Glyceryl Monostearate in Bread Flour (Experiments 97-99)

Purpose: To test the effectiveness of both conjoined crystals [1/]

1/ N.H.Kuhrt, R.A.Broxholm and W.P.Blum, Conjoined Crystals, I and II. JAOCS, 40 (12): 725-733 (Dec. 1963).

(glyceryl monostearate/propylene glycol monostearate) and GMS (glyceryl monostearate) in bread formulated with a bread flour and leavened with yeast. Also, to test the compatibility of a yeast formulation to a single-stage process.

Procedure: Table 7, Experiments 97-99, illustrates the experimental design. With one exception, dough make-up followed the technique outlined in the section on Materials and Methods. The sealed pouches in the racks were maintained at 75° F. for one hour to provide a low temperature proof before heat processing.

Evaluation: Dough handling characteristics during make-up were good. Bread samples were evaluated for symmetry, crumb grain and textural characteristics one day after processing. Symmetry of the breads were not uniform and the crumb grain exhibited thick cell walls with irregular shapes. When fresh, the breads exhibited an intense odor and flavor of yeast, as a result of in-pouch processing. The flavor became milder and more acceptable after one week of storage. The sample containing GMS (Expt. 99) was superior in textural characteristics to the sample containing the conjoined crystals (Expt. 97) which was, in turn, considered no better than the sample without either softener (Expt. 98). After five weeks of storage, the bread samples from all three experiments were stale.

Conclusion: The use of conjoined crystals was not effective in extending the shelf life of pouched bread. Glyceryl monostearate continued to be a superior adjunct for this purpose. Results indicated that with proper make-up and processing, a yeast leavened system would be compatible to a single stage process.

2. Evaluation of Varying Shortening Levels with Yeasted Doughs in Bread Flour and Synthetic Flour Formulas (Experiments 100-105)

Purpose: To determine the effect of varying the shortening levels in a yeast levened bread made with either a bread flour or a synthetic flour formula. In conjunction with this yeast experiment and all experiments, to continue to improve processing techniques and thus obtain a definite improvement in bread characteristics: symmetry and crumb grain.

Procedure: Table 7 shows the formulation and general experimental design. Three levels of shortening, 4.7, 9.4, and 14.1 parts by weight, were incorporated into two different flour systems using a straight dough mixing procedure. Their fermentation schedule is outlined in the section on Materials and Methods.

Evaluation: The dough handling characteristics were excellent and there was also an improvement in bread characteristics. There was more of a detectable change in bread flavor as the shortening level increased from 4.7 to 9.4 parts by weight, than in the next increment of shortening to 14.1 parts by weight. The flavor obtained from increasing the level of shortening in bread was more pronounced in the bread flour than in the synthetic flour sample. In both formulas the flavor was more acceptable with the higher levels, 9.4 or 14.1 parts by weight, than samples formulated with shortening at 4.7. With an increase in the shortening level in bread, there was an increase in crumb firmness but at the same time there was an improvement in crumb tenderness to bite and chew.

The bread samples obtained with the synthetic flour formulation (Expts. 100-102) were superior to those samples obtained with bread flour (Expts. 103-105). The evaluation of these samples was for symmetry, crumb grain and crumb texture. After five weeks of storage at 100° F, the textures of the breads made with the synthetic flour were more resilient and retained a more cohesive structure in the mouth when eaten than did those samples made with bread flour.

Conclusion: The results of these experiments indicated that a better bread product could be obtained with the use of a synthetic flour formula in a yeast leavened system regardless of the level of shortening that was used in that formula. The improvement both in flavor and in crumb tenderness by increasing the level of shortening in the formula outweighed the disadvantage of crumb firmness with the higher shortening level.

3. Evaluation of Yeast Retarded Doughs for Heat Processing in a Synthetic Flour Formula (Experiment 106)

Purpose: To determine if a yeast retarded dough could be heat processed so that the bread obtained would be acceptable for volume, symmetry, crumb grain and textural characteristics. If so, then it would be possible to speed up bread production by maintaining prepared samples for heat processing.

Procedure: The formula used for these experiments is recorded in Table 6, Experiment 106. A single mix, straight dough procedure was used. The three racks were filled with the sealed pouches and they were heat processed as follows: one rack was retorted immediately, the other two racks were refrigerated at 40° F for three hours and seventeen hours before retorting.

Evaluation: The samples whose doughs had received three hours of refrigeration compared favorably for symmetry, crumb grain and textural characteristics with those that had been retorted immediately. Bread samples obtained from doughs retarded for seventeen hours were markedly smaller in volume.

Conclusion: The results of this experiment would indicate that doughs could be retarded up to three hours without impairing the quality of the bread obtained, while the bread obtained from the seventeen hour test was unacceptable. There still remains the area of lower temperature for investigation, if retarding times beyond three hours are required. Retarding does appear to be a feasible method of increasing bread production with a more efficient use of processing equipment.

4. Evaluation of a Continuous Dough System (Experiment 107)

Purpose: To determine the applicability of using a continuous dough system for the production of bread by the single-stage process.

Procedure: A pilot model, continuous dough system was used to obtain a dough for heat processing. First, several long strips of doughs were extruded out onto flat trays before they were cut into shorter lengths. The doughs were inserted into pouches, allowed to proof for 30 minutes, sealed and then retorted.

Evaluation: The results indicated that an acceptable bread product could be obtained. The viscosity of the doughs obtained from the continuous system was much lower than that obtained from any of the other batch type processes for the production of bread. Because of this, the doughs required more careful handling as they were more easily deformed. The odor and flavor of the bread was extremely strong when fresh. After two weeks' storage, the aroma and flavor of the bread was milder. The product was more breadlike for crumb grain and texture and had sustained storage better than those breads obtained from Experiments 97-99).

Conclusion: The continuous dough system seems compatible for production of bread in a pouch using a single stage process. Only a limited number of samples was obtained in the initial effort. This was an area in which additional effort with the use of chemical leaveners and synthetic flour formulas might have been beneficial. However, scheduling and time prevented such efforts. Nevertheless, the indications are that the use of a continuous dough system may have commercial application in the production of bread in the pouch.

C. MULTIPLE-STAGE PROCESS

The multiple-stage process was introduced during Phase II. The object was to apply a multiple stage process to the production of bread in the pouch. This concept was to use a processing procedure in which a dough is first prebaked to obtain the desired shape, then subject the baked, or partially baked bread in its sealed package to the additional heat processing necessary to obtain a sterile product.

In the discussion of the multiple-stage process, frequent references will be made to similar experiments that were completed using the single-stage process. This was done to make it possible to compare the two processes and their products.

1. Evaluation of Three Wheat Glutens in a Synthetic Flour Formula (Experiments 108-110)

Purpose: To determine which of three vital wheat glutens - "Midsol", "Vicrum", or "Vi-Tal" - would contribute less of a gluten flavor to bread. These experiments were similar in formulation and design to those of Experiments 41-43; but while those were single-stage processed, these were multiple-stage processed.

Procedure: Table 8, Experiments 108-110, outlines the experiments. The synthetic flour formulas were chemically leavened with SAPP/SAP. A straight dough, single-mixing procedure was used. The method for handling the doughs after mixing for the multiple-stage process is outlined in the section on Materials and Methods. The doughs were baked at 300° F for 30 minutes. The bread was allowed to cool for 10 minutes, inserted into pouches, sealed, and then retorted.

Evaluation: Dough handling characteristics were good. Processing was completed for the series without difficulty. Crust surfaces of the bread were smooth with a normal brown color. In contrast, the crust surfaces of bread obtained with the single-stage process were pockmarked with a pale straw color. Crumb color was darker with the samples that were pre-processed with a bake and then retorted. The bread samples were evaluated for flavor preference a day after processing by a taste panel consisting of eight people. The "Vi-Tal", acid dispersed wheat gluten (Expt. 108) was judged superior to the other two gluten products (Expts. 109 and 110) by seven of the panel members.

Conclusion: The flavor preference for the acid dispersed wheat gluten, "Vi-Tal", was consistent whether the bread was obtained using the single-stage process (Expt. 41) or the multiple-stage process (Expt. 108). The flavor of gluten was very evident in bread made with the acid dispersed gluten, but it was significantly more acceptable than the two other wheat gluten products.

The flavor of bread obtained with the multiple-stage process was not as good as the bread obtained from the single stage process (Expts. 41-43).

All future experiments in this section of the report using a flour synthetically formulated will have been compounded with "Vi-Tal", the acid dispersed gluten.

2. Evaluation of Low Temperature - Long Time Prebake with Chemical and Yeast Leavened Systems (Experiments 111-122)

Purpose: To determine the baking conditions necessary to obtain a product that would withstand the additional handling necessary in a multiple-stage process.

Procedure: Three leavening systems - SAPP/SAP, GDL, and active yeast - were used in a synthetic flour formula. A straight dough mixing procedure was used with the two chemical leavening systems and a sponge-dough procedure was used with the yeast. From each dough mix a sufficient number of dough pieces - twenty-four - was obtained so that six were immediately pouched and sealed while other groups of six were placed on trays and baked for 10, 20, or 30 minutes at 300° F, cooled and then pouched and sealed. The yeast samples were handled in a similar manner except that the final 30 minutes of proof were done on trays instead of in pouches as indicated in the section in Materials and Methods. Finally, all of the pouched samples were retorted at 250° F for 20 minutes. The experimental design is shown in Table 8. The times and temperatue for baking are given in the following table:

Leavening	Experiment No.			
SAPP/SAP	111	112	113	114
GDL	115	116	117	118
Yeast	119	120	121	122
Minutes of baking at 300° F	0	10	20	30

Evaluation: There were marked differences among bread samples that were retorted without baking and those that were baked and then retorted. Baked samples had darker crumb color and crust surfaces that were smooth; samples that were retorted without baking had lighter crumb and crust surfaces that were pockmarked. These differences occurred whether the bread was produced from a yeast or a chemically leavened dough. Only those samples that were baked for 30 minutes at 300° F.

(Expts. 114, 118, and 122) were acceptable for both external and internal characteristics. A bake time of 20 or 10 minutes resulted in bread that contracted enough during cooling to give the product a misshapen appearance before it was even retorted.

The ranking for flavor preference for the breads retorted without baking were: yeast (Expt. 119) first; GDL (Expt. 115) second; and SAPP/SAP (Expt. 111) last. The flavor preference ranking for breads baked first, 300° F for 30 minutes, and then retorted were: yeast (Expt. 122) first, while similar flavor evaluation was given for both GDL and SAPP/SAP leavened samples (Expts. 118 and 114), respectively. The similarity in bread flavor with the two chemical leaveners may result from the flavor attributed to the browning reaction as the crust color becomes darker with an increase in the bake time plus retorting.

The general symmetry of the optimized baked samples was superior to the samples retorted without baking.

Conclusion: The amount of time and/or temperature given to the dough piece during baking must be sufficient to cause both an expansion and a setting-up of the crumb structure. The conditions of baking for 30 minutes at 300° F seemed to meet these specifications; however, there are undoubtedly many other combinations that would meet the same specifications. The breads that have been processed without baking, regardless of the type of leavening used, were superior in flavor to the best sample obtained by first baking followed with retorting; but the opposite was true for symmetry.

3. Evaluation of High Temperature - Short Time Prebake with Chemical and Yeast Leavened Systems (Experiments 123-128)

Purpose: To determine if the use of a higher temperature, 450° F, for a shorter time, 10 minutes, would give breads equal to or better than those obtained at 300° F for 30 minutes.

Procedure: A bread flour was used in three formulas which were leavened with SAPP/SAP, GDL and yeast as indicated in Table 8, Experiments 123-128. The mixing procedure and handling of these doughs were similar to those used in the

previous series, Experiments 111-122. All doughs were prebaked at either 450° F for 10 minutes or 300° F for 30 minutes. After cooling for 10 minutes the bread was pouched, sealed and then retorted.

Evaluation: Dough handling characteristics were excellent. The bread obtained from these experiments exhibited acceptable symmetry and internal crumb characteristics. The crust color of breads baked at 300° F for 30 minutes was lighter than those baked at 450° F for 10 minutes. The crust colors were influenced by which leavening system was used. When comparing them to yeast, the crumb color was darker with SAPP/SAP and lighter with GDL. The bread samples baked at 450° F exhibited larger bread volumes with thinner crust. There was a significant crumb moisture loss between the single stage process (36.7%) and the multiple stage process baked at 300° F (25.6%) and at 450° F (27.4%); but, between the two multiple-stage processes the crumb moisture loss was only approximately 2%. Flavor preferences were for those samples made with yeast, GDL, and SAPP/SAP, in that order. Flavor preference on the basis of oven temperature us . prior to retorting, was for those samples baked at 450° F. Textural characteristics of breads obtained from either temperature series were poor. The crust of these samples in their non-permeable pouches are in a state of moisture equilibrium with the crumb. The result was a high moisture content of the crust, approximately 26%, which was reflected in a tough to bite and difficult to chew bread product when eaten.

Conclusion: The advantages obtained from baking at a higher temperature for a shorter time, 450° F for 10 minutes, were bread samples with a larger oven spring, better symmetry, thinner crust and an improvement in flavor over those baked for 30 minutes at 300° F. Nevertheless, samples obtained with the multiple-stage process were inferior both in flavor and texture to those obtained with the single stage process.

4. Evaluation of Single and Multiple-Stage Process (Experiments 129-144)

Purpose: To determine the preference for a bread from a series made with a bread flour and a synthetic flour formula, using a chemically leavened and a yeast

leavened system, with and without yeast flavors, in a single and a multiple-stage process.

Procedure: Table 9 illustrates the formulas and general experimental design. Leavening was with GDL (glucono delta lactone) or with compressed yeast. A straight dough procedure was used in all mixing operations. The yeast flavors were used only in the chemically leavened system. They were an inactive dry yeast and a blend of two imitation yeast flavors. They were incorporated in doughs at 2 and 1 parts by weight respectively. The schedule for the procedure used for mixing and make-up are given in the section on Materials and Methods. Doughs to be used in the multiple-stage process were prebaked 10 minutes at 450° F then retorted at 250° for 20 minutes. Bread samples from each experiment were stored at both 0 and 100° F.

Evaluation: All doughs from these experiments exhibited acceptable dough handling characteristics. Superior characteristics for bread symmetry, crumb grain, crumb texture were obtained with the synthetic flour formula, in either the chemically or the yeast leavened system and in either a single or a multiple-stage process. The bread flour system produced acceptable products only when the doughs were yeast fermented and were used in either the single or multiple stage process.

a. Single-Stage: The bread flavor obtained with the blend of the imitation yeast flavors was preferred in both flour formulas in which GDL was used. Chemically leavened bread made with synthetic flour was softer than that made with bread flour, whether evaluated initially or after 5 weeks in the 100° F storage area. Bread obtained from the yeast leavened system was superior in flavor to bread from the chemically leavened system but inferior for symmetry and crumb grain. The yeast leavened samples after five weeks of storage at 100° F. were considered acceptable for odor, flavor and textural characteristics.

b. Multiple-Stage: Bread samples were excellent for symmetry, fair for crumb grain, and poor for textural characteristics. The crust of these samples was thick relative to the cross section of the bread. The impression one received when eating these samples was that they were eating only the crust from a slice of bread.

Therefore, the reason for evaluating the crumb textures as poor was because they were tough to bite and chew. This toughness prevailed with these samples whether the bread was fresh or after an extended storage period.

Conclusion: The multiple-stage process did not produce bread samples that were as acceptable in as many of the desirable bread characteristics as were obtained by using the single stage process. An advantage of the multiple-stage process was the production of bread with excellent and consistent symmetry. Its disadvantages were that the bread was markedly inferior in flavor and crumb texture.

Two factors were responsible for the negative attitude toward the multiple stage process as it was used. One, lower crumb moisture, 31%, as against 40% in bread prepared with the single-stage process; the other was the thicker and tougher crust. The various techniques with varying bake times and/or temperatures in our attempt to decrease the thickness of the crust prior to retorting were not adequate.

The above factors would possibly benefit from infrared or microwave baking techniques. Either of these baking methods would produce a partially baked sample that would benefit from the additional heat processing with the retort. Both of these baking methods were used in the early exploratory phase in this project:

a. Infrared Heating (Phase I, Report 1: 12-13): Thin sheets of doughs were placed below the unit and heated on both sides for 30 seconds. The breads baked in this manner were considerably larger than similar samples baked in an oven at 375° for 30 minutes. The crust that formed was extremely thin and its color was pale. The crumb grain was uniform. The heat penetration from the infrared radiation elements was both deep and rapid in the thin, sheeted dough pieces. The pieces expand so rapidly that the crust does not form soon enough to restrict dough expansion. High temperature infrared radiant baking would be applicable for a rapid, continuous processing line. One could obtain a greater expansion per unit weight of dough in comparison to that obtained by the normal baking procedures at normal baking temperatures, 350 to 450° F.

b. Microwave Heating (Phase I, Report 3: 23-24): A Raytheon Mark V high frequency oven 2450 megacycles, was used to bake samples of bread. The time required to preset the dough by heating was a function of the number or weight of samples in the oven. One sample may require 15 seconds to bake; seven samples may require 70 seconds. The crusts were very thin. Average crumb moisture of these products was 36% as against 28% for bread baked at 300° F for 30 minutes in the conventional manner. Bread volumes were similar to those obtained with the conventional baking method. Although symmetry, crumb texture and crumb grain were acceptable, the crust and crumb color were as white as the original dough piece. Bread flavor and texture were not completely acceptable, being similar to a product that was not completely baked.

From the results of these early, but limited experiments, there remains the possibility that these two methods to pre-cook a dough are technically feasible and certainly compatible with the concept of a multiple-stage process but additional research is required if they are to be considered.

III. CONCLUSIONS

The design and construction of a special steam-water retort provided the means to investigate the parameters that eventually resulted in the development of a white bread type product. Those areas studied encompassed stability, palatability and sterility of the product.

Sterility was readily attained by heat processing the various experimental bread items to a F_0 value of four or greater. Palatability and stability involved a greater degree of difficulty that required substantial experimentation around several variables.

The main areas surveyed were flour types, leavening agents, softeners, anti-staling agents and flavor adjuncts in conjunction with both single and multiple-stage processing variables.

A major improvement was realized when the investigation evolved to the use of a synthetic flour blend made with a high protein flour, a vital wheat gluten, and a waxy maize corn starch, amylopectin. This blend responded to leavening either with yeast or with glucono delta lactone. The result was bread with a marked improvement in stability to storage when compared to bread made with bread flour.

Results using different bread softeners and anti-staling agents indicated that glyceryl monostearate produced a softer bread crumb than three other food grade softeners tested.

A three-fold increase in the level of shortening, 4.7 to 14.1 parts by weight, in the bread formula slightly decreased crumb softness; but the marked improvement in flavor and crumb tenderness outweighed that disadvantage.

A fully inverted sugar seemed to improve the crumb softness when it was used as a replacement for sucrose, but insufficient experimentation with this variable made it necessary to retain the use of sucrose in the formula at this time.

An enhancement of bread flavor in a chemically leavened system was obtained by adding an imitation yeast flavor to the flour formula.

Tests were generally conducted with these same variables in the multiple-stage

processing procedure. The results, however, were never as acceptable as were those from the single stage process.

There were two areas in the multiple-stage process that were investigated and may possibly be of further interest, but conclusions were insufficient because of limited time available for investigations. These involved the use of either the infrared or microwave heating units. Their function was to cause an expansion of dough without the thick crust obtained with the conventional baking method.

The continuous dough system appears to have application to either the single or multiple-stage processing procedure but effort would be required to integrate this process into a total production system. This might be a means to investigate further if large scale production were to become of interest.

IV. ESTIMATES OF COST TO MANUFACTURE 50,000, 100,000, and 150,000 UNITS USING THE SINGLE STAGE PROCESSING METHOD

The estimated cost to manufacture 50,000, 100,000, and 150,000 pouched units was divided into production, equipment and ingredient costs and is given in detail in Tables 10, 11 and 12 respectively. These estimated cost figures were based on a laboratory processing unit with a capacity of 81 pouches per run, and a horizontal pilot unit with a capacity of 640. The estimated total cost per pouch of bread was $0.216 for the former unit and $0.117 for the latter. The equipment cost for production was estimated to be $11,400.00 for the laboratory unit and $56,700.00 for the pilot unit. The formulation, which was used in the production of the required 600 bread samples to be sent to the Natick Laboratories, as stated in the contract, has a cost of $12.30 per hundredweight of the formula, or $0.016 per 60 gram dough piece.

As can be observed from the Tables, the chief costs involved for production of these bread products are labor and packaging. The labor costs are high because the dough must be sheeted, cut, inserted into pouches, and sealed manually at this time. Automation of these steps would reduce the labor cost considerably. Likewise, the packaging cost would decrease if larger quantities are purchased.

TABLE 1. INGREDIENTS USED [1], EXPERIMENTAL DESIGN AND ANALYTICAL ANALYSIS

INGREDIENTS [2] / EXPERIMENT NO.	1	2	3	4	5	6	7	8	9	10	11	12	13	14	15
Flour, Bread	100	100	100	100	100	100	100	100	100						
Flour, High Protein															
VICRUM - Wheat Gluten										35	35	35	35	35	35
Starch, Amylopectin										65	65	65	65	65	65
MYVEROL Type 18-00 [3]		2	2		2	2	2	1	1		2	2		2	2
Glycerol				15	15	15	7.5	7.5	15				15	15	15
SAPP/SAP [4]	6.5	6.5	6.5	6.5	6.5	6.5	6.5	6.5	6.5	6.5	6.5	6.5	6.5	6.5	6.5
Mixing Stages	1	1	2	2'	2"	3	3	3	3	1	1	2	2'	2''	3
Water	66	66	66	50	50	50	58	58	50	80	80	80	65	65	65
F_o Values, calc.	5.9	5.9	8.4	8.4	8.4	7.2	7.6	7.6	6.0	6.9	6.9	5.8	5.8	5.8	5.8
Crumb Moisture, %	44	44	44	30	30	30	34	34	30	42	42	42	35	35	35

1/ Parts by weight

2/ Common ingredients were soda 3.3, salt 0.9, milk solids 5.6, shortening 4.7 and sucrose 5.2, parts by weight

3/ MYVEROL Type 18-00 (Glyceryl Monostearate)

4/ SAPP/SAP - Sodium Acid Pyrophosphate 1.6/Sodium Aluminum Phosphate 4.9, parts by weight

TABLE 2. INGREDIENTS USED [1], EXPERIMENTAL DESIGN AND ANALYTICAL ANALYSIS

INGREDIENTS [2] / EXPERIMENT NO.	16	17	18	19	20	21	22	23	24	25	26	27	28	29
Flour, High Protein							100	100	100	100	85	85	85	85
VICRUM - Wheat Gluten	35	35	35	35	35	35					15	15	15	15
Starch, Amylopectin							25	25	25	25	25	25	25	25
Starch, Amylose	65	65	65	65	65	65								
MYVEROL Type 18-00 [3]		2	2		2	2	2	2	2	2	2	2	2	2
Glycerol				15	15	15			15	15			15	15
SAPP/SAP [4]	6.5	6.5	6.5	6.5	6.5	6.5	6.5	6.5	6.5	6.5	6.5	6.5	6.5	6.5
Mixing Stages	1	1	2	2'	2''	3	1	2	2''	3	1	2	2''	3
Water	125	125	125	115	115	115	90	90	75	75	95	95	80	80
F_o Values, calc.	3.7	3.7	3.7	5.8	5.8	5.8	6.3	6.3	7.5	7.5	7.5	8.0	8.0	8.0
Crumb Moisture, %	52	52	52	46	46	46	41	41	34	34	42	42	36	36

1/ Parts by weight

2/ Common ingredients were soda 3.3, salt 0.9, milk solids 5.6, shortening 4.7 and sucrose 5.2, parts by weight.

3/ MYVEROL Type 18-00 (Glyceryl Monostearate)

4/ SAPP/SAP - Sodium Acid Pyrophosphate 1.6/Sodium Aluminum Phosphate 4.9, parts by weight

TABLE 3. INGREDIENTS USED 1/, EXPERIMENTAL DESIGN AND ANALYTICAL ANALYSES

INGREDIENTS / EXPERIMENT NO.	30	31	32	33	34	35	36	37	38	39	40	41	42	43	44	45	46
Flour, Bread	100	100	100	100	100												
BEEVO - High Protein Flour						100	100	100	85	85	85	85	85	85	85	85	85
VICRUM - Wheat Gluten									15	15	15			15			
MIDSOL - Wheat Gluten													15				
VI-TAL - Wheat Gluten												15			15	15	15
Amylopectin						25	25	25	25	25	25	25	25	25	25	25	25
MYVEROL Type 18-00 2/	2	2	2	2	2	2	2	2	2	2	2	2	2	2	2	2	2
SAPP/SAP 3/	6.5	6.5	6.5	6.5	6.5	6.5	6.5	6.5	6.5	6.5	6.5	6.5	6.5	6.5			6.5
Glucono Delta Lactone 4/																8.7	
Yeast, Active 5/	2 6/														2		
Yeast, Inactive - Red Star				2	4			4			4						
Yeast, Inactive - VICO-400B			2				2			2							
Mixing Stages	1	1	1	1	1	1	1	1	1	1	1	1	1	1	2	1	1
Water	68	66	67	67	68	90	91	92	100	101	102	90	90	90	93	90	85
F_o Values, calc.	6.4	6.1	6.1	6.1	5.0	7.8	7.8	7.8	8.9	5.0	5.0						
Crumb Moisture, %	45	44	44	44	45	41	41	40	41	41	38						

1/ Parts by weight

2/ MYVEROL Type 18-00 (Glyceryl Monostearate)

3/ SAPP/SAP - Sodium Acid Pyrophosphate 1.6/Sodium Aluminum Phosphate 4.9: Common ingredients in this system were soda 3.3, salt 0.9, milk solids 5.6, shortening 4.7, and sucrose 5.2, parts by weight

4/ Gluconc Delta Lactone: Common ingredients in this system were soda 3.3, salt 0.9, milk solids 5.6, shortening 4.7 and sucrose 5.2, parts by weight

5/ Yeast, Active: Common ingredients in this system were yeast food 0.5, salt 2.0 and milk solids 3.0, shortening 3.0 and sucrose 5.0, parts by weight

6/ Yeast, Active: Used as a flavoring agent.

TABLE 4. INGREDIENTS USED [1], EXPERIMENTAL DESIGN AND ANALYTICAL ANALYSES

INGREDIENTS [2]	EXPERIMENT NO. 47	48	49	50	51	52	53	54	55	56	57	58	59	60	61	62	63	64	65	66	67
Flour B-V-A [3]	125	125	125	125	125	125	125	125	125	125	125	125	125	125	125	125	125	125	125	125	125
MYVEROL Type 18-00 [4]	2										2	2	2		2	2	2	2	2	2	2
MYVATEX Type 3-50 [5]		2	4																		
MYVATEX Type 25-00 [6]				0.5	1	2															
MYRJ 45 [7]							1	2													
PRUV [8]									0.5	1											
Shortening	4.7	4.7	4.7	4.7	4.7	4.7	4.7	4.7	4.7	4.7	4.7	9.4	14.1	14.1	4.7	4.7	4.7	4.7	4.7	4.7	4.7
Sucrose	5.2	5.2	5.2	5.2	5.2	5.2	5.2	5.2	5.2	5.2	5.2	5.2	5.2	5.2	5.2			2.6	2.6		1.7
Sorbitol																5.2			2.6	2.6	1.7
Invert Sugar																	5.2	2.6		2.6	1.7
Crumb Moisture,%	39										39	38	40		42	38	39	40	39	40	40
Storage Temp. and Bread Quality Score [9] 0°F	88	87	90	85	85	87	90	87	85	85	88	90	87	80	87	87	89	85	87	90	87
Bread Quality Score [9] After 5 Wks 100°F	80	76	78	74	77	83	77	78	78	72	80	79	77	70	78	80	82	79	79	80	80

[1] Parts by weight

[2] Common ingredients were glucono delta lactone 8.7, soda 3.3, salt 0.9, milk solids 5.6, imitation yeast flavor 0.5, home bread flavor 0.5 and water 90.0, parts by weight

[3] Flour, B-V-A
- BEEVO -- High Protein Flour --------- 85
- VI-TAL -- Wheat Gluten ---------- 15
- AMIOCA -- Amylopectin Starch -------- 25

[4] MYVEROL Type 18-00 (Glycerol Monstearate)

[5] MYVATEX Type 3-50 (Glycerol Monostearate/Propylene Glycol Monostearate)

[6] MYVATEX Type 25-00 (Monoglyceride w/Non-Fat Skimmed Milk Solids, Sodium Propionate, Lecithin and Vinegar)

[7] MYRJ 45 [Polyoxyethylene (8) Stearate]

[8] PRUV (Sodium Stearyl Fumarate)

[9] Bread Quality Score does not include flavor evaluation since this is considered somewhat subjective depending upon personal preference.

TABLE 5. INGREDIENTS USED 1/, EXPERIMENTAL DESIGN AND ANALYTICAL ANALYSES

INGREDIENTS 2/	EXPERIMENT No. 68	69	70	71	72	73	74	75	76	77	78	79	80	81	82	83	84	85
Flour, B-V-A 3/	125	125	125	125	125	125	125	125	125	125	125	125	125	125	125	125	125	125
Shortening	4.7	9.4	14.1	4.7	9.4	14.1	4.7	9.4	14.1	9.4	14.1	9.4	14.1	4.7	9.4	14.1	9.4	14.1
Sucrose	5.2	5.2	5.2															
Sorbitol				5.2	5.2	5.2				10.4	10.4			2.6	2.6	2.6	5.2	5.2
Invert Sugar							5.2	5.2	5.2			10.4	10.4	2.6	2.6	2.6	5.2	5.2
Imitation Yeast Flavor	0.5	0.5	0.5	0.5	1	1	0.5	1	1	1	1	1	1	0.5	1	1	1	1
Home Bread Flavor	0.5	0.5	0.5	0.5	1	1	0.5	1	1	1	1	1	1	0.5	1	1	1	1
Crumb Moisture,%	39	38	40			38			37		38		37			38		38
Storage Temp. and 0°F. Bread Quality Score 4/	87	90	87	86	86	84	88	86	86	86	87	87	87	85	85	81	87	85
After 5 Wks 100°F.	80	79	77	81	80	78	85	82	77	80	79	83	79	81	78	77	80	78

1/ Parts by weight

2/ Common ingredients were glucono delta lactone 8.7, soda 3.3, glyceryl monostearate 2.0, salt 0.9, milk solids 5.6 and water 90.0, parts by weight

3/ Flour, B-V-A
- BEEVO -- High Protein Flour --- 85
- VI-TAL -- Wheat Gluten -------- 15
- AMIOCA -- Amylopectin Starch -- 25

4/ Bread Quality Score does not include flavor evaluation since this is considered somewhat subjective depending upon personal preference.

TABLE 6. INGREDIENTS USED [1], EXPERIMENTAL DESIGN AND ANALYTICAL ANALYSES

INGREDIENTS [2]	EXPERIMENT NO.	86	87	88	89	90	91	92	93	94	95	96
Flour, B-V-A [3]		125	125	125	125	125	125	125	125	125	125	125
MYVEROL Type 18-00 [4]		2	2	2	2	2	2	2	2	3	4	2
Imitation Yeast Flavor		1	2			2	4	8	2	2	2	2
Home Bread Flavor		1		2								
F_o Values, calc.				8.8	8.5	9.3			8.0			9.3
Crumb Moisture, %		38	39	38	40			37		40	39	
Storage Temp. and Bread Quality Score [5], After 5 Weeks	0°F	92	93	92	92	90	88	90	90	92	89	91
	100°F	79	77	80	76	77	76	75	80	78	78	79

1/ Parts by weight

2/ Common ingredients were glucono delta lactone 8.7, soda 3.3, salt 0.9, milk solids 5.6, shortening 14.1, sucrose 10.4 and water 90.0, parts by weight

3/ Flour, B-V-A
- BEEVO --- High Protein Flour ------- 85
- VI-TAL --- Wheat Gluten ---------- 15
- AMIOCA --- Amylopectin Starch ------- 25

4/ MYVEROL Type 18-00 (Glyceryl Monostearate)

5/ Bread Quality Score does not include flavor evaluation since this is considered somewhat subjective depending upon personal preference.

TABLE 7. INGREDIENTS USED [1], EXPERIMENTAL DESIGN AND ANALYTICAL ANALYSES

INGREDIENTS [2]	EXPERIMENT NO.	97	98	99	100	101	102	103	104	105	106	107
Flour, Bread		100	100	100				100	100	100		100
Flour, B-V-A [3]					125	125	125				125	
MYVEROL Type 18-00 [4]				2	2	2	2	2	2	2	2	
Conjoined Crystals [5]		2										
Shortening		3	3	3	4.7	9.4	14.1	4.7	9.4	14.1	14.1	
Sucrose		5	5	5	5	5	5	5	5	5	10.4	
Mixing Stages		2 [6]	2 [6]	2 [6]	1	1	1	1	1	1	1	
Water		68	66	68	92	92	92	62	62	62	92	
F_0 Values, calc.		5.1		5.5								5.9
Crumb Moisture, %		43										46
Storage Temp. and Bread Quality Score [7], After 5 Weeks	0°F	83	80	85	92	92	85	87	77	80	89	87
	100°F	55	55	65	80	77	72	75	75	70	77	72

1/ Parts by weight

2/ Common ingredients were compressed active yeast 2.0, arkady yeast food 0.5, salt 2.0, and milk solids 3.0, parts by weight

3/ Flour, B-V-A
- BEEVO --- High Protein Flour --------- 85
- VI-TAL --- Wheat Gluten ---------- 15
- AMIOCA --- Amylopectin Starch --------- 25

4/ MYVEROL Type 18-00 (Glycerol Monostearate)

5/ Conjoined Crystals: glyceryl monostearate/propylene glycol monostearate

6/ Refers to a sponge and dough mixing procedure

7/ Bread Quality Score does not include flavor evaluation since this is considered womewhat subjective depending upon personal preference.

TABLE 8. INGREDIENTS USED 1/, EXPERIMENTAL DESIGN AND ANALYTICAL ANALYSES

INGREDIENTS	EXPERIMENT NO. 108	109	110	111	112	113	114	115	116	117	118	119	120	121	122	123	124	125	126	127	128
Flour, Bread																100	100	100	100	100	100
BEEVO - High Protein Flour	85	85	85	85	85	85	85	85	85	85	85	85	85	85	85						
VI-TAL - Wheat Gluten	15			15	15	15	15	15	15	15	15	15	15	15	15						
MIDSOL - Wheat Gluten		15																			
VICRUM - Wheat Gluten			15																		
Amylopectin	25	25	25	25	25	25	25	25	25	25	25	25	25	25	25						
Glucono Delta Lactone 2/								8.7	8.7	8.7	8.7							8.7	8.7		
SAPP/SAP 2/	6.5	6.5	6.5	6.5	6.5	6.5	6.5									6.5	6.5				
Yeast, Active 3/												2	2	2	2					2	2
Water	90	95	95	90	90	90	90	85	85	85	85	92	92	92	92	68	68	60	60	62	62
SINGLE-STAGE PROCESS				*				*				*									
MULTI- STAGE PROCESS	*	*	*		*	*	*		*	*	*		*	*	*	*	*	*	*	*	*

1/ Parts by weight

2/ Glucono Delta Lactone or SAPP/SAP: Common ingredients in either leavening system were soda 3.3, salt 0.9, milk solids 5.6, shortening 4.7 and sugar 5.2, parts by weight

3/ Yeast, Active: Common ingredients in this system were yeast food 0.5, salt 2.0, sugar 5.0, milk solids 3.0 and shortening 3.0, parts by weight.

TABLE 9. INGREDIENTS USED 1/, EXPERIMENTAL DESIGN AND ANALYTICAL ANALYSES

INGREDIENTS / EXPERIMENT NO.	129	130	131	132	133	134	135	136	137	138	139	140	141	142	143	144
Flour, Bread				100	100	100				100	100	100		100		100
Flour, B-V-A 2/	125	125	125				125	125	125				125		125	
Glucono Delta Lactone 3/	8.7	8.7	8.7	8.7	8.7	8.7	8.7	8.7	8.7	8.7	8.7	8.7				
Yeast, Active 4/													2	2	2	2
Yeast Flavor 5/		1			1			1			1					
Yeast, Inactive Dry			2			2			2			2				
Water	90	90	90	58	58	58	90	90	90	57	57	57	92	62	92	62
Crumb Moisture, %	40			37			31			24			44	43	41	37
SINGLE-STAGE PROCESS	*	*	*	*	*	*							*	*		
MULTI-STAGE PROCESS							*	*	*	*	*	*			*	*

1/ Parts by weight

2/ Flour, B-V-A
- BEEVO --- High Protein Flour -------- 85
- VI-TAL --- Wheat Gluten ---------- 15
- AMIOCA --- Amylopectin Starch -------- 25

3/ Glucono Delta Lactone: Common ingredients in this system were soda 3.3, salt 0.9, milk solids 5.6, shortening 4.7, sugar 5.2, and glyceryl monostearate 2.0, parts by weight

4/ Yeast, Active: Common ingredients in this system were yeast food 0.5, salt 2.0, sugar 5.0, milk solids 3.0, shortening 3.0 and glyceryl monostearate 2.0, parts by weight

5/ Yeast Flavor: A blend of 1 part Imitation Yeast Flavor and 3 parts Home Bread Flavor

TABLE 10. PRODUCTION AND COST ESTIMATES FOR SINGLE-STAGE PROCESSED POUCHED BREAD--DISCONTINUOUS SYSTEM

CAPACITY	LABORATORY UNIT	HORIZONTAL PILOT UNIT 1/
CAPACITY:		
Per Run	81	640
Per Day (4 runs) 2/	324	2560
Per Year (250 days)	81,000	640,000
TIME TO PRODUCE: 3/		
50,000 Units	7 months	20 Days
100,000 Units	14 months	40 Days
150,000 Units	21 months	60 Days
PRODUCTION COST PER POUCH:		
Ingredient Cost	$0.016	$0.016
Equipment Amortization, 5 yrs. @ 6%	0.016	.009
Utilities	.001	.001
Labor	.143	.051
Packaging	.040	.040
TOTAL COST	$0.216	$0.117

1/ A horizontal retort with racks inserted on a roll-in cart

2/ Eight hour day

3/ Twenty-two working days per month

TABLE 11. COST ESTIMATES OF EQUIPMENT FOR SINGLE STAGE PROCESSING UNITS

EQUIPMENT	LABORATORY UNIT	HORIZONTAL PILOT UNIT
Mixer	$ 300 (10 lbs/hr)	$ 800. (80 lbs/hr)
Scale	300	500
Ingredient Handling Equipment	200	1000
Dough Troughs	-	500
Sheeter and Cutter	1000 (100/hr)	10,000 (800/hr)
Conveyor & Pouch Loading Stations	200	300
Racks or Trays	100	500
Sealer, Pouch	300	500
Hoist with Track	200	-
150°F Water Tank	300 (60 gal)	800 (450 gal)
Water Pump	300 (25 gpm)	400 (100 gpm)
Retort with heat exchanger and agitator	700	-
Sterilizer, American Sterilizer Co., 24" x 36" x 60" with Heat Exchanger and Pump		11,000
Cart for Sterilizer	-	2000
Automatic Controls	2500	2500
Packing Table	200	500
Case Sealer	-	500
Steam Boiler	1000	6000
Equipment Totals	7600	37800
Installation	3800	18900
TOTALS	$11,400	$56,700

TABLE 12. COST ESTIMATE OF INGREDIENTS FOR A SYNTHETIC BREAD FORMULA USED FOR SINGLE STAGE PROCESSING

	Parts By Weight, Lbs	Percentage Composition	Ingredient Cost/Cwt.*	Formula Cost/Cwt.*
BEEVO - High Protein Flour	85.0	33.0	$ 9.31	$3.07
VI-TAL - Wheat Gluten	15.0	5.8	28.00	1.62
AMIOCA - Amylopectin	25.0	9.7	18.15	1.76
Sucrose	10.4	4.0	9.10	.36
Glucono Delta Lactone	8.7	3.4	54.00	1.84
Soda	3.3	1.3	3.30	.04
Salt	0.9	0.3	1.90	.01
Milk Solids Non-Fat Skim	5.6	2.2	13.75	.30
Imitation Yeast Flavor	2.0	0.8	76.00	.06
Shortening	9.4	3.7	9.75	.36
Glyceryl Monostearate	2.0	0.8	36.00	2.88
Water (variable)	(90.0)	(35.0)	—	—
TOTAL	257.3	100.0	—	$12.30

$$\text{Ingredient Cost Per Pouch} = \frac{(\$12.30)\ (60\ ^{1/})}{(\ 100\ )\ (\ 454\ )}$$

$$= \$0.016$$

1/ Average weight of dough piece per pouch

* Cost per hundredweight

TABLE 13. CALCULATION OF STERILIZATION VALUES

F_o = 6.0 at 250°F. for 20 minutes (Expt. 9)

Time Min.	Retort Temp. °F.	Retort Pressure psig	Bread Temp. °F.	Bread Avg. Temp. °F.	Average Lethal Rate x 2.5 min.		ΣF_o
0	75	0					
	97	0					
5	113	0					
	127	2					
10	142	4					
	155	6					
15	166	6					
	180	8					
20	190	11					
	201	13					
25	210	16	200	200.0	.002	.0050	.0050
	218	17	208	204.0	.003	.0075	.0125
30	228	19	218	211.0	.007	.0175	.0300
	235	21	225	218.0	.017	.0425	.0725
35	242	24	232	225.0	.041	.1025	.1750
	250	26	240	232.5	.107	.2675	.4425
40	250	26	241	236.8	.190	.4750	.9175
	251	26	241	238.9	.246	.6150	1.5325
45	251	26	241	239.9	.278	.6950	2.2275
	251	27	241	240.4	.297	.7425	2.9700
50	251	27	241	240.7	.306	.7650	3.7350
	251	27	241	240.9	.316	.7900	4.5250
55	246	27	238	239.4	.261	.6525	5.1775
	236	26	233	236.2	.167	.4175	5.5950
60	221	25	230	233.1	.114	.2850	5.8800
	206	21	220	226.6	.052	.1300	6.0100
65	183	16	195	210.8	.007	.0175	6.0275
70	175	12	183	196.9			

TABLE 14. CALCULATION OF STERILIZATION VALUES

F_o = 8.5 at 255°F. for 15 minutes (Expt. 89)

Time Min.	Retort Temp. °F.	Retort Pressure psig	Bread Temp. °F.	Bread Avg. Temp. °F.	Average Lethal Rate x 2.5 min.		$\sum F_o$
0	67	0					
	81	0					
5	92	2					
	109	3					
10	128	4					
	142	7					
15	157	8					
	172	10					
20	185	12					
	202	14					
25	218	18	200	200.0	.002	.0050	.0050
	233	21	220	210.0	.006	.0150	.0200
30	245	22	231	220.5	.024	.0600	.0800
	254	25	241	230.8	.088	.2200	.3000
35	255	26	246	238.4	.230	.5750	.8750
	255	26	246	242.2	.371	.9275	1.8025
40	255	26	246	244.1	.464	1.1600	2.9625
	254	26	246	245.0	.527	1.3175	4.2800
45	254	26	246	245.5	.562	1.4050	5.6850
	254	27	246	245.8	.581	1.4525	7.1375
50	241	23	238	241.8	.348	.8700	8.0075
	226	23	227	234.4	.138	.3450	8.3525
55	213	21	217	225.7	.046	.1150	8.4675
	202	18	205	215.3	.011	.0275	8.4950
60	190	14	195	206.1	.004	.0100	8.5050
	181	11	189	197.5			
65							
70							

RETORT DESIGN AND DESCRIPTION

As can be seen in Figure 1, there is provided a retort 10 consisting of a vertically disposed cylindrical steel tank having a side wall 12, a bottom wall 14 and a removable cover 16, which is held in place during operation by means of retainers such as screws 18 which are threaded at 19 within brackets 20, which are mounted circumferentially on the upper end of the retort 10. By placing the fasteners 18 in position and turning the handles at their upper ends, cover 16 can be securely locked and positioned. The retort 10 is provided with a pressure gauge 22, a pressure release valve 24, both of which are connected to the cover 16. A duct or pipe 26 is provided for supplying a pressurizing medium such as air to the upper end of the tank. Connected to the pipe 26 is a pipe 28 having a pressure control valve 30, which is regulated by means of air or other medium supplied through a pipe 32. Also connected to duct 26 is a safety valve 29. Air or other gas or fluid medium is supplied to the valve 30 through a pipe 34 from a source of fluid under pressure 36. The retort 10 includes an opening 38 having a pipe 40 connected thereto to the end of which is fastened a glass window 42 which serves as an inspection report.

Within the retort 10 is a support means comprising horizontally disposed angle irons 44 (Figure 1). Extending upwardly from the horizontal angle irons 44 are four equally spaced parallel angle irons 46 (Figure 2) which serve as guides for three supporting racks 48. The racks 48 each includes a plurality of horizontally disposed frame members such as rectangular bars 50 and a plurality of vertically disposed bars 52 welded or otherwise secured to the bars 50. The bars 50 and 52 are properly spaced to provide a compartment 54 within which the packages 56 containing the food to be cooked are placed.

In the bottom of the tank 10 below the support 44 is a heat supply means such as a heat exchanger 57 formed from a helically wound tube to which a suitable heating fluid such as steam is supplied through a line 58. Control of the steam entering line 58 is provided by means of an inlet control valve 60 and a coolant return valve 66. The opposite end of the exchanger 57 is connected to a line 64 coupled to an outlet control

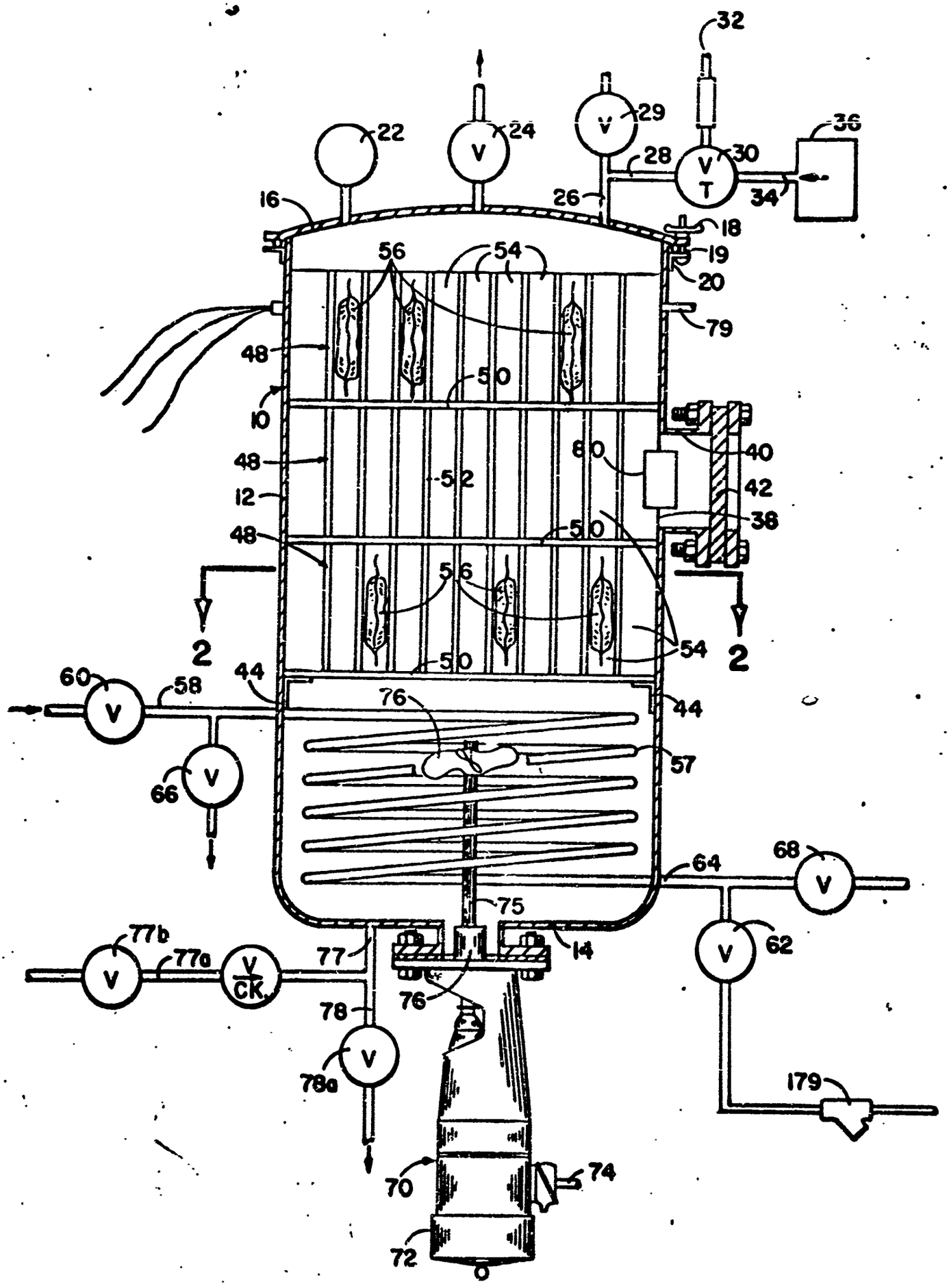
32
22
24
29
36
28
30
34
26
16
18
19
20
56
54
79
48
50
10
40
80
42
12
52
38
2
2
60
58
44
76
57
66
64
68
75
77b
77a
77
14
62
78
76
78a
179
70
74
72

FIG. 1

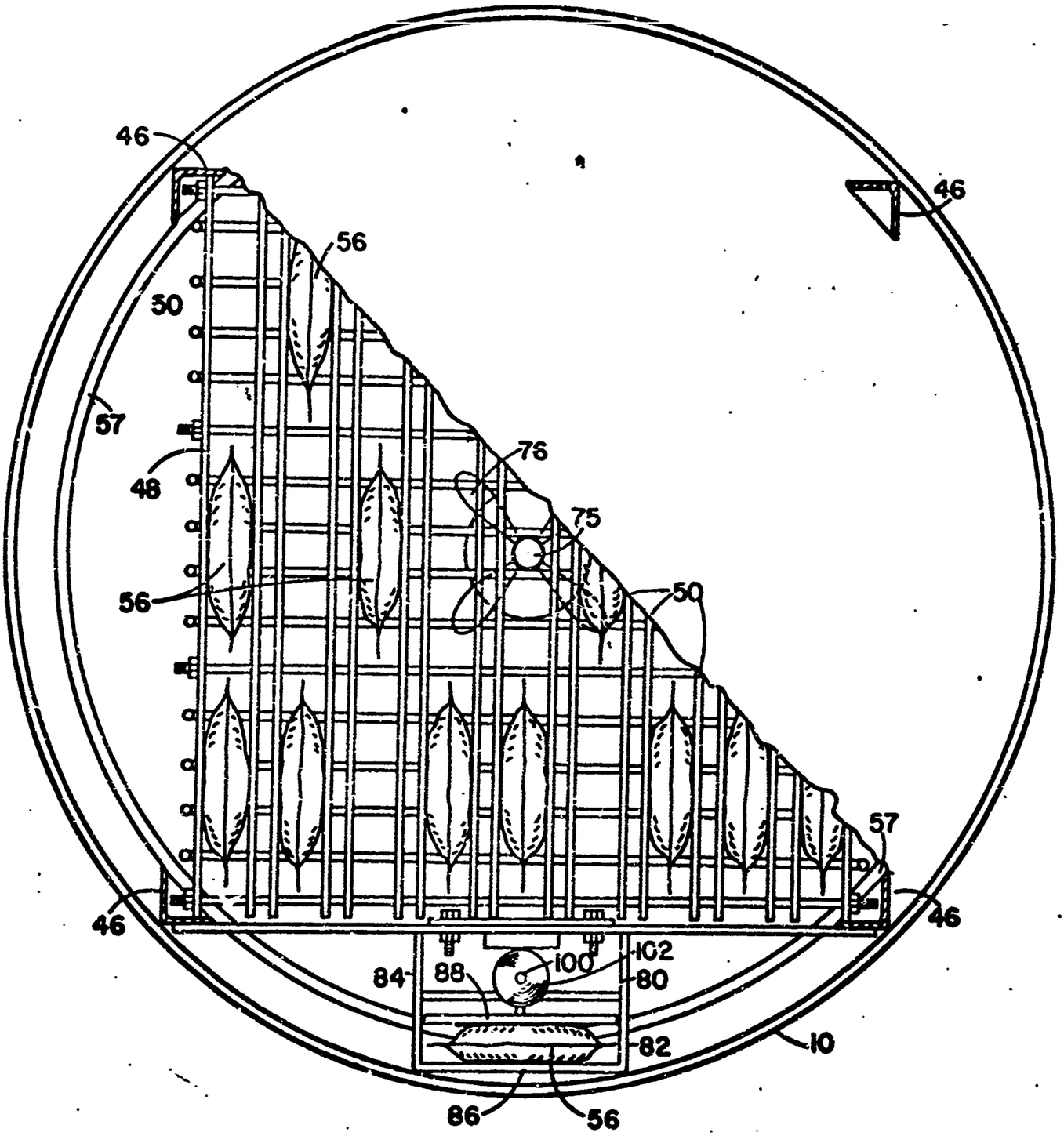

FIG. 2

valve 62 and a cooling water inlet valve 68. At the bottom of the tank 10 is provided a circulating means for carrying a heat transfer medium such as water with which the tank is filled throughout the entire tank. The circulating means indicated generally at 70 comprises a motor 72 to which current is supplied through conductors 74. The shaft 75 of the motor 70 extends upwardly through a rotary sealed 76 and has secured to its upward end, a water circulating propeller 76. It will thus be readily seen that during operation the motor will impart circulating movement to the heat transfer medium within the tank 10.

Figures 3 and 4 illustrate a preferred form of pressure-sensing apparatus in accordance with the invention. As is clearly shown, the sensor comprises a cage or holder 80 which is open at its upward end and includes three vertically disposed and mutually perpendicular sidewalls 82, 84 and 86. The cage also includes a hinged wall 88 which is mounted for a pivoting movement around hinge 87. During operation, one of the packets 56 in all respects similar to the packets 56 placed within the racks 48 is mounted in the cage 80, between hinged wall 88 and rigid wall 86. Connected to the hinged wall 88 is a horizontally extending arm 92. Pivotally connected to arm 92 is an L-shaped link 94 which is supported at its center upon a pivot 96. Extending upward from the horizontal arm of link 94 is a non-ferrous rod 100 which is slidably mounted within a vertically disposed vertically bored guide 102 in the support bracket 104. At the upward end of the rod 100 is a ferrous rod 103. At the upward end of Rod 103 is a depression 103a within which rests an extension 105a at the lower end of a rod 105 formed from a non-ferrous material. Integral with bracket 104 is a linear variable differential transformer 180 to be described herein below. Mounted upon the upper end of rod 105 is a weight 106 which serves as a means for yieldably biasing the wall 88 and package 56 toward a compressed condition. In operation, expansion or contraction of the package 56 within the cage 80 will cause an upward or downward movement of the pin 100, rod 105 and weight 106. The movement of the rod 105 is in turn transmitted as an electric signal through conductors 111.

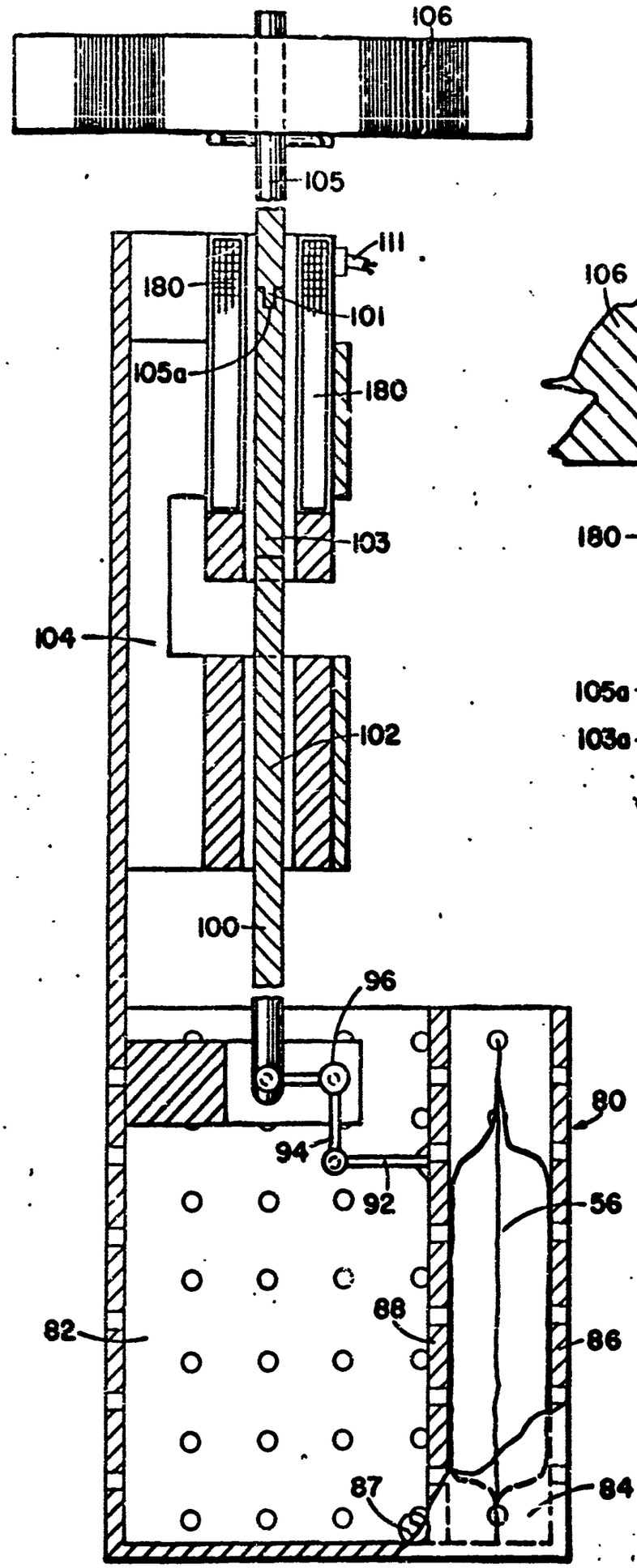
106
105
111
180
101
105a
180
103
104
102
100
96
94
92
80
56
82
88
86
87
84

FIG. 3

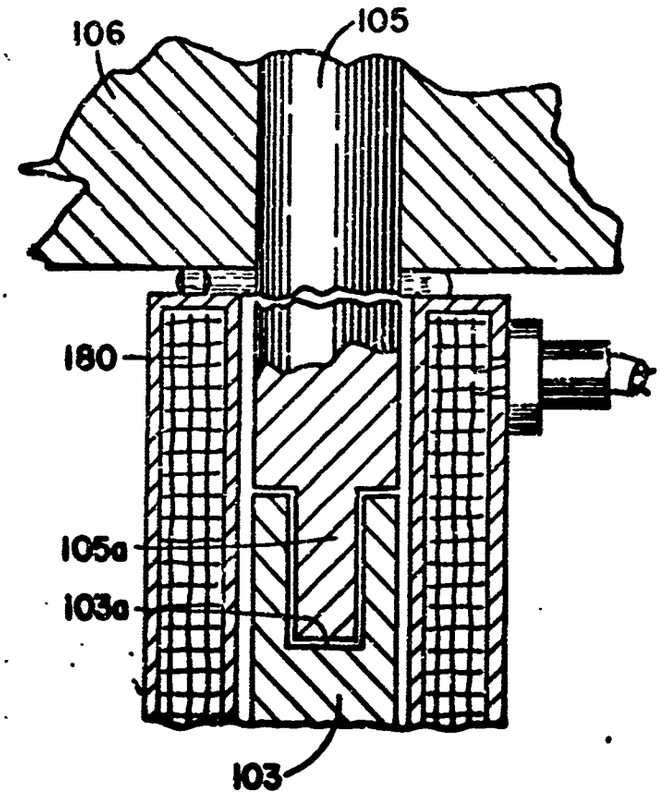
106
105
180
105a
103a
103

FIG. 4

Refer now to Figure 5 which illustrates a preferred form of control in accordance with the invention. In Figure 5 there is shown temperature controller 120 of any suitable and commercially available type such as a Taylor Instrument Company Ful-flex controller manufactured by the Taylor Instrument Company of Rochester, New York. Electric power is supplied to the controller through conductors 122 and 124 from a commercial power source depicted by lines 126 and 128. A double pole circuit breaker 130 is provided in lines 126 and 128. Connected across lines 122 and 124 is a first pair of solenoids 134 and 136 which are integrally housed and connected with normally closed valves 60 and 62. The second pair of solenoids 138 and 140 are wired across lines 122 and 124 and are integrally housed and connected with normally open valves 66 and 68. When no potential is present across lines 122 and 124, valves 60 and 62 will be closed. Under the same conditions, valves 66 and 68 will be open. It can readily be seen then that when the potential is established between lines 122 and 124, and contact 125 is closed and contact 127 open, the operation of solenoids 134 through 140 will open valve 60 and 62, and will close valve 68 and 66.

Any of various temperature controllers can be provided at 120. A preferred controller is of the pneumatic type. Accordingly, a source of pressurized air 150 is connected to a shut-off valve 152 through an air filter 154, a pressure regulator 156 of suitable known construction and line 158 to provide the electrically operated temperature controller 120 with the air necessary for operation. Temperature information is supplied from the cooker 10 by the provision of a sensing unit 160 which is connected to the controller by means of an electrical conductor 162. A preferred sensing unit is the filled bulb type.

One method for cooling the retort will now be described. A cooling medium such as refrigerated water close to its freezing point can, if desired, be introduced to the tank 10 through a line 77 (Figure 1). The water cooling medium is fed to line 77 through a line 77a to which is connected a manual shut-off valve 77b. Also connected to the line 77 is a drain line 78 having a manual shut-off valve 78a which can be opened to drain the tank 10 when required. Thus, by opening the valve 77b, a cooling medium

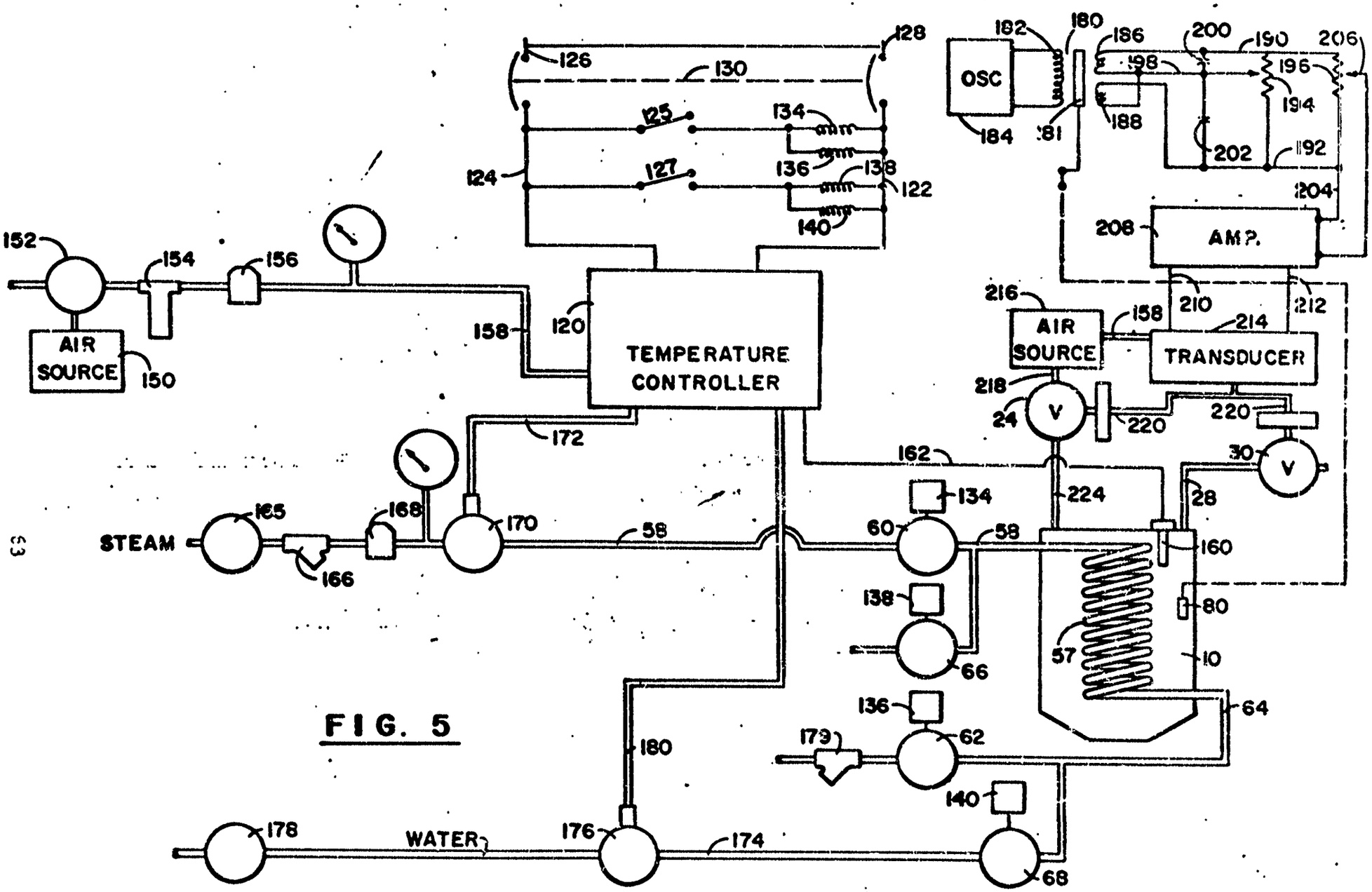
TEMPERATURE CONTROLLER
AIR SOURCE
AIR SOURCE
TRANSDUCER
AMP.
OSC
STEAM
WATER
V
V

FIG. 5

such as cold water is introduced into the tank 10. The hot water within the tank passes out through the overflow line 79. Cooling can also be accomplished by an alternative procedure which will now be described.

When the heating cycle is complete and it is desired to cool the product in the retort 10, for subsequent removal, the manual switch on controller 120 is turned to the "cooling" position (Figure 5). This action results in solenoids 134 and 136 being de-energized causing valves 60 and 62 to close and solenoids 138 and 140 to be energized, causing valves 66 and 68 to open. The control valve 176 is suitably connected to controller 120 and will control the amount of cooling water flowing in coil 57 to cool the heat transfer medium in retort 10, in accordance with the rate set on controller 120.

As mentioned herein above, steam is fed to a steam inlet line 58 from a suitable boiler (not shown) through a manual shut-off valve 165, a strainer and blow-off device 166, pressure reducing valve 168 and air operated steam control valve 170. Valve 170 is connected to the temperature controller by means of compressed air lines 172. Thus, during operation, the air pressure provided through the line 172 will control the steam flow through the valve 170 into the coil 57. As the steam enters the coil 57, it will condense and the water thus formed will be expelled through the line 64 and valve 62 and steam trap 179 to a drain. The cooling valve 176 is suitably connected to the controller as by means of an air line 180. Thus, changes in the air pressure within line 180 as called for by the controller 120 will cause corresponding changes in the extent to which the valve 176 opens.

The heating and cooling rate of the retort 10 in accordance with the invention can be varied by a temperature controller 120 which will allow the temperature to be raised from between about 0.5°F. and 8.0°F. per minute was found satisfactory. Generally, for the purposes of the invention, a rise in temperature of about 4 to 6 degrees per minute during the initial heating is preferred within the retort 10. The controller 120 can also be provided with a hold period during the intermediate portions of the cooking cycle and a final cooling stage in the cycle during which the cooling rate can be regulated between about a 0.5°F. and 8.0°F. per minute.

Reference should now be made to Figure 6 in which the water temperature and inside package temperature are plotted against time. As can be clearly seen in the figure, the water temperature is at all times slightly above the inside package temperature during the heating portion of the cycle, that is to say, the left hand portion of the graph in which the temperature is rising. After the temperature within the package has risen to the desired peak temperature as, for example, about 250°F., the heating is interrupted and the tank is rapidly cooled herein above thus causing the water temperature and inside package temperature to drop as shown at the right in the figure.

The pressure within the tank 10 is controlled in the following manner. As explained herein above, a pressure sensing system such as contained in cage 80 is provided within the tank 10 (Figure 5). The sensing means is a movable wall 88 operatively connected to the transformer 180 (Figures 4 and 5) having a primary 182 wired to an oscillator 184. The oscillator 184 is preferably one which will produce a signal at a frequency other than a multiple of 60 cycles to reduce power line interference. A suitable oscillator can, for example, produce a 500 cycle voltage of suitable magnitude. The secondary of the transformer 180 comprises two windings 186 and 188, connected at opposite terminals to conductors 190 and 192. Between the conductors 192 and 190 is wired a nulling potentiometer 194 and a gain potentiometer 196. Connected to the other terminals of the windings 186 and 188 is a conductor 198 to which is secured the slide arm of the potentiometer 194. Between the conductor 198 and 190 and conductors 192 and 198 are provided a pair of identical filter condensers 200 and 202. Connected between the potentiometer 196 and conductor 192, by means of conductors 204 and 206, is an amplifier 208.

Wired to the amplifier 208 by means of conductors 210 and 212 is a transducer 214 for converting electrical signals to signals in some other energy medium. In this system, the conversion is to pneumatic signals. To this end, compressed signal air is supplied from an air source 150 to the transducer 214 through a duct 158. The output of the transducer 214 is supplied through airlines 220 to the air operated air inlet control valves 24 and 30 which are also connected to the power air source 216. Air flows downwardly to the retort 10 through the line 224 when the valve 24 has been opened. Air is removed from retort 10 through a line 28 to the valve 30 to reduce pressure in the retort.

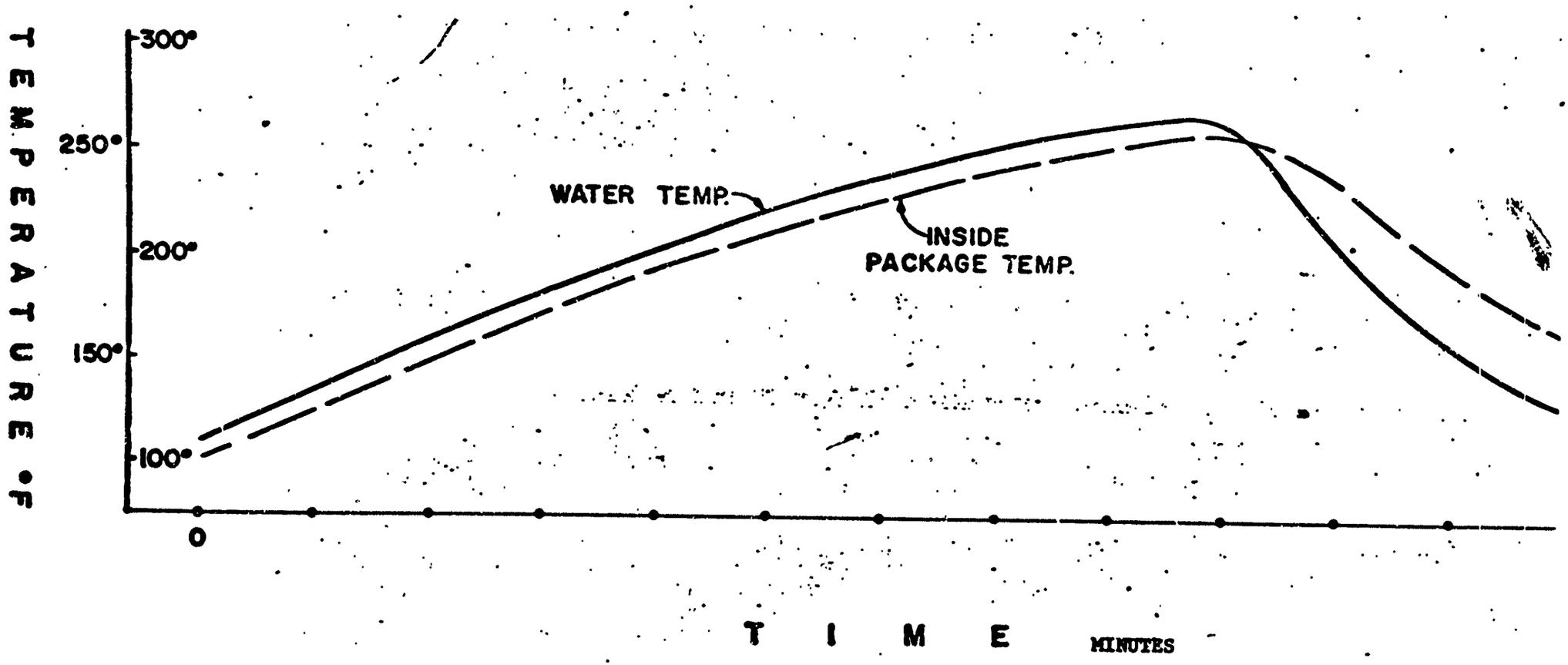
TEMPERATURE °F
300°
250°
200°
150°
100°
0
WATER TEMP.
INSIDE
PACKAGE TEMP.
T I M E
MINUTES

FIG. 6

During operation, when the entrapped gases formed by the packaged food product increases in volume, rod 103 (Figures 3 and 4) within the transformer 180 will be moved further from its central position, thereby increasing the voltage to the amplifier 208 and transducer 214. This in turn will cause a greater opening of the valve 24, allowing compressed air to enter, so as to provide a compensating external pressure within the tank 10. Likewise, when the package 56 decreases in size due to condensation of the moisture therein during the cooling portion of the cooking cycle, the decrease in size will be detected by the sensing means 80 and the rod 103 will be partially removed a corresponding distance in the transformer 180. The voltage will thereby be reduced to the amplifier 208 and the valve 30 opened in direct proportions thereto, thereby reducing the pressure within the tank 10. The pressure within the retort 10 is thus controlled automatically. The pressure is not sensed directly but is detected from the flexing of the pouch. As gas is generated in the pouch, and the rising temperature causes it to expand, the expansion is detected by the rod or core 103 being moved due to the action of pivoting wall 88. The magnitude of the alternating voltage signal from the transformer 180, which is proportional to the distance the core is moved, is amplified and rectified to a D.C. signal. It is then fed into a transducer 214 to convert the electrical signal into a proportional pneumatic signal that is compatible with that required to position air inlet and exhaust valves. As the pressure increases in the pouch, the rod 103 will move and the exhaust valve will start closing. The valves are used in a staggered mode such that the exhaust valve will, for example, close on 3-9 p.s.i. signal and the intake pressure valve will open in 9-15 p.s.i. signal. The system is at an equilibrium condition when both valves are closed. When the pressure builds up in the retort 10, the flexible pouch will be compressed and the rod 103 will move back to equilibrium position resulting in the pressure valve and exhaust valve being closed

When the cooling cycle takes place and the internal pressure decreases in the pouch, the rod 103 will move downwardly, thus causing the exhaust valve to open with a resulting reduction in over-riding pressure on the pouch. As the over-riding pressure falls, the rod 103 will be returned to its equilibrium position by the expansion of the pouch and both valves will again be closed.

The gain potentiometer 196 will enable the valves to be operated through their full range with different lengths of movement of the rod 103; in other words, with different amounts of expansion of the pouch.

Unclassified

Security Classification

DOCUMENT CONTROL DATA - R&D

(Security classification of title, body of abstract and indexing annotation must be entered when the overall report is classified)

1 ORIGINATING ACTIVITY (Corporate author)

The Pillsbury Company, Minneapolis, Minnesota

2a REPORT SECURITY CLASSIFICATION

Unclassified

2b GROUP

3 REPORT TITLE

DEVELOPMENT OF FLEXIBLE PACKAGED BREAD-TYPE PRODUCTS INCLUDING BREAD: PHASE I AND II - SINGLE AND MULTIPLE STAGE PROCESSING METHODS

4 DESCRIPTIVE NOTES *(Type of report and inclusive dates)*

Final - Phase I: 24 April 1963-23 April 1964; Phase II: 15 June 1964-14 June 1965

5 AUTHOR(S) *(Last name, first name, initial)*

NORRIS, CALVIN G.
GREENBERG, SHELDON I.

6 REPORT DATE	7a TOTAL NO OF PAGES	7b NO OF REFS
February 1966	68	0

8a CONTRACT OR GRANT NO	9a ORIGINATOR'S REPORT NUMBER(S)
DA 19-129-AMC-91 (N)	
b. PROJECT NO. 1K643303D548	
c	9b OTHER REPORT NO(S) *(Any other numbers that may be assigned this report)*
d.	66-30 FD FD-40

10 AVAILABILITY/LIMITATION NOTICES

Distribution of this document is unlimited.
Release to CFSTI is authorized.

11. SUPPLEMENTARY NOTES	12 SPONSORING MILITARY ACTIVITY
	Plant Products Branch, Food Division U. S. Army Natick Laboratories, Natick, Mass. 01760

13. ABSTRACT

A white bread type product packaged in a lightweight, flexible pouch has been developed. It is palatable, stable and commercially sterile. Both single and multiple stage processes were explored. Many formulations were tested with the best products obtained with a synthetic flour formula chemically leavened. A steam water retort was used for cooking and sterilizing the bread product. Sterilization values of $F_0 = 4$ were required for sterility.

DD FORM 1 JAN 64 1473

Unclassified

Security Classification

Unclassified
Security Classification

KEY WORDS	LINK A ROLE	LINK A WT	LINK B ROLE	LINK B WT	LINK C ROLE	LINK C WT
Development	8					
Preparation (formulation)	8					
Packaging	8					
Storage stability	8					
Bread	9					
Military rations	4					

INSTRUCTIONS

1. ORIGINATING ACTIVITY: Enter the name and address of the contractor, subcontractor, grantee, Department of Defense activity or other organization (*corporate author*) issuing the report.

2a. REPORT SECURITY CLASSIFICATION: Enter the overall security classification of the report. Indicate whether "Restricted Data" is included. Marking is to be in accordance with appropriate security regulations.

2b. GROUP: Automatic downgrading is specified in DoD Directive 5200.10 and Armed Forces Industrial Manual. Enter the group number. Also, when applicable, show that optional markings have been used for Group 3 and Group 4 as authorized.

3. REPORT TITLE: Enter the complete report title in all capital letters. Titles in all cases should be unclassified. If a meaningful title cannot be selected without classification, show title classification in all capitals in parenthesis immediately following the title.

4. DESCRIPTIVE NOTES: If appropriate, enter the type of report, e.g., interim, progress, summary, annual, or final. Give the inclusive dates when a specific reporting period is covered.

5. AUTHOR(S): Enter the name(s) of author(s) as shown on or in the report. Enter last name, first name, middle initial. If military, show rank and branch of service. The name of the principal author is an absolute minimum requirement.

6. REPORT DATE: Enter the date of the report as day, month, year, or month, year. If more than one date appears on the report, use date of publication.

7a. TOTAL NUMBER OF PAGES: The total page count should follow normal pagination procedures, i.e., enter the number of pages containing information.

7b. NUMBER OF REFERENCES: Enter the total number of references cited in the report.

8a. CONTRACT OR GRANT NUMBER: If appropriate, enter the applicable number of the contract or grant under which the report was written.

8b, 8c, & 8d. PROJECT NUMBER: Enter the appropriate military department identification, such as project number, subproject number, system numbers, task number, etc.

9a. ORIGINATOR'S REPORT NUMBER(S): Enter the official report number by which the document will be identified and controlled by the originating activity. This number must be unique to this report.

9b. OTHER REPORT NUMBER(S): If the report has been assigned any other report numbers (*either by the originator or by the sponsor*), also enter this number(s).

10. AVAILABILITY/LIMITATION NOTICES: Enter any limitations on further dissemination of the report, other than those imposed by security classification, using standard statements such as:

(1) "Qualified requesters may obtain copies of this report from DDC."

(2) "Foreign announcement and dissemination of this report by DDC is not authorized."

(3) "U. S. Government agencies may obtain copies of this report directly from DDC. Other qualified DDC users shall request through _____."

(4) "U. S. military agencies may obtain copies of this report directly from DDC. Other qualified users shall request through _____."

(5) "All distribution of this report is controlled. Qualified DDC users shall request through _____."

If the report has been furnished to the Office of Technical Services, Department of Commerce, for sale to the public, indicate this fact and enter the price, if known.

11. SUPPLEMENTARY NOTES: Use for additional explanatory notes.

12. SPONSORING MILITARY ACTIVITY: Enter the name of the departmental project office or laboratory sponsoring (*paying for*) the research and development. Include address.

13. ABSTRACT: Enter an abstract giving a brief and factual summary of the document indicative of the report, even though it may also appear elsewhere in the body of the technical report. If additional space is required, a continuation sheet shall be attached.

It is highly desirable that the abstract of classified reports be unclassified. Each paragraph of the abstract shall end with an indication of the military security classification of the information in the paragraph, represented as *(TS)*, *(S)*, *(C)*, or *(U)*.

There is no limitation on the length of the abstract. However, the suggested length is from 150 to 225 words.

14. KEY WORDS: Key words are technically meaningful terms or short phrases that characterize a report and may be used as index entries for cataloging the report. Key words must be selected so that no security classification is required. Identifiers, such as equipment model designation, trade name, military project code name, geographic location, may be used as key words but will be followed by an indication of technical context. The assignment of links, rules, and weights is optional.

Unclassified
Security Classification