ESD-TDR-66-44

148

RE-ENTRY ANALYSIS TECHNICAL MONOGRAPH

NO. 65-01 DECEMBER 1965

ESD RECORD COPY
RETURN TO
SCIENTIFIC & TECHNICAL INFORMATION DIVISION
(ESTI), BUILDING 1211

ESD ACCESSION LIST
ESTI Call No. AL 50161
Copy No. 1 of 1 cys.

TIME BEHAVIOR OF MULTIPLE SCATTERING

B. ROSEN
R.S. RUFFINE

This Research Program is a Part of Project DEFENDER Sponsored by the ADVANCED RESEARCH PROJECTS AGENCY (ARPA) ARPA ORDER NO. 600

PREPARED FOR

LINCOLN LABORATORY
MASSACHUSETTS INSTITUTE OF TECHNOLOGY
Lexington, Massachusetts
UNDER PRESS SUBCONTRACT 317

PREPARED BY

RADIO CORPORATION OF AMERICA
Defense Electronic Products
Missle and Surface Radar Division
Moorestown, New Jersey

AD0631339

RE-ENTRY ANALYSIS TECHNICAL MONOGRAPH
NO. 65-01

TIME BEHAVIOR OF MULTIPLE SCATTERING

by

B. Rosen
R. S. Ruffine

December 1965

ABSTRACT

Cross-polarized electromagnetic backscatter from a cylinder of underdense plasma is considered when the input is a r-f pulse of finite duration. The second Born approximation is employed. The dimensions of the scatterer are assumed large compared with the r-f wavelength and the correlation distance. For times sufficiently long after the pulse has ended, the "cross section" is shown to fall off as the reciprocal of the time squared.

Finally, an estimate is made of the effect of a non-uniform electron density and it is found that, provided the rate of decay is not too great, the cross-polarized backscatter and the directly-polarized backscatter arise from the same volume of the scatterer.

PRIME CONTRACT AF 19(628)-5167

Prepared Under Press Subcontract No. 317

Accepted for the Air Force
Franklin C. Hudson
Chief, Lincoln Laboratory Office

prepared for
Lincoln Laboratory
Massachusetts Institute of
Technology
Lexington, Massachusetts

prepared by
Radio Corporation of America
Defense Electronic Products
Missile and Surface Radar Division
Moorestown, New Jersey

TABLE OF CONTENTS

Section		Page
1	INTRODUCTION	1
2	THE WAVE EQUATION AND ITS SOLUTION	4
3	STATISTICAL CONSIDERATIONS	13
4	THE ISOCHRONAL SURFACES	16
5	THE INCOHERENT CROSS-SECTION FOR $\tau / T_\theta >> 1$	21
6	NON-UNIFORM ELECTRON DENSITY	25

LIST OF ILLUSTRATIONS

Figure		Page
1	Schematic of the Scattering	3
2	Geometry for Isochronal Surfaces	17
3	The Isochronal Surfaces for $\beta = 0$	19
4	The Isochronal Surfaces for $\beta = 1/2$	20
5	The Isochronal Surfaces for $\beta = 1$	20
6	Geometry of Scattering from a Cylinder	23

TIME BEHAVIOR OF MULTIPLE SCATTERING

SECTION 1

INTRODUCTION

Ruffine and de Wolf[1] have calculated the steady-state, incoherent, cross-polarized scattering of electromagnetic waves by a turbulent, tenuous plasma using the second Born approximation. The principal result of this calculation, under the conditions that these authors assume, is that the main contribution to the cross section for this process comes from terms corresponding to the first and second scatterings occurring in different correlation cells. Thus the effect of statistical averaging is solely that of determining the magnitude of the scattered amplitude from each cell.

The usefulness of cross-polarized data in the analysis of radar returns from turbulent media is limited unless it can be shown that most of the second scatterings take place within some maximum distance of the first scatterings. If they do not, then the returned signal will be very much stretched out in time. The signal will have "sampled" a large portion of the plasma and one could not then assign a localized cross section for cross-polarized scattering.

In this report we consider an idealized form for the wake, namely, a circular cylinder of diameter, d. As is readily seen, even directly scattered signals, supposedly given accurately by the first Born approximation, will be stretched out by a "time stretch" of the order $2\,d/\sin\theta$, where θ is the angle between the direction of propagation of the incident wave and the axis of the cylinder. We neglect of

1) R.S. Ruffine and D. A. de Wolf, Cross Polarized Electromagnetic Backscatter --- hereinafter referred to as (1)

course the very small sphericality of the incident wave at the position of the plasma.

In this report we also use the second Born approximation but consider an input of the form of a square-wave-modulated r-f signal. The carrier frequency is taken to be higher than the plasma frequency of the scattering medium. The time dependence of the scattered power is investigated for times which correspond to pulse stretching many times longer than the unavoidable stretch mentioned in the previous paragraph. A comparison is made between the power returned at such times and that returned at earlier times. The principal result is that the "cross section" decreases as the inverse square of the stretch time, for long enough times. Also the cross section becomes increasingly aspect sensitive as time increases.

In Section II we derive the relevant field amplitude and discuss some general aspects of the problem. In Section III we formally introduce the statistical averaging. The so-called isochronal surfaces are discussed in Section IV. In Section V we compute the incoherent cross section for large stretch times and compare the results with those of (1). Finally, in Section VI we estimate the proportion of the scattering which arises from the resolution cells to the scattering from one resolution cell when the electron density is not constant.

In Figure 1 there is shown a schematic of the scattering geometry and the relative sizes of the various distances involved in the problem.

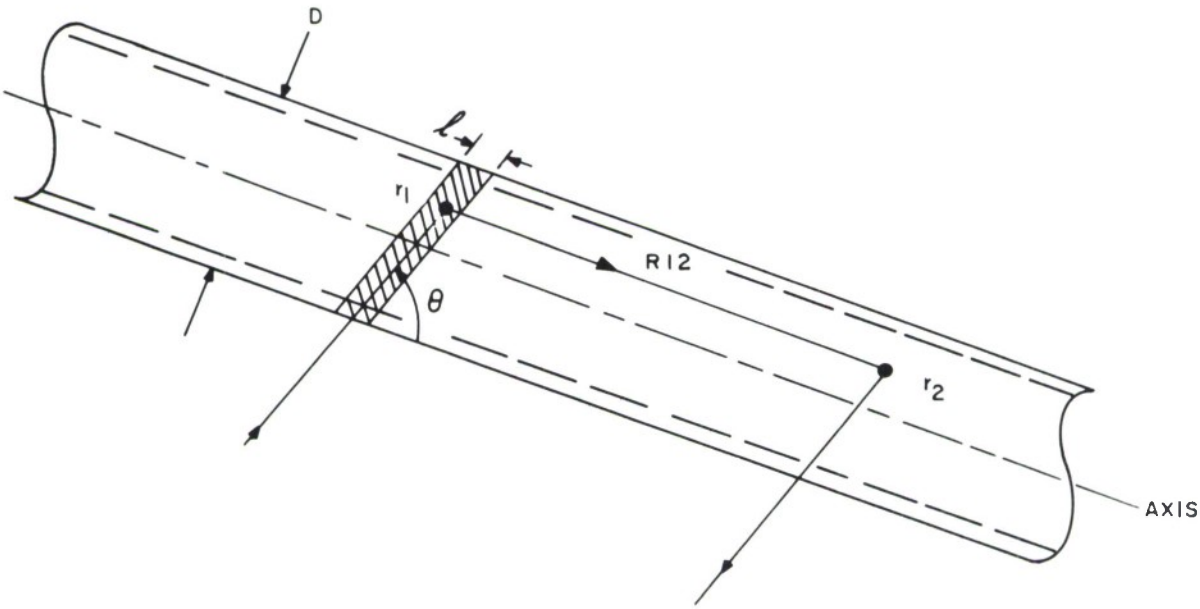

Figure 1. Schematic of the Scattering

SECTION 2

THE WAVE EQUATION AND ITS SOLUTION

We use the microscopic form of Maxwell's equations in Gaussian units

$$\nabla \times \vec{E} = -\frac{1}{c}\dot{\vec{H}}$$

$$\nabla \times \vec{H} = \frac{4\pi}{c}\vec{j} + \frac{1}{c}\frac{\partial E}{\partial t} \tag{1}$$

For a tenuous plasma we use the constituitive equation

$$\frac{\partial \vec{j}}{\partial t} \simeq \frac{d\vec{j}}{dt} \simeq \omega_p^2 \vec{E} \tag{2}$$

where $\omega_p^2 = 4\pi n e^2/m$ is the plasma frequency (n is the electron number density.) Following the usual procedure of eliminating the magnetic field one gets:

$$\frac{1}{c^2}\frac{\partial^2}{\partial t^2}\vec{E} + \nabla \times \nabla \times \vec{E} = -\frac{\omega_p^2}{c^2} E \tag{3}$$

We wish to solve this equation for the electric field by converting it into an integral equation and by then using the first few terms of the corresponding Neumann-Liouville series (successive Born approximations.) In order to do this it is necessary to invert the vector operators on the left-hand side. We shall do this symbolically. For didactic reasons we shall first treat the steady-state equation considered in (1). This equation can be written

$$-\nabla \times \nabla \times \vec{E} + k^2 \vec{E} = \vec{f} \tag{4}$$

If E were purely transverse, then the solution would be

$$\vec{E} = \frac{1}{\nabla^2 + k^2} \vec{f} \equiv \int G(\vec{r}, \vec{r}\,' f(\vec{r}\,') \, d^3 \vec{r}\,' \, (\nabla^2 + k^2) \, G(\underline{r}, \underline{r}\,')$$

$$= (\nabla^2 + k^2) \, G(r, r') = \delta^{(3)} (\vec{r} - \vec{r}\,') \tag{5}$$

As both $\vec{E}$ and $\vec{f}$ possess longitudinal parts we first decompose equation (4) into such parts and get

$$\vec{E}_T = \frac{1}{\nabla^2 + k^2} f_T; \quad \vec{E}_L = \frac{f_L}{k^2} \tag{6}$$

This follows since $\nabla \times \nabla \times \vec{E}$ is purely transverse and also since

$$\nabla (\nabla \cdot E_T) = 0.$$

Now

$$f_L = \vec{\nabla} \frac{1}{\nabla^2} \vec{\nabla}\,' \cdot f \equiv \vec{\nabla} \int \left(-\frac{1}{4\pi \quad r - \vec{r}\,'} \right) \nabla' \cdot f(\vec{r}\,') \, d^3 \vec{r}\,' \tag{7}$$

Combining the results of equations (6) and (7) one gets

$$\vec{E} = \frac{1}{\nabla^2 + k^2} \vec{f}_T + \frac{f_L}{k^2} = \frac{1}{\nabla^2 + k^2} \left[\vec{f} - \nabla \frac{1}{\nabla^2} \nabla' \cdot \vec{f} \right] + \frac{1}{k^2} \nabla \frac{1}{\Delta^2} \nabla' \cdot f \tag{8}$$

This last equation can be written

$$\vec{E} - \frac{1}{\nabla^2 + k^2} \vec{f} = \frac{1}{k^2 (k^2 + \nabla^2)} \nabla^2 \vec{\nabla}' \frac{1}{\Delta^2} \nabla' \cdot f = \frac{1}{k^2} \nabla \frac{1}{k^2 + \Delta^2} \nabla' \cdot f \tag{9}$$

The last term stands for

$$\frac{1}{k^2} \nabla \int G(r, r') \vec{\nabla}' \cdot \vec{f}(r') \, d^3 r' = -\frac{1}{k^2} \nabla \int (\quad ' \cdot G) \, f \, d^3 r'$$

$$= -\frac{1}{k^2} \nabla \nabla' \cdot \frac{1}{\nabla^2 + k^2} f \tag{10}$$

The first equality follows upon integration by parts and the parenthesis indieates that the differentiation is to be performed only on the Green's funetion G. Inserting the results of (10) into (9) yields (1 - (5)).

Returning to the ease at hand, we have an equation of the form:

$$- \nabla \times \nabla \times \vec{E} - D^2 \vec{E} = \vec{f},$$

$$D^2 = \frac{1}{e^2} \frac{\partial^2}{\partial t^2}$$

$$\vec{f} = \frac{\omega_p^2}{e^2} \vec{E} \tag{11}$$

Proeeeding as before we have

$$\vec{E}_T = \frac{1}{\nabla^2 - D^2} \vec{f}_T; \qquad \vec{E}_L = - \frac{1}{D^2} \cdot \vec{f}_L \tag{12}$$

These equations are quite similar to those in (6); the operator D^2 has replaeed $-k^2$. Sinee D eommutes with ∇^2, we ean immediately write

$$\vec{E} = \left(1 - \frac{\nabla \nabla}{D^2}\right) \cdot \frac{1}{\nabla^2 - D^2} \vec{f} \tag{13}$$

or equivalently

$$\vec{E}(r, t) = \left(1 - \frac{\nabla \nabla}{D^2}\right) \cdot \int G(x, x') f(x') d^4 x'$$

where

$x = (\vec{r}, et)$, $d^4 x = d^3 \vec{r}\, e\, dt$ and G is given by

$$G(x, x') = \frac{1}{4\pi |\bar{r} - \bar{r}'|} \delta\left[|\vec{r} - \vec{r}'| - e(t - t')\right], \quad t > t' \tag{14}$$

$$= 0 \qquad\qquad , \quad t < t'.$$

The operator D^{-2} is an integral operator inverse to D^2.

Denoting the operator $1 - \frac{\nabla\nabla}{D^2}$ by P we write down the first three terms of the familiar Born approximation:

$$\vec{E}(x) = E_o(x) + 4\pi r_o P(x) \cdot \int G(x-y)\, n(y)\, E_o(y)\, d^4 y \tag{15}$$

$$+ (4\pi r_o)^2 P(x) \cdot \int G(x-y)\, n(y)\, P(y) \cdot \int G_o(y-z)\, n(z)\, d^4z\, d^4y;$$

$$\left(r_o \equiv \frac{e^2}{mc^2} \right)$$

The third term in the above expression gives the lowest order contribution to the cross-polarized field at far distances from the scatterer.

The cross-polarized amplitude, in the second Born approximation, at the position of the receiver is then

$$\hat{e}_e \cdot \vec{E} \equiv \xi \equiv (4\pi r_o)^2 \int G(x-y)\, n(y) \left[\frac{(\hat{e}_e \cdot \nabla)(\hat{e}_o \cdot \nabla)}{D^2} \int G(y-z)\, n(z)\, E_o(z)\, d^4z \right] d^4y \tag{16}$$

where

$$E_o = \hat{e}_o \cdot \vec{E}_o$$

and $\hat{e}_o$, $\hat{e}_e$ are the unit polarization vectors for the direct- and cross-polarized directions, respectively. We have assumed that the scatterer is far from the receiver and have, thus, retained only the transverse part of the scattered field.

In what follows, we shall consider that the transmitter and receiver are located at the same point and we shall take this position to lie at the origin of the (spherical) co-ordinate system. The simplest next step that suggests itself is to consider an incident field of the form

$$E = \hat{e}_o E_o = \hat{e}_o \frac{f}{R} \delta(t - r/c) \tag{17}$$

and then to find the resultant scattered field as a function of time. However, such an input, if we use the Born formalism, would result in the plasma particles seeming to gain a constant speed and undergoing an unbounded displacement increasing linearly with time. Now an actual plasma subjected to such an electric field would undergo (damped) plasma oscillations. These oscillations are the resonances of the system; it is well known that resonance behavior cannot be described by any finite number of Born terms. Instead, we must consider inputs that are higher in frequency than the plasma oscillations. For this reason we take an input of the form

$$\vec{E}_o(r,t) = \frac{\hat{e}_o f}{R} \sin \omega\left(t - \frac{r}{c}\right)\left[H\left(t + T - \frac{r}{c}\right) - H\left(t - \frac{r}{c}\right)\right] \tag{18}$$

$$\equiv \hat{e}_o \frac{f}{R} I\left(t - \frac{r}{c}; T\right) \; ; \; H(u) = \begin{matrix} 1 & u > 0 \\ 0 & u < 0 \end{matrix}$$

i.e., a square-wave-modulated pulse of r-f at the angular frequency, ω. At the position of the radar set, $r = 0$, the pulse begins at $t = -T$ and ends at $t = 0$. We choose T such that ωT is a multiple of 2π.

The amplitude at the receiver can now be written more explicitly after integrating by parts as

$$\xi \simeq \frac{r_o^2}{R^2} f \int d^3 r_2 \, dc\, t_2 \, \delta\left[r_2 - c\,(t_o - t_2)\right] n\,(\vec{r}_2) \tag{19}$$

$$\left[\hat{e}_t \cdot \nabla_2 \hat{e}_o \cdot \nabla_2 \int \frac{\delta\,(R_{12} - c\,(t_2 - t_1))}{R_{12}} n\,(\vec{r}_1) \frac{1}{D^2} I\left(t_1 - \frac{r_4}{c}\right) d^3 r, c\, dt_1\right]$$

Here, $R_{12} = \left|\vec{r}_1 - \vec{r}_2\right|$ and R is the (almost constant) distance from the receiver to a point on the cylinder. Carrying out the time integrations, we get

$$\xi \simeq \frac{r_o^2}{R^2} f \int d^3 r_2 \, n\,(r_2) \, \hat{e}_c \cdot \nabla_2 \hat{e}_o \cdot \nabla_2 \left[\int \frac{n\,(\vec{r}_1)}{R_{12}} \frac{1}{D^2} I\left(t - \frac{r_1}{c} - \frac{r_2}{c} - \frac{R_{12}}{c}\right) d^3 r_1\right] \tag{20}$$

It is to be noted that the differential operators act only on the function R_{12}.

Because of the nature of the function I, $\frac{1}{D^2} I$ will be zero for

$$T + t - \frac{r_1}{c} - \frac{r_2}{c} - \frac{R_{12}}{c} < 0,$$

a function of time for

$$- T + \frac{r_1 + r_2 + R_{12}}{c} < t < \frac{r_1 + r_2 + R_{12}}{c}, \tag{21}$$

and a constant for $t > (r_1 + r_2 + R_{12})/c$. Recall that

$$\omega_p^2 E_o = \frac{\partial j_o}{\partial t} = \frac{\partial^2 P_o}{\partial t^2}$$

(P_o - electric polarization) so that $\frac{1}{D^2} I$ measures the polarization of the medium. In the Born formalism, then, there exists a remanent polarization of the medium due to the initial pulse. From our previous discussion we infer that the actual polarization will oscillate at the appropriate plasma frequency. In either case the electric fields for $t > (r_1 + r_2 = R_{12})/c$ are not at the proper frequency to be detected and we shall neglect the spurious terms.

It is convenient to consider that the incident beam intercepts only a finite segment of the cylinder. If θ denotes the angle between the axis of the cylinder and the direction of propagation of the incident wave, then the length of the cylindrical segment intercepted will be taken to be $\ell/\sin\theta$ where ℓ is the width of the beam. The directly polarized wave, granted that it is given by the first Born approximation, will then be stretched out for a time of the order of $(2\ell \cot\theta)/c$. Thus ℓ must be chosen small enough that the stretch time of $\frac{2\ell}{c} \cot\theta$ is much smaller than $2D/(c \sin\theta)$.

Returning now to the integral in equation (20), and utilizing all results of the last paragraph but one, then for a fixed time, t, we have that the integrand differs from zero (in an essential way) in the range of R_{12} as given by

$$T + t - \frac{(r_1 + r_2)}{c} > \frac{R_{12}}{c} > t - \frac{(r_1 + r_2)}{c} \tag{22}$$

Again denoting by d the diameter of the cylinder, we find for

$$t > 2\,R + \frac{2\,d}{\sin\theta} \tag{23}$$

that $R_{12} > 0$ and the lower bound of this important function increases linearly with the time. In the above expression, R is the distance from the receiver to the closest point at which the incident beam intercepts the cylinder.

Consider now that we hold the point of first scattering, r_1, as well as t fixed. The points where the second scatterings take place lie with volumes bounded by the surface of cylinder and the surfaces

$$\frac{R_{12}}{c} = T + t - \frac{(r_1 + r_2)}{c}; \quad \frac{R_{12}}{c} = t - \frac{(r_1 + r_2)}{c} \tag{24}$$

These last two surfaces will be referred to as the earlier and later isochronal surfaces, respectively. The later isochronal surface is actually defined only for $t > \frac{2\,D}{\sin\theta} + 2\,R$ and it is only for such time that the considerations which follow are intended.

As stated in the introduction, there is a stretching of the pulse even if the first Born term alone is considered because of the finite diameter of the cylinder. The directly polarized returns will persist until

$$t = \frac{2\,R}{c} + \frac{2\,D}{c\,\sin\theta} \tag{25}$$

This leads us to introduce the time $\tau = t - \frac{2\,R}{c} - \frac{2\,D}{c\,\sin\theta}$. In summary, for $\tau > 0$, $R_{12} > 0$.

We will be interested in the dependence of the cross-polarized field as a function of $\tau/\mathbf{T}_\theta$ where $\mathbf{T}_\theta = \frac{2D/\sin\theta}{c}$. We have that for $\tau/\mathbf{T}_\theta >> 1$, $R_{12} \simeq c\,\tau$. Also $\tau/\mathbf{T}_\theta > 2$, $R_{12} > c\,\mathbf{T}_\theta$. Let us now carry out the indicated differentiations in equation (18). Note that $\nabla I(t - R_{12} - r_1 - r_2) = (-\nabla R_{12})\, D I$. Thus:

$$\nabla\nabla \frac{1}{D^2}\frac{1}{R_{12}} = \frac{\nabla R_{12}\nabla R_{12}}{R_{12}} I - 2\nabla\left(\frac{1}{R_{12}}\right)\nabla R_{12}\frac{1}{D}I - \frac{1}{R_{12}}(\nabla\nabla R_{12})\frac{1}{D} + \left(\nabla\nabla\frac{1}{R_{12}}\right)\frac{1}{D^2}I \tag{26}$$

Inserting these results into equation (20) we get

$$\xi \simeq f\frac{r_o^2}{R^2}\int d^3\vec{r}_2\, n(\vec{r}_2)\int d^3\vec{r}_1\, n(\vec{r}_1)\,\frac{(\hat{c}_c\cdot\vec{R}_{12})(\hat{e}_o\cdot R_{12})}{R_{12}^3}\left[I + \frac{3}{R_{12}}\frac{1}{D}I + \frac{3}{R_{12}^2}\frac{1}{D^2}I\right] \tag{27}$$

As τ increases, the first term in the bracket will dominate the other terms since the lower bound on R_{12} increases linearly with τ. This first term gives the radiation field resulting from the first scattering; the other terms represent the induction and quasi-static fields.

For the time interval $-cT + (r_1 + r_2 + R_{12}) < ct < r_1 + r_2 + R_{12}$,

$$I = \sin\omega\left(t - \frac{\rho_{12}}{c}\right) \tag{28a}$$

$$\frac{1}{D}I = c\,\frac{1 - \cos\omega\left(t - \frac{\rho_{12}}{c}\right)}{\omega_o} \tag{28b}$$

$$\frac{1}{D^2}I = c^2\left[\frac{t - \frac{\rho_{12}}{c}}{\omega_o} - \frac{\sin\omega\left(t - \frac{\rho_{12}}{c}\right)}{\omega_o^2}\right] \tag{28c}$$

where

$$\rho_{12} = r_1 + r_2 + R_{12}$$

The terms c/ω_o in (28b) and $\frac{c^2}{\omega_o}\left[t - \rho_{12}/c\right]$ in (28c) will be ignored as being due to spurious d-c effects that are undetectable by the receiver.

Inasmuch as the scattered power rather than the field amplitude itself is of interest we shall eventually average over one cycle of the r-f excitation. Before we do this we shall perform, formally, the relevant statistical averaging.

SECTION 3

STATISTICAL CONSIDERATIONS

First let us consider the coherent cross section. We shall write $n = n_o + \Delta n$, where n_o is the average particle density and Δn is the fluctuation. Statistical averages will be denoted by the brackets $\langle\ \rangle$. Averages over a cycle will be indicated with a bar over the quantity. The statistically averaged field amplitude is given by

$$\langle \xi \rangle = \frac{f_{r_o}^{2}}{R^4} \int d^3r_1\, d^3r_2 \left[n_o(r_1)\, n_o(r_2) + \langle \Delta(r_1)\, \Delta(r_2) \rangle \right]$$

$$\frac{(\hat{e}_c \cdot \vec{R}_{12})\ (\hat{e}_o \cdot \vec{R}_{12})}{R_{12}^{\ 3}} \times \left[I + \frac{3}{R_{12}} \frac{1}{D} I + \frac{3}{R_{12}^{\ 2}} \frac{1}{D^2} I \right] \qquad (29)$$

If the diameter of the cylinder is large compared with the correlation length, L_c then $< \Delta(r_1)\ \Delta(r_2) >$ is negligible when $\tau / T_\theta >> 1$ for any reasonable correlation function.

Squaring and averaging over one cycle of the r-f excitation, one has, for τ/T large

$$\overline{\langle \xi \rangle^2} = \frac{f^2}{R^4}\, r_o^{\ 4} \iiiint d^3r_1\, d^3r_2\, d^3r_3\, d^3r_4\, n_o(r_1) \ldots$$

$$n_o(r_4) \frac{(\hat{c}_c \cdot \vec{R}_{12})(\hat{e}_c \cdot \vec{R}_{34})(\hat{e}_o \cdot \vec{R}_{12})(\hat{e}_o \cdot \vec{R}_{34})}{R_{12}^3\, R_{34}^3} \times B(\rho, R) \qquad (30)$$

where $B(\rho, R) =$

$$\frac{1}{2}\left[\left(1-\frac{3c^2}{\omega^2 R_{12}^2}\right)\left(1-\frac{3c^2}{\omega^2 R_{34}^2}\right)+\frac{3c^2}{\omega^2}\frac{1}{R_{12}}\frac{1}{R_{34}}\right]\cos\omega(\rho_{12}-\rho_{34})$$
$$+\frac{1}{2}\sin\omega(\rho_{12}-\rho_{34})\left[\frac{3c}{\omega}\left(\frac{1}{R_{12}}-\frac{1}{R_{34}}\right)-\frac{3c^2}{\omega^2}\left(\frac{1}{R_{12}^2}-\frac{1}{R_{34}^2}\right)\right] \tag{31}$$

Each of the terms in the integral above can be broken up into terms of the form

$$\iint d^3r_1\, d^3r_2 \left[\left(\hat{e}_c\cdot\vec{R}_{12}\right)\left(\hat{e}_o\cdot\vec{R}_{12}\right) \times \text{function of } R_{12} \times \text{trig function of } (\omega\rho_{12})\right] \times \left[\text{similar expression in } R_{34},\ \rho_{34}\right] \tag{32}$$

For τ/T_θ sufficiently large, R_{12} (and R_{34}) are bounded from below. Holding the point of first scattering $r_1(r_3)$ fixed and integrating over r_2 (r_4) will yield a very small result because of the oscillations of the trigonometric functions. This is true provided that n_o does not have a pronounced dependence upon position. In fact, we shall consider only the case where n_o varies slowly over several wavelengths of the r-f wave. However the fluctuations may vary considerably with position.

We turn now to the calculation of the incoherent scattering and compute the form of

$$\left\langle \xi^2 \right\rangle - \left\langle \xi \right\rangle^2 \equiv \xi^2_{inc} \tag{33}$$

when $\tau/T_\theta >> 1$. In this case, R_{12} and $R_{34} > D$ and if D/L_c is sufficiently large, then there is no effective correlation between the density fluctuations at points r_1 and r_2 and at r_3 and r_4. Similarly, with the restriction of the initial beam to a segment of the cylinder, and again for τ/T_θ large, correlations

between fluctuations at r_1 and r_4 and at r_3 and r_2 effectively vanish. One has, under these circumstances,

$$\xi_{inc}^{2} = \frac{f^2}{R^4} r_o^4 \iiiint d^3r_1\, d^3r_2\, d^3r_3\, d^3r_4 \frac{(\hat{e}_e \cdot \vec{R}_{12}) \cdots (\hat{e}_o \cdot \vec{R}_{34})}{R^3_{12}\, R^3_{34}}$$

$$\left[n(1)\, n(3) \langle \Delta^2 n \rangle C(2,4) + n(2)\, n(4) \langle \Delta^2 n \rangle C(1,3) + (\langle \Delta^2 n \rangle)^2\, C(1,3)\, C(2,4) \right] B(R,\rho) \tag{34}$$

where C (1,3) is the two-point correlation function (we take exp - R^2_{13}/L^2_e). In deriving this result we took the asymptotic form of the four point correlation function to be a product of two-point functions. For obvious reasons, any of the three-point correlation functions vanish here.

Thus, for τ/T_θ and D/L_e sufficiently large the incoherent cross section contains only terms of the Type I and Type IIIe (in the notation of Ruffine and de Wolf[1]). The terms of Type I, proportional to, say, $n_o(1)\, n_o(3)\, C(2,4)$, are small for reasons given in the discussion of the coherent scattering, namely, cancellations due to the trigonometric functions in $B(\rho, R)$. The same argument is given in (1). Thus we are led to consider only terms of type IIIe.

Before carrying out the integrations in equation (34) we turn to a consideration of the iso-surfaces mentioned in the previous section.

SECTION 4

THE ISOCHRONAL SURFACES

At the position of the scatterer the incident wave shall be considered as approximately planar over the entire length of the plasma cylinder; we shall use this approximation for the rest of the paper. As has been mentioned previously, the incident beam, for calculational purposes, is considered to be spatially restricted so as to intercept the cylinder across a length $\ell/\sin\theta$ parallel to the cylindrical axis. Figure 2 shows a cross section of the cylinder in a plane containing the axis of the cylinder and the propagation vector of the incident wave. The nearest point of interception of the beam and cylinder we take for the origin of a cartesian coordinate system ξ, η with η along the direction of propagation. Let the point (ξ_1, η_1) represent a point of first scattering and (ξ_2, η_2) the point of a possible second scattering. For the later isochronal surface, we have

$$\eta_1 + \eta_2 + \sqrt{\xi_2^2 + (\eta_1 - \eta_2)^2} + 2\,R = ct$$

or

$$\sqrt{\xi_2^2 + (\eta_2 - \eta_1)^2} = -(\eta_2 + \eta_1) + C(\tau + \mathbf{T}_\theta) \tag{35}$$

(recalling that $\mathbf{T}_\theta = 2\,D/C\sin\theta$).

Introducing the dimensionless quantities

$$\beta = \frac{2\,\eta_1}{c\,\mathbf{T}_\theta}\,;\ \alpha = \frac{\tau}{\mathbf{T}_\theta}\,;\ u = \frac{\xi_2}{c\,\mathbf{T}_\theta}\,;\ \nu = \frac{\eta_2}{c\,\mathbf{T}_\theta} \tag{36}$$

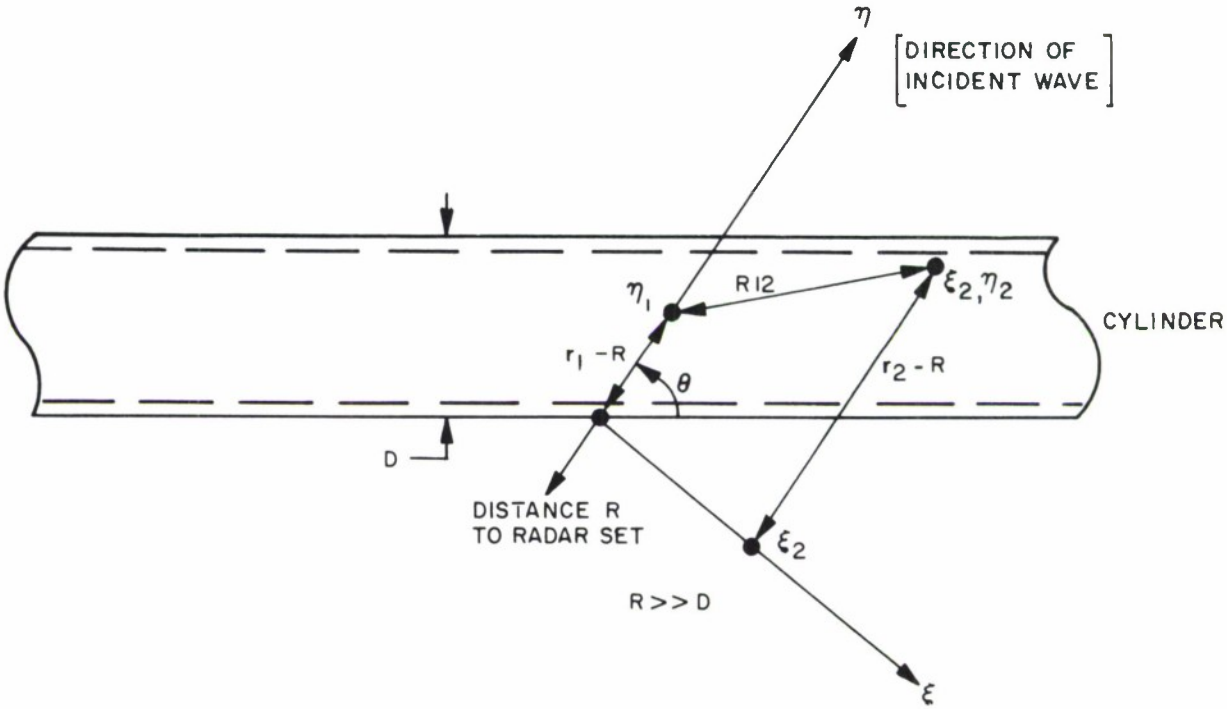

Figure 2. Geometry for Isochronal Surfaces

we get

$$\mathcal{V} = \frac{1+\alpha}{2} - \frac{u^2}{2\left[\alpha + 1 - \beta\right]} \qquad \begin{bmatrix} \beta \leq 1 \\ \alpha \geq 0 \end{bmatrix} \quad . \tag{37}$$

The isosurface is a parabolic sheet whose curvature is given by $-1/(\alpha + 1 - \beta)$ and whose point of interception with the η axis is $\frac{(1+\alpha)}{2}\, c\, T_\theta$, since, at the point of first scattering $0 < \xi < \ell$, the isochronal surface is actually a volume. The distance ℓ is taken small enough that we can ignore this complication in what follows.

The upper and lower edges of the cylindrical cross section are given by

$$V_U = \frac{1}{2} + u \operatorname{ctn} \theta$$
$$V_L = u \operatorname{ctn} \theta \tag{38}$$

The intersections between the parabola (37) and the lines (38) are at

$$u_U^{\pm} = (\alpha + 1 - \beta) \left\{ - \operatorname{ctn} \theta \pm \sqrt{\operatorname{ctn}^2 \theta + \frac{\alpha}{\alpha + 1 - \beta}} \right\}$$
$$u_L^{\pm} = (\alpha + 1 - \beta) \left\{ - \operatorname{ctn} \theta \pm \sqrt{\operatorname{ctn}^2 \theta + \frac{\alpha + 1}{\alpha + 1 - \beta}} \right\} \tag{39}$$

For $\alpha >> 1 - \beta$

$$u_U^{\pm} \approx (\alpha + 1 - \beta) \left\{ - \operatorname{ctn} \theta \pm \csc \theta \mp \frac{1 - \beta}{2\alpha} \sin \theta \right\}$$
$$u_L^{\pm} \approx (\alpha + 1 - \beta) \left\{ - \operatorname{ctn} \theta \pm \csc \theta \pm \frac{\beta}{2(\alpha + 1)} \sin \theta \right\} \tag{40}$$

From this one finds

$$\left| u_L^{\pm} - u_U^{\pm} \right| \approx \frac{\sin \theta}{2} \tag{41}$$

The distance between two members of a set of intercepts, measured along the axis of the cylinder is approximately $\frac{1}{2}(1 - \cos \theta)$. If the two intercepts are connected by a chord, this chord makes an angle ϕ with the axis of the cylinder, where ϕ is given by

$$\tan \phi = \frac{1 - \cos \theta}{\sin \theta} = \tan \frac{\theta}{2}; \quad \phi \sim \frac{\theta}{2} \tag{42}$$

since in units of $c\mathbf{T}_\theta$ the diameter is $1/2 \sin \theta$.

The earlier isochronal surfaces are easily obtained by replacing τ by $\tau + T$ in the appropriate equations. T, it will be recalled, is the time duration of the initial r-f pulse. Certainly, when the above approximations hold for later isochronal surfaces they hold for the earlier one. In Figures 3, 4, and 5 we show the later isochronal surfaces for values of $\beta = 0$, 1/2, and 1 respectively and for various values of α.

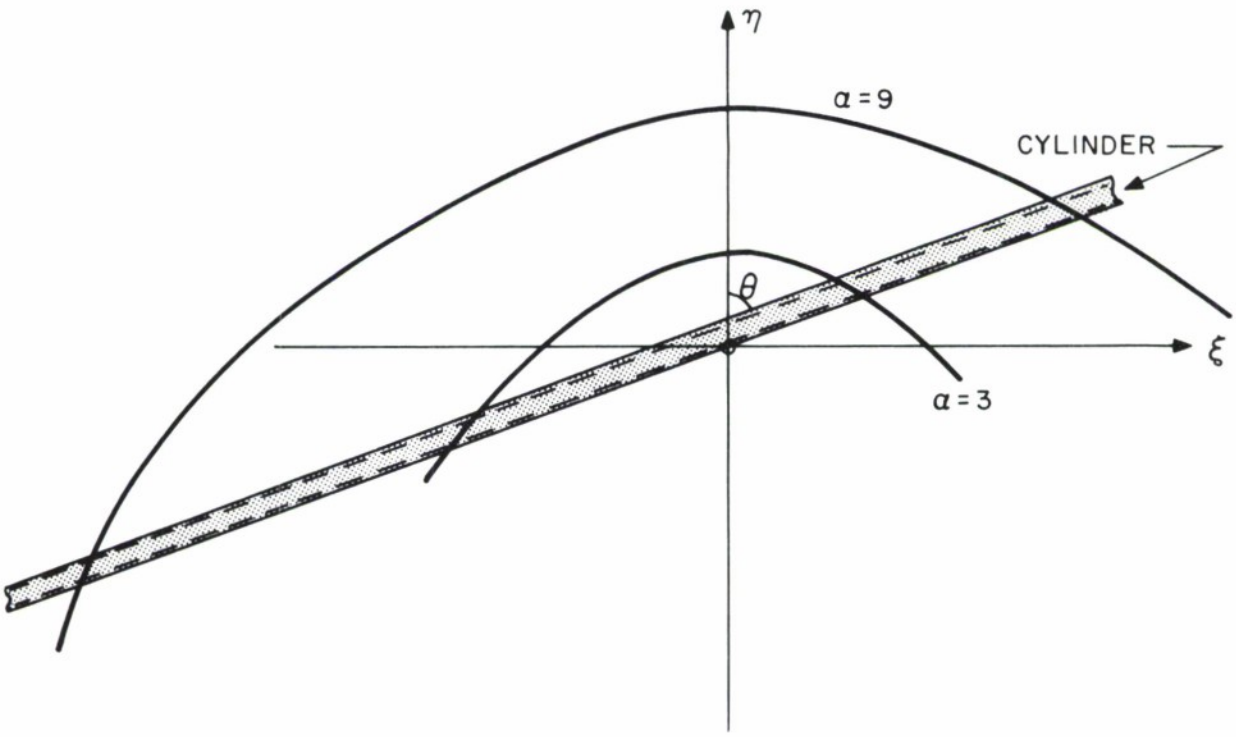

Figure 3. Isochronal Surfaces ($\beta = 0$)

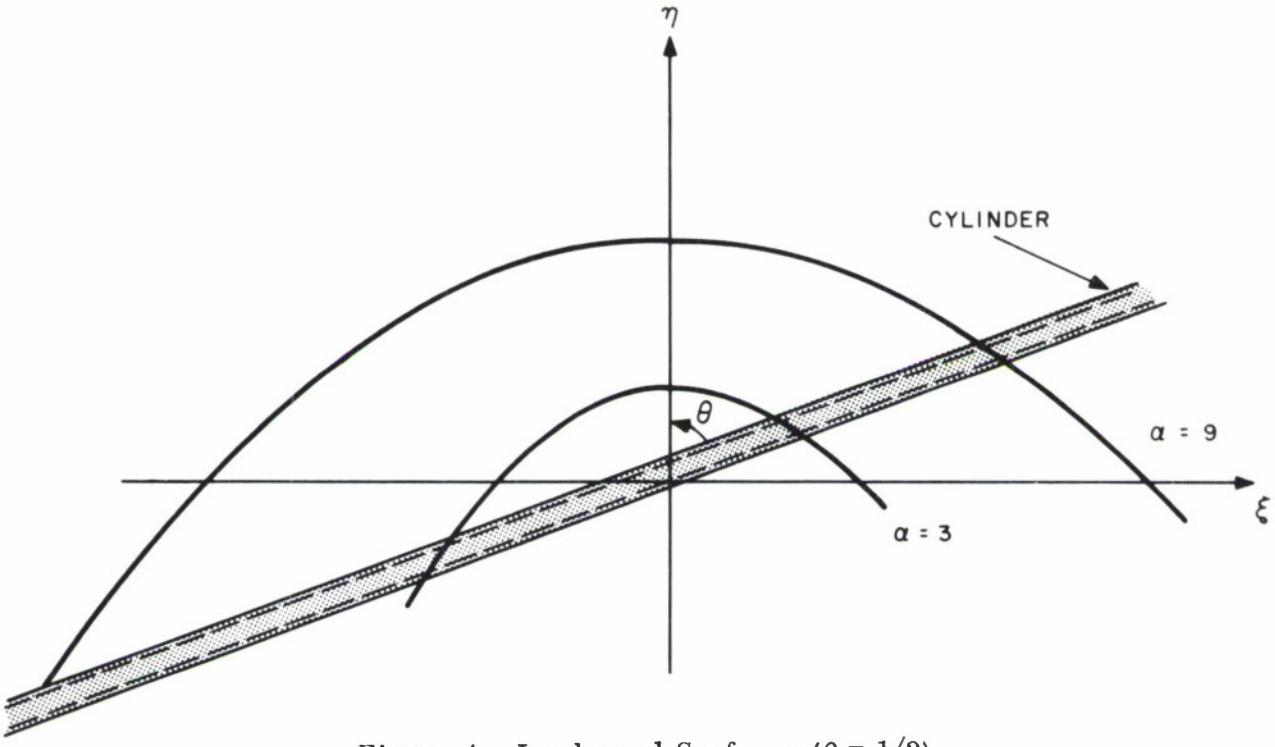

Figure 4. Isochronal Surfaces ($\beta = 1/2$)

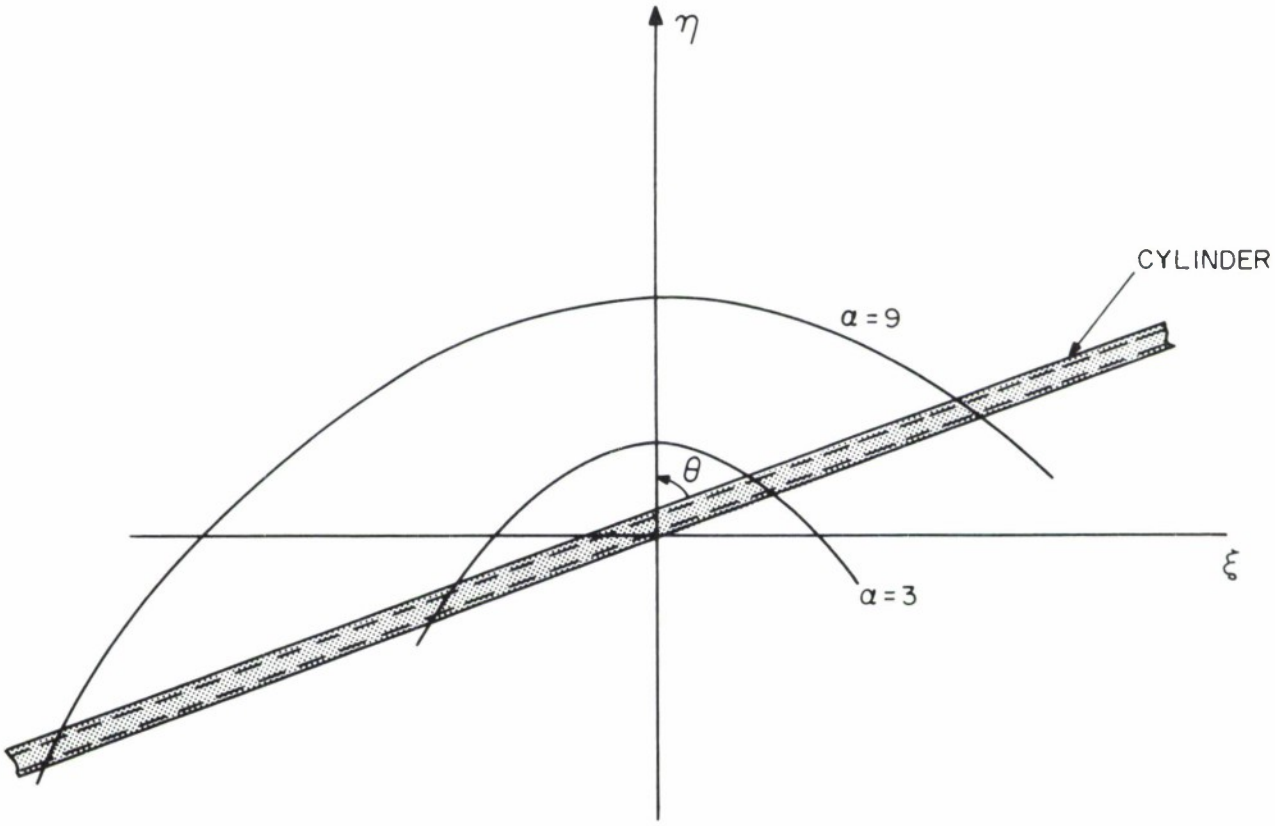

Figure 5. Isochronal Surfaces ($\beta = 1$)

SECTION 5

THE INCOHERENT CROSS SECTION FOR $\tau/T_\theta >> 1$

In this case, the dominant contribution will be

$$\overline{\xi^2_{inc}} \approx f^2 \frac{r_o^4}{R^4} \iiiint \frac{\left[\langle \Delta^2 \rangle\right]^2 c(1,3)\, c(2,4)}{R_{12}\, R_{34}} \left(\frac{1}{2}\right) \cos \frac{\omega}{c} (\rho_{12} - \rho_{34}) \left[(\hat{e}_c \cdot \hat{R}_{12}) \ldots (\hat{e}_o \cdot \hat{R}_{34})\right] \tag{43}$$

where $\hat{R}_{12}$ and $\hat{R}_{34}$ are unit vectors. If the turbulence of the plasma is uniform throughout the cylinder, then the essential time dependence is contained in the product $R_{12}\, R_{34}$ occurring in the denominator of the integrand. This is so because the lower bound on this product increases quadratically with the time; thus the integral varies as the inverse square of the time for sufficiently long times. An inspection of Figures 3-5 also shows that the scattered, incoherent, cross polarized cross section becomes increasingly aspect sensitive as time increases since $\hat{R}_{12}$ and $\hat{R}_{34}$ are asymptotically parallel to the cylindrical axis. This contrasts with the results in (1); in the case treated in that paper there is, however, always an input.

These results are what is to be expected — at the times considered the radiation field from the first scattering gives the largest contribution and the power in the radial field drops off as the distance squared. Also, the polarization of the first scattered wave is perpendicular to $\vec{R}_{12} \times \vec{R}$. The amplitude in the R_{12}

direction is proportional to $\left| \hat{e}_o \times \hat{R}_{12} \right|$ and the projection of the polarization of the wave along R onto $\hat{e}_c$ is $\left| \hat{e}_e \times \hat{R}_{12} \right|$. When $\hat{e}_o$, $\hat{e}_e$ and $\hat{R}_{12}$ lie in one plane

$$\left| (\hat{e}_o \times \hat{R}_{12}) \right| \left| (\hat{e}_e \times \hat{R}_{12}) \right| = \left| (\hat{e}_o \times \hat{R}_{12}) \cdot (\hat{e}_e \times \hat{R}_{12}) \right| = \left| (\hat{e}_e \cdot \hat{R}_{12}) (\hat{e}_o \cdot \hat{R}_{12}) \right|$$

Before proceeding we shall change our notation to more nearly match that of (1). First, at the position of the scatterer the incident wave is nearly plane. Secondly a unit amplitude incident field is assumed in (1). We thus make the replacements

$$\frac{f^2}{R^2} \rightarrow 1, \quad \frac{\omega}{c} \rho_{\substack{12\\34}} \rightarrow R \cdot (r_{\substack{1\\3}} + r_{\substack{2\\4}}) + \vec{k} R_{\substack{12\\34}}$$

where $\vec{k}$ is the direction of propagation. We multiply equation (34) by $4 \pi R^2$ to form a scattering cross section. Finally it is necessary to replace $4\pi \Delta n$ by the Δ of (1).

This gives us a value for the incoherent cross section when τ/T_θ is not large and the ratio of $S = < \xi^2 (\tau >> \tau_o) >/< \xi^2 >$ for $\tau/T_\theta >> 1$ and the values of $< \xi^2_{inc} >$just discussed provides a dimensionless measure of the extent of pulse stretching.

We have seen that the incoherent power return should vary as $(e\tau)^{-2}$ when $\tau/T_\theta >> 1$. Now if the pulse length, eT, is many times larger than the diameter, there will be a time when the scattering cross section should be given very nearly by the steady state result of (1) Equation 50. This will be true at times when the later isosurface has not yet developed but the earlier isosurface is at a large enough distance from the initial point of scattering that the results of Ruffine and de Wolf[1] apply. (Recall that these authors assume

that the length of the cylinder is large compared with the radius.) The "active region" of the cylinder we are discussing is given by the distance between the two earlier isosurfaces along the axis. The only change we must make in equation 50[1] is to replace the volume in that formula by the volume $\pi a^2 \ell / \sin\theta$ where a is the radius of the cylinder.

Making the indicated changes and forming the ratio S we find

$$S = \frac{3(2)^7 e R^2 L^2 \sin\theta}{(4n)^3 \pi^2 a^3 \ell L_c^6 \left\{3 + \sin\psi + \cdots\right\}}$$

$$\times \iiiint d^3\vec{r}_1 \cdots d^3\vec{r}_4 \frac{\left[(\hat{e}_c \cdot R_{12})\ (\hat{e}_o \cdot \hat{R}_{12})\ (\hat{e}_c \cdot \hat{R}_{34})\ (\hat{e}_o \cdot \hat{R}_{34})\right]}{R_{12}\ R_{34}}$$

$$B(R_1 \rho)\ C(1,3)\ C(2,4)$$

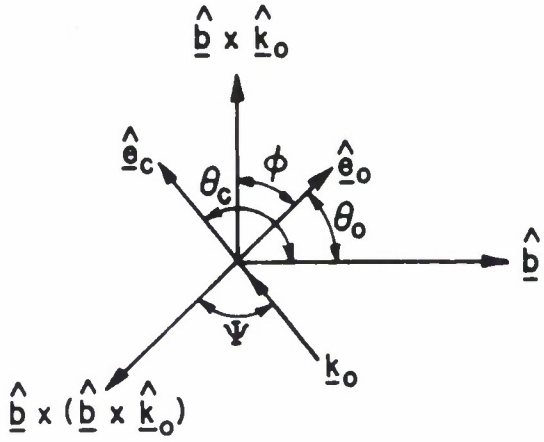

Figure 6. Geometry of Scattering from a Cylinder

The relevant angles are shown in Figure 6.

For the integration over $\vec{r}_3$ ($\vec{r}_4$), we first shift the origin to $\vec{r}_1$ ($\vec{r}_2$) and use the nature of the correlation function to justify the extension of the resulting integrals to all of space. Furthermore, we can replace R_{34} by R_{12} except in

the function B (R, ρ). The R_{34} occurring in B (R, ρ) can be approximated by

$$R_{34} = R_{12} + \hat{R}_{12} \cdot \left[\vec{r}_4 - \vec{r}_2 - (\vec{r}_3 - \vec{r}_1) \right]$$

Only the terms in B (R, ρ) proportional to cos $\frac{\omega}{c}$ $(\rho_{12} - \rho_{34})$ will contribute (the one proportional to the sin function gives zero in this approximation), and of these we consider only terms independent of R_{12} and R_{34}:

$$S \simeq \frac{3\,(2)^7 \sin\theta\,\pi}{(4\pi)^3\,\ell a^3} \left(\frac{1}{2}\right) \iint \frac{d^3r_1\, d^3r_2}{R_{12}^2} \, (\hat{e}_c \cdot \hat{R}_{12})^2 \, (\hat{e}_o \cdot \hat{R}_{12})^2$$

$$\frac{1}{\left\{3 + \sin^2\psi + \cdots\right\}}$$

The integral over $\vec{r}_1$ is essentially the $\vec{r}_1$ volume ($\pi\, a^2\, \ell/\sin\theta$) times the value of the integral over $\vec{r}_2$ when $\vec{r}_1$ is on the axis of cylinder. Thus,

$$S \approx \frac{3}{\pi a \left\{3 + \cdots\right\}} \int \frac{d^3r_2}{R_{12}^2} \, (\hat{e}_c \cdot \hat{R}_{12})^2 \, (\hat{e}_o \cdot \hat{R}_{12})^2$$

Assuming that $a/R_{12} << 1$, $(\hat{e}_c - \hat{R}_{12})^2\, (\hat{e}_o - R_{12})^2 \simeq (\hat{e}_c - \hat{z})\, (\hat{e}_o \cdot \hat{z})^2$ or $\cos^2\theta_o \cos^2\theta_c$ in the notation of (1). For the purposes of integration, we replace the isochronal surfaces by planes perpendicular to the axis passing through the points of intersection of these surfaces with the axis.

Then

$$S = \frac{6a\left[\cos^2\theta_o \cos^2\theta c\right]}{\left\{3 + \cdots\right\}} \left[\underbrace{\int_{z_E}^{z_L} \frac{dz}{z^2}}_{\text{Left-hand Iso-volume}} + \underbrace{\int_{z_L}^{z_E} \frac{dz}{z^2}}_{\text{Right-hand Iso-volume}} \right] \tag{44}$$

(Equation continued on next page)

(44) (cont.)

$$= \frac{3a \cos^2 \theta_o \cos^2 \theta c}{\left\{ 3 + \cdots \right\}} \left[\left(\frac{z_L - z_E}{z_E z_L} \right)_{\substack{\text{Left} \\ \text{hand}}} + \left(\frac{z_E - z_L}{z_E z_L} \right)_{\substack{\text{Right} \\ \text{hand}}} \right]$$

$$\frac{3a \cos^2 \theta_o \cos^2 \theta c}{\left\{ 3 + \cdots \right\}} \left[\frac{2 c T}{\left(c \tau + \frac{D}{\sin \theta} \right) \left(c \tau + c T + \frac{D}{\sin \theta} \right)} \right]$$

Thus the pulse stretching falls off as the inverse square of the stretch time.

VI. NON-UNIFORM ELECTRON DENSITY

In order to obtain Equation (44) a number of simplifying assumptions were made including:

1) That the correlation function is of the form $\exp(-R^2/\ell^2 c)$
2) That the fluctuation strength $< \Delta^2 >$ is a constant.

Since neither of these conditions are observed in actual range observations, it is interesting to see what results when they are dropped. We shall also ask a somewhat different question, namely, given that at some time, t, we observe a direct and a cross polarized return, <u>what is the error in assuming that the two scatterings which caused the cross-polarized return both occurred in the volume that caused the direct return?</u> We assume that the incident pulse is much longer than the diameter of the cylinder and is infinitely wide. The direct scattering takes place in the illuminated volume of the cylinder defined as the volume lying between planes located at distances $c\,(t + T)/2$ and $ct/2$. When the radar line of sight is along the cylinder areas, at least one of the

collisions must occur in this volume. Since we need only be concerned with the case of small angle-θ, we take this to be true in what follows. Proceeding as before, Equation (43) can be put into the form

$$\overline{\xi^2_{inc}} = \frac{1}{2}\frac{r_o^2}{R^2} \iint \frac{d\underline{\tau}_1\, d\underline{\tau}_2}{R^2_{12}} \left\langle \Delta^2 (1) \right\rangle \left\langle \Delta^2 (2) \right\rangle F(\underline{k} + \underline{k}_o)$$

$$F(\underline{k} - \underline{k}_o) \times (\hat{\underline{e}}_c \cdot \hat{\underline{k}})^2 \, (\hat{\underline{e}}_o \cdot \hat{\underline{k}})^2 , \tag{45}$$

$$\underline{k} = k\,\hat{R}_{12}, \quad F(\underline{k}) = \int C(R) \cos(k \cdot R)\, d R.$$

The limits on r_1 and r_2 can be derived from (21). When r_1 and r_2 lie in the illuminated volume, (45) is equivalent to the result obtained in (1). (The factor of 1/2 arises from the fact that we have always taken r_1 and r_3 to be in the same correlation cell.) We now proceed to estimate the contribution to (45) when r_1 lies outside of the correlation volume.

For sufficiently large separation between scatterers, $\underline{k}$ lies along the cylinder axis. Defining this axis by a unit vector, b, we have

$$\overline{\xi^2_{inc}} = \frac{1}{2}\frac{r_o^2}{R^2} \int \frac{d\underline{r}_1\, d\underline{\ell}_2}{R^2_{12}} \left\langle \Delta^2 \right\rangle^2 F(\underline{k}_o + \underline{k})\, F(k_o - \underline{k})$$

$$(\hat{\underline{e}}_c \cdot \hat{k})^2 \, (\hat{\underline{e}}_o \cdot \hat{k})^2$$

$$+ \frac{1}{2}\frac{r_o^2}{R^2} F(kc + k\,\hat{\underline{b}})\, F(\underline{k}_o - k\,\hat{\underline{b}})\, (\underline{e}_c \cdot b)^2 \, (\underline{e}_o \cdot \underline{b})^2 \tag{46}$$

$$\int_{V_1 V_2} \frac{d\underline{r}_1 \, d\underline{r}_2}{R_{12}^2} \left\langle \Delta(1)^2 \right\rangle \left\langle \Delta(2) \right\rangle^2 \tag{45 (cont.)}$$

where V_1 is the volume of the cylinder below the plane at ct/2 and V_2 is the illuminated volume. To estimate the value of the second integral in (46), choose the origin of the coordinate system at the center of the illuminated volume and replace R_{12} by r_1. The integral becomes

$$\iint \frac{d\underline{r}_1 \, d\underline{r}_2}{R_{12}^2} \left\langle \Delta(1)^2 \right\rangle \left\langle \Delta(2)^2 \right\rangle$$

$$\approx V_2 \left\langle \Delta(2)^2 \right\rangle \pi a^2 \int_{-\ell_o}^{-\frac{cT}{4\cos\theta}} \frac{\left\langle \Delta(1^2) \right\rangle dx_1}{x_1^2}$$

where ℓ_o is the distance from the start of the cylinder to the center of the illuminated volume. Thus, we may define a new quantity S' to be the ratio between the return in which one scattering is outside the illuminated volume to the return in which both scatterings are outside the illuminated volume.

$$S' = \frac{3\pi^2}{16} \left[\frac{a}{\langle \Delta(2)^2 \rangle} \int \frac{\langle \Delta^2 \rangle dx}{x^2} \right]$$

$$\left[\frac{F(\underline{k}_o + k\hat{\underline{b}}) \, F(\underline{k}_o - k\hat{b}) \, (\hat{e}_o \cdot \hat{\underline{b}})^2 \, (\hat{e}_c \cdot \hat{b})^2}{\int d\hat{k} \, F(\underline{k}_o + \underline{k}) \, F(\underline{k}_o - \underline{k}) \, \frac{(\hat{e}_o \cdot \hat{k})^2 \, (\hat{e}_c \cdot \hat{k})^2}{\sin\theta}} \right]$$

where $\cos\theta = \hat{k} \cdot \hat{b}$.

For the special case of a Gaussian correlation function, S' reduces to

$$S' = 6 \frac{\cos^2 \theta_o \cos^2 \theta_c}{3 + \cos^2 \theta_o + \cos^2 \theta_c + 9 \cos^2 \theta_o \cos^2 \theta_c} \left[\frac{a}{< \Delta (2)^2 >} \int_{-\ell_o}^{-\frac{cT}{4 \cos \theta}} \frac{< \Delta (x)^2 > dx}{x^2} \right].$$

(Please see Reference 1 for more detail.)

Finally, we assume that both unit polarization vectors have the same projection on the plane containing $\underline{k}_o$ and $\underline{b}$ and we estimate the contribution from the adjoining resolution cell. Assuming

$$\cos^{-1} \hat{\underline{k}}_o \cdot \hat{\underline{b}} \approx 20°$$

$$\cos \theta_o = \cos \theta_2 = .22$$

$$\ell_o = \frac{cT}{2 \cos \theta}$$

then

$$S' \approx 2 \times (.0025) \frac{a}{\frac{cT}{2 \cos \theta}} \frac{\langle \Delta (1)^2 \rangle}{\langle \Delta (2)^2 \rangle}$$

Taking $a/\ell_o \approx 0.1$ (surely an overestimate)

we have $S' \approx 5 \times 10^{-4} \frac{\langle \Delta (1^2) \rangle}{\langle \Delta (2)^2 \rangle}$.

The ratio of $< \Delta(1)^2 > / < \Delta(2)^2 >$ can be estimated from the ratio of direct polarized wake scattering in adjacent resolution cells. Thus, if $S' < 10^{-2}$ for example, the cross-polarized scattering can be assumed to arise from the same resolution cell as the directly-polarized scattering. This will occur when

$$\frac{\langle \Delta(1)^2 \rangle}{\langle \Delta(2)^2 \rangle} < 5 \times 10^2$$

or when the direct polarized scattering decreases by less than approximately 23 db per resolution cell.

UNCLASSIFIED

RCA
RATM No. 65-01 - December 1965
DDC No.
Radio Corporation of America, Defense Electronic Products
Missile and Surface Radar Division
Moorestown, New Jersey
TIME BEHAVIOR OF MULTIPLE SCATTERING
by B. Rosen and R. S. Ruffine

Cross-polarized electromagnetic backscatter from a cylinder of underdense plasma is considered when the input is a r-f pulse of finite duration. The second Born approximation is employed. The dimensions of the scatterer are assumed large compared with the r-f wavelength and the correlation distance. For times sufficiently long after the pulse has ended, the "cross section" is shown to fall off as the reciprocal of the time squared.

Finally, an estimate is made of the effect of a non-uniform electron density and it is found that, provided the rate of decay is not too great, the cross-polarized backscatter and the directly-polarized backscatter arise from the same volume of the scatterer.

UNCLASSIFIED

UNCLASSIFIED
RE-ENTRY ANALYSIS
TECHNICAL
MONOGRAPH
RATM-65-01 - December 1965
(REPORT CLASSIFICATION:
UNCLASSIFIED)

UNCLASSIFIED

UNCLASSIFIED

RCA
RATM No. 65-01 - December 1965
DDC No.
Radio Corporation of America, Defense Electronic Products
Missile and Surface Radar Division
Moorestown, New Jersey
TIME BEHAVIOR OF MULTIPLE SCATTERING
by B. Rosen and R. S. Ruffine

Cross-polarized electromagnetic backscatter from a cylinder of underdense plasma is considered when the input is a r-f pulse of finite duration. The second Born approximation is employed. The dimensions of the scatterer are assumed large compared with the r-f wavelength and the correlation distance. For times sufficiently long after the pulse has ended, the "cross section" is shown to fall off as the reciprocal of the time squared.

Finally, an estimate is made of the effect of a non-uniform electron density and it is found that, provided the rate of decay is not too great, the cross-polarized backscatter and the directly-polarized backscatter arise from the same volume of the scatterer.

UNCLASSIFIED

UNCLASSIFIED
RE-ENTRY ANALYSIS
TECHNICAL
MONOGRAPH
RATM-65-01 - December 1965
(REPORT CLASSIFICATION:
UNCLASSIFIED)

UNCLASSIFIED

UNCLASSIFIED

RCA
RATM No. 65-01 - December 1965
DDC No.
Radio Corporation of America, Defense Electronic Products
Missile and Surface Radar Division
Moorestown, New Jersey
TIME BEHAVIOR OF MULTIPLE SCATTERING
by B. Rosen and R. S. Ruffine

Cross-polarized electromagnetic backscatter from a cylinder of underdense plasma is considered when the input is a r-f pulse of finite duration. The second Born approximation is employed. The dimensions of the scatterer are assumed large compared with the r-f wavelength and the correlation distance. For times sufficiently long after the pulse has ended, the "cross section" is shown to fall off as the reciprocal of the time squared.

Finally, an estimate is made of the effect of a non-uniform electron density and it is found that, provided the rate of decay is not too great, the cross-polarized backscatter and the directly-polarized backscatter arise from the same volume of the scatterer.

UNCLASSIFIED

UNCLASSIFIED
RE-ENTRY ANALYSIS
TECHNICAL
MONOGRAPH
RATM-65-01 - December 1965
(REPORT CLASSIFICATION:
UNCLASSIFIED)

UNCLASSIFIED

UNCLASSIFIED

RCA
RATM No. 65-01 - December 1965
DDC No.
Radio Corporation of America, Defense Electronic Products
Missile and Surface Radar Division
Moorestown, New Jersey
TIME BEHAVIOR OF MULTIPLE SCATTERING
by B. Rosen and R. S. Ruffine

Cross-polarized electromagnetic backscatter from a cylinder of underdense plasma is considered when the input is a r-f pulse of finite duration. The second Born approximation is employed. The dimensions of the scatterer are assumed large compared with the r-f wavelength and the correlation distance. For times sufficiently long after the pulse has ended, the "cross section" is shown to fall off as the reciprocal of the time squared.

Finally, an estimate is made of the effect of a non-uniform electron density and it is found that, provided the rate of decay is not too great, the cross-polarized backscatter and the directly-polarized backscatter arise from the same volume of the scatterer.

UNCLASSIFIED

UNCLASSIFIED
RE-ENTRY ANALYSIS
TECHNICAL
MONOGRAPH
RATM-65-01 - December 1965
(REPORT CLASSIFICATION:
UNCLASSIFIED)

UNCLASSIFIED

DOCUMENT CONTROL DATA – R&D

(Security classification of title, body of abstract and indexing annotation must be entered when the overall report is classified)

1. ORIGINATING ACTIVITY *(Corporate author)*
Radio Corporation of America under Subcontract No. 317 to Lincoln Laboratory, M.I.T.

2a. REPORT SECURITY CLASSIFICATION
Unclassified

2b. GROUP
None

3. REPORT TITLE
Time Behavior of Multiple Scattering

4. DESCRIPTIVE NOTES *(Type of report and inclusive dates)*
Technical Monograph

5. AUTHOR(S) *(Last name, first name, initial)*
Rosen, B. and Ruffine, R.S.

6. REPORT DATE
December 1965

7a. TOTAL NO. OF PAGES
32

7b. NO. OF REFS
1

8a. CONTRACT OR GRANT NO.
AF 19(628)-5167

b. PROJECT NO.
ARPA Order 600

c.

d.

9a. ORIGINATOR'S REPORT NUMBER(S)
Technical Monograph No. 65-01

9b. OTHER REPORT NO(S) *(Any other numbers that may be assigned this report)*
ESD-TDR-66-44

10. AVAILABILITY/LIMITATION NOTICES
Distribution of this document is unlimited.

11. SUPPLEMENTARY NOTES
None

12. SPONSORING MILITARY ACTIVITY
Advanced Research Projects Agency, Department of Defense

13. ABSTRACT

Cross-polarized electromagnetic backscatter from a cylinder of underdense plasma is considered when the input is a r-f pulse of finite duration. The second Born approximation is employed. The dimensions of the scatterer are assumed large compared with the r-f wavelength and the correlation distance. For times sufficiently long after the pulse has ended, the "cross section" is shown to fall off as the reciprocal of the time squared.

Finally, an estimate is made of the effect of a non-uniform electron density and it is found that, provided the rate of decay is not too great, the cross-polarized backscatter and the directly-polarized backscatter arise from the same volume of the scatterer.

14. KEY WORDS

PRESS
scattering
plasma frequency
magnetic field
cylinders
electron density