RECOVERY OF VISUAL DISCRIMINATION AFTER HIGH INTENSITY FLASHES OF LIGHT

AD631207

SANFORD L. SEVERIN, Captain, USAF (MC)

Ophthalmology Branch

CLEARINGHOUSE
FOR FEDERAL SCIENTIFIC AND
TECHNICAL INFORMATION

Hardcopy	Microfiche		
$1.60	$0.50	12 pp	as

ARCHIVE COPY

Code 1

62-16

DDC
RECEIVED
APR 25 1966
C

SCHOOL OF AEROSPACE MEDICINE
USAF AEROSPACE MEDICAL CENTER
BROOKS AIR FORCE BASE, TEXAS

December 1961

7751-67061

AFPS SA SEP 63, 300

RECOVERY OF VISUAL DISCRIMINATION AFTER HIGH INTENSITY FLASHES OF LIGHT

A new technic for the study of flash blindness is described, utilizing the Meyer-Schwickerath Zeiss light coagulator as a source of high intensity light flashes. Four subjects were exposed to illuminations ranging from 645 lux to 56,180 lux as measured at the corneal plane. Recovery was measured as the period of time required after dazzle to regain sufficient visual discrimination to perceive testing luminances of 0.06 ft.—L. and 0.013 ft.—L. The experimental results are discussed, and the potential of this apparatus in studying the phenomenon of flash blindness is emphasized.

Scientific advances in nuclear physics and astronautics have given man the capability to produce atomic explosions and will soon enable him to explore extraterrestrial space. Operations in each of these areas present situations that will be hazardous to the vision of those involved due to exposure to light of a high intensity. The magnitude of this problem can be appreciated by the demonstration that a 20 KT nuclear weapon can produce a retinal burn in human subjects who are at least 36.3 miles from a detonation during the day and 40 miles at night (14). Strughold and Ritter have calculated that an astronaut in a solar orbit will be exposed to light of an intensity of about 10^6 lux at the orbit of Mercury and that an exposure to solar radiation of 140,000 lux at a distance just beyond the earth's atmosphere will be sufficient to cause a retinal burn in less than ten seconds (13, 18, 19).

This matter is of considerable interest to the military because there are many situations in which an observer is required to discriminate details of a dimly illuminated object shortly after exposure to a more highly illuminated field such as is considered here. The pilot of a high performance jet bomber must be able to read his instrument panel even if exposed to the flash of a small atomic weapon, and an astronaut who is dazzled as his space craft enters the bright portion of the orbit must retain visual discrimination. If instruments cannot be read during a critical phase of the mission, the results may be disastrous.

Received for publication on 25 July 1961.

Unfortunately, there has been little scientific effort directed toward elucidating the parameters of visual impairment from such exposures. This situation is probably due to the fact that until recently there has been no pragmatic requirement to explore this area and there have been few light sources capable of producing the necessary flash intensity.

This study is an attempt to evaluate the efficacy of using the Zeiss light coagulator as an experimental light source and to estimate the time relationship between exposure to high intensity illumination and visual recovery.

BACKGROUND

The danger to the eyes from exposure to intense light fields has been well documented in case reports of eclipse blindness (8). The testing of atomic weapons resulted in additional cases of retinal burns from unprotected ocular exposure to the flash of the fireball (12, 15). Animal experimentation has established the concept that the mechanism is the same in both cases (21). Visible light is concentrated upon the retina by the optical system

of the eye, forming an image of thermal intensity as the light is absorbed by the retinal pigment and is converted into heat. If a critical amount of heat is generated, irreversible coagulative destruction occurs (14).

In many situations the energy absorbed will not be adequate to produce a retinal burn, but the effects of the light will be sufficient to cause an alteration in the sensitivity of the retina. In this case, transient visual impairment will result, lasting until the eye can readapt. The duration and profoundity of this effect have not been completely delineated.

Before World War II several investigators attempted to relate the intensity of light flashes to the alterations in sensitivity of the dark-adapted eye. Their experiments utilized illuminances of less than 50 lumens/square foot. They found no alteration in the course of dark adaptation and a general correlation with the reciprocity law for momentary losses of sensitivity (1, 20). The reciprocity law indicates that within certain limits $L \times T = K$ (L = units of luminance of the dazzle; T = duration of the dazzle). This expresses a total summation with the effect being the same for a luminance decreased by one half but maintained twice as long and one increased twice but lasting half as long (11).

During World War II there was considerable interest in protecting aviators from the glare of searchlights and sunlight. Technics were devised to minimize the dazzle. Furthermore, it was recommended that all personnel who were to fly night missions wear sunglasses the day of the mission to protect their dark adaptation (2, 17).

The development of the atomic weapon, with its attendant hazards, provided impetus for further investigation. Crawford, in 1946 (3), and Fry, in 1951 (5), utilized a light source of moderate intensity and confirmed the validity of the law of reciprocity. Whiteside, in 1952, attempted to simulate the dazzling effect of an atomic explosion at night, using the sun as a light source (22). Several years later he reported on a method whereby he visualized the flash of a 20 KT explosion, measured his recovery, and reported the time required to regain visual discrimination (23).

Metcalf and Horn reported an investigation they made on the effects of high intensity light flashes on visual recovery. By studying light intensities ranging from 60 to over 12,000 lumens/square foot at the eye on the visual recovery of four subjects, they found that recovery time plotted against illumination at the eye produced a straight-line curve in a semilog plot. Then by extrapolating this data to the estimated retinal burn threshold they found that a maximal recovery time of 170 seconds was needed to read standard red-lighted aircraft instruments (10).

These experiments have provided a basic store of knowledge from which future research can be designed to further elucidate the mechanism of flash blindness and the parameters of recovery.

METHODS AND MATERIALS

Zeiss light coagulator

This investigation utilizes the Meyer-Schwickerath Zeiss light coagulator as a light source. The apparatus has been used clinically to treat ocular disease, but no previous reports have described its use as an experimental tool in the study of flash blindness. The instrument is highly reliable and has the capability of producing a large range of light intensities. The source is a xenon super-pressure lamp operating at a pressure of 20 atmospheres. The image is formed by means of a lens system (fig. 1), with parallel light rays exiting at the objective. The apparatus is customarily fitted with a movable eyepiece so that the light beam can be converged and aimed at a region to be treated.

Minor modifications were made for this experiment: (1) The movable eyepiece was not utilized. (2) Convexoconcave lenses were attached to the nose cone to diverge the emitted

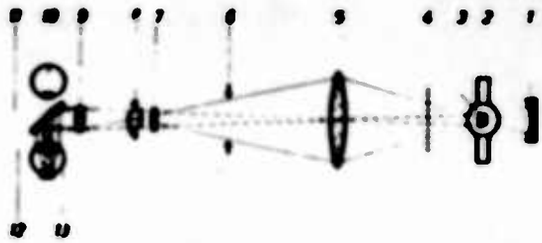

Beam path in the light coagulator

1. Concave mirror
2. Xenon lamp
3. Luminous sleeve
4. Perforation diaphragm
5. Condenser
6. Iris diaphragm
7. Filter disc
8. Image field diaphragm
9. Objective
10. Eye of physician
11. Mirror apertures
12. Eye mirror
13. Eye of patient

FIGURE 1

Optical system of Meyer-Schwickerath light coagulator.

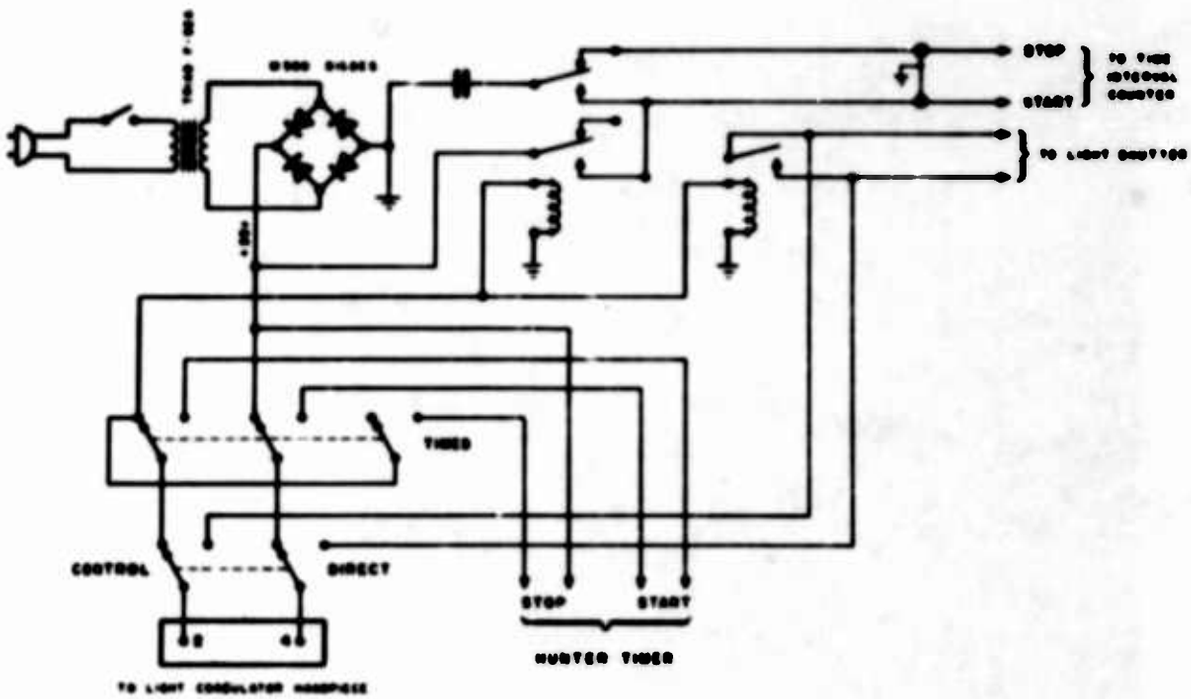

FIGURE 2

Wiring of the timing circuit of the light coagulator.

light. (3) A solid diaphragm was substituted for the perforated diaphragm (fig. 1, No. 4). This eliminated the focusing directional light that is used in the clinical situation. (4) A Hunter timer was fitted to the shutter to provide a range of shutter speeds. The wiring of the timing circuit is diagrammed in figure 2. The light beam was directed at a diffusion screen positioned in front of the subject. The diameter of the flash pattern on the screen was 33 cm. This produced a cone of light subtending 63°20′ at the eye of the subject. Figure 3 illustrates the coagulator and the positioning of the recording instruments.

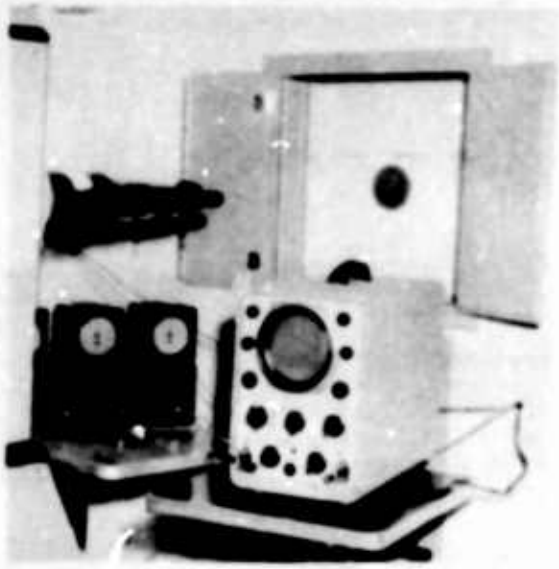

FIGURE 3

The light coagulator and recording instruments.

Photometry

To quantitate the energy of the test flash, a method of measuring light intensity was devised, utilizing a Hewlett-Packard, Model 130B, oscilloscope and a Weston, Model 756, illumination meter for calibration. The initial step in the procedure consisted in comparing the Weston photometer reading for a given level of illumination to the oscilloscopic reading in volts when the signal from the Weston head was fed into the oscilloscope. A 500-watt projection bulb and the Zeiss coagulator were used alternately as light sources.

A range of intensities was measured and a nomogram was drawn from which one could interpolate the value of an unknown light intensity from the voltage reading produced when the light was received by the Weston head and the signal produced fed into the oscilloscope.

Testing

A Goldman-Weekers adaptometer was used for evaluating recovery. The testing stimulus was a patch 25 mm. in diameter presented as a light flashing on and off at one-second intervals. Testing patch luminances of 0.06 and 0.013 ft.-L. were used. A dim, red fixation

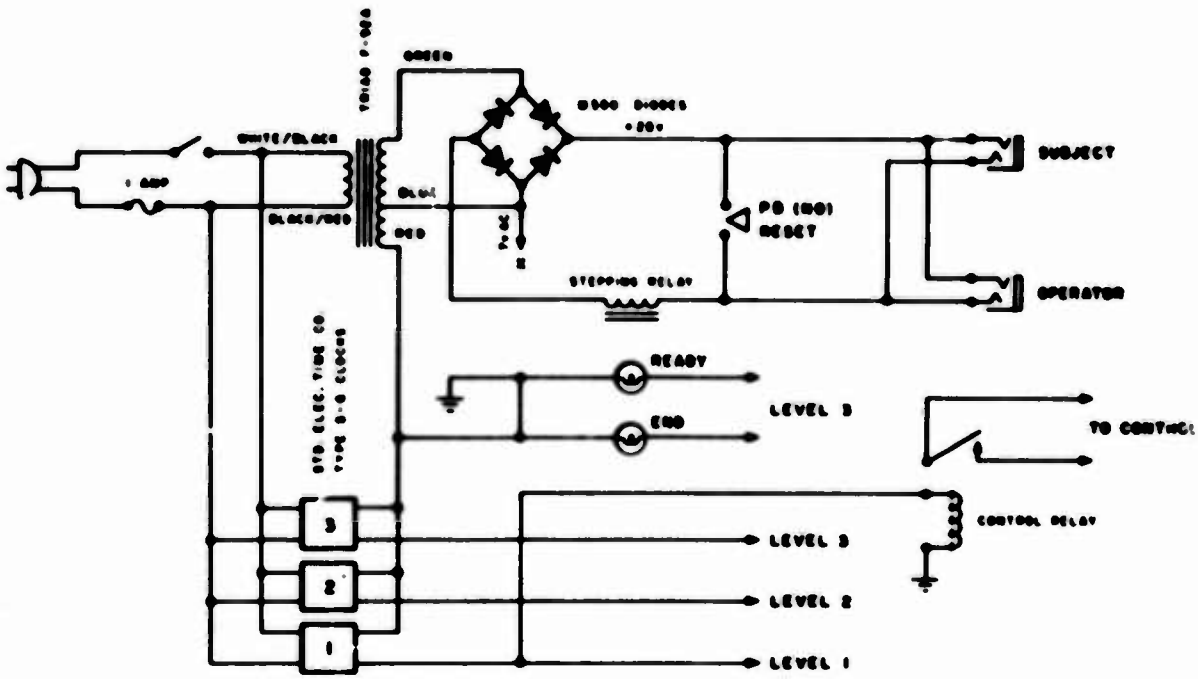

FIGURE 4

Wiring of the visual recovery timer.

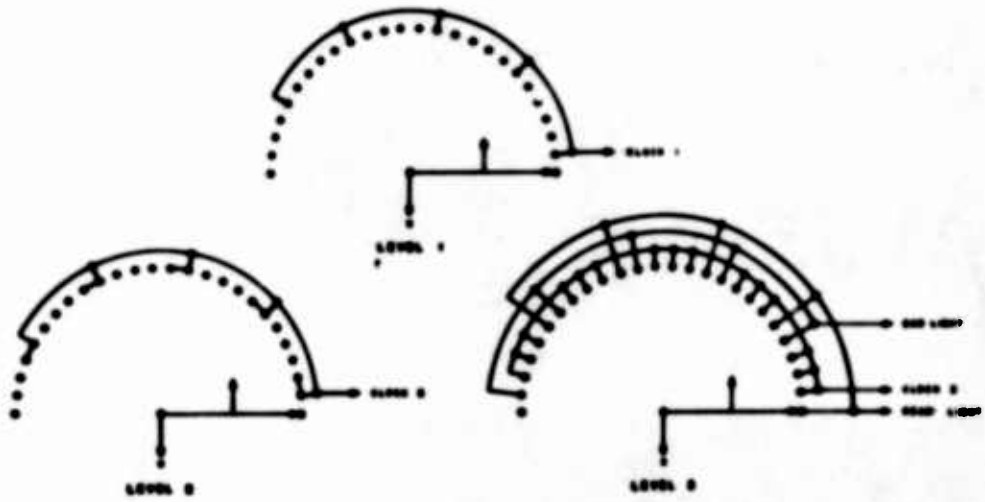

FIGURE 5

Details of the stepping switch of the visual recovery timer.

point was located 4.5 cm. above the testing patch. The visual angle subtended by the testing patch at the subject's eye was 40′.

Timing circuits

The subject's recovery time was measured on standard S-6 electric timer clocks connected in circuit to the coagulator. The timing clocks were started when the shutter opened to produce the light flash and were stopped by the subject when he saw the testing stimulus. Figure 4 is a diagram of the wiring of the timing clocks. Figure 5 is a diagram of the details of the stepping switch of the timer.

Subjects

Four subjects were used in this experiment. Two were flight surgeons who had passed a flying Class II physical. One was a pilot who had passed a flying Class I physical. The fourth was an ophthalmologist on the staff. No subject had a visual acuity poorer than 20/25.

Procedure

Before each subject was tested his left pupil was dilated with a 1 percent paradrine solution. Each subject was preadapted ten minutes in a dark room before each test flash and then, preparatory to testing, was positioned with his chin in a chin rest with the left eye centered three inches from the diffusion screen. The Weston meter head was placed before the right eye.

The light intensity for the test flash had been adjusted before the flash so that the subject did not know which of the light intensities he was to be exposed to. The subject's position is indicated in figure 6.

After the subject had been properly positioned with both eyes closed, he was instructed to open his left eye. The flash was triggered and simultaneously the timing clocks were started. All test flashes had a duration of 0.15 second.

The subject then turned toward the Goldman-Weekers adaptometer. Initially, there was no form perceivable through the bright scotoma that had been induced. As the scotoma dimmed, the fixation point could be seen through the after-image, and finally the blinking testing pattern became apparent. When the subject could discriminate two flashes of the 0.06 ft.-L. testing patch, he pressed a button, stopping clock one. The 0.013 ft.-L. patch was then introduced, and the subject

FIGURE 6

Subject in position to be dazzled.

continued to view until he could detect the further reduced contrast of the testing stimulus.

The impulse generated through the Weston head that was in position before the right eye was directed into the oscilloscope, and a photograph of the pulse was made with a Fairchild oscilloscope camera. In this way a permanent record was made of the flash, and the intensity of each flash could be confirmed from the nomogram. The diameter of the subject's dilated pupil was measured after each experimental run. Figure 7 is a block schematic of the relative positions of all instruments used in this investigation.

RESULTS

Four subjects were exposed to light flashes ranging over five levels of illuminance: 645 lux (50 lumens/ft.^{2}); 5,380 lux (500 lumens/ft.^{2}); 10,760 lux (1,000 lumens/ft.^{2}); 26,900 lux (2,500 lumens/ft.^{2}); and 56,180 lux (5,500 lumens/ft.^{2}), as measured at the corneal plane. Each flash had a duration of 0.15 second. The subjects were tested randomly a total of five times at each level of illumination. Recovery was measured as the period of time required after a dazzle for a subject to regain sufficient visual discrimination to perceive testing luminances of 0.06 and 0.013 ft.–L.

Figure 8 is a graph of recovery time to perceive the 0.06 ft.–L. patch plotted as a function of flash illumination at the eye.

Figure 9 is an analogous plot for the 0.013 ft.–L. testing patch.

In both graphs each point plotted represents the mean value for the five exposures at an intensity.

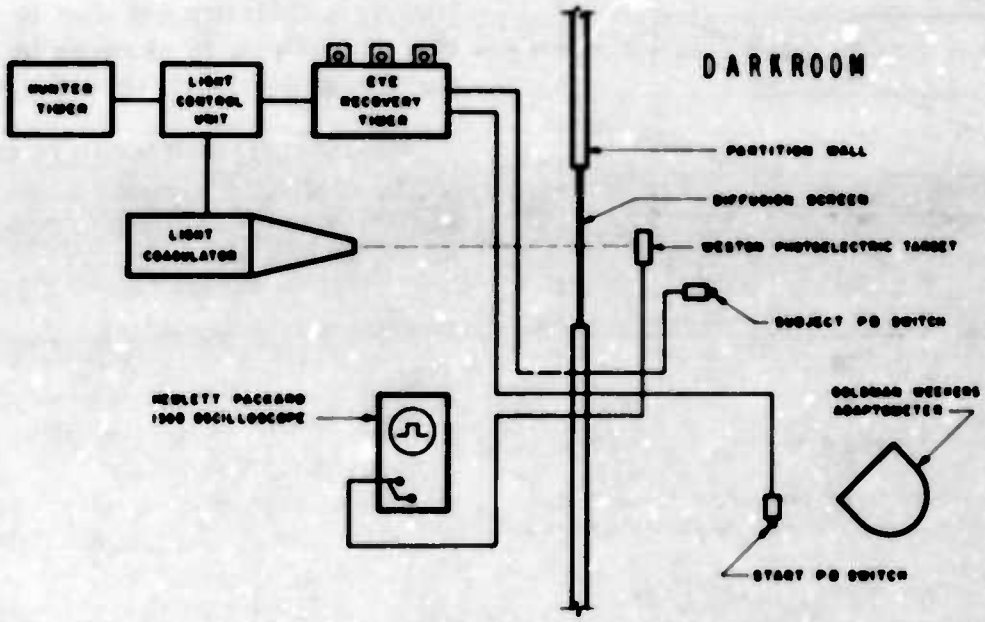

FIGURE 7

Block schematic of the instruments used in testing.

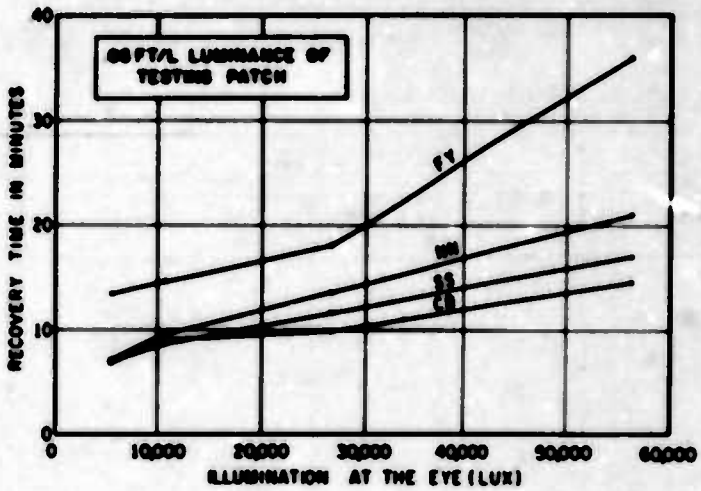

FIGURE 8

Graph of recovery time to the 0.06 ft.-L. testing patch plotted as a function of flash illumination at the eye.

The mean recovery times are recorded in table I. An analysis of the data was performed and a standard error of the mean computed for the average values at each intensity.

Statistical analysis demonstrated that the variation between subjects was generally greater than that within subjects, indicating that the subjects responded differently. The

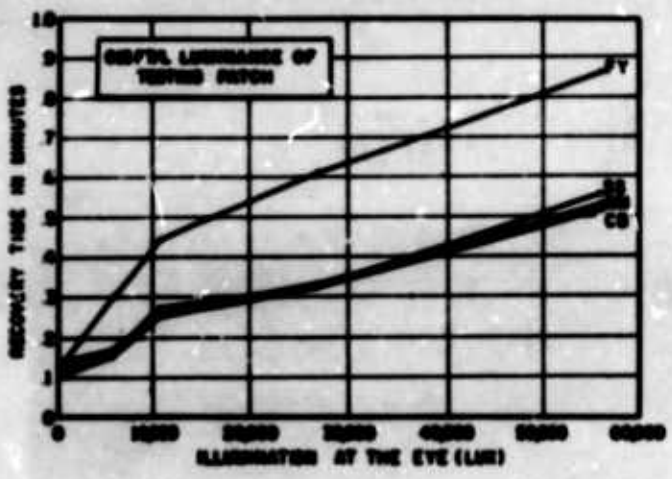

FIGURE 9

Graph of recovery time to the 0.013 ft.-L. testing patch plotted as a function of the flash illumination of the eye.

analysis also indicated that recovery time increased significantly with increasing flash intensity. The data were also examined to determine whether there was interaction between the intensity of the test dazzle and the brightness of the testing patch. An interaction was found: The response to increasing intensity of the test dazzle was significantly different for the two testing luminances. Examination of the table of mean values shows that this difference is due to time increasing more rapidly with changes in dazzle intensity for the duller patch than for the brighter.

Regression analyses were done on the data in the original form and on a scale transforming the results into log form. These analyses demonstrated no consistent trend.

DISCUSSION

This study is the initial attempt at testing the equipment discussed here to investigate the phenomenon of flash blindness. The experiment was designed to determine whether this optical system can be used effectively as a research tool and to determine whether the functional visual loss following dazzle is a consistent phenomenon that can be accurately measured.

The results follow a pattern that would be anticipated from previous reports (3, 5, 10, 22, 23). Two trends are apparent: (1) Recovery time is increased with increasing intensity of

TABLE I

Mean recovery times (minutes)

Testing patch brightness	Subject	Illumination at the eye (lux)				
		645	5,380	10,760	26,900	56,180
0.06 ft.-L.	CB	.059	.072	.092	.100	.145
	NN	.057	.074	.096	.137	.211
	SS	.064	.070	.087	.118	.171
	FY	.064	.135	.146	.182	.361
Standard error*		.004	.004	.005	.006	.009
0.013 ft.-L.	CB	.110	.155	.257	.326	.520
	NN	.142	.177	.260	.335	.536
	SS	.126	.165	.274	.329	.567
	FY	.144	.309	.444	.614	.865
		.005	.005	.008	.013	.021

*Standard error is appropriate for the four means directly above it.

TABLE II

Probability results for "F" test, testing interaction between variables

	DF	MS	F	P
Subject	3	.044182		
Flash intensity	4	.128174	30.88	.001
Subject × flash intensity	12	.004150		
Testing patch brightness (TPB)	1	.443945	52.28	.01
TPB × subject	3	.008491		
TPB × flash intensity	4	.034182	30.11	.001
TPB × flash intensity × subject	12	.00874		

Mean recovery times (average for four subjects)

Testing patch brightness	Illumination at the eye (lux)				
	645	5,380	10,760	26,900	56,180
0.06 ft.-L.	.061	.088	.106	.134	.222
0.013 ft.-L.	.136	.202	.300	.401	.622

the test flash. (2) The time of functional visual loss following a dazzle is decreased by increasing the luminance of the task to be viewed. The significance of the results is confirmed by statistical analysis. The analysis also indicates that the variation within a subject's responses are within acceptable limits for biologic experimentation.

An uncontrolled variable in this study was the pupillary size of the subjects. The left pupil was dilated with paradrine before testing and the pupillary aperture measured after each test run. Measurements ranged from 7 to 10 mm. An attempt was made to relate pupillary diameter to the recovery time of a subject but there was no consistent pattern in this regard.

Theoretical speculation on the type of function to expect when recovery time is plotted against flash intensity is difficult because of the complexity of the process of readaptation. The light flash may be considered as an intense stimulus flooding the eye with light and provoking an experience of dazzle wherein vision is impossible. Following this, there is a series of bright after-images of sufficient intensity to obliterate other impressions, thus forming a relative scotoma in the field of vision.

The visual sensation produced in this situation has been generally accepted to be produced by a photochemical reaction in the retina, depending upon the decomposition of visual purple (rhodopsin) in the rods and another pigment, perhaps iodopsin, in the cones (4, 6, 7, 9, 16).

Elucidation of the retinal process in this type of testing is further complicated by differences in reaction time between subjects and the time required to assimilate and interpret sensory input data. Although the magnitude of this variation is currently unknown, it may be significant as another criterion to be used in selecting candidates for space flights, since it would be desirable to select those whose recovery from dazzle would be most rapid.

SUMMARY

A study was designed to determine whether the Meyer-Schwickerath Zeiss light coagulator can be used effectively as a research tool to investigate the phenomenon of flash blindness and to determine whether the functional visual loss following dazzle is a phenomenon that can be accurately measured.

The experiment confirmed the effectiveness and reliability of the use of the light coagulator. The results also indicated that recovery from dazzle is consistent and repetitive within acceptable units for biologic experimentation. The need for future experimentation to clearly define the recovery function and degree of intersubject variation is emphasized.

The author expresses sincere appreciation to Major James F. Culver and Captain Norris L. Newton, of the Ophthalmology Branch, who gave the advice and technical support that was necessary to complete this project. The assistance of D. Sears, of the Bioelectronics Laboratory, Dr. P. Crump, of the Biometrics Branch, and Lieutenant Colonel R. B. Payne, of the Medical Research Division, is also appreciated.

REFERENCES

1. Allen, L. K., and K. M. Dallenbach. The effect of light flashes during the course of dark adaptation. Amer. J. Psychol. 51:540-548 (1938).

2. Clark, W. B., M. L. Johnson, and R. E. Dreher. The effect of sunlight on dark adaptation. Amer. J. Ophthal. 29:828-836 (1946).

3. Crawford, B. H. Photochemical laws and visual phenomena. Proc. Roy. Soc. (Biol.) 133:63-75 (1946).

4. Duke-Elder, W. A. Textbook of ophthalmology, vol. I. St. Louis: C. V. Mosby & Co., 1942.

5. Fry, G. A., and M. Alpern. Effects of flashes of light on night visual acuity. WADC TR-52-10, pt. I, Nov. 51.

6. Hecht, S. The photochemical nature of the photosensory process. J. Gen. Physiol. 3:229-246 (1920).

7. IES Lighting Handbook, 2d ed. Illuminating Engineering Society, 1952.

8. Irvine, S. R. Review of solar retinitis as it may pertain to macular lesions seen in personnel of the armed forces. Amer. J. Ophthal. 28:1158-1165 (1945).

9. Jayle, G. E., A. G. Ourgand, L. F. Barsinger, and W. J. Holmes. Night vision. Springfield, Ill.: Charles C Thomas, 1957.

10. Metcalf, R. D., and R. E. Horn. Visual recovery times from high intensity flashes of light. WADC TR-58-232, Oct. 58.

11. Mote, F. A., and A. J. Riopelle. The effect of varying the intensity and the duration of pre-exposure upon the foveal dark adaptation in the human eye. J. Gen. Physiol. 34:657-674 (1951).

12. Oyama, A., and T. Sasaki. A case of burn of the cornea and retina by the atomic bomb. Ganya Rinsho Tho. 40:177 (1946).

13. Ritter, O. L. The sun's retina burning power in space. Proc. Internat. XI Congress Astronautical Federation, Stockholm, 1960. (In press)

14. Byrnes, V. A., D. V. L. Brown, H. W. Rose, and P. A. Cibis. Chorioretinal burns produced by atomic flash. Arch. Ophthal. 53:351-361 (1955).

15. Rose, H. W., et al. Human chorioretinal burns from atomic fireballs. Arch. Ophthal. 55:205-210 (1956).

16. Rushton, W. A. N., and R. D. Cohen. Visual purple level and the course of dark adaptation. Nature 173:301-302 (1954).

17. Stiles, W. S. Wartime problems of glare and dazzle. Brit. Med. Bull. 5:50-52 (1946).

18. Strughold, H., and O. L. Ritter. Eye hazards and protection in space. Aerospace Med. 31:670-673 (1960).

19. Strughold, H., and O. L. Ritter. Solar irradiance from Mercury to Pluto. Aerospace Med. 31:127-130 (1960).

20. Suchman, E. A., and H. P. Weld. The effect of light flashes during the course of dark adaptation. Amer. J. Psychol. 51:717-722 (1938).

21. Verhoeff, F. H., L. Bell, and C. B. Walker. The pathological effects of radiant energy on the eye. Proc. Amer. Acad. of Arts and Sciences 51:630 (1916).

22. Whiteside, T. C. D. The dazzle effect of an atomic explosion at night. Flying Personnel Research Committee Report No. 787.

23. Whiteside, T. C. D. The observation and luminance of a nuclear explosion. Flying Personnel Research Committee Report No. 1075.1.