AEDC-TR-66-21

ARCHIVE COPY
DO NOT LOAN

OCT 8 1970

SCALING OF ISOTHERMAL SIMPLE-SHAPED BODIES IN A TRANSIENT TEMPERATURE ENVIRONMENT

D. L. Adkins

ARO, Inc.

PROPERTY OF U. S. AIR FORCE
AEDC LIBRARY
AF 40(600)1200

April 1966

Distribution of this document is unlimited.

PROPERTY OF U. S. AIR FORCE
AEDC LIBRARY
AF 40(600)1200

AEROSPACE ENVIRONMENTAL FACILITY

ARNOLD ENGINEERING DEVELOPMENT CENTER

AIR FORCE SYSTEMS COMMAND

ARNOLD AIR FORCE STATION, TENNESSEE

AEDC TECHNICAL LIBRARY
5 0720 00031 2282

NOTICES

When U. S. Government drawings specifications, or other data are used for any purpose other than a definitely related Government procurement operation, the Government thereby incurs no responsibility nor any obligation whatsoever, and the fact that the Government may have formulated, furnished, or in any way supplied the said drawings, specifications, or other data, is not to be regarded by implication or otherwise, or in any manner licensing the holder or any other person or corporation, or conveying any rights or permission to manufacture, use, or sell any patented invention that may in any way be related thereto.

Qualified users may obtain copies of this report from the Defense Documentation Center.

References to named commercial products in this report are not to be considered in any sense as an endorsement of the product by the United States Air Force or the Government.

SCALING OF ISOTHERMAL SIMPLE-SHAPED BODIES IN A TRANSIENT TEMPERATURE ENVIRONMENT

D. L. Adkins
ARO, Inc.

Distribution of this document is unlimited.

AF - AEDC
Arnold AFB Tenn

FOREWORD

The work reported herein was done at the request of the National Aeronautics and Space Administration (NASA), Marshall Space Flight Center (MSFC), Huntsville, Alabama, under Program Element 65402234.

The results of this test were obtained by ARO, Inc. (a subsidiary of Sverdrup and Parcel, Inc.), contract operator of the Arnold Engineering Development Center (AEDC), Air Force Systems Command (AFSC), Arnold Air Force Station, Tennessee, under Contract AF 40(600)-1200. The test was conducted from June 1 to 15, 1965, under ARO Project No. SA0412, and the manuscript was submitted for publication on January 4, 1966.

The author wishes to acknowledge the assistance of Billy P. Jones and James K. Harrison of NASA-MSFC for their work in developing the modeling relations used in the test body designs.

This technical report has been reviewed and is approved.

William D. Clement
Major, USAF
AF Representative, AEF
DCS/Test

Jean A. Jack
Colonel, USAF
DCS/Test

ABSTRACT

Thermal modeling was performed with a flat plate, sphere, and cylinder. These aluminum bodies were located in a relatively close array. Electrical resistance heaters in the plate and sphere provided the external heat sources. The temperature distributions on the body surfaces were small enough to permit an isothermal assumption. A theoretical design analysis of the system was conducted and is discussed. Chamber testing consisted of eight continuous hours of 2-hr intervals of heating and cooling cycles in a pressure range of 10^{-7} torr.

CONTENTS

		Page
	ABSTRACT	iii
	NOMENCLATURE	v
I.	INTRODUCTION	1
II.	APPARATUS	1
III.	THEORETICAL DERIVATIONS	2
IV.	PROCEDURE	5
V.	RESULTS AND DISCUSSION	5
VI.	CONCLUSIONS	6
	REFERENCES	7

ILLUSTRATIONS

Figure		
1.	ARC 7V Chamber	9
2.	Prototype and Model Test Bodies	10
3.	Test Body Configuration	11
4.	Test Body Specifications and Thermocouple Locations	12
5.	Chamber Installation of Prototype Bodies	13
6.	Chamber Installation of Scaled Bodies	14
7.	Temperature-Time Characteristics of a Flat Plate, Sphere, and Cylinder	15

TABLE

I.	Parameter Modeling Relations	16

NOMENCLATURE

A_j^s	Surface area exposed to solar irradiation, ft^2
b	Cylinder end cap thickness, ft
C_j	Thermal capacitance of body "j", Btu/°R

C_{kj}	Thermal conductance between bodies "k" and "j", Btu/hr
C_p	Specific heat of material, Btu/lb-°R
d	Heater plate thickness, ft
F_{kj}	Geometrical shape factor
h	Cylinder length, ft
L	Heater plate length, ft
q_j	Input heat to body "j", Btu/hr
R_{kj}	Thermal radiation resistance between bodies "k" and "j", Btu/hr
r_1	Inside sphere radius, ft
r_2	Outside sphere radius, ft
r_3	Inside cylinder radius, ft
r_4	Outside cylinder radius, ft
S	Solar constant, 442 Btu/hr-ft^2
T_j	Temperature of body "j", °R
T_k	Temperature of body "k", °R
t	Time, hr
W	Heater plate width, ft
α_j	Thermal absorptance of solar irradiation
β_j, γ_j, δ_j, η_j, θ, ϕ_k, λ_j, ω, μ_{kj}, ρ_{kj}	Scaling proportionality constants

SUBSCRIPTS

j, k	Bodies
*	Model nomenclature

SECTION I
INTRODUCTION

The purpose of work in thermal similitude is to develop and evaluate modeling relations and techniques for application in scaling spacecraft and equipment. Usually, parallel developments of scaling relations approach similar end results. However, some techniques are more adaptable to a particular configuration than others. Generally, in actual scaling work, the more parameters and conditions that may be preserved between the prototype and model, the less difficult the job. Also, test result accuracy may be improved with the conservation of individual scaling parameters.

It is very unlikely that a complex spacecraft will be scaled in its entirety. However, component systems may be extracted and studied if their immediate environment can be reproduced. Conditions can occur such that bodies located relatively close to each other exhibit distinct independent temperature characteristics. These bodies may have only minor temperature gradients over their continuous surfaces. Therefore, it is desirable to scale isothermal bodies undergoing transient temperature conditions.

The following work is concerned with the study of isothermal bodies with internal cycled heat sources. This work was performed in conjunction with a thermal modeling program at Marshall Space Flight Center, Huntsville, Alabama. The testing was conducted in the Aerospace Research Chamber (7V), AEDC.

SECTION II
APPARATUS

2.1 AEROSPACE RESEARCH CHAMBER (7V)

The ARC (7V) is a horizontal, stainless steel, cylindrical vacuum chamber, 7 ft in diameter and 12 ft in length, Fig. 1. The chamber pumping system consists of two parallel networks of 32- and 6-in. diffusion pumps in series, backed up with a mechanical forepump. A liquid-nitrogen (LN_2)-cooled shroud completely lines the chamber, providing a 350-ft^2 heat sink at 140°R.

2.2 TEST CONFIGURATIONS

The prototype and model test arrays consisted of an aluminum flat plate, sphere, and cylinder (see Fig. 2). The bodies were located in a close group but not in physical contact with each other. Heaters were located in the plate and sphere, Fig. 3. The plate heater was a resistance wire embedded in the plate rear surface. The spherical heater was a resistance wire wrapped on a bird-cage-type frame. The heaters used a-c power which was controlled with variable transformers. The linear dimensions and thermocouple locations of the test articles are shown in Fig. 4.

The surfaces of the test articles were coated with lamp black to minimize specular effects.

The test body temperature distributions were monitored with copper-constantan thermocouples peened into the body surfaces. The flat plate, sphere, and cylinder contained 10, 16, and 6 thermocouples, respectively. The thermocouples were arranged in a symmetrical pattern over the body surfaces. The thermocouple output signals were recorded on a digital recorder. Chamber installation of the prototype and model arrays is shown in Figs. 5 and 6.

SECTION III
THEORETICAL DERIVATIONS

The theoretical development of the following relationships represents work that has been conducted on isothermal segments (see Ref. 1).

The summation of energy exchange on a body of uniform temperature in a nonconvective environment may be expressed by:

Prototype

$$\frac{C_j \Delta T_j}{\Delta t} = \sum_{\substack{k=1 \\ k \neq j}}^{n} C_{kj} \left(T_k - T_j\right) + \sum_{\substack{k=1 \\ k \neq j}}^{n} R_{kj} \left(T_k^4 - T_j^4\right) + q_j + A_j^s \alpha_j S \qquad (1)$$

Model

$$\frac{C_j^* \Delta T_j^*}{\Delta t^*} = \sum_{\substack{k=1 \\ k \neq j}}^{n} C_{kj}^* \left(T_k^* - T_j^*\right) + \sum_{\substack{k=1 \\ k \neq j}}^{n} R_{kj}^* \left(T_k^{4*} - T_j^{4*}\right) + q_j^* + A_j^{s*} \alpha_j^* S^* \qquad (2)$$

For definition of similarity between prototype and model, the following relations must be written:

$$T_j = \beta_j T_j^* \qquad T_k = \phi_k T_k^*$$

$$q_j = \gamma_j q_j^* \qquad C_j = \lambda_j C_j^*$$

$$A_j^s = \delta_j A_j^{s*} \qquad t = \omega t^*$$

$$\alpha_j = \eta_j \alpha_j^* \qquad C_{kj} = \mu_{kj} C_{kj}^*$$

$$S = \theta S^* \qquad R_{kj} = \rho_{kj} R_{kj}^*$$

where (*) denotes model and where j and k = 1 ····· n and $k \neq j$, and β_j, γ_j, δ_j, η_j, θ, ϕ_k, λ_j, ω, μ_{kj}, ρ_{kj} are proportionality constants and are normally unequal.

Substitution of these relations into Eq. (1) and grouping the scale factors, a relationship is developed of the form:

$$\left(\frac{\lambda_j \beta_j}{\omega}\right) \frac{C_j^* T_j^*}{\Delta t^*} = \sum_{\substack{k=1 \\ k \neq j}}^{n} \left\{(\mu_{kj}\phi_k) T_k^* - (\mu_{kj}\beta_j) T_j^*\right\} C_{kj} + \sum_{\substack{k=1 \\ k \neq j}}^{n} \left\{(\rho_{kj}\phi_k^4) T_k^{4*} - (\rho_{kj}\beta_j^4) T_j^{4*}\right\} R_{kj}^* + (\gamma_j) q_j^* + (\delta_j \eta_j \theta) A_j^{s*} S * \alpha_j^* \tag{3}$$

Then if Eq. (3) is identical to Eq. (2), which must be the case for similarity between prototype and model,

$$\frac{\lambda_j \beta_j}{\omega} = \mu_{kj}\phi_k = \mu_{kj}\beta_j = \rho_{kj}\phi_k^4 = \rho_{kj}\beta_j^4 = \gamma_j = \delta_j \eta_j \theta$$

If each term is normalized with every other term of the system, the following 21 similarity ratios are developed:

$$\frac{\alpha_j A_j^s S t}{C_j T_j} = \frac{\alpha_j^* A_j^{s*} S^* t^*}{C_j^* T_j^*} \qquad \frac{R_{kj} T_j^3 t}{C_j} = \frac{R_{kj}^* T_j^{3*} t^*}{C_j^*}$$

$$\frac{C_{kj} T_k t}{C_j T_j} = \frac{C_{kj}^* T_k^* t^*}{C_j^* T_j^*} \qquad \frac{q_j t}{C_j T_j} = \frac{q_j^* t^*}{C_j^* T_j^*}$$

$$\frac{C_{kj} t}{C_j} = \frac{C_{kj}^* t^*}{C_j^*} \qquad \frac{C_{kj} T_k}{\alpha_j A_j^s S} = \frac{C_{kj}^* T_k^*}{\alpha_j^* A_j^{s*} S^*}$$

$$\frac{R_{kj} T_k^4 t}{C_j T_j} = \frac{R_{kj}^* T_k^{4*} t^*}{C_j^* T_j^*} \qquad \frac{C_{kj} T_j}{\alpha_j A_j^s S} = \frac{C_{kj}^* T_j^*}{\alpha_j^* A_j^{s*} S^*}$$

$$\frac{R_{kj} T_k^4}{\alpha_j A_j^s S} = \frac{R_{kj}^* T_k^{4*}}{\alpha_j^* A_j^{s*} S^*} \qquad \frac{R_{kj} T_k^4}{C_{kj} T_j} = \frac{R_{kj}^* T_k^{4*}}{C_{kj}^* T_j^*}$$

$$\frac{R_{kj} T_j^4}{\alpha_j A_j^s S} = \frac{R_{kj}^* T_j^{4*}}{\alpha_j^* A_j^{s*} S^*} \qquad \frac{R_{kj} T_j^3}{C_{kj}} = \frac{R_{kj}^* T_j^{3*}}{C_{kj}^*}$$

$$\frac{q_j}{\alpha_j A_j^s S} = \frac{q_j^*}{\alpha_j^* A_j^{s*} S^*} \qquad \frac{q_j}{C_{kj} T_j} = \frac{q_j^*}{C_{kj}^* T_j^*}$$

$$\frac{T_j}{T_k} = \frac{T_j^*}{T_k^*} \qquad \frac{T_j^4}{T_k^4} = \frac{T_j^{4*}}{T_k^{4*}}$$

$$\frac{R_{kj} T_k^3}{C_{kj}} = \frac{R_{kj}^* T_k^{3*}}{C_{kj}^*} \qquad \frac{q_j}{R_{kj} T_k^4} = \frac{q_j^*}{R_{kj}^* T_k^{4*}}$$

$$\frac{R_{kj} T_j^4}{C_{kj} T_k} = \frac{R_{kj}^* T_j^{4*}}{C_{kj}^* T_k^*} \qquad \frac{q_j}{R_{kj} T_j^4} = \frac{q_j^*}{R_{kj}^* T_j^{4*}}$$

$$\frac{q_j}{C_{kj} T_k} = \frac{q_j^*}{C_{kj}^* T_k^*}$$

For the investigation presented in this report, the temperature, material, and surface conditions were preserved between the prototype and model. The external dimensions of the model were one-half the prototype. The heat source was an internal resistance heater located in the plate and sphere. With these conditions, the following statements are permitted (See Table I):

$$L^* = (1/2)L \qquad F_{kj}^* = F_{kj}$$

$$W^* = (1/2)W \qquad h^* = (1/2)h$$

$$T_j^* = T_j \qquad (\rho C_p)_j^* = (\rho C_p)_j$$

$$r_2^* = (1/2)r_2 \qquad t^* = t$$

$$r_4^* = (1/2)r_4$$

These requirements demand that some distortion be made in the model minor dimensions. If no solar energy is present, the following set of independent ratios may be selected from the 21 ratios listed:

$$\frac{T_j}{T_k}, \frac{\epsilon_j \sigma A_j T_j^3 t}{C_j}, \frac{R_{kj} T_j^3 t}{C_j}, \frac{q_j t}{C_j T_j}$$

With these relationships and the previous modeling conditions, it is determined that

$$d^* = d$$

$$b^* = b$$

$$r_3^* = k\frac{\sqrt{2}}{2} \approx 3,\ 0 < K < 1,\ K = \left[1 - 1/2\left(\frac{r_4}{r_3}\right)^2\right]^{1/2},\ \frac{r_4}{r_3} > 1$$

$$r_1^* = \frac{K}{4} r_1,\ 0 < K < 1,\ K = 2\left[2 - \left(\frac{r_2}{r_1}\right)^3\right]^{1/3},\ \frac{r_2}{r_1} > 1$$

$$q_1^* = (1/4)\, q_1$$

$$q_2^* = (1/4)\, q_2$$

From these relationships (summarized in Table I) the models were designed. Actual dimensions of the prototypes and models are listed in Fig. 4.

SECTION IV
PROCEDURE

The prototype testing procedure consisted of eight continuous hours of cyclic heating of the test body array. Two-hour intervals of on and off heater operation were conducted.

Prior to testing, the chamber was evacuated to the mid 10^{-4} torr range with the mechanical and diffusion pumps. The test was initiated by energizing the heaters and LN_2 liner simultaneously. The power levels of the plate and sphere heaters were set at 1053 and 400 w, respectively.

The model test was very similar to the prototype. The particular difference was the heater input power level. This parameter was modified in accordance with the modeling relations, Table I.

The testing environment of the prototype and model was 10^{-8} torr pressure and 150°R surroundings.

SECTION V
RESULTS AND DISCUSSION

Representative transient temperature data from each test body are plotted in Fig. 7. The additional thermocouples exhibited very

similar characteristics but were not plotted for purposes of data representation clarity.

Deviations did occur between the prototype and model data. These variations seem to be most prevalent in the cooling part of the cycle. The largest deviation occurred on the rectangular plate, which was a maximum of approximately 13 percent.

There are two probable reasons for this occurrence. When fabricating the plate and heater, electrical insulating cement was used for fastening the heater wire in the plate. The volume of cement to be used in the model was scaled in accordance with the scaling relations. However, this quantity was insufficient for the heater to function satisfactorily. Additional cement was used, changing the ratio of the thermal capacitance between the prototype and model. If the thermal capacitance was increased in the model, a slower cooldown rate would occur. This appears to be what happened in this test. The other possible cause of error may have been the uncooled area of the chamber around the diffusion pump inlets. This is a 20-in.-wide strip which extends the total length of the chamber. As the model size is decreased, the configuration factor is increased between the model and the uncooled area. This would have decreased the rate of energy exchange because of the high temperature of the chamber wall and would have produced a higher stabilization temperature. There may be additional phenomena contributing to this difficulty. However, it is believed the two reasons discussed encompass most of the problem.

SECTION VI
CONCLUSIONS

The results of this study verify that thermal modeling can be performed if the time and the model material, surface conditions, and geometric shape, are similar.

Since the scaling of time is usually an important asset in modeling, the effectiveness of this approach might be questionable in some applications. For other situations this technique could possibly be an effective method.

REFERENCES

1. Jones, Billy P. "Thermal Similitude Studies." Journal of Spacecraft and Rockets, Vol. 1, July - August, 1964.

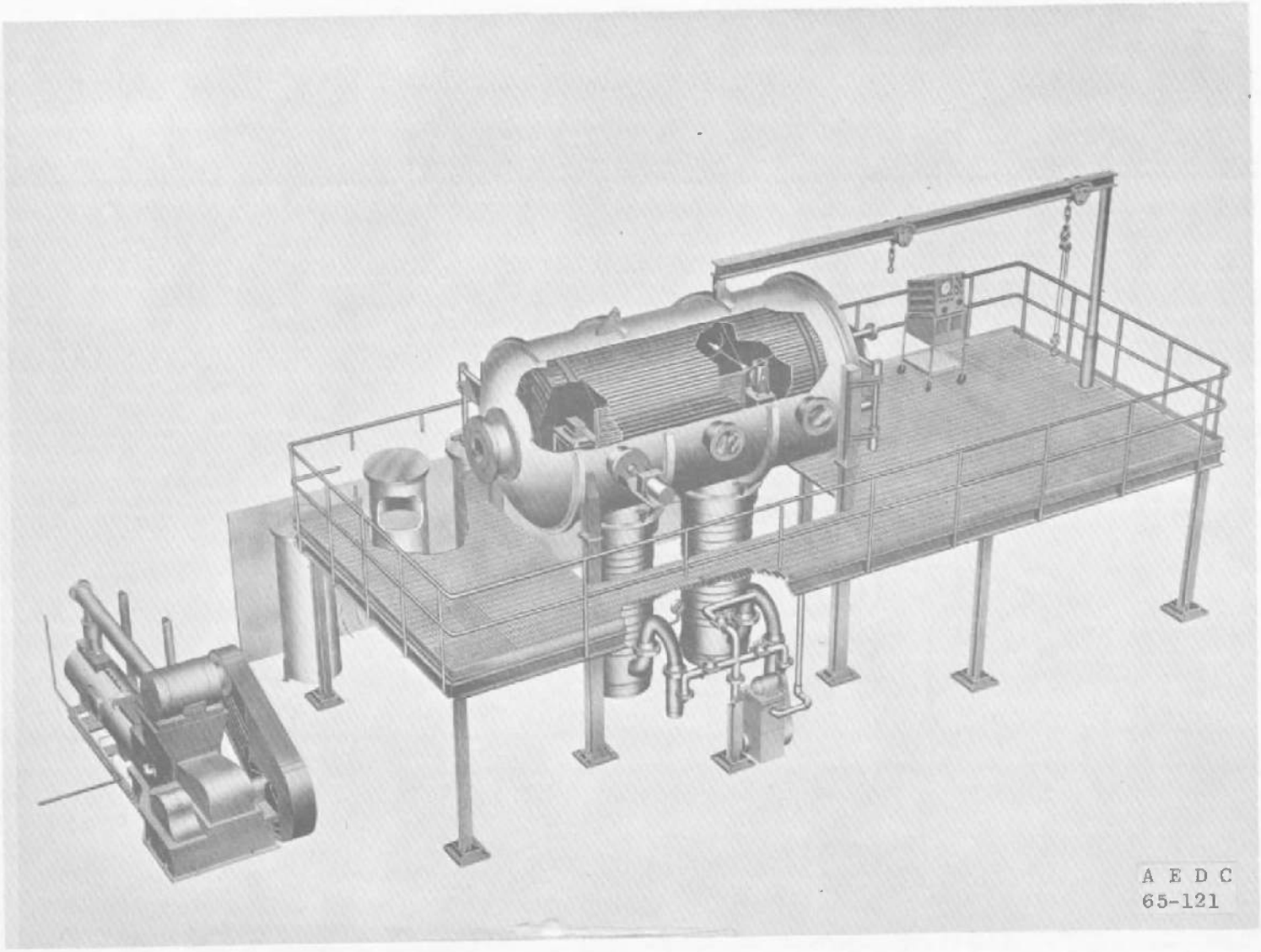

Fig. 1 ARC 7V Chamber

Fig. 2 Prototype and Model Test Bodies

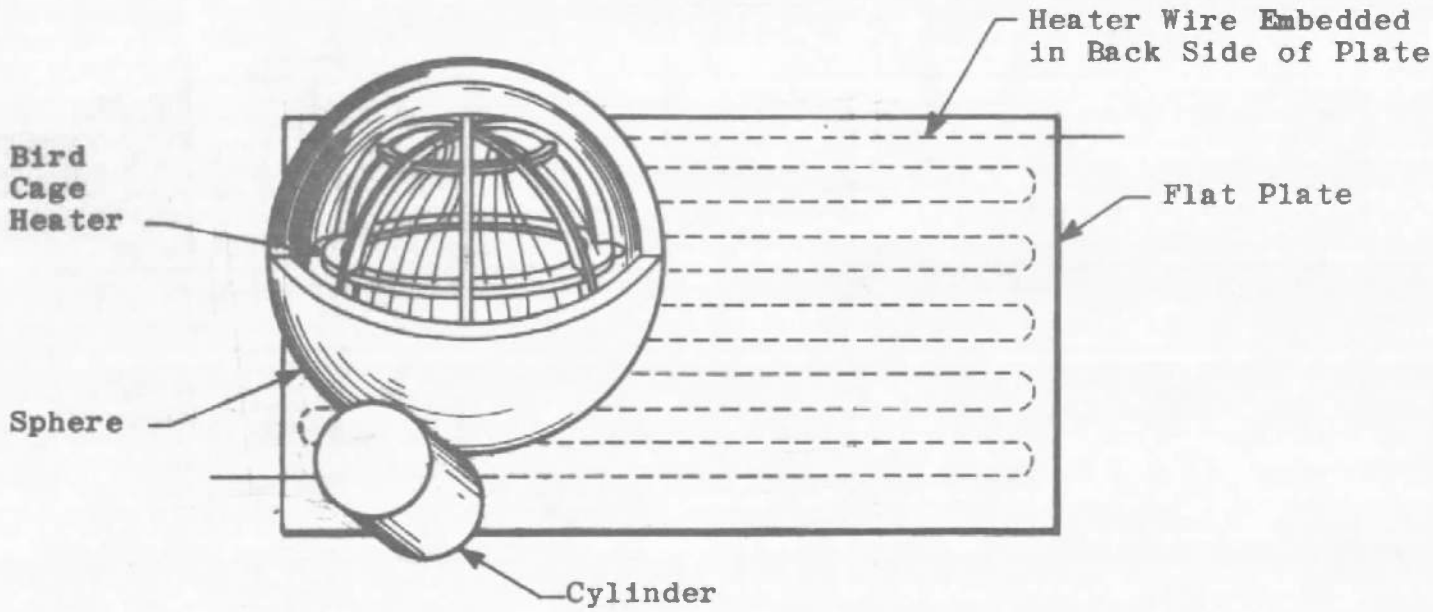

Fig. 3 Test Body Configuration

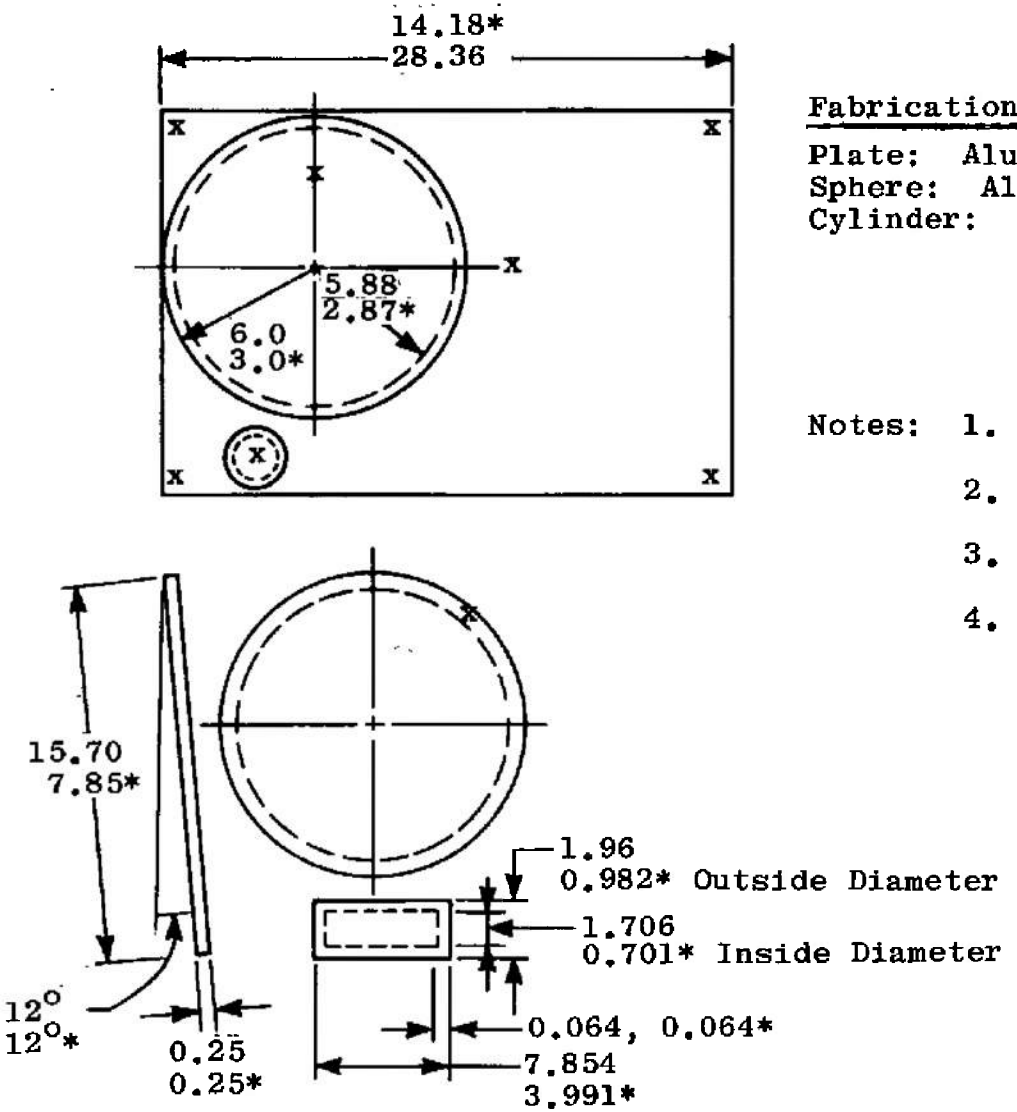

Fabrication Material

Plate: Aluminum (Internal Heat Generation)
Sphere: Aluminum (Internal Heat Generation)
Cylinder: Aluminum

Notes:
1. x = Location of Thermocouple Plotted on Data Graph
2. * = Scaled Model Dimensions, other Dimensions are Prototype
3. All radiating surfaces were coated with carbon black.
4. All Dimensions in Inches

Fig. 4 Test Body Specifications and Thermocouple Locations

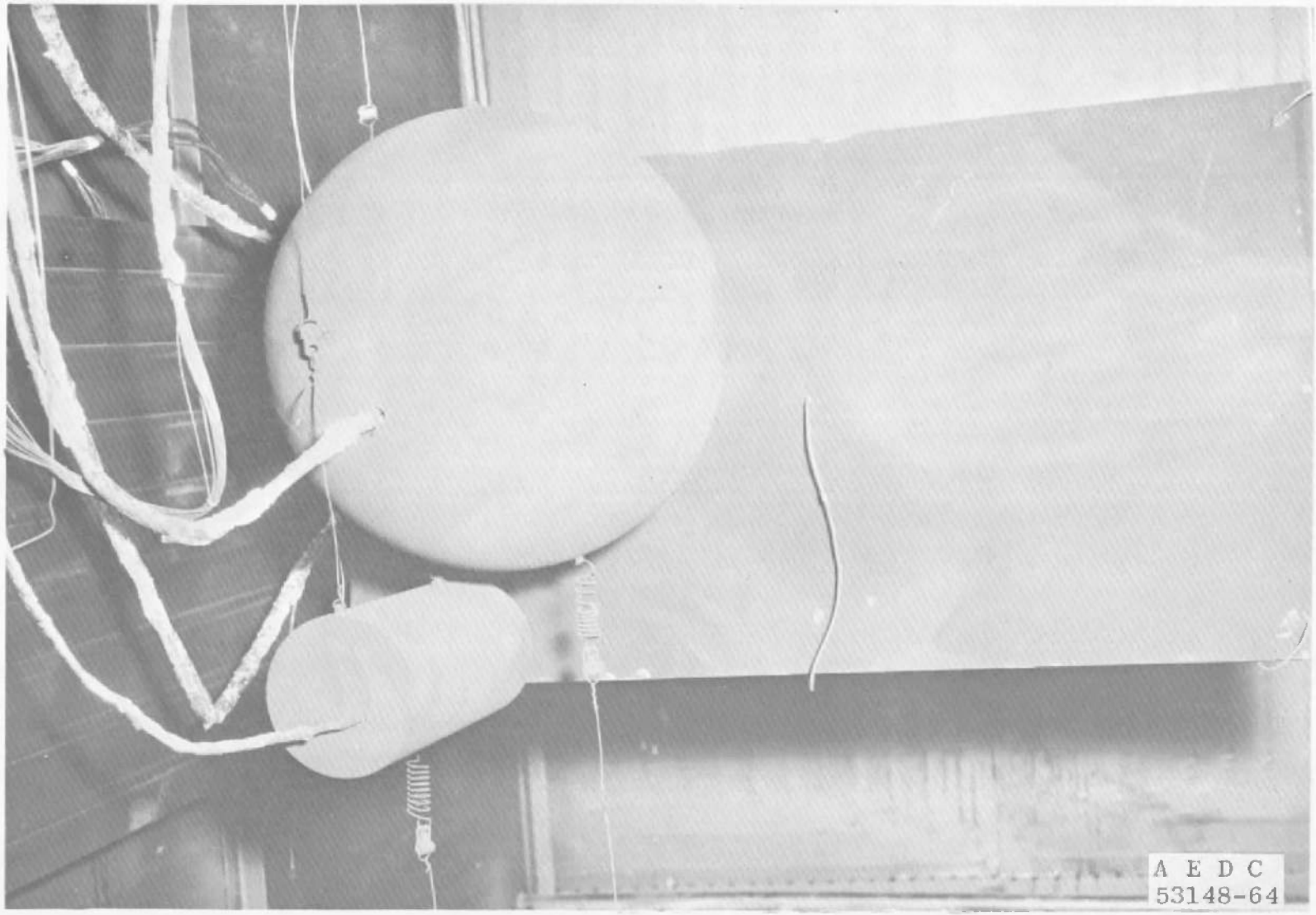

Fig. 5 Chamber Installotion of Prototype Bodies

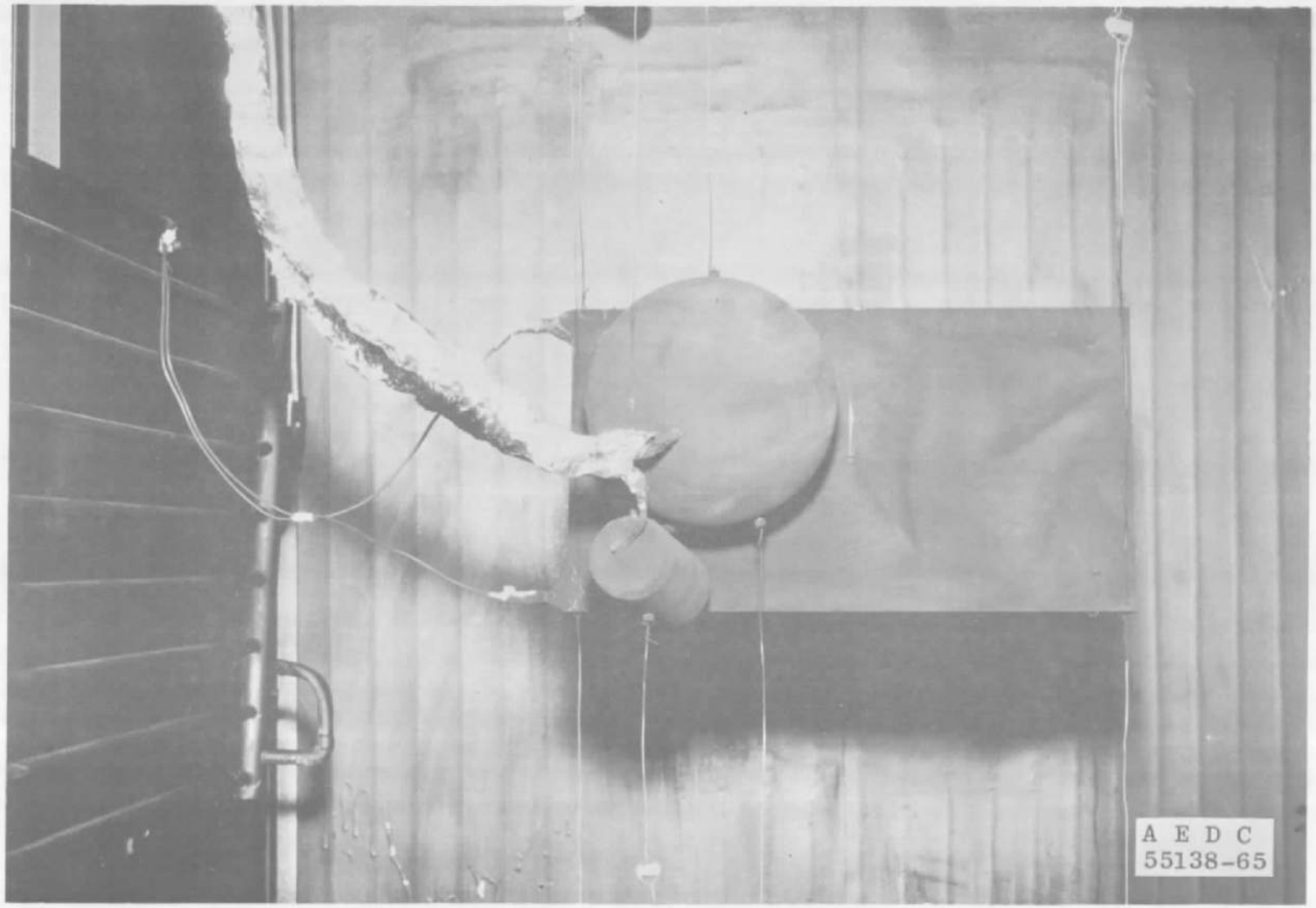

Fig. 6 Chamber Installation of Scaled Bodies

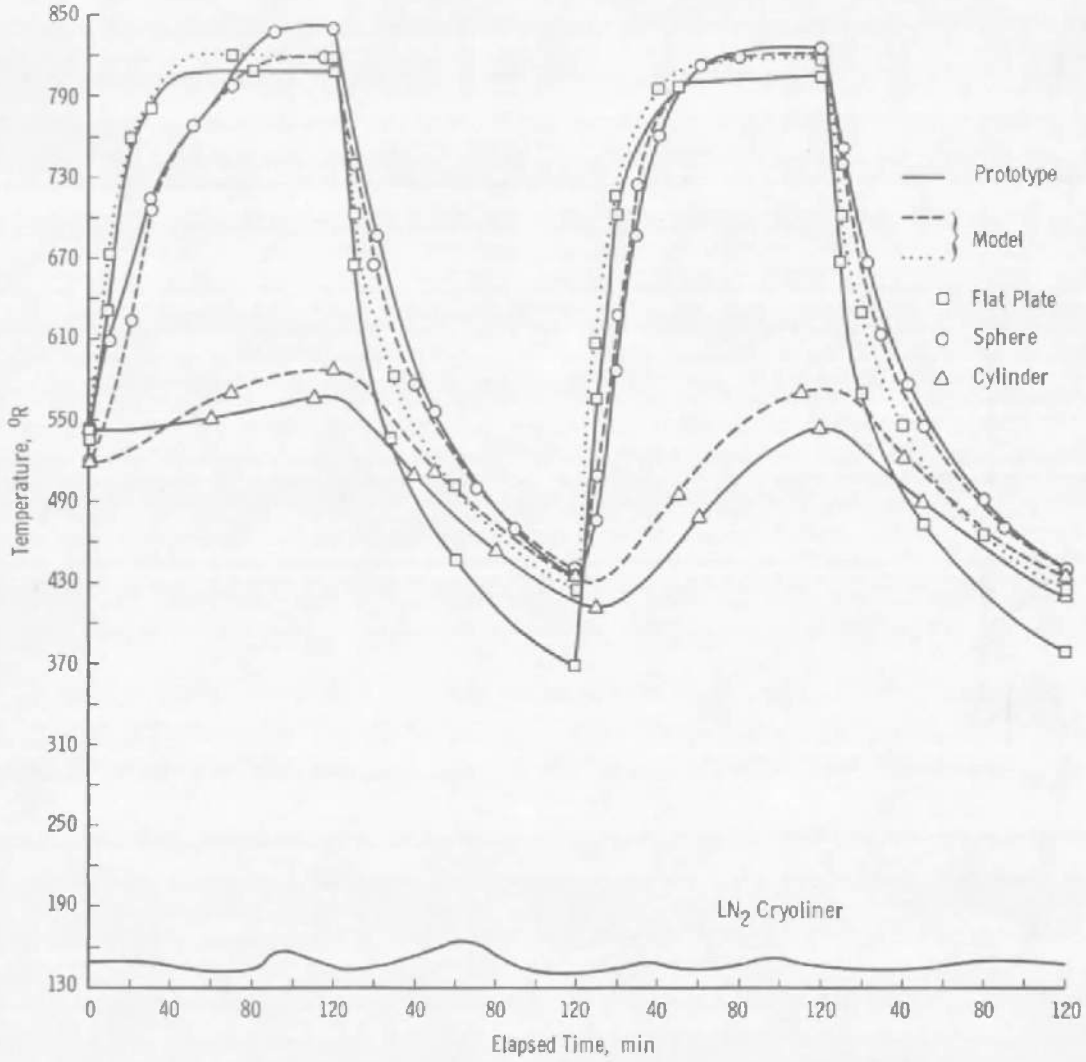

Fig. 7 Temperature-Time Characteristics of a Flat Plate, Sphere, and Cylinder

TABLE I
PARAMETER MODELING RELATIONS

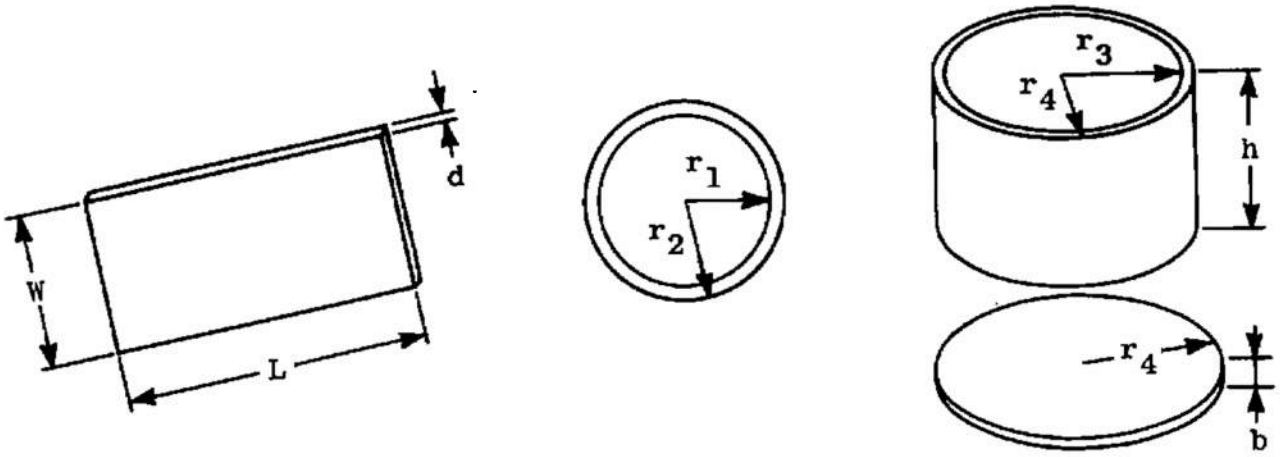

Test Body Dimension		Model/Prototype
Plate	L	1/2
	W	1/2
	d	1
Sphere		
	r_1	$1/2 \left[2 - \left(\frac{r_2}{r_1}\right)^3\right]^{1/3}$
	r_2	1/2
Cylinder		
	r_4	1/2
	r_3	$\frac{\sqrt{2}}{2} \left[1 - 1/2\left(\frac{r_4}{r_3}\right)^2\right]^{1/2}$
	h	1/2
	b	1
Variables and Parameters		
	T_j	1
	t	1
	F_{kj}	1
	$(\rho C_p)_j$	1
	q_j	1/4

UNCLASSIFIED

Security Classification

DOCUMENT CONTROL DATA - R&D

(Security classification of title, body of abstract and indexing annotation must be entered when the overall report is classified)

1 ORIGINATING ACTIVITY *(Corporate author)* Arnold Engineering Development Center ARO, Inc., Operating Contractor Arnold AF Station, Tennessee	2a REPORT SECURITY CLASSIFICATION UNCLASSIFIED 2b GROUP N/A

3 REPORT TITLE

SCALING OF ISOTHERMAL SIMPLE-SHAPED BODIES IN A TRANSIENT TEMPERATURE ENVIRONMENT

4 DESCRIPTIVE NOTES *(Type of report and inclusive dates)*

N/A

5 AUTHOR(S) *(Last name, first name, initial)*

Adkins, D. L., ARO, Inc.

6 REPORT DATE	7a TOTAL NO. OF PAGES	7b NO OF REFS
April 1966	22	1

8a CONTRACT OR GRANT NO. AF 40(600)-1200 b ~~XXXXXXXX~~ Program Element 65402234 c d	9a ORIGINATOR'S REPORT NUMBER(S) AEDC-TR-66-21 9b OTHER REPORT NO(S) *(Any other numbers that may be assigned this report)* N/A

10 AVAILABILITY/LIMITATION NOTICES

Qualified requesters may obtain copies of this report from DDC.

11 SUPPLEMENTARY NOTES N/A	12 SPONSORING MILITARY ACTIVITY National Aeronautics and Space Administration, Marshall Space Flight Center, Huntsville, Ala.

13 ABSTRACT Thermal modeling was performed with a flat plate, sphere, and cylinder. These aluminum bodies were located in a relatively close array. Electrical resistance heaters in the plate and sphere provided the external heat sources. The bodies were fabricated from aluminum. The temperature distributions on the body surfaces were small enough to permit an isothermal assumption. A theoretical design analysis of the system was conducted and is discussed. Chamber testing consisted of eight continuous hours of 2-hr intervals of heating and cooling cycles in a pressure range of 10^{-7} torr. (U)

DD FORM 1 JAN 64 1473

UNCLASSIFIED

Security Classification

14 KEY WORDS	LINK A ROLE	LINK A WT	LINK B ROLE	LINK B WT	LINK C ROLE	LINK C WT
1 thermal similarity 2 thermal scaling 3 thermal modeling ~~temperature distributions~~ 4. Scaling 1-2 5 Modeling 6. Similitude						

INSTRUCTIONS

1. ORIGINATING ACTIVITY: Enter the name and address of the contractor, subcontractor, grantee, Department of Defense activity or other organization *(corporate author)* issuing the report.

2a. REPORT SECURITY CLASSIFICATION: Enter the overall security classification of the report. Indicate whether "Restricted Data" is included. Marking is to be in accordance with appropriate security regulations.

2b. GROUP: Automatic downgrading is specified in DoD Directive 5200.10 and Armed Forces Industrial Manual. Enter the group number. Also, when applicable, show that optional markings have been used for Group 3 and Group 4 as authorized.

3. REPORT TITLE: Enter the complete report title in all capital letters. Titles in all cases should be unclassified. If a meaningful title cannot be selected without classification, show title classification in all capitals in parenthesis immediately following the title.

4. DESCRIPTIVE NOTES: If appropriate, enter the type of report, e.g., interim, progress, summary, annual, or final. Give the inclusive dates when a specific reporting period is covered.

5. AUTHOR(S): Enter the name(s) of author(s) as shown on or in the report. Enter last name, first name, middle initial. If military, show rank and branch of service. The name of the principal author is an absolute minimum requirement.

6. REPORT DATE: Enter the date of the report as day, month, year, or month, year. If more than one date appears on the report, use date of publication.

7a. TOTAL NUMBER OF PAGES: The total page count should follow normal pagination procedures, i.e., enter the number of pages containing information.

7b. NUMBER OF REFERENCES: Enter the total number of references cited in the report.

8a. CONTRACT OR GRANT NUMBER: If appropriate, enter the applicable number of the contract or grant under which the report was written.

8b, 8c, & 8d. PROJECT NUMBER: Enter the appropriate military department identification, such as project number, subproject number, system numbers, task number, etc.

9a. ORIGINATOR'S REPORT NUMBER(S): Enter the official report number by which the document will be identified and controlled by the originating activity. This number must be unique to this report.

9b. OTHER REPORT NUMBER(S): If the report has been assigned any other report numbers *(either by the originator or by the sponsor)*, also enter this number(s).

10. AVAILABILITY/LIMITATION NOTICES: Enter any limitations on further dissemination of the report, other than those imposed by security classification, using standard statements such as:

(1) "Qualified requesters may obtain copies of this report from DDC."

(2) "Foreign announcement and dissemination of this report by DDC is not authorized."

(3) "U. S. Government agencies may obtain copies of this report directly from DDC. Other qualified DDC users shall request through _____."

(4) "U. S. military agencies may obtain copies of this report directly from DDC. Other qualified users shall request through _____."

(5) "All distribution of this report is controlled. Qualified DDC users shall request through _____."

If the report has been furnished to the Office of Technical Services, Department of Commerce, for sale to the public, indicate this fact and enter the price, if known.

11. SUPPLEMENTARY NOTES: Use for additional explanatory notes.

12. SPONSORING MILITARY ACTIVITY: Enter the name of the departmental project office or laboratory sponsoring *(paying for)* the research and development. Include address.

13. ABSTRACT: Enter an abstract giving a brief and factual summary of the document indicative of the report, even though it may also appear elsewhere in the body of the technical report. If additional space is required, a continuation sheet shall be attached.

It is highly desirable that the abstract of classified reports be unclassified. Each paragraph of the abstract shall end with an indication of the military security classification of the information in the paragraph, represented as *(TS), (S), (C), or (U)*.

There is no limitation on the length of the abstract. However, the suggested length is from 150 to 225 words.

14. KEY WORDS: Key words are technically meaningful terms or short phrases that characterize a report and may be used as index entries for cataloging the report. Key words must be selected so that no security classification is required. Identifiers, such as equipment model designation, trade name, military project code name, geographic location, may be used as key words but will be followed by an indication of technical context. The assignment of links, rules, and weights is optional.