# U. S. ARMY
# TRANSPORTATION RESEARCH COMMAND
# FORT EUSTIS, VIRGINIA

SUPPLEMENT
to
TRECOM TECHNICAL REPORT 64-4

AD-607659

## CRASH INJURY EVALUATION

## PERSONNEL RESTRAINT SYSTEMS STUDY
## CH-47 VERTOL CHINOOK

Contract DA 44-177-AMC-888(T)

April 1964

PROPERTY OF U. S. ARMY
TECHNICAL LIBRARY

**prepared by:**

AVIATION SAFETY ENGINEERING AND RESEARCH
Phoenix, Arizona

A Division Of
Flight Safety Foundation, Inc.
New York, New York

NOV 16 1964

4050-64

## DISCLAIMER NOTICE

When Government drawings, specifications, or other data are used for any purpose other than in connection with a definitely related Government procurement operation, the United States Government thereby incurs no responsibility nor any obligation whatsoever; and the fact that the Government may have formulated, furnished, or in any way supplied the said drawings, specifications, or other data is not to be regarded by implication or otherwise as in any manner licensing the holder or any other person or corporation, or conveying any rights or permission, to manufacture, use, or sell any patented invention that may in any way be related thereto.

* * *

## DDC AVAILABILITY NOTICE

Qualified requesters may obtain copies of this report from

Defense Documentation Center
Cameron Station
Alexandria, Virginia 22314

* * *

This report has been released to the Office of Technical Services, U. S. Department of Commerce, Washington 25, D. C., for sale to the general public.

* * *

The findings and recommendations contained in this report are those of the contractor and do not necessarily reflect the views of the U. S. Army Mobility Command, the U. S. Army Materiel Command, or the Department of the Army.

Task 1A024701A12101
Contract DA 44-177-AMC-888(T)
TRECOM Technical Report 64-4

April 1964

# SUPPLEMENT
to
# PERSONNEL RESTRAINT SYSTEMS STUDY, CH-47 VERTOL CHINOOK

Crash Injury Evaluation
AvCIR 62-26

Prepared by
Aviation Safety Engineering and Research
2871 Sky Harbor Blvd.
Phoenix, Arizona
A Division of
Flight Safety Foundation, Inc.

for
U. S. ARMY TRANSPORTATION RESEARCH COMMAND
FORT EUSTIS, VIRGINIA

## CONTENTS


| | | Page |
|---|---|---|
| HC-1-10 | Installation of Personnel Restraint System | 1-3 |
| HC-1-11 | Inertia Reel Installation (Pilot's and Copilot's Seat) | 4-6 |
| HC-1-12 | Reinforcement of Lap Belt Attachment | 7 |
| HC-1-13 | Reinforcement of Cockpit Floor and Track Modification | 8, 9 |
| HC-1-14 | Installation of Tie-Down Strap (Alternate 1) | 10 |
| HC-1-19 | Installation of Control Cable and Shoulder Harness | 11-13 |
| HC-1-20 | Reinforcement of Vertical Track, Seat Bucket (Crew Seat) | 14 |
| HC-1-21 | Modification of Carriage Assembly (Crew Seat) | 15-19 |
| HC-1-25 | Reinforcement of Lock-Pin Assembly (Seat Base) | 20 |
| HC-1-15 | Shoulder Harness (Troop Commander) | 21 |
| HC-1-16 | Installation of Attachment Fitting for Shoulder Harness | 22 |
| HC-1-17 | Fitting for Shoulder Harness Attachment (Left-Hand Side) | 23 |
| HC-1-18 | Fitting for Shoulder Harness Attachment (Right-Hand Side) | 24 |
| HC-1-22 | End Fitting for Lap Belt | 25 |

| | | Page |
|---|---|---|
| HC-1-23 | Lap Belt . . . . . | 26 |
| HC-1-24 | Installation of Restraint System . . . . . | 27 |
| HC-1-30 | Lap Belt Attachments . . . . . | 28-30 |
| AvCIR-10 | Lap Belt Tie-Down Strap . . . . . | 31 |
| AvCIR-15 | Pilot's Tie-Down Strap . . . . . | 32 |

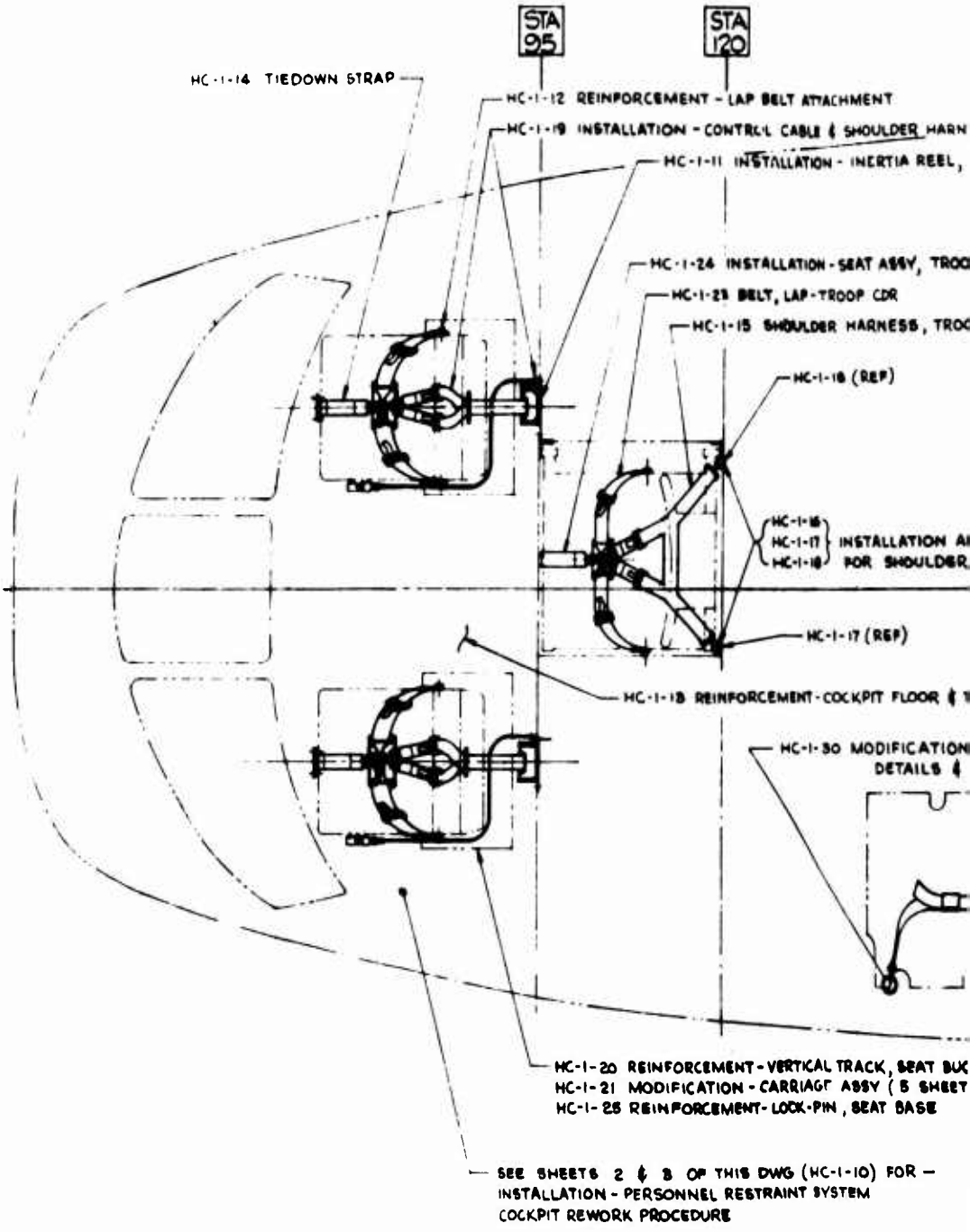
STA 95
STA 120
HC-1-14 TIEDOWN STRAP
HC-1-12 REINFORCEMENT - LAP BELT ATTACHMENT
HC-1-19 INSTALLATION - CONTROL CABLE & SHOULDER HARN
HC-1-11 INSTALLATION - INERTIA REEL,
HC-1-24 INSTALLATION - SEAT ASSY, TROO
HC-1-23 BELT, LAP - TROOP CDR
HC-1-15 SHOULDER HARNESS, TROO
HC-1-16 (REF)
HC-1-16
HC-1-17
HC-1-18
INSTALLATION A
FOR SHOULDER
HC-1-17 (REF)
HC-1-13 REINFORCEMENT - COCKPIT FLOOR &
HC-1-30 MODIFICATION
DETAILS &
HC-1-20 REINFORCEMENT - VERTICAL TRACK, SEAT BUC
HC-1-21 MODIFICATION - CARRIAGE ASSY ( 5 SHEET
HC-1-25 REINFORCEMENT - LOCK-PIN, SEAT BASE
SEE SHEETS 2 & 3 OF THIS DWG (HC-1-10) FOR -
INSTALLATION - PERSONNEL RESTRAINT SYSTEM
COCKPIT REWORK PROCEDURE

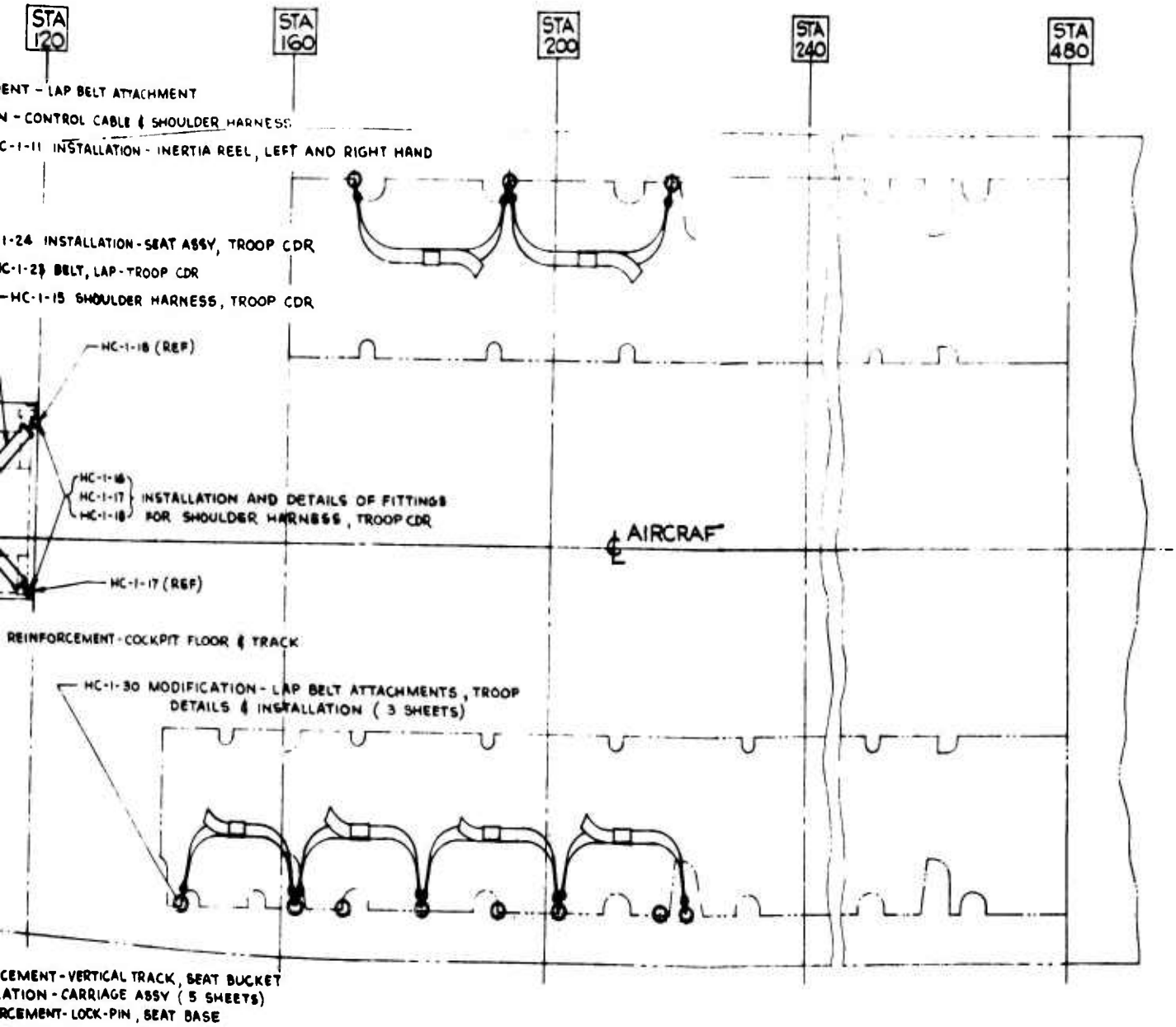
STA 120
STA 160
STA 200
STA 240
STA 480
ENT - LAP BELT ATTACHMENT
N - CONTROL CABLE & SHOULDER HARNESS
C-1-11 INSTALLATION - INERTIA REEL, LEFT AND RIGHT HAND
1-24 INSTALLATION - SEAT ASSY, TROOP CDR
C-1-23 BELT, LAP - TROOP CDR
-HC-1-15 SHOULDER HARNESS, TROOP CDR
HC-1-18 (REF)
HC-1-16
HC-1-17
HC-1-18
INSTALLATION AND DETAILS OF FITTINGS FOR SHOULDER HARNESS, TROOP CDR
℄ AIRCRAF
HC-1-17 (REF)
REINFORCEMENT - COCKPIT FLOOR & TRACK
HC-1-30 MODIFICATION - LAP BELT ATTACHMENTS, TROOP DETAILS & INSTALLATION (3 SHEETS)
CEMENT - VERTICAL TRACK, SEAT BUCKET
ATION - CARRIAGE ASSY (5 SHEETS)
RCEMENT - LOCK-PIN, SEAT BASE
F THIS DWG (HC-1-10) FOR -
IEL RESTRAINT SYSTEM
DURE

## REWORK PROCEDURE FOR COCKPIT OF HC-1

1. Remove entire seat assembly from aircraft by removing the counter-balance assemblies from back of the bucket and the pins from floor tracks.
2. Remove following items from seat bucket:
   a. Inertia reel and shoulder straps
   b. Seat belt and belt attachment
3. Remove shrouds and four rollers (C115-5-3) at forward edge of seat base from the carriage assembly (C-115-5) and lift the bucket from the seat base. The distance (e) between the edge of the annular groove in the roller and the Carriage Plate should be recorded for all eight roller positions as shown in the sketch below:

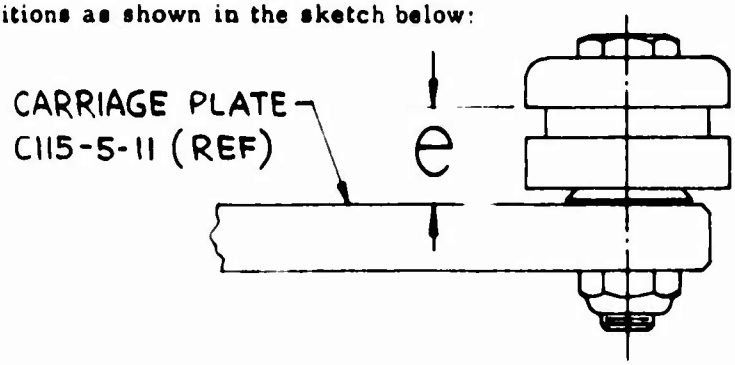


   Remove all rollers from Carriage Plate and accomplish rework of plate per HC-1-21.
4. Rework the seat as follows:
   a. Modify Carriage Assembly (C-115-5) per drawing HC-1-21.
   b. Add fasteners to the C-115-3-71 Vert. Track on Seat Bucket per HC-1-20.
   ~~c. Rework seat base diagonal braces per HC-1~~
   d. Install heat treated seat belt brackets with high-strength bolts per HC-1-12.
   e. Install seat belt tiedown strap on bucket per HC-1-14.
   f. Rework floor tracks and beams per HC-1-13.
   g. Install Reel Control Cable Clamps per HC-1-19.
   h. Install Inertia Reel on F.S. 95 Bulkhead per HC-1-11.
5. Reassemble Carriage Assembly per HC-1-21 and use necessary laminated shim stock to make distance from groove to plate equal to the distance before disassembly as noted in Step 3. Install carriage assembly on Vert. Track of Seat Bucket and adjust eccentric cams so that no more than .020 inch clearance exists between roller and track at any position on the Track. Tighten the four bolts snugly.

6. Install the Seat Bucket and Carriage Plate (with the four rollers and slides in the forward positions deleted) until the seat bucket and carriage plate are positioned on the seat base.
7. Adjust eccentric cams on outboard side of Carriage Plates so that no more than .020 inch clearance exists between roller and curved track at any position along the track.
8. Check operation of seat bucket on the curved track and the vertical track. It should be noted that the uppermost hole in the Carriage Plate will be blocked off in the rework which will cause the seat bucket to be located 0.5 inches below the existing position. The seat bucket should move freely up and down both tracks. After final adjustments are made, tighten the .31 dia. bolts (in the carriage plate) to 80-100 inch lb. and all larger bolts to 150-200 inch lb. torque.
9. Make functional check to insure that seat positively locks in all five positions on curved track and in all 10 positions on vertical track.
10. Install seat in cockpit, and place the AN392-43 stop pin into the new hole on the floor track as noted in HC-1-13. The horizontal seat movement should now be restricted to four positions rather than the existing five positions. Check seat for free horizontal movement on floor tracks and recheck for free vert. movement on the curved track and straight track.
11. Install the counterbalance rods to back of seat bucket and thread the shoulder straps through the seat back guide.
12. Make functional check of restraint harness as follows:
    a. Check length of center tiedown strap (HC-1-14) to insure that it can be attached to the lap belt without difficulty and also that it is not too long. The tiedown strap should definitely prevent the belt from moving high enough to pull over the hip bones and into the soft stomach tissue.
    b. Check freedom of movement with inertia reel control handle in automatic-lock position. With seat located in the extreme up and aft position, the pilot should have sufficient shoulder strap travel to allow him to reach all necessary controls.

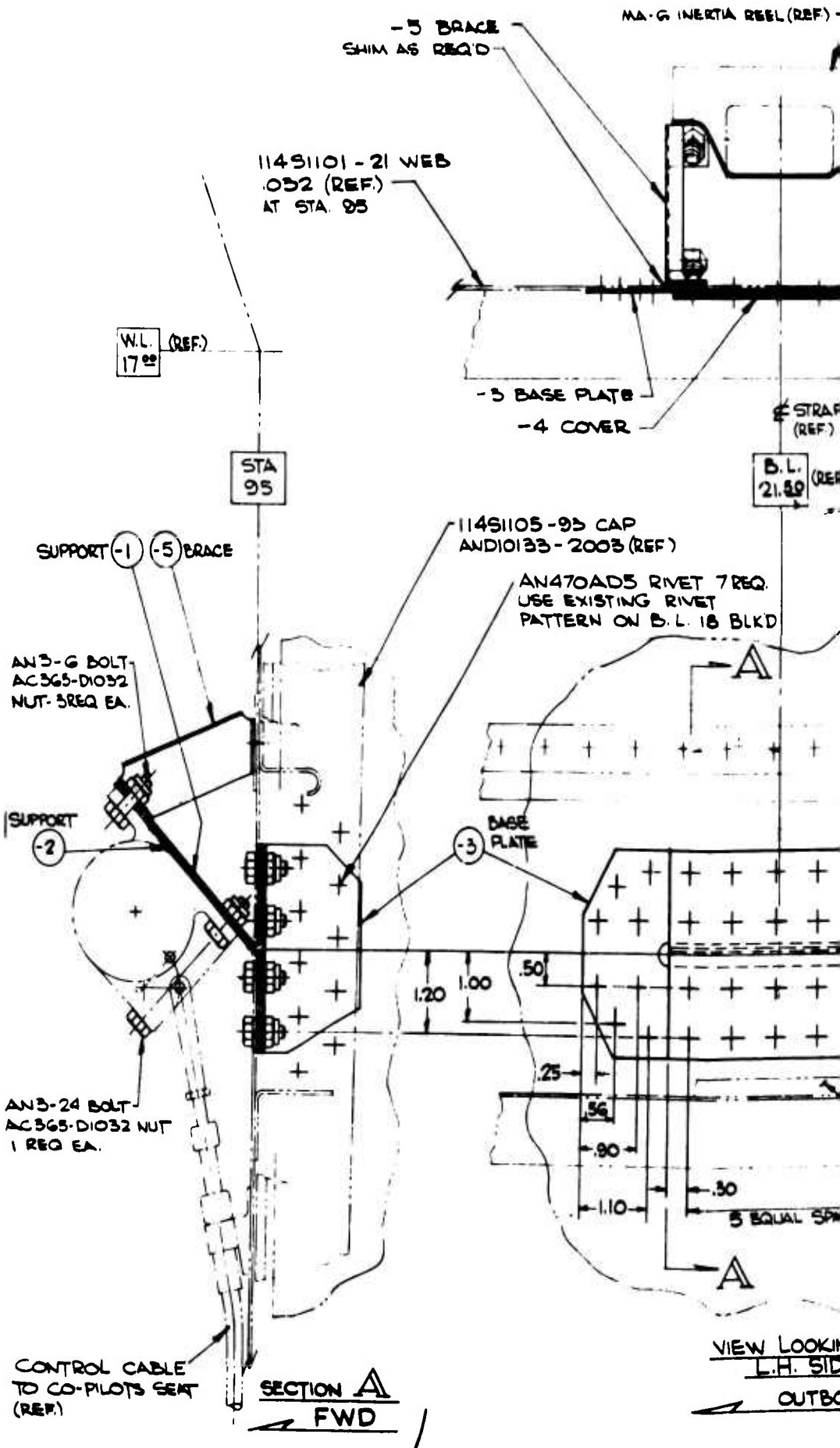
-5 BRACE
SHIM AS REQ'D
MA-G INERTIA REEL (REF)
1149101-21 WEB
.032 (REF.)
AT STA. 95
W.L. 17.00 (REF.)
-3 BASE PLATE
-4 COVER
℄ STRAP (REF.)
STA 95
B.L. 21.50 (REF)
1149105-95 CAP
AND10133-2003 (REF)
SUPPORT -1
-5 BRACE
AN470AD5 RIVET 7 REQ.
USE EXISTING RIVET
PATTERN ON B.L. 18 BLKD
AN3-6 BOLT
AC365-D1032
NUT-3 REQ EA.
SUPPORT -2
-3 BASE PLATE
1.20
1.00
.50
.25
.56
.90
1.10
.30
5 EQUAL SP
AN3-24 BOLT
AC365-D1032 NUT
1 REQ EA.
CONTROL CABLE
TO CO-PILOTS SEAT
(REF.)
SECTION A
FWD
VIEW LOOKIN
L.H. SID
OUTBO

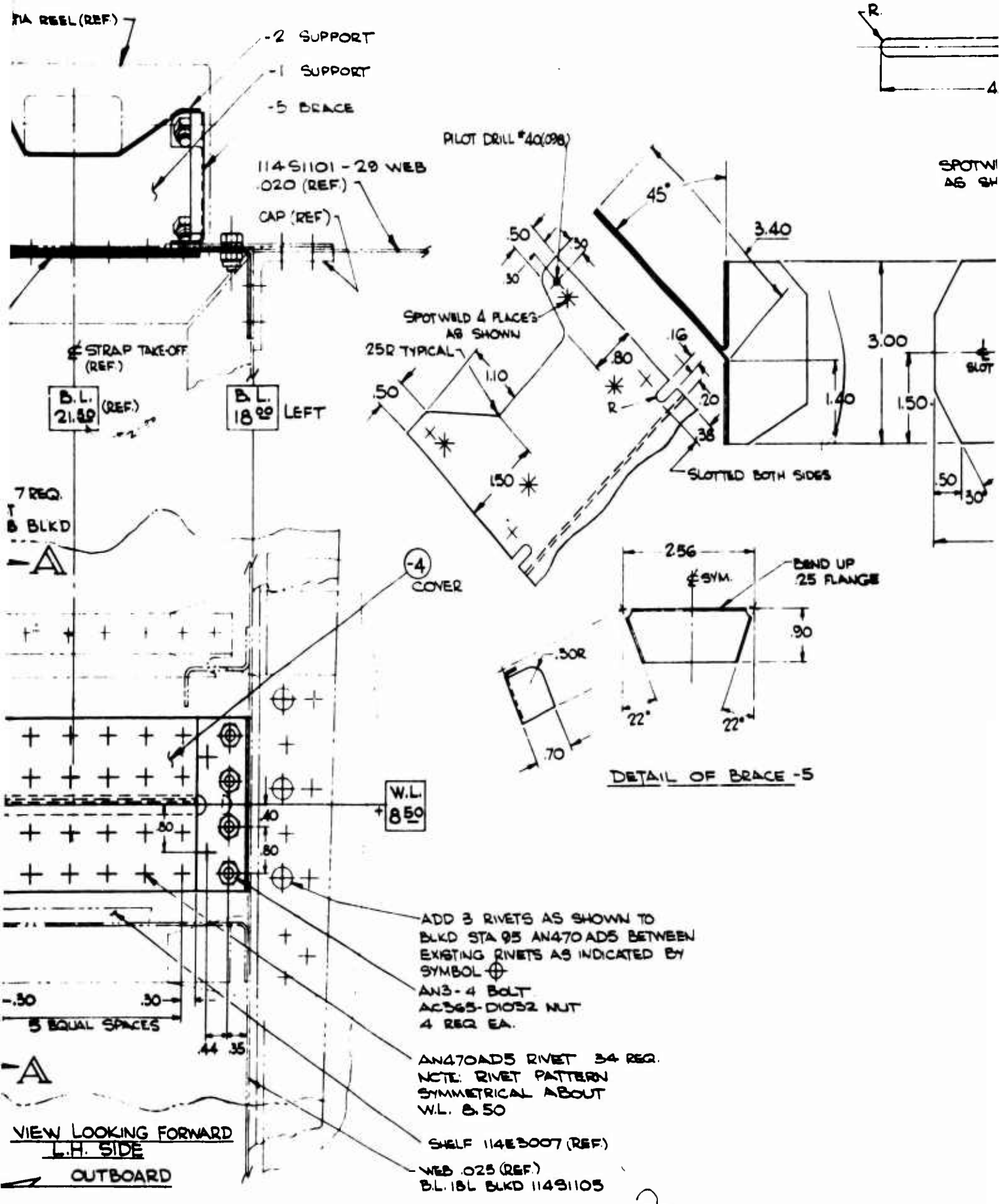

TIA REEL (REF.)
-2 SUPPORT
-1 SUPPORT
-5 BRACE
114S1101 - 29 WEB
.020 (REF.)
CAP (REF.)
℄ STRAP TAKE-OFF
(REF.)
B.L. 21.50 (REF.)
B.L. 18.00 LEFT
7 REQ.
B BLKD
A
-4
COVER
W.L. 8.50
.80
.40
.80
-.30
.30
5 EQUAL SPACES
.44
.35
A
VIEW LOOKING FORWARD
L.H. SIDE
OUTBOARD
ADD 3 RIVETS AS SHOWN TO
BLKD STA 95 AN470AD5 BETWEEN
EXISTING RIVETS AS INDICATED BY
SYMBOL
AN3-4 BOLT
AC365-D1032 NUT
4 REQ EA.
AN470AD5 RIVET 34 REQ.
NOTE: RIVET PATTERN
SYMMETRICAL ABOUT
W.L. 8.50
SHELF 114E3007 (REF.)
WEB .025 (REF.)
B.L. 18L BLKD 114S1105
PILOT DRILL #40(.098)
45°
3.40
.50
.30
.30
SPOTWELD 4 PLACES
AS SHOWN
.25R TYPICAL
1.10
.50
.80
.16
.20
R
.38
1.50
SLOTTED BOTH SIDES
3.00
1.40
1.50
SLOT
.50
.30
R.
4
SPOTW
AS SH
2.56
℄ SYM.
BEND UP
.25 FLANGE
.90
.30R
.70
22°
22°
DETAIL OF BRACE -5


1

2

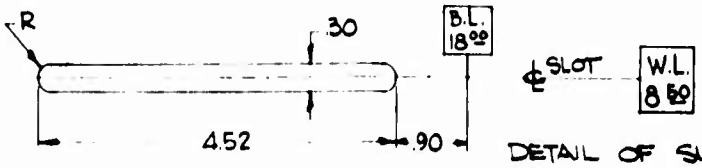


DETAIL OF SLOT CUT IN -3 BASE PLATE. DIMENSION ALSO APPLY TO SLOT CUT IN STA. 95 BULKHEAD

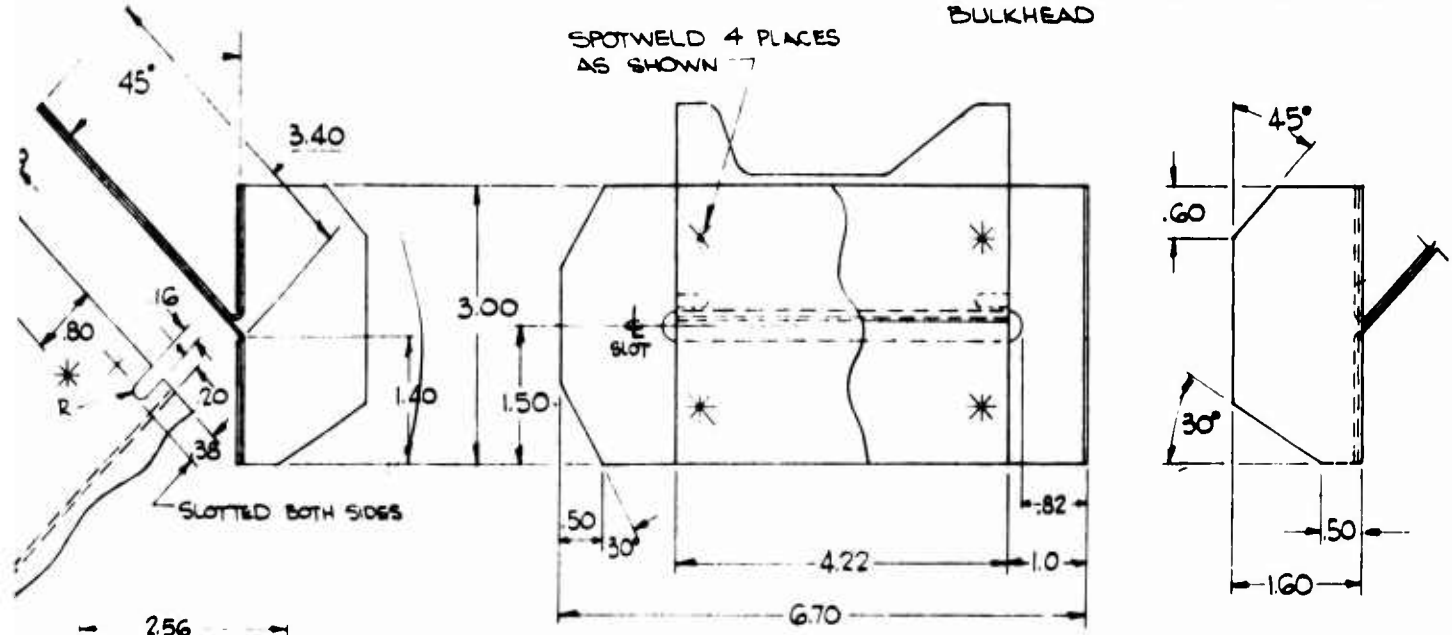


DETAIL OF SUPPORT -1-2

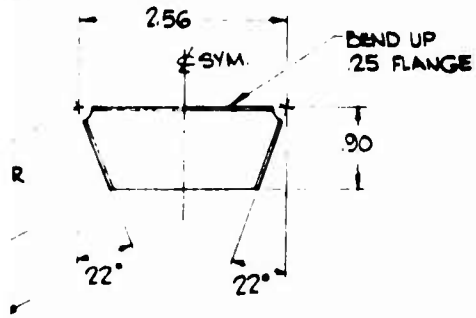


DETAIL OF BRACE -5

SHOWN TO
DADS BETWEEN
INDICATED BY

34 REQ.
BRN
OUT

REF)

105

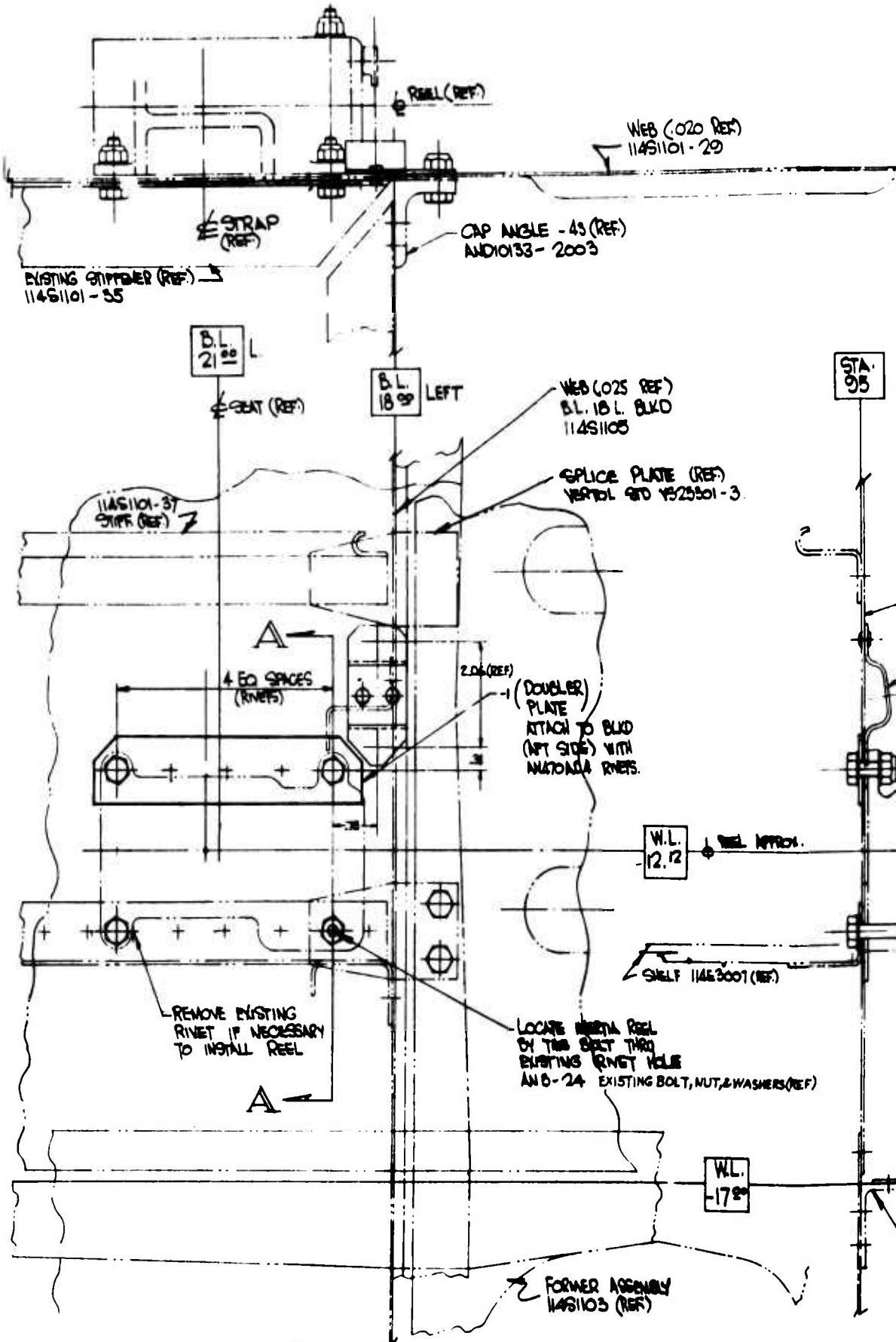


VIEW LOOKING FORWARD
LEFT HAND SIDE
AT STATION 95 BULKHEAD

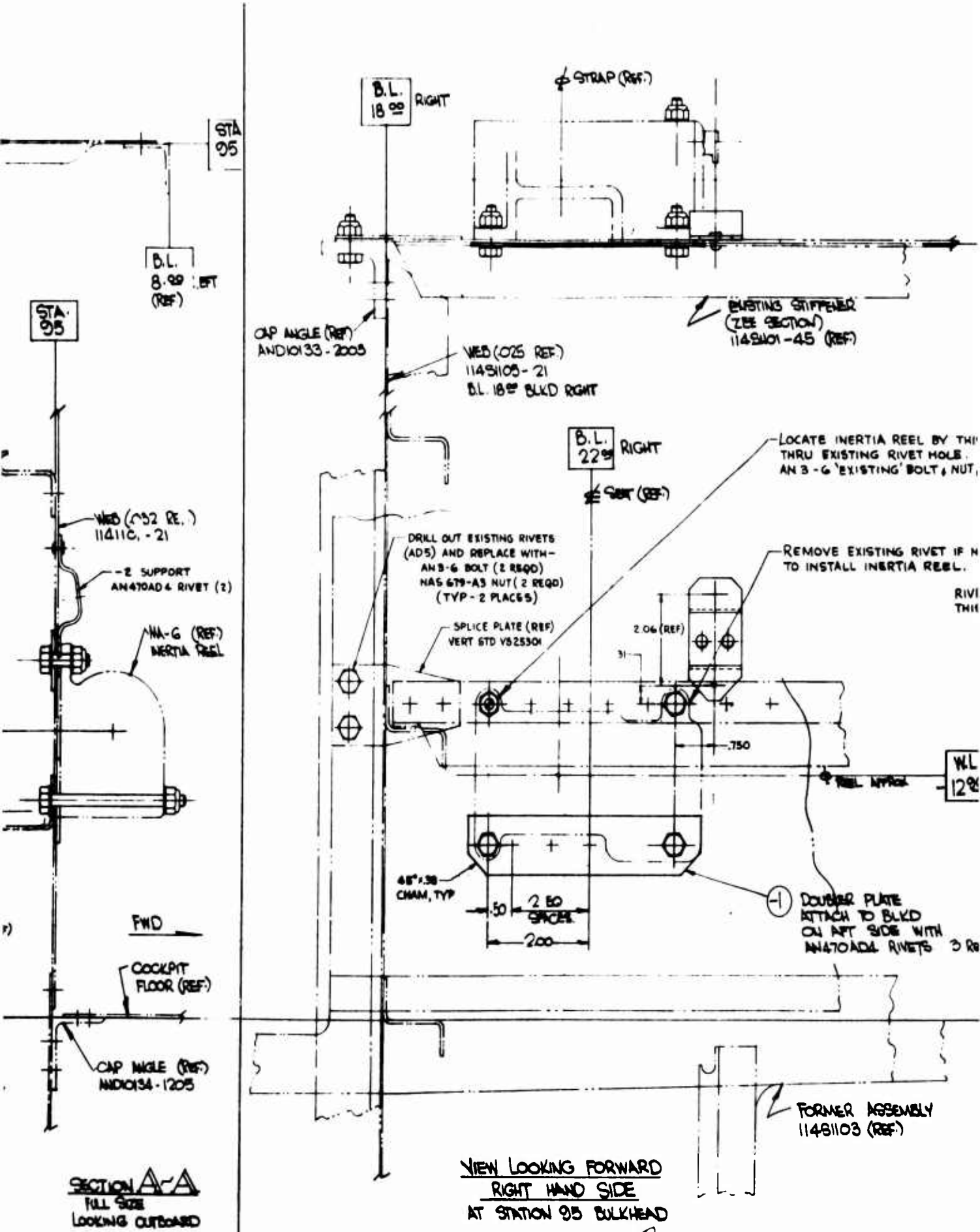
STA 95
B.L. 8.99 LEFT (REF)
STA 95
WEB (.032 REF.) 11411C, -21
-2 SUPPORT AN470AD4 RIVET (2)
NA-6 (REF) INERTIA REEL
FWD
COCKPIT FLOOR (REF)
CAP ANGLE (REF) AND10134-1205
SECTION A-A
FULL SIZE
LOOKING OUTBOARD
B.L. 18.00 RIGHT
STRAP (REF)
EXISTING STIFFENER (ZEE SECTION) 11491101-45 (REF)
CAP ANGLE (REF) AND10133-2005
WEB (.025 REF) 11491105-21 B.L. 18.00 BLKD RIGHT
B.L. 22.99 RIGHT
SEAT (REF)
LOCATE INERTIA REEL BY THR THRU EXISTING RIVET HOLE. AN 3-6 'EXISTING' BOLT & NUT,
DRILL OUT EXISTING RIVETS (AD5) AND REPLACE WITH- AN3-6 BOLT (2 REQD) NAS 679-A3 NUT (2 REQD) (TYP - 2 PLACES)
REMOVE EXISTING RIVET IF N TO INSTALL INERTIA REEL.
SPLICE PLATE (REF) VERT STD V32530I
2.06 (REF)
.31
.750
REEL APPROX
W.L 12.9
.48"x.38 CHAM, TYP
.50
2.50 SPACES
2.00
-1 DOUBLER PLATE ATTACH TO BLKD ON AFT SIDE WITH AN470AD4 RIVETS 3 RE
FORMER ASSEMBLY 11481103 (REF)
VIEW LOOKING FORWARD
RIGHT HAND SIDE
AT STATION 95 BULKHEAD

1

2

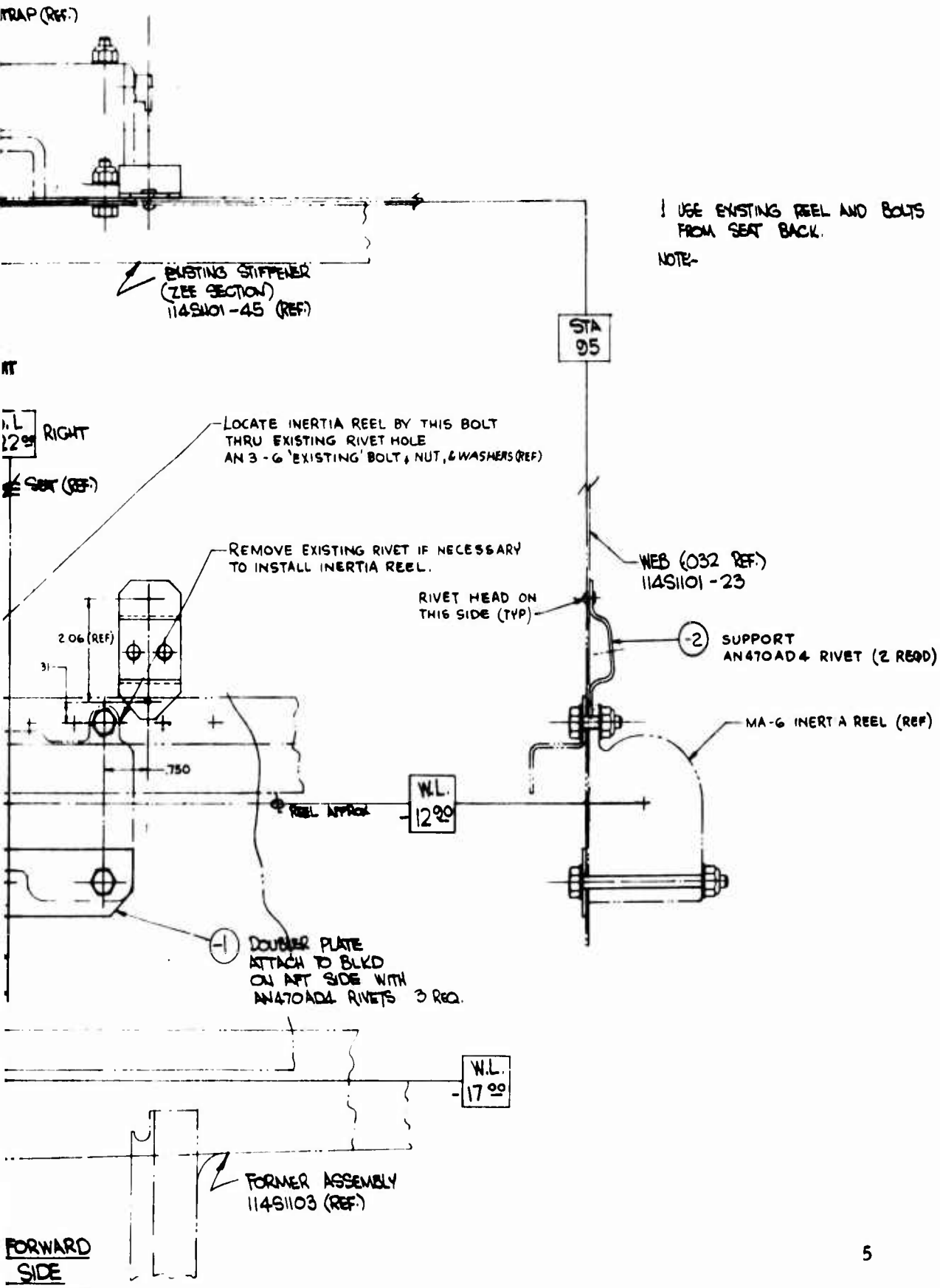
TRAP (REF.)
EXISTING STIFFENER (ZEE SECTION) 114S1101-45 (REF.)
NOTE- USE EXISTING REEL AND BOLTS FROM SEAT BACK.
STA 95
W.L. 12.00 RIGHT
SEAT (REF.)
LOCATE INERTIA REEL BY THIS BOLT THRU EXISTING RIVET HOLE AN 3-6 'EXISTING' BOLT, NUT, & WASHERS (REF)
REMOVE EXISTING RIVET IF NECESSARY TO INSTALL INERTIA REEL.
WEB (.032 REF.) 114S1101-23
RIVET HEAD ON THIS SIDE (TYP)
-2 SUPPORT AN470AD4 RIVET (2 REQD)
2.06 (REF)
.31
.750
MA-6 INERTIA REEL (REF)
REEL APPROX
W.L. 12.00
-1 DOUBLER PLATE ATTACH TO BLKD ON AFT SIDE WITH AN470AD4 RIVETS 3 REQ.
W.L. 17.00
FORMER ASSEMBLY 114S1103 (REF.)
FORWARD SIDE BULKHEAD

5

2

3

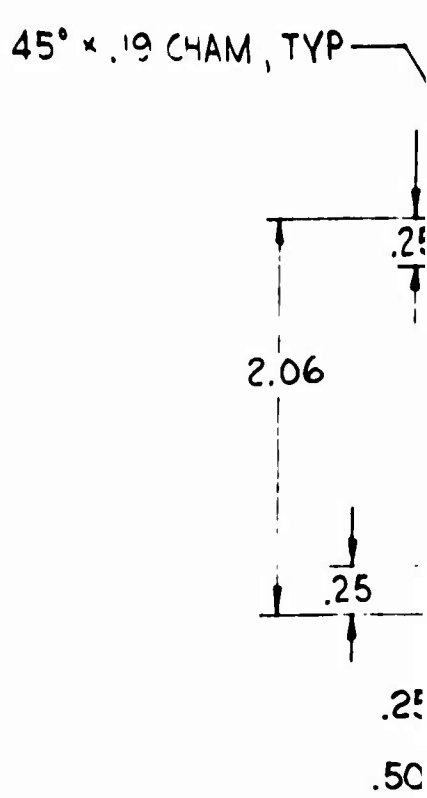


2 ZINC CHROMATE ALL OVER

1. REMOVE ALL BURRS

NOTE

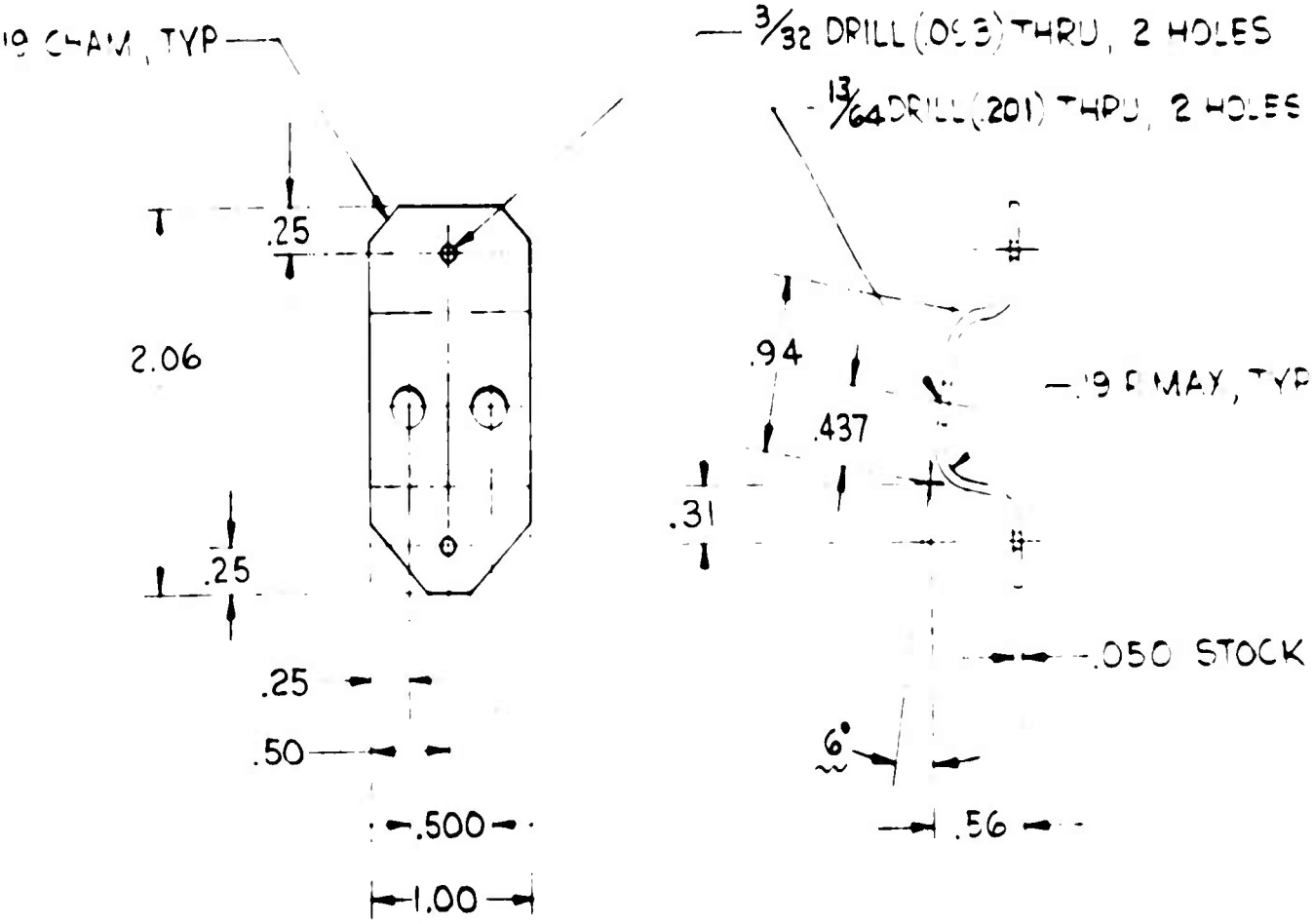
19 CHAM, TYP
3/32 DRILL (.093) THRU, 2 HOLES
13/64 DRILL (.201) THRU, 2 HOLES
.25
2.06
.25
.25
.50
.500
1.00
.94
.437
.31
.19 R MAX, TYP
.050 STOCK
6°
.56

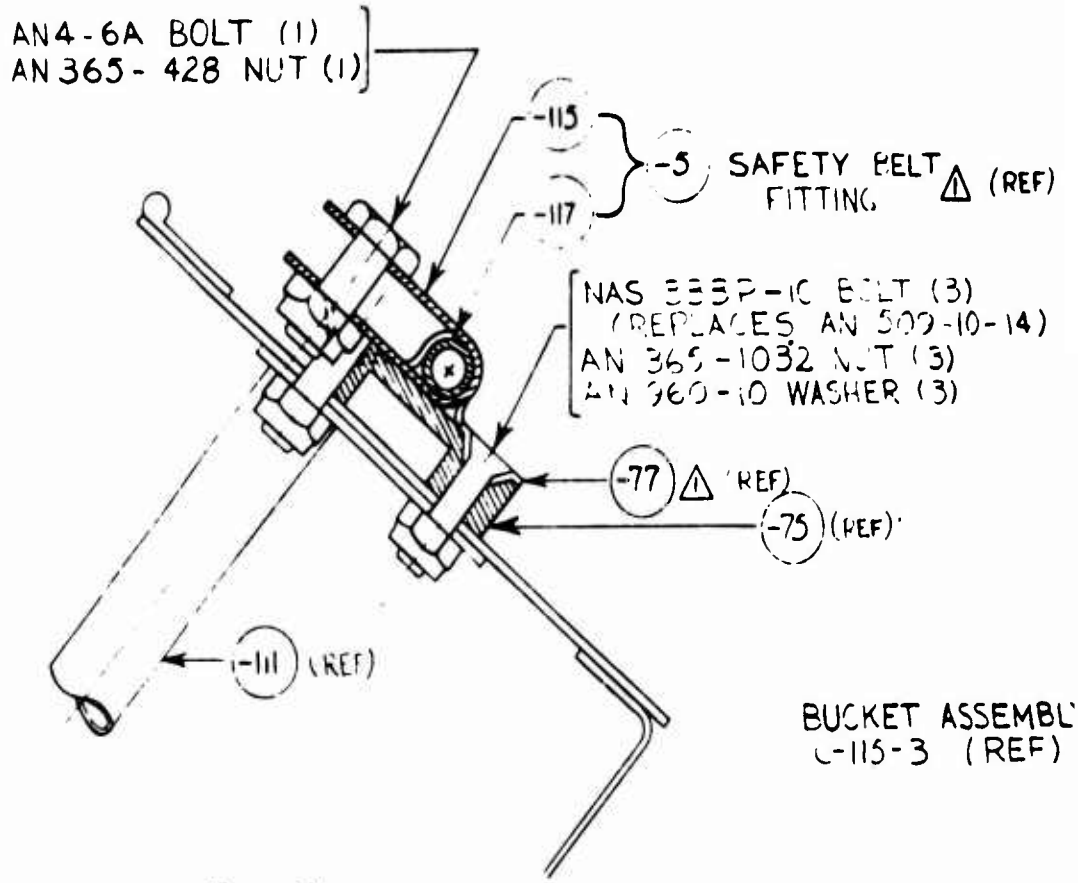


SECTION A-A FULL SIZE

△ RE-HEAT TREAT
180,000 PSI TO 200,000 PSI

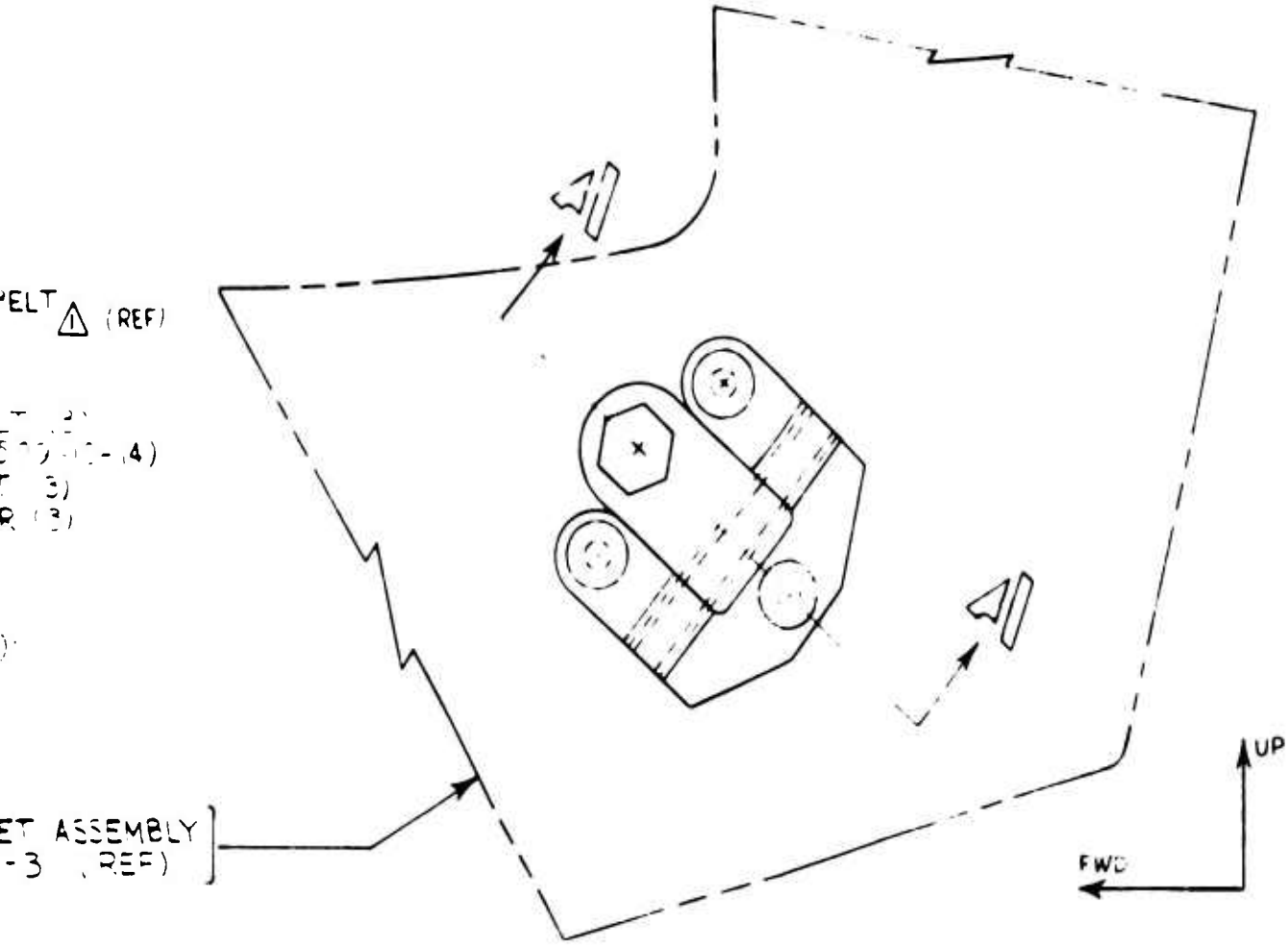
ELT (REF)
(4)
(3)
(3)
ET ASSEMBLY
-3 (REF)
UP
FWD

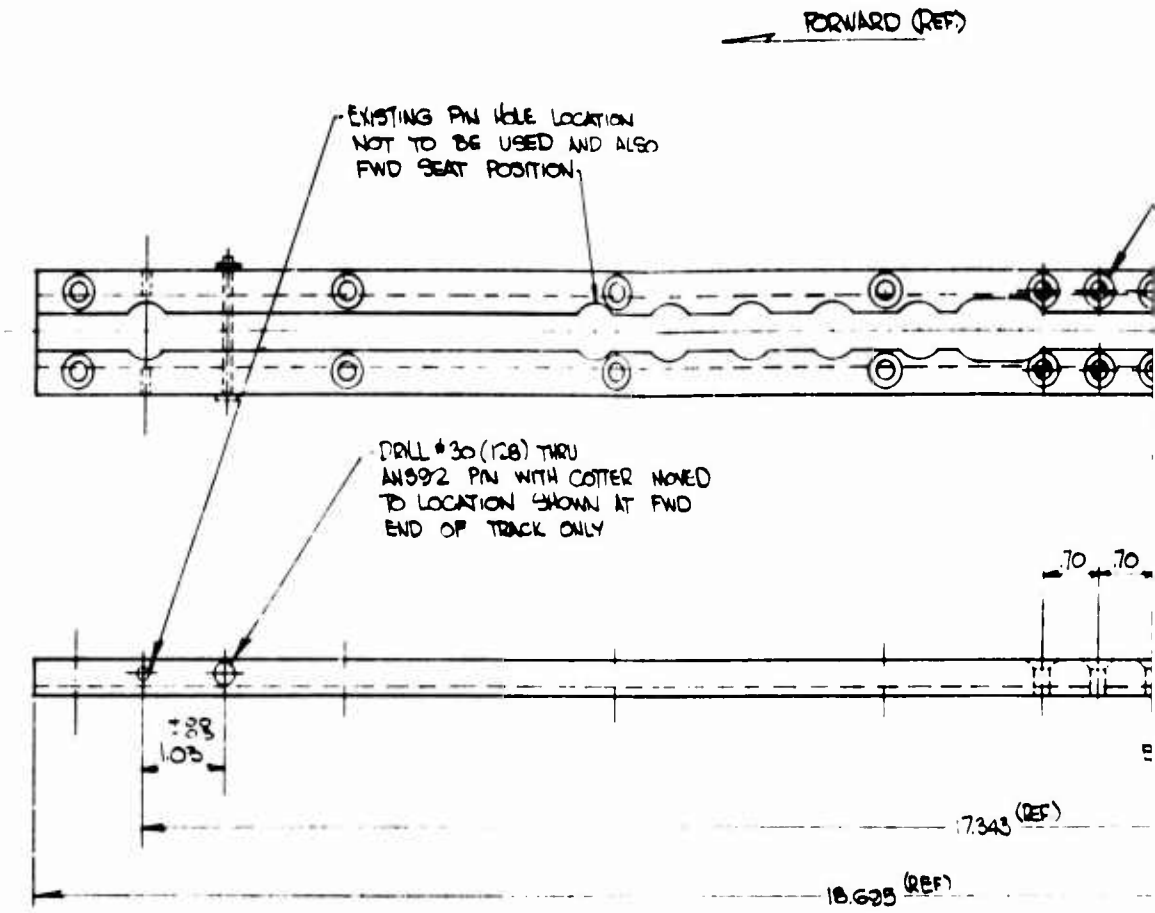


DETAIL - REWORKED TRACK SECTION
MADE FROM EXISTING AEROSMITH PART NR
C-115-8

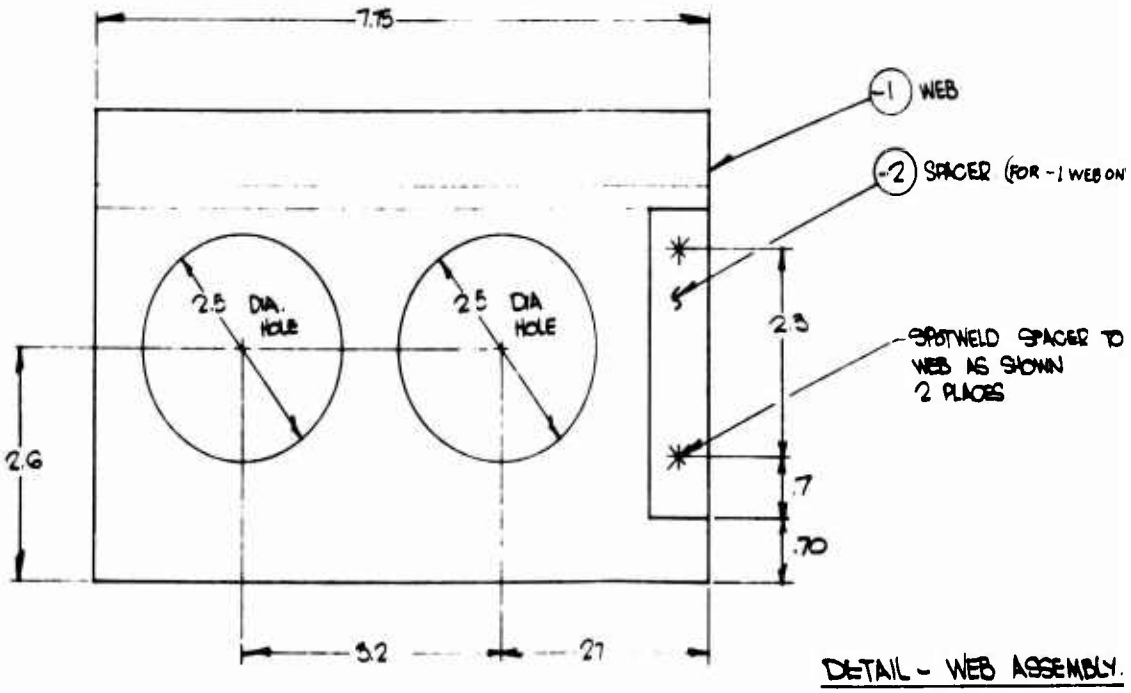


DETAIL - WEB ASSEMBLY.

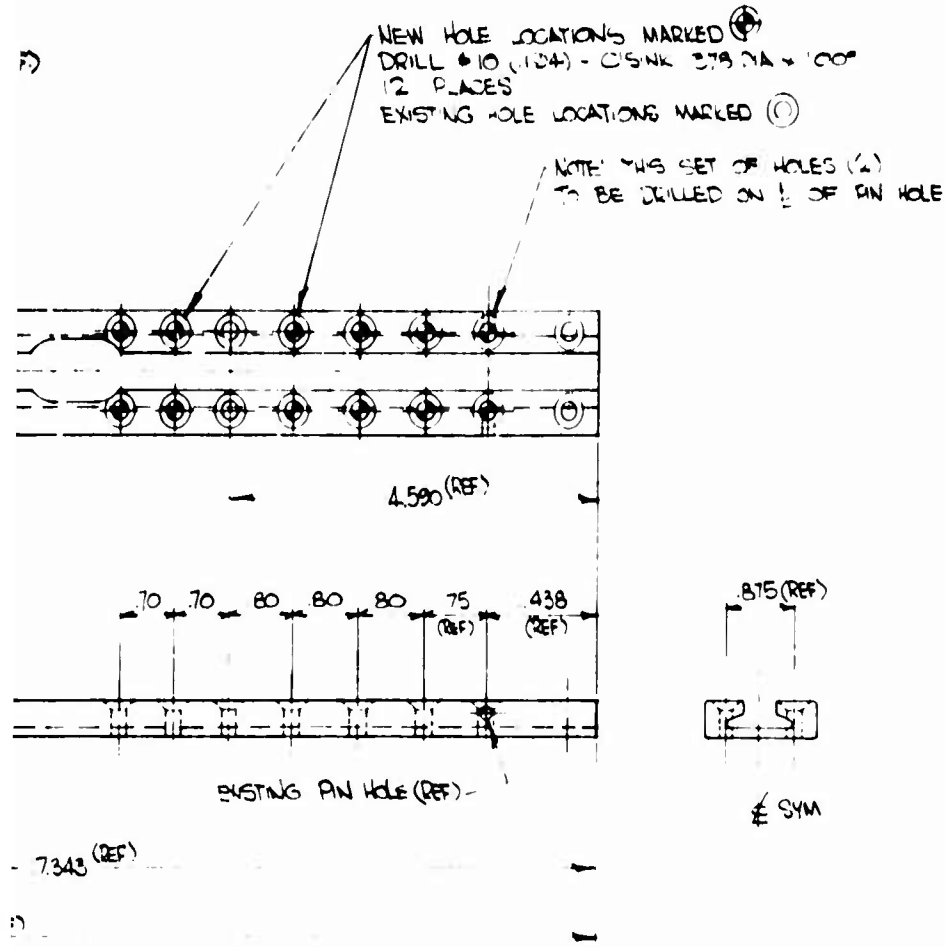


K SECTION
WITH PART NO

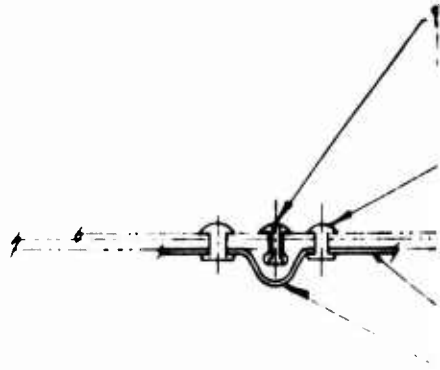

DETAIL C
TYPICAL THRU WEB AT BEAD
FULL SIZE

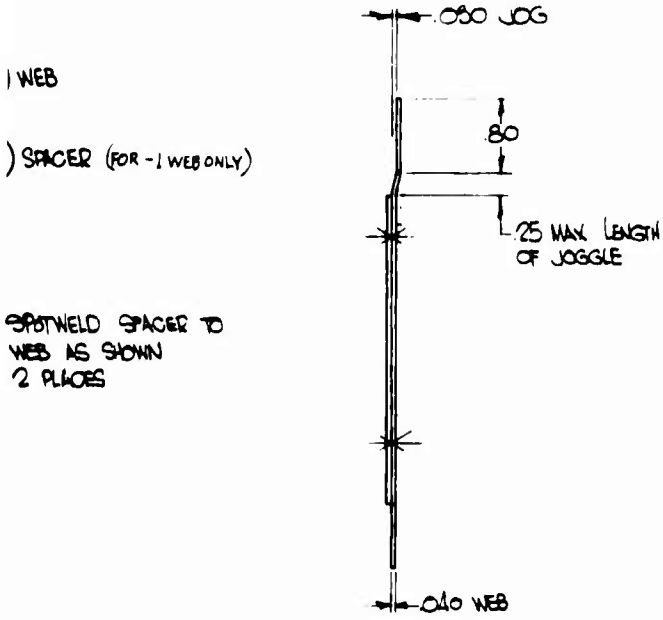


1 WEB

) SPACER (FOR -1 WEB ONLY)

SPOTWELD SPACER TO WEB AS SHOWN 2 PLACES

.- WEB ASSEMBLY.

2

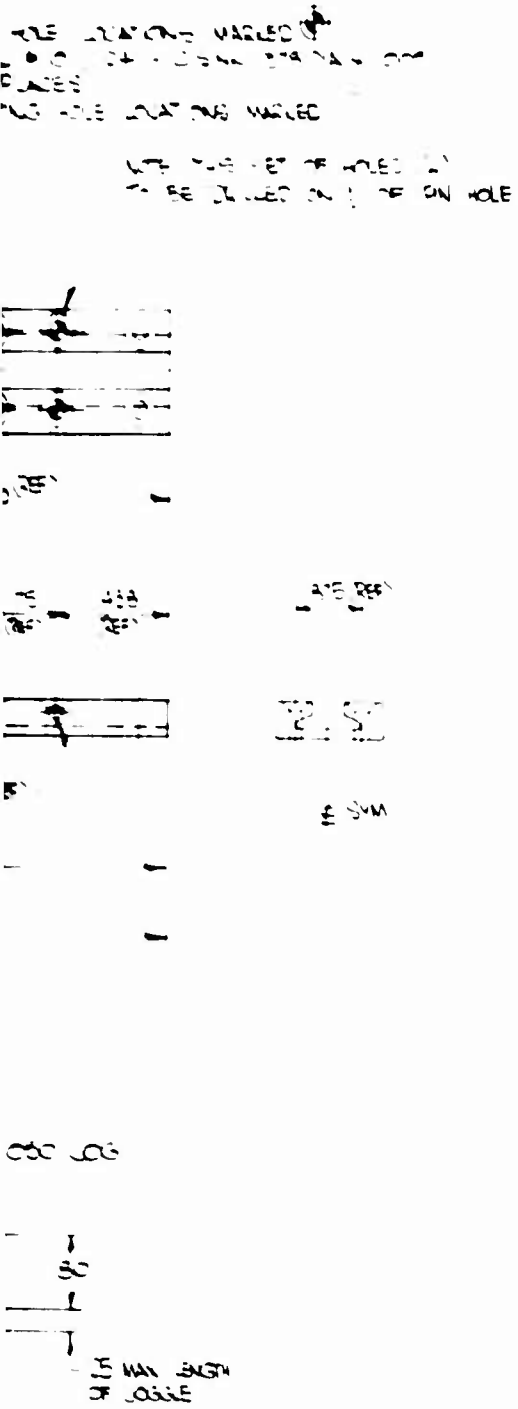


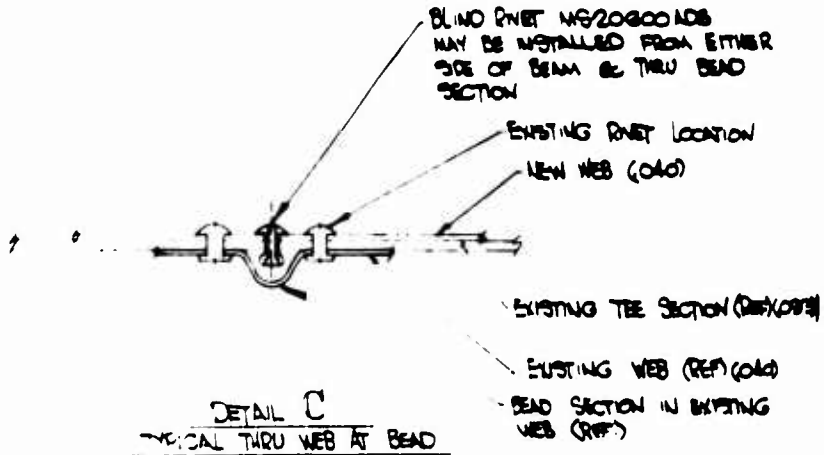


DETAIL C
TYPICAL THRU WEB AT BEAD
FULL SIZE

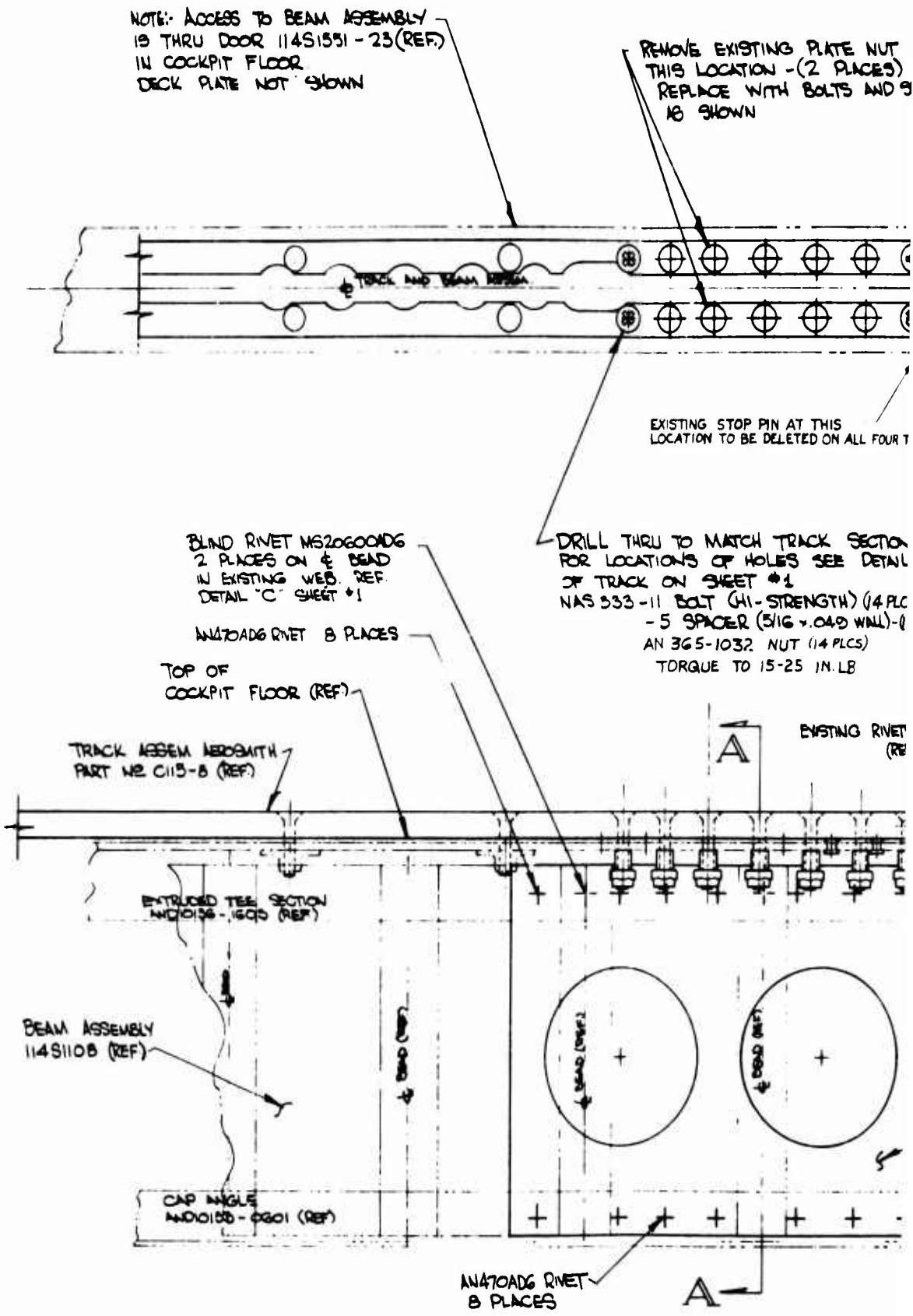
NOTE:- ACCESS TO BEAM ASSEMBLY IS THRU DOOR 114S1551-23 (REF.) IN COCKPIT FLOOR. DECK PLATE NOT SHOWN
REMOVE EXISTING PLATE NUT THIS LOCATION -(2 PLACES) REPLACE WITH BOLTS AND S AS SHOWN
EXISTING STOP PIN AT THIS LOCATION TO BE DELETED ON ALL FOUR T
BLIND RIVET MS20600AD6 2 PLACES ON ℄ BEAD IN EXISTING WEB. REF. DETAIL "C" SHEET #1
DRILL THRU TO MATCH TRACK SECTION FOR LOCATIONS OF HOLES SEE DETAIL OF TRACK ON SHEET #1
NAS 333-11 BOLT (HI-STRENGTH) (14 PLC
-5 SPACER (5/16 x .049 WALL)-(
AN 365-1032 NUT (14 PLCS)
TORQUE TO 15-25 IN. LB
AN470AD6 RIVET 8 PLACES
TOP OF COCKPIT FLOOR (REF)
TRACK ASSEM AEROSMITH PART NO. C115-8 (REF)
A
EXISTING RIVET (RE
EXTRUDED TEE SECTION AND0136-1605 (REF)
BEAM ASSEMBLY 114S1108 (REF)
℄ BEAD (REF)
CAP ANGLE AND0135-0601 (REF)
AN470AD6 RIVET 8 PLACES
A
-1 WEB INSTALLATION AT B.L.:-
31.07 LEFT
10.93 LEFT
11.93 RIGHT
114S1108-3 & -5 BEAM ASSEMBLIES. (REF

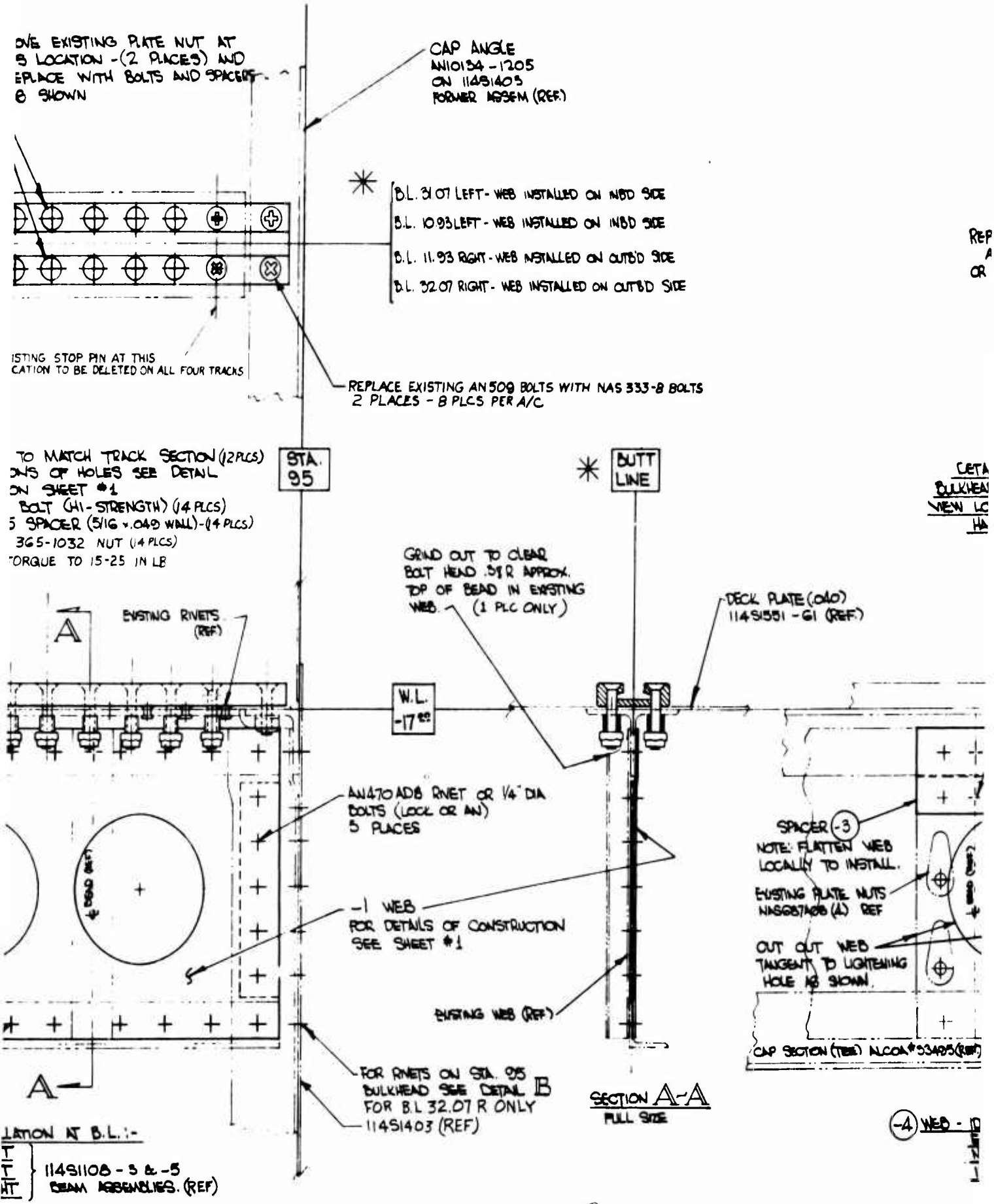
OVE EXISTING PLATE NUT AT
S LOCATION -(2 PLACES) AND
EPLACE WITH BOLTS AND SPACERS
S SHOWN
CAP ANGLE
AN10134-1205
ON 11451403
FORWER ASSEM (REF.)
B.L. 31.07 LEFT - WEB INSTALLED ON INBD SIDE
B.L. 10.93 LEFT - WEB INSTALLED ON INBD SIDE
B.L. 11.93 RIGHT - WEB INSTALLED ON OUTBD SIDE
B.L. 32.07 RIGHT - WEB INSTALLED ON OUTBD SIDE
ISTING STOP PIN AT THIS
CATION TO BE DELETED ON ALL FOUR TRACKS
REPLACE EXISTING AN509 BOLTS WITH NAS 333-8 BOLTS
2 PLACES - 8 PLCS PER A/C
TO MATCH TRACK SECTION (12 PLCS)
ONS OF HOLES SEE DETAIL
ON SHEET #1
BOLT (HI-STRENGTH) (14 PLCS)
5 SPACER (5/16 x .049 WALL) - (14 PLCS)
365-1032 NUT (14 PLCS)
TORQUE TO 15-25 IN LB
STA. 95
BUTT LINE
GRIND OUT TO CLEAR
BOLT HEAD .5" R APPROX.
TOP OF BEAD IN EXISTING
WEB. (1 PLC ONLY)
DECK PLATE (.040)
11451551-G1 (REF.)
EXISTING RIVETS
(REF)
A
W.L. -17.00
AN470AD8 RIVET OR 1/4" DIA
BOLTS (LOCK OR AN)
5 PLACES
SPACER -3
NOTE: FLATTEN WEB
LOCALLY TO INSTALL.
EXISTING PLATE NUTS
NAS687A08 (A) REF
-1 WEB
FOR DETAILS OF CONSTRUCTION
SEE SHEET #1
OUT OUT WEB
TANGENT TO LIGHTENING
HOLE AS SHOWN.
EXISTING WEB (REF)
CAP SECTION (TEE) ALCOA #53495 (REF)
FOR RIVETS ON STA. 95
BULKHEAD SEE DETAIL B
FOR B.L. 32.07 R ONLY
11451403 (REF)
SECTION A-A
FULL SIZE
-4 WEB
LATION AT B.L.:-
11451108-3 & -5
BEAM ASSEMBLIES. (REF)

ANGLE
04-1205
491403
R ASSEM (REF)

FT - WEB INSTALLED ON INBD SIDE
FT - WEB INSTALLED ON INBD SIDE
GHT - WEB INSTALLED ON OUTBD SIDE
GHT - WEB INSTALLED ON OUTBD SIDE

AN509 BOLTS WITH NAS 333-8 BOLTS
CS PER A/C

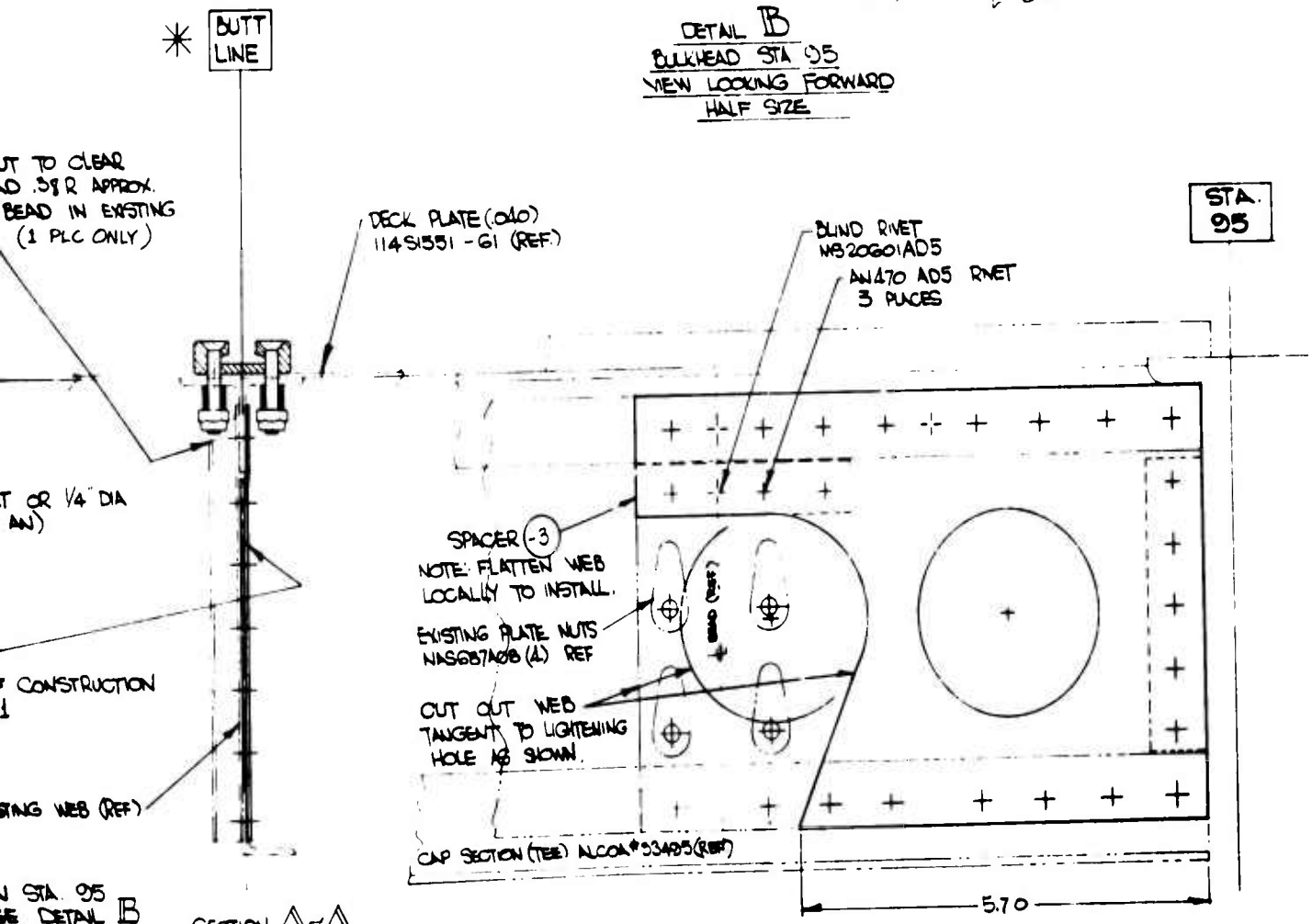


-4 WEB - IDENTICAL TO -1 WEB EXCEPT AS SHOWN
NOTE: USED AT B.L. 32.07
11491108-7 BEAM ASSEMBLY ONLY



3

1

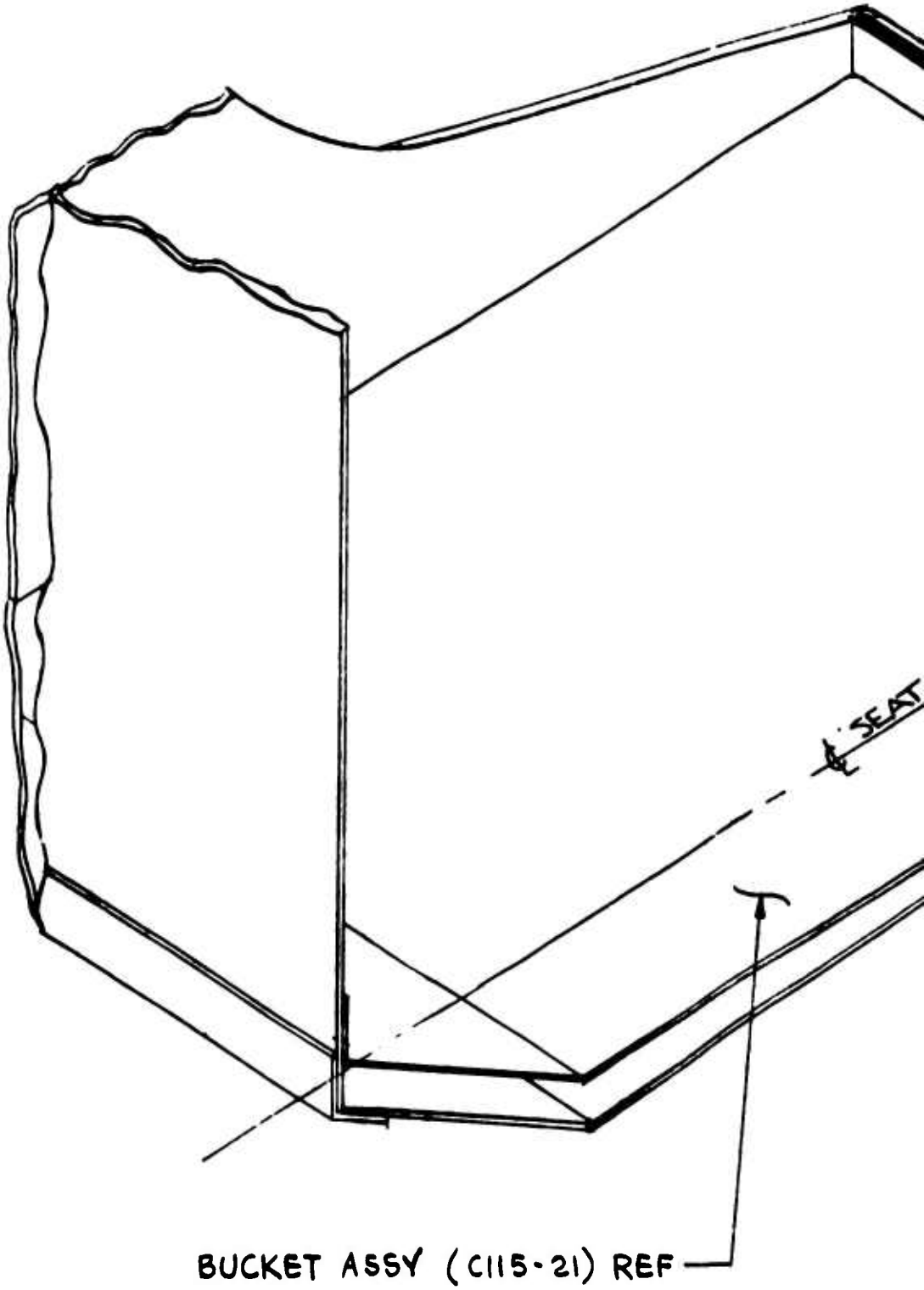
℄ SEAT
BUCKET ASSY (C115-21) REF

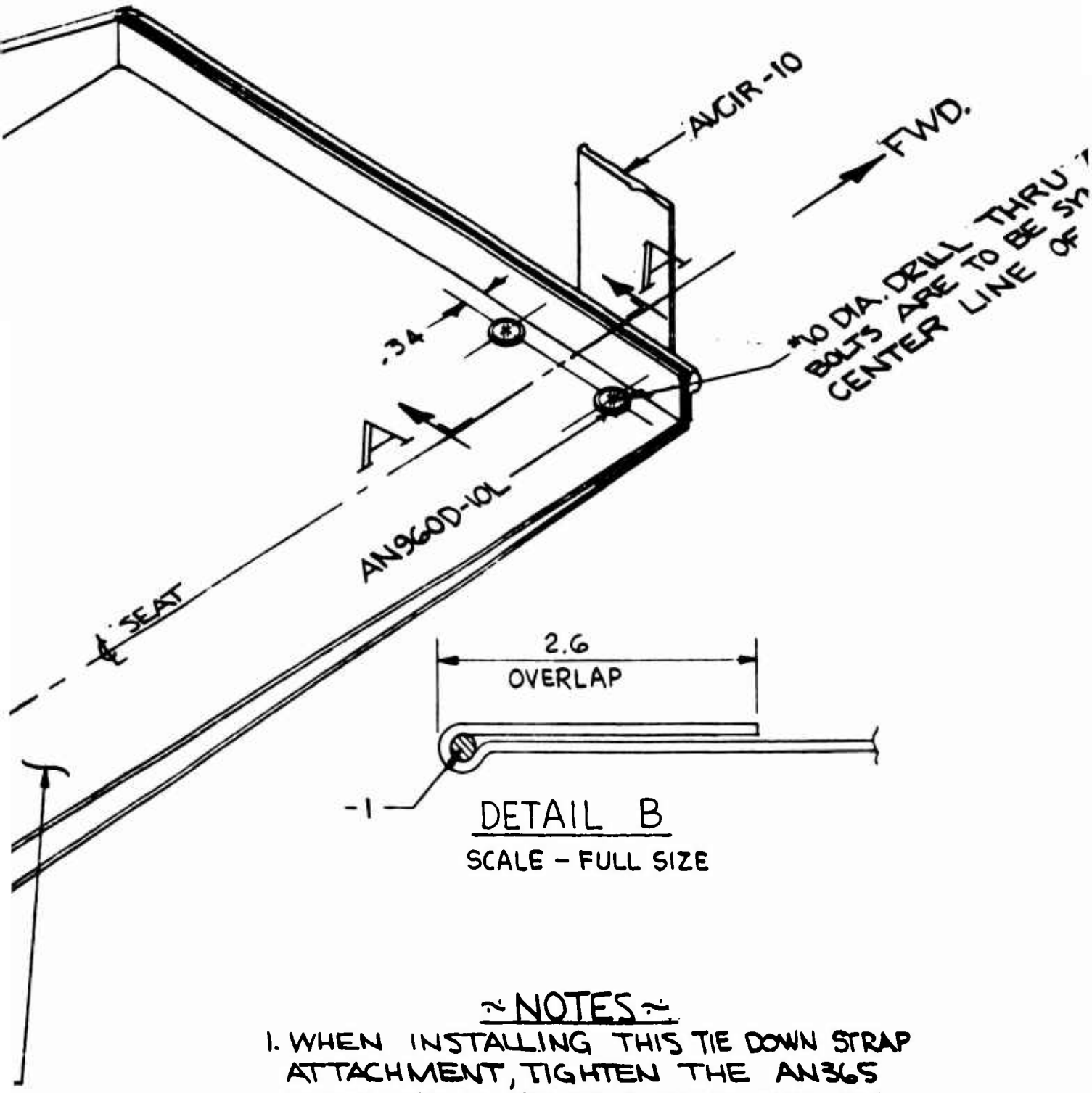


DETAIL B

SCALE - FULL SIZE

## ~ NOTES ~

1. WHEN INSTALLING THIS TIE DOWN STRAP ATTACHMENT, TIGHTEN THE AN365 NUTS SO THAT THE TWO BOTTOM SHEETS OF THE BUCKET ARE IN CONTACT.
2. CUSHION IS NOT SHOWN.
3. CEMENT DETAIL-1 TO WEBBING BEFORE CLAMPING. USE WEAK CEMENT.

THRU AT ASSY.
TO BE SYMMETRIC WITH
LINE OF SEAT.

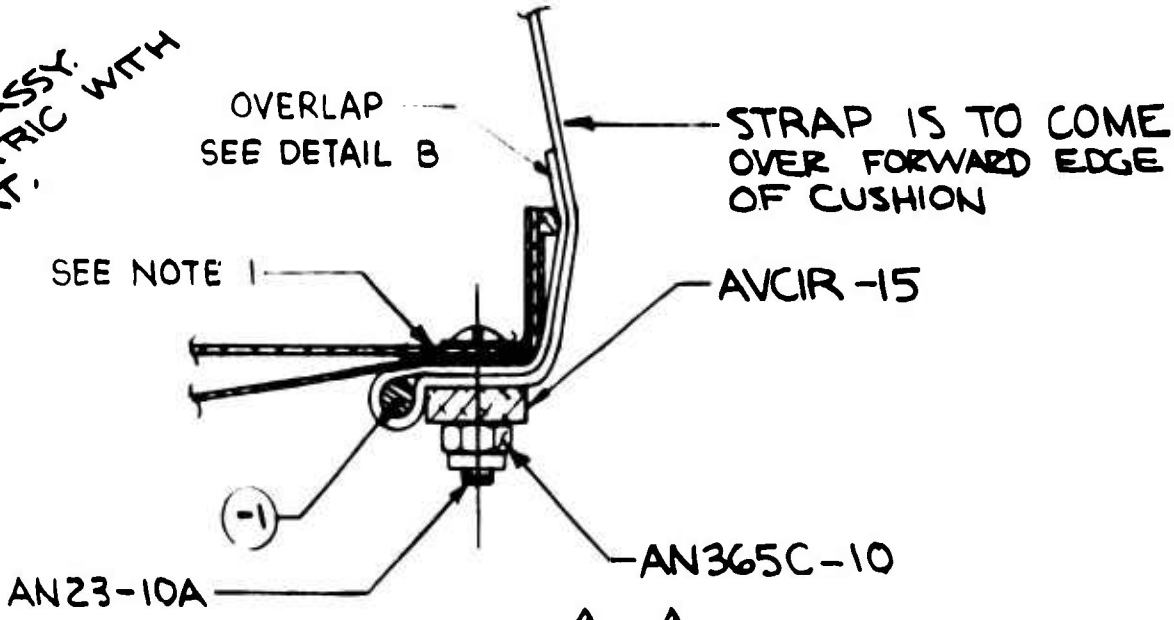


SECTION A-A FULL SIZE

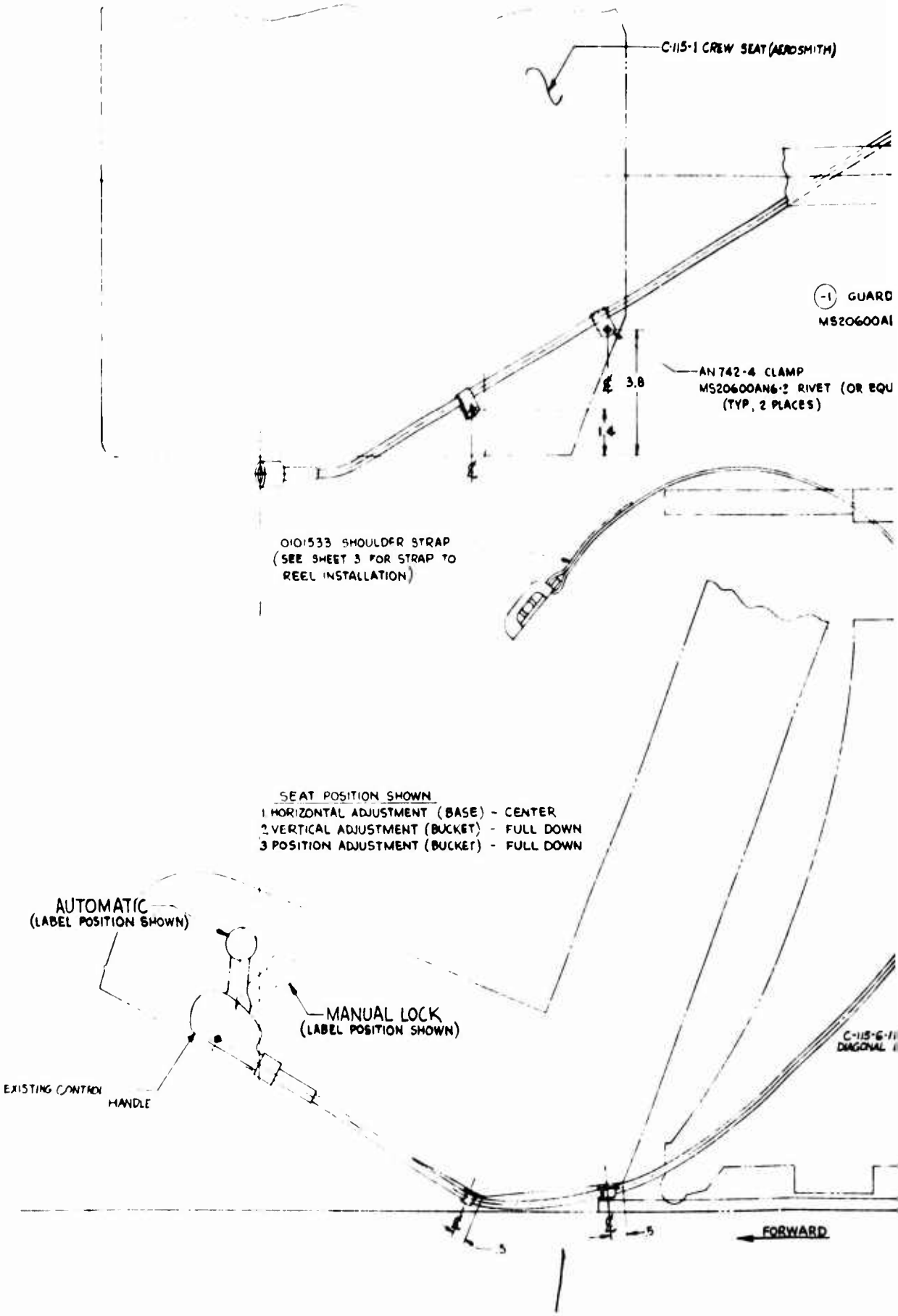
C-115-1 CREW SEAT (AEROSMITH)
-1 GUARD
MS20600A1
AN 742-4 CLAMP
MS20600AN6-2 RIVET (OR EQU
(TYP, 2 PLACES)
3.8
1.4
0101533 SHOULDER STRAP
(SEE SHEET 3 FOR STRAP TO
REEL INSTALLATION)
SEAT POSITION SHOWN
1 HORIZONTAL ADJUSTMENT (BASE) - CENTER
2 VERTICAL ADJUSTMENT (BUCKET) - FULL DOWN
3 POSITION ADJUSTMENT (BUCKET) - FULL DOWN
AUTOMATIC
(LABEL POSITION SHOWN)
MANUAL LOCK
(LABEL POSITION SHOWN)
EXISTING CONTROL
HANDLE
C-115-6-11
DIAGONAL
5
5
FORWARD

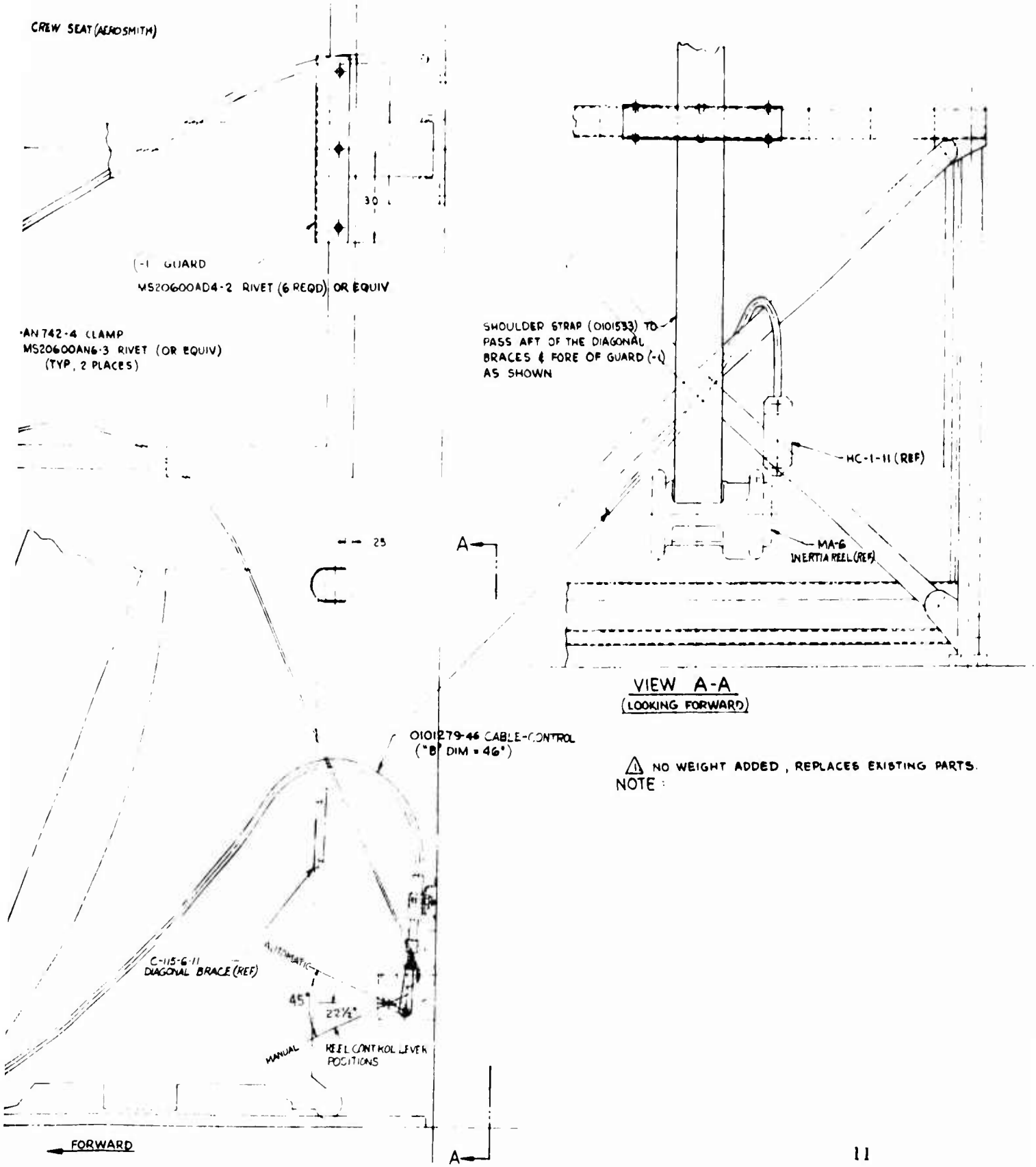
CREW SEAT (AEROSMITH)
30
(-1 GUARD
MS20600AD4-2 RIVET (6 REQD) OR EQUIV
AN 742-4 CLAMP
MS20600AN6-3 RIVET (OR EQUIV)
(TYP, 2 PLACES)
SHOULDER STRAP (0101533) TO PASS AFT OF THE DIAGONAL BRACES & FORE OF GUARD (-1) AS SHOWN
HC-1-11 (REF)
MA-6 INERTIA REEL (REF)
25
A
VIEW A-A
(LOOKING FORWARD)
0101279-46 CABLE-CONTROL
("B" DIM = 46")
NOTE: NO WEIGHT ADDED, REPLACES EXISTING PARTS.
C-115-6-11
DIAGONAL BRACE (REF)
AUTOMATIC
45°
22½°
MANUAL
REEL CONTROL LEVER POSITIONS
FORWARD
A

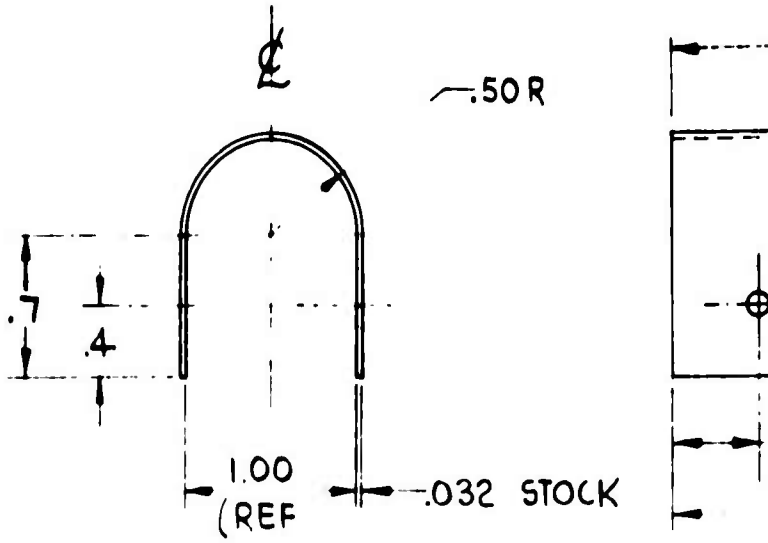


DETAI

SCALE ~

2. ZINC CHROMATE ALL OVER.

1. REMOVE ALL BURRS.

NOTE :

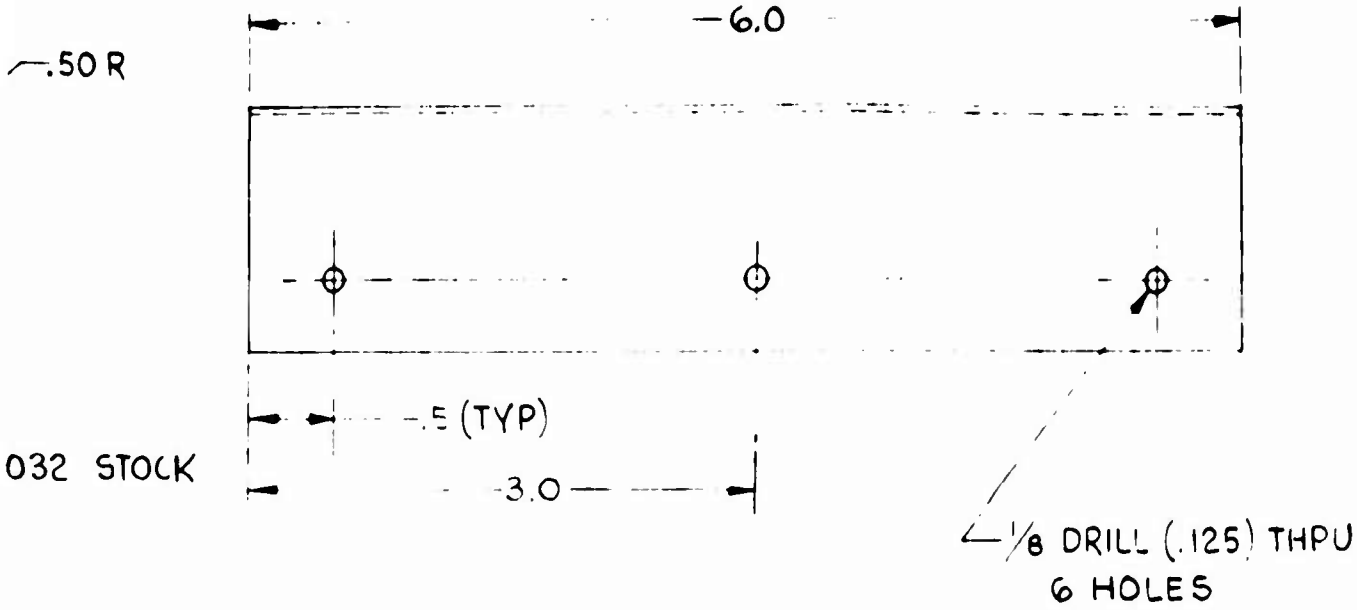


DETAIL -1

SCALE ~ FULL SIZE

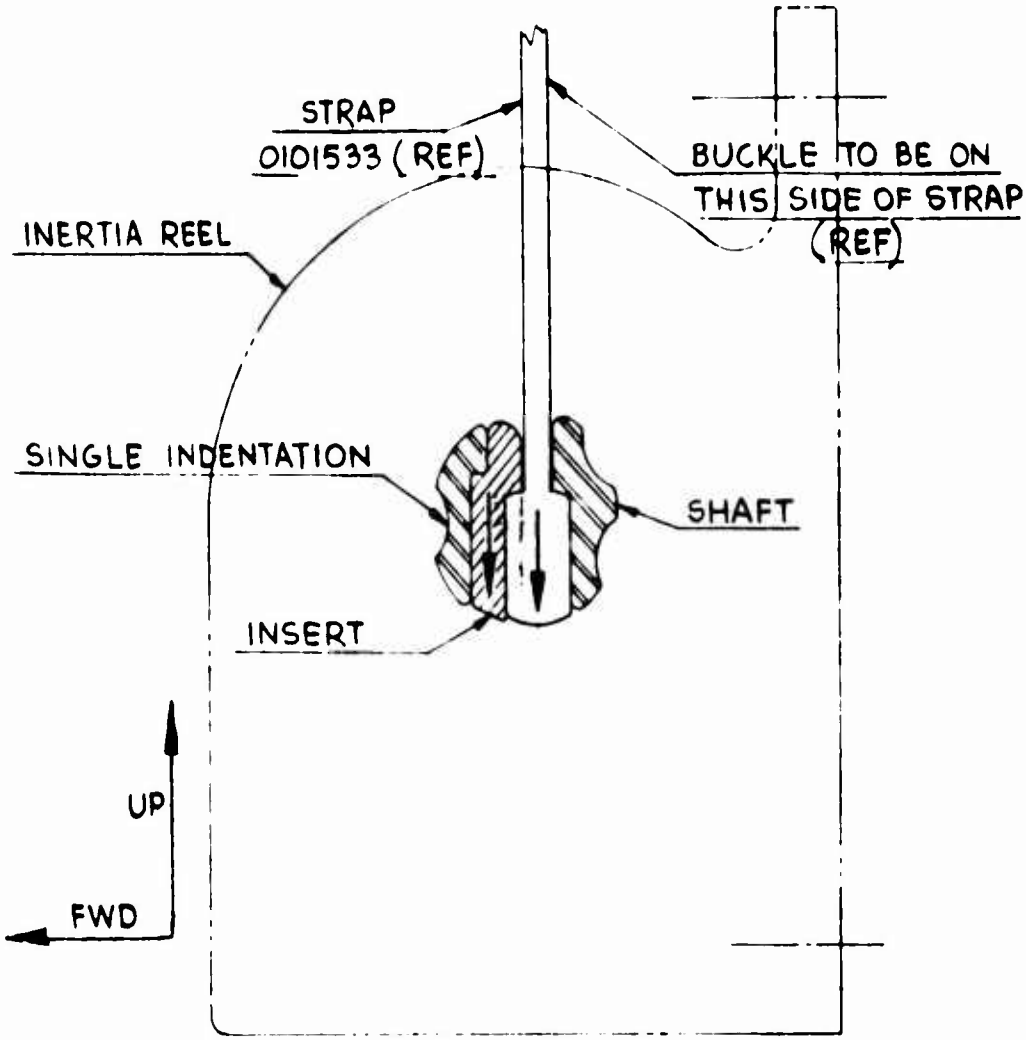


## SHOULDER STRAP TO REEL INSTALLATION

STRAP REMOVAL – FULLY EXTEND STRAP AND RETAIN FROM FURTHER ROTATION BY HOLDING WITH 7/32 HEX WRENCH IN HOLE PROVIDED. MOVE BOTH STRAP AND INSERT IN DIRECTION OF ARROWS. REMOVE INSERT AND PULL STRAP BACK THRU OPENING.

STRAP REPLACEMENT – REVERSE ABOVE PROCEDURE. INSTALL INSERT TOWARDS SIDE OF SHAFT WITH SINGLE INDENTATION. (CAUTION :- SPRING MUST BE 1/2 TO 1 1/2 REV'S BACK FROM TIGHT).

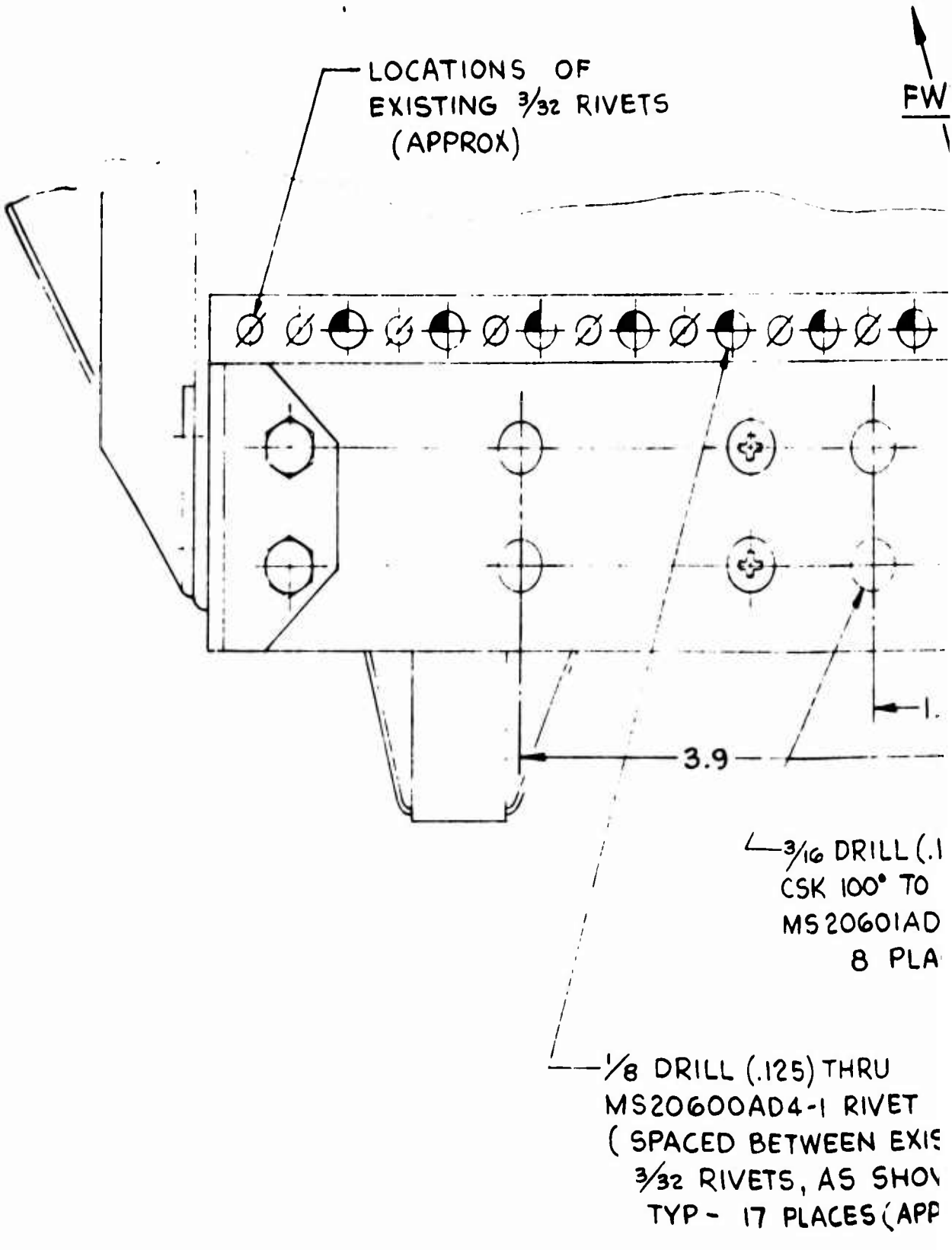
LOCATIONS OF
EXISTING 3/32 RIVETS
(APPROX)
FW
3.9
1.
3/16 DRILL (.1
CSK 100° TO
MS20601AD
8 PLA
1/8 DRILL (.125) THRU
MS20600AD4-1 RIVET
( SPACED BETWEEN EXIS
3/32 RIVETS, AS SHOV
TYP - 17 PLACES (APP

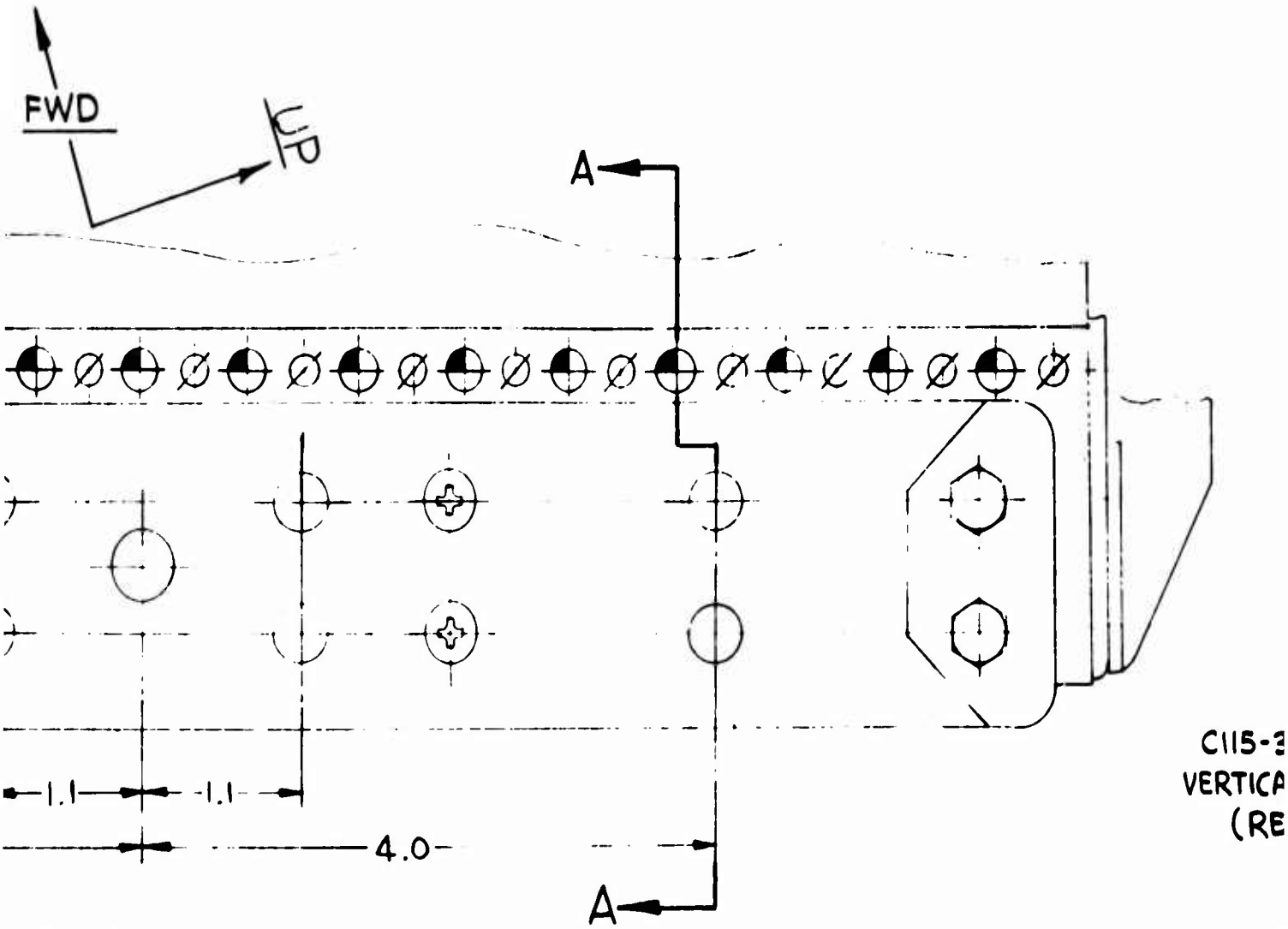


C115-3
VERTICA
(RE

.L (.187) THRU
TO .370 DIA
)IAD6-4 RIVET
PLACES

)
ET
EXISTING
HOWN)
(APPROX)

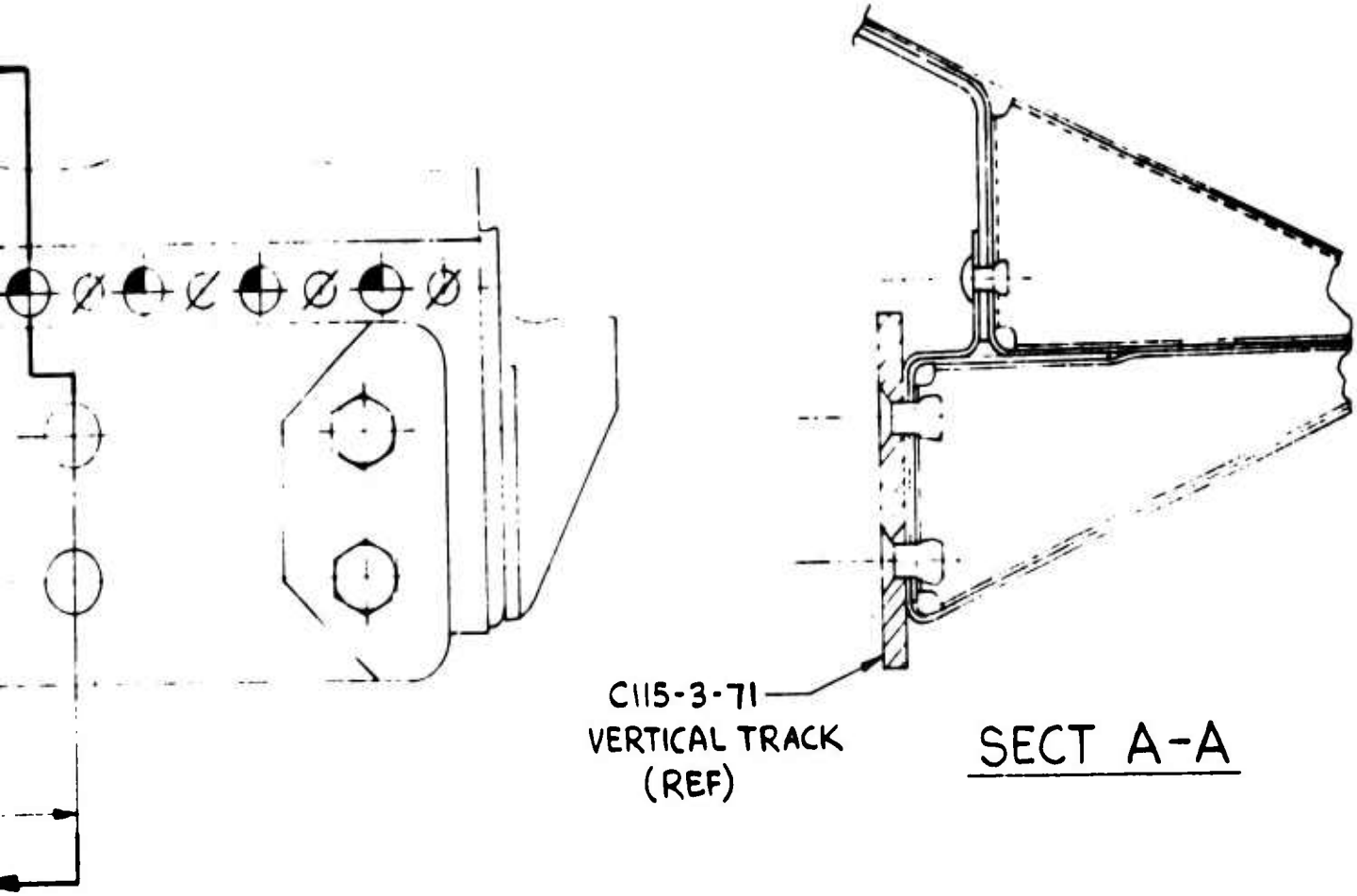
C115-3-71
VERTICAL TRACK
(REF)
SECT A-A

(-2) BOLT-SPECIAL
(-6) SLIDE
(-10) SHIM
AN960C616L (WASHER)
NAS1022A6 (NUT)

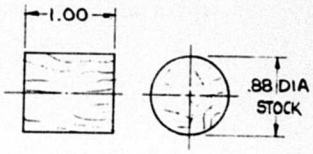


DETAIL -3

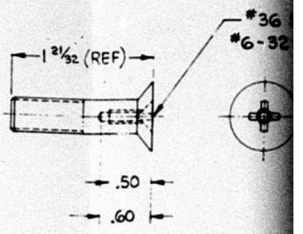


DETAIL -2

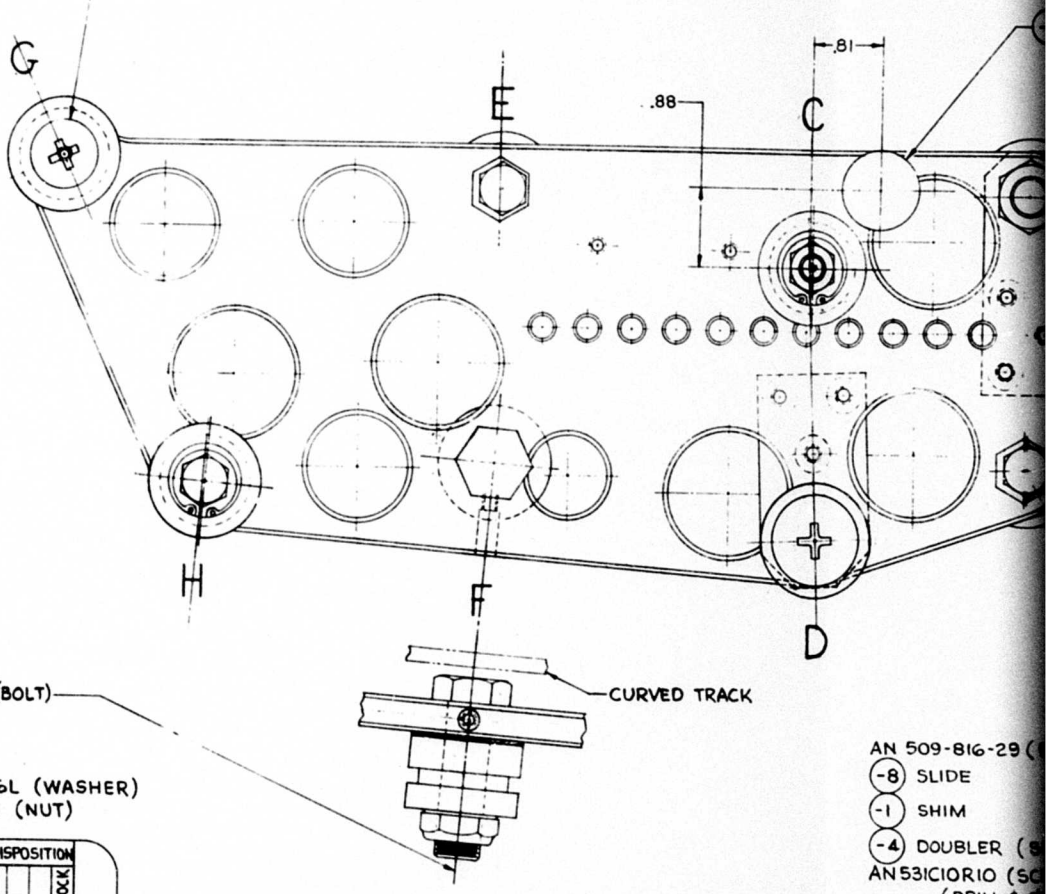


AN8-14A (BOLT)
(-12) SHIM
(-9) SLIDE
AN960C816L (WASHER)
NAS1022A8 (NUT)

AN 509-816-29 (
(-8) SLIDE
(-1) SHIM
(-4) DOUBLER (S
AN531C10R10 (SC
(DRILL. & C
AN960C816L (WA
NAS1022A8 (N

| LOCATION | | | DISPOSITION | | | | REMARKS |
|---|---|---|---|---|---|---|---|
| SYMBOL | NEAR SIDE | FAR SIDE | NO CHANGE | RELOCATE | NEW | RETURN TO STOCK | |
| A | | ✓ | | | ✓ | ✓ | 7/16 DIA BOLT, NUT, WASHER, DOUBLER, SHIM & SLIDE REPLACES FIXED ROLLER ASSY & ASSOC. PARTS |
| B | | ✓ | ✓ | | | | NONE |
| C | ✓ | | | ✓ | | ✓ | USE EXISTING ADJUSTABLE ROLLER ASSY & ASSOC. PARTS REMOVED FROM LOCATION "D" (REVERSE BOLT) |
| D | ✓ | | | | ✓ | | ½ DIA BOLT, NUT, WASHER, DOUBLER, SHIM & SLIDE REPLACES ADJUSTABLE ROLLER ASSY & ASSOC. PARTS. |
| E | | ✓ | | ✓ | | ✓ | USE EXISTING ADJUSTABLE ROLLER ASSY & ASSOCIATED PARTS REMOVED FROM LOCATION "F" |
| F | | ✓ | | | ✓ | | ½ DIA BOLT, NUT, WASHER, SHIM & SLIDE REPLACES ADJUSTABLE ROLLER ASSY & ASSOCIATED PARTS NOTE : |
| G | ✓ | | | | ✓ | ✓ | 3/8 DIA BOLT, NUT, WASHER, DOUBLER, SHIM & SLIDE REPLACES FIXED ROLLER ASSY & ASSOC. PARTS NOTE : DRILLED BOLT REQD FOR SHROUD MOUTING |
| H | ✓ | | ✓ | | | | NONE |

ASSY OF HC-1-21L (LEFT HAND

1. P
M
L
T

NOT

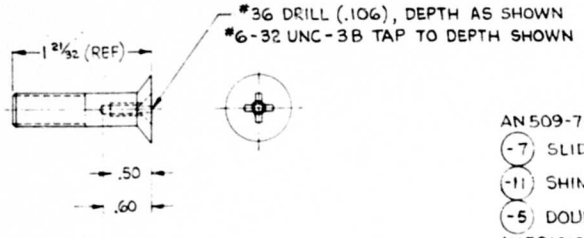


DETAIL -2

AN509-716-25 (BOLT)
(-7) SLIDE
(-11) SHIM
(-5) DOUBLER (SEE NOTE 1)
AN531C10R10 (SCREW) 3 REQD
(DRILL & C'SK PER NOTE 1)
AN960C716L (WASHER)
NAS1022A7 (NUT)

EXISTING PARTS

BOLT (AN5-14A)
ECCENTRIC BUSHING (C115-5-15)
SPACER (C115-5-17)
WASHER (AN960-716L) AS REQD.
ROLLER ASSY [CONSISTS OF ROLLER (C115-5-13), BEARING-BALL (AN201KP5A) 2 REQD., AND RING-RETAINING (NAS50-81) 2 REQD.]
SCREW-SET (AN565D8H14)
NUT (AN364-524)
(TYP 4 PLACES AT B, C, E, & H)

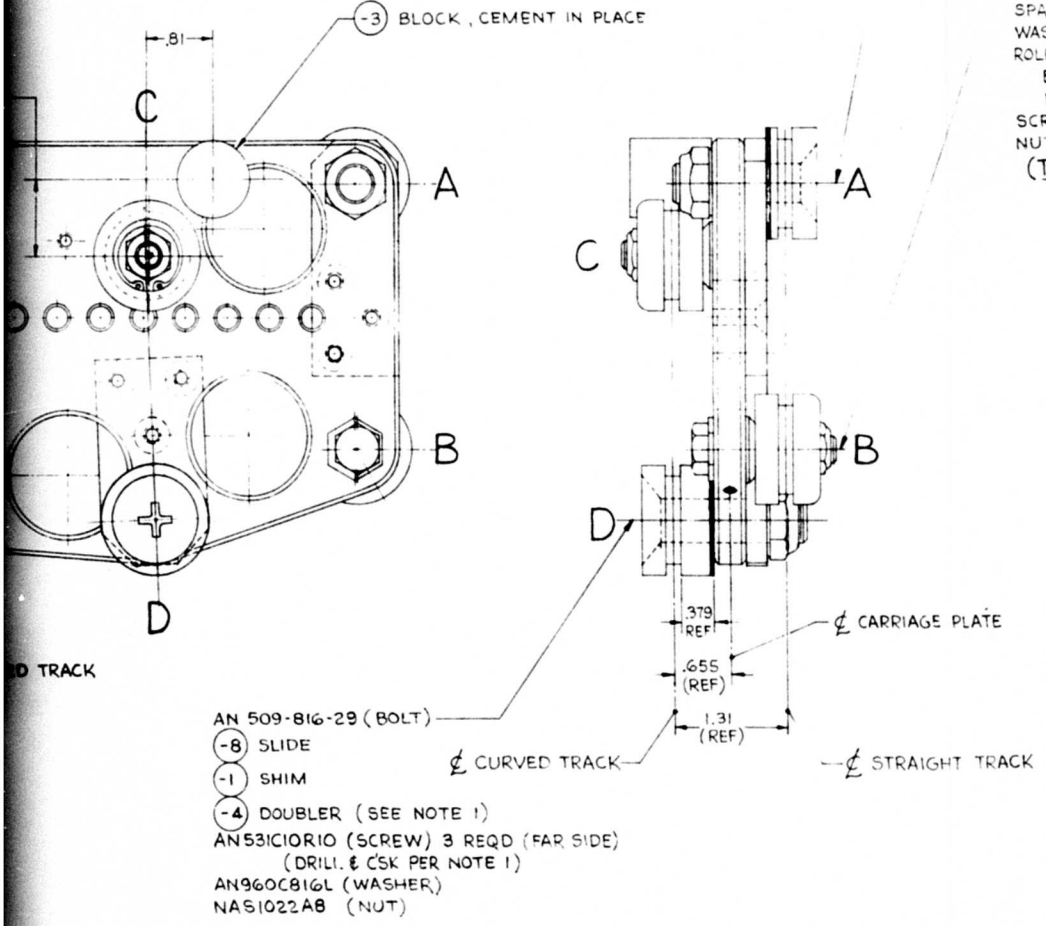


SY OF HC-1-21L (LEFT HAND) SHOWN HERE, (RIGHT HAND OPPOSITE).

NOTES:

1. POSITION DOUBLERS AS SHOWN AND WITH BOLT HOLE ALIGNED MATCH DRILL THRU DOUBLERS & PLATE USING #19 DRILL (.166), LOCATE FROM PILOT HOLES IN DOUBLERS. COUNTERSINK 82° TO .400 DIA. IN DOUBLERS AS INDICATED (6 PLACES FAR SIDE).



2

3/8 DRILL (.375) THRU
WAS 5/16 REAM THRU
SEE NOTES 1 & 2

#29 DRILL (.136) THRU
C'SK 100° TO .187 DIA (MAX.)
#8-32 NC-3 TAP THRU
SEE NOTE 1

#29 DRILL (.136) THRU
#16 C'DRILL (.177) .75
#8-32 NC-3 TAP THRU
SEE NOTE 1

SECT A-A

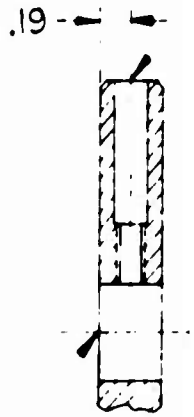


SECT B-

1/2 DRILL (.500) THRU
WAS 5/16 REAM, THRU
SEE NOTES 1 & 2

1/2 DRILL (.500
WAS 5/16 REAM
SEE NOTES 1

2. THESE HOLES TO BE SQUARE WITH "PLATE" W

1. CAUTION — THIS "PLATE" IS "HARD ANODIZED"
BE NECESSARY TO FACILITATE MACHINING.

NOTES :

) THRU
M. THRU
& 2

6, THRU
77) .75 DEEP
TAP THRU

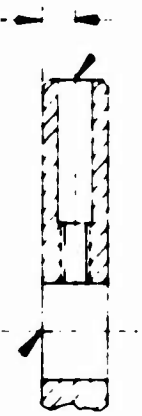

ECT B-B

L (.500) THRU
6 REAM, THRU
OTES 1 & 2.

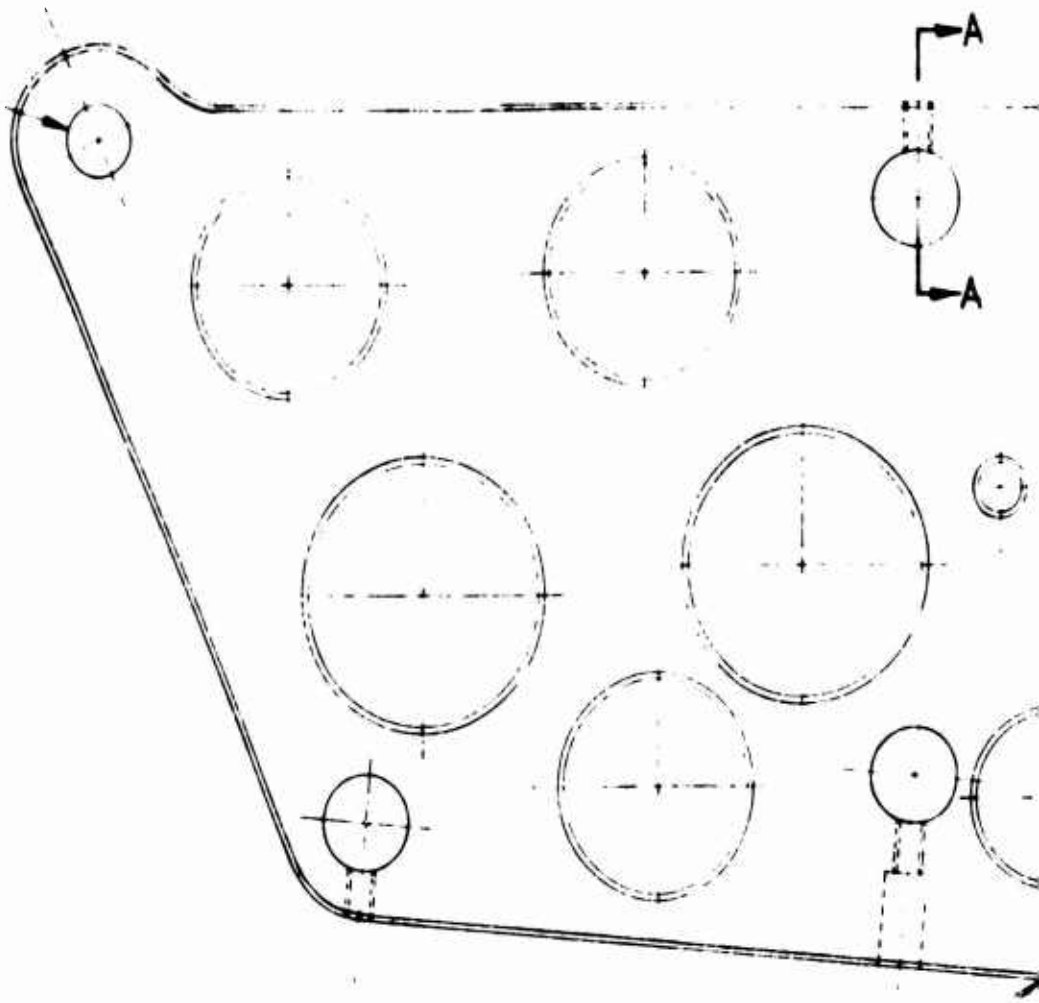


DETAIL -1
REWORK "AEROSMITH" PART #C115-5-11
(ROLLER PLATE) AS SHOWN.

LATE" WITHIN .002 PER INCH.

DIZED", LOCAL GRINDING MAY
INING.

2

1

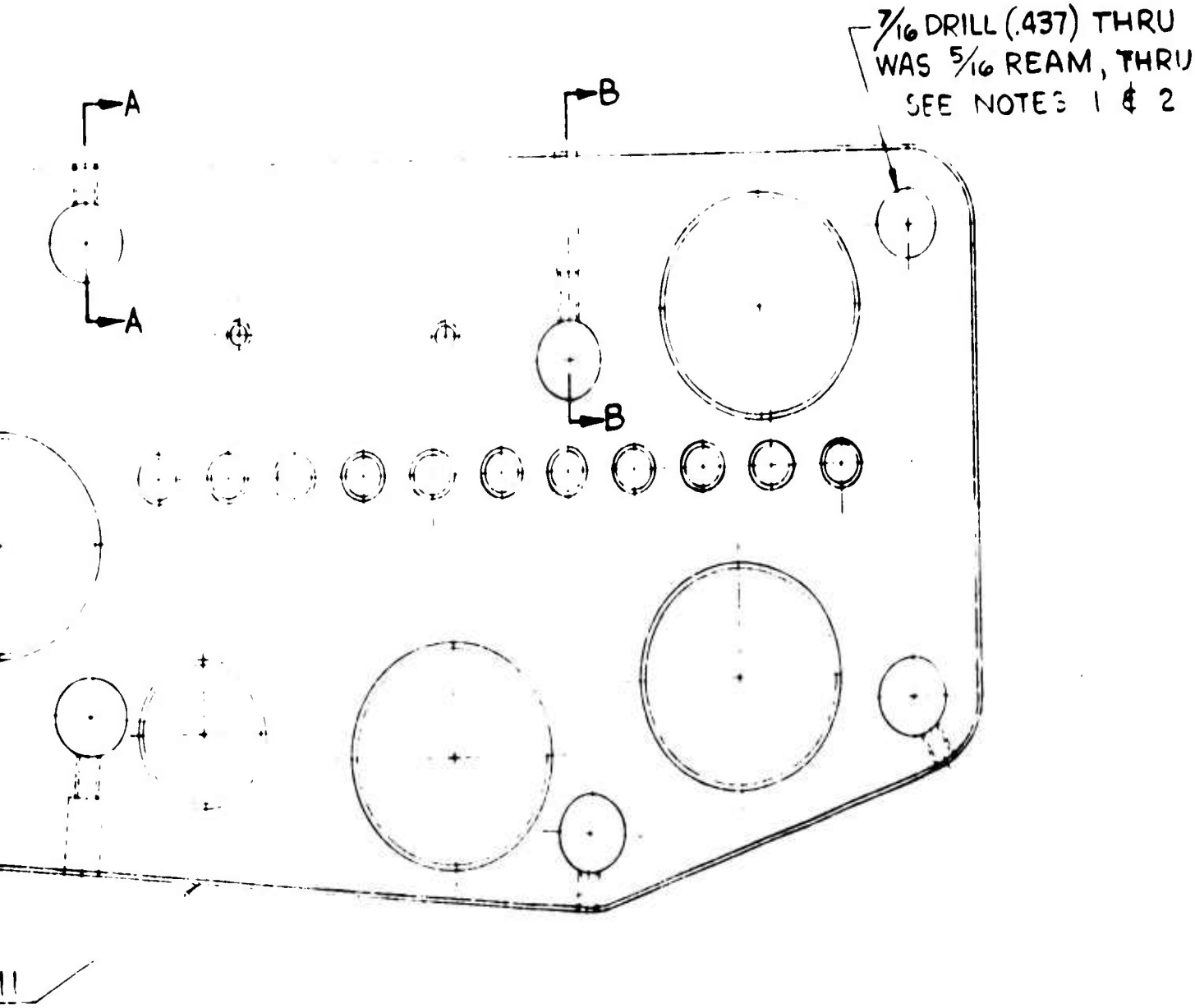




3

1

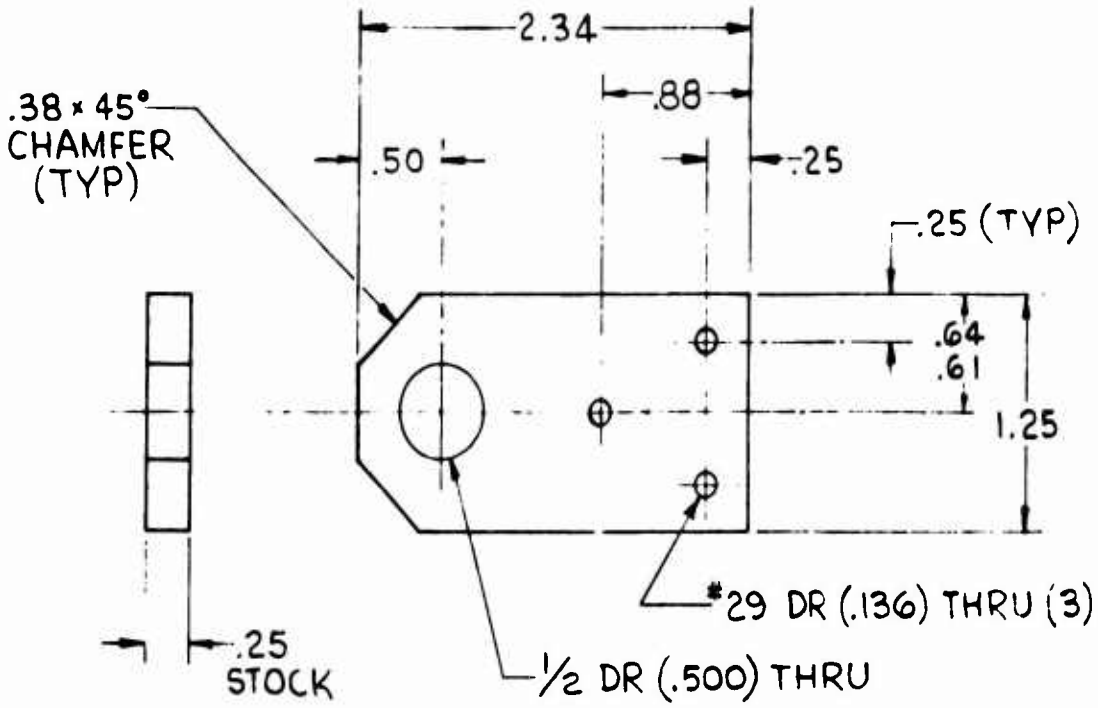
2.34
.88
.38 × 45°
CHAMFER
(TYP)
.50
.25
.25 (TYP)
.64
.61
1.25
#29 DR (.136) THRU (3)
.25
STOCK
½ DR (.500) THRU

DETAIL - 4

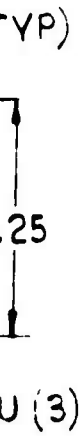
TYP)
.25
U (3)

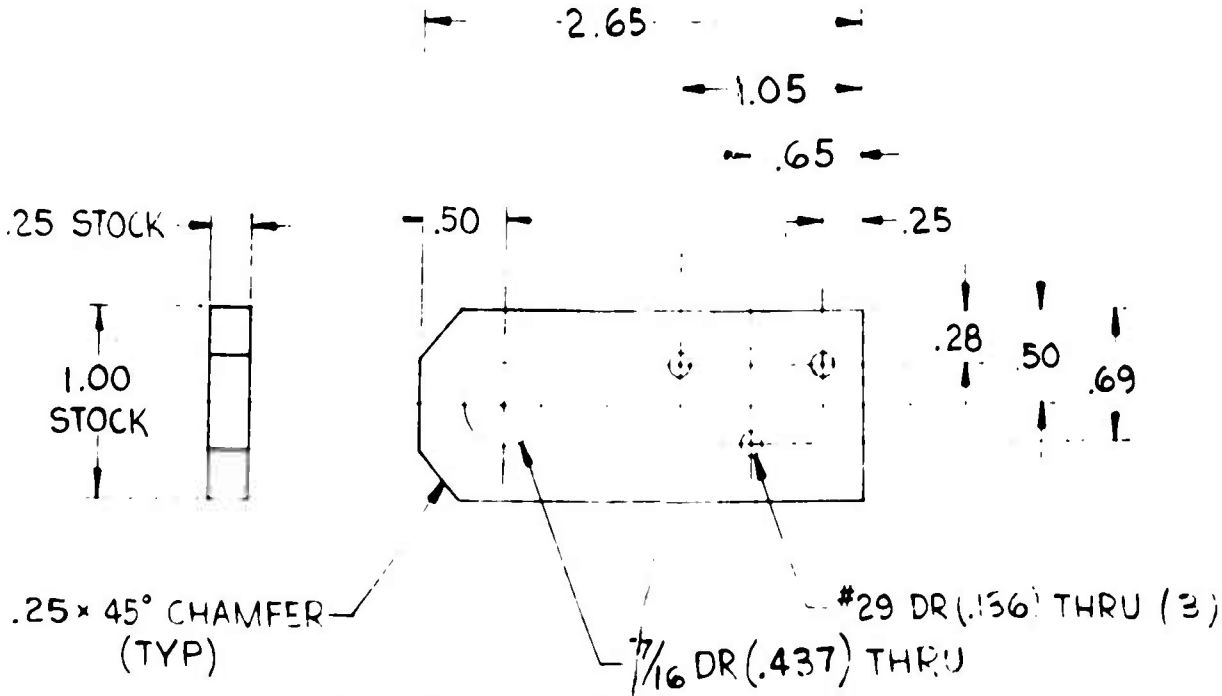
2.65
1.05
.65
.25 STOCK
.50
.25
1.00
STOCK
.28
.50
.69
.25 × 45° CHAMFER
(TYP)
#29 DR (.136) THRU (3)
7/16 DR (.437) THRU

DETAIL - 5

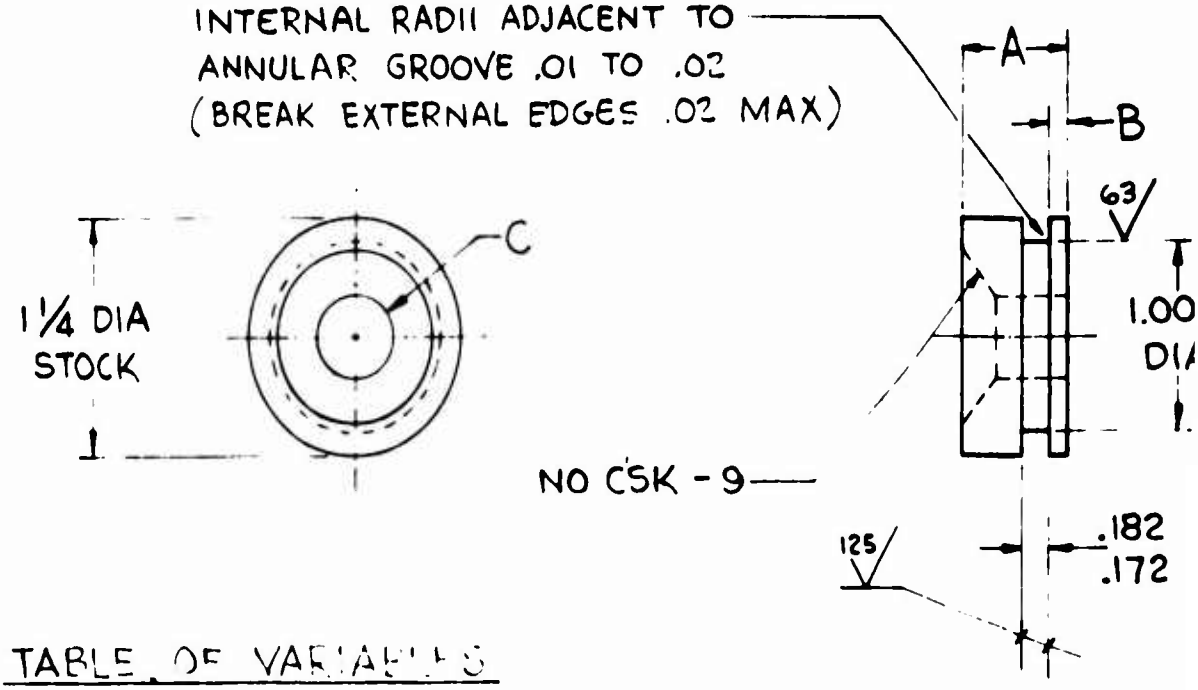


TABLE OF VARIABLES

| DASH NO. | A | B | C |
|---|---|---|---|
| -6 | .81 | .360 | 3/8 DRILL (.375) THRU CSK 100° TO .770 DIA. |
| -7 | .56 | .110 | 7/16 DRILL (.437 THRU) CSK. 100° TO .900 DIA. |
| -8 | .56 | .110 | 1/2 DRILL (.500) THRU CSK 100° TO 1.030 DIA. |
| -9 | .81 | .360 | 1/2 DRILL (.500) THRU |

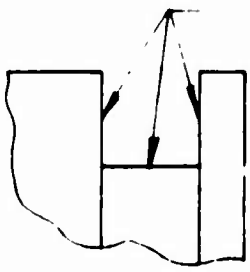

— THESE SURFACES TO BE LUBRICATED VIA "DRY FILM/ELECTROFILM" PROCESS AS PER NOTES 2 & 3 OR EQUIV. PROCESS.
VENDOR HAS OPTION TO APPLY LUBRICATING PROCESS ALL OVER.

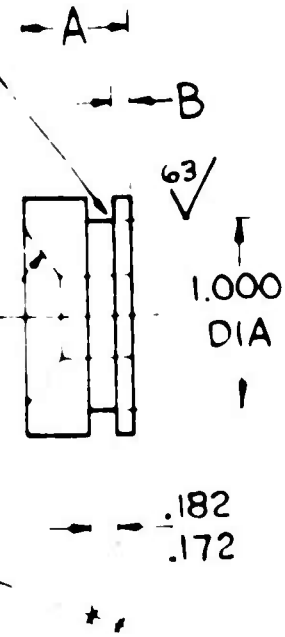


NOTES:

1. REMOVE ALL BURRS
2. HARD ANODIZE PER EMS-241
   TYPE 1 CLASS C (.001 TO .002 THICK)
   AS PER "AIR RESEARCH" SPEC OR EQUIV.
3. DRY FILM LUBRICATE PER EMS-242
   TYPE 1 CLASS B (.0003 TO .0005 THICK)
   AS PER "AIR RESEARCH" SPEC OR EQUIV.

(AIRESEARCH MFG CO.
402 SOUTH 36th STREET
PHOENIX 34, ARIZONA)

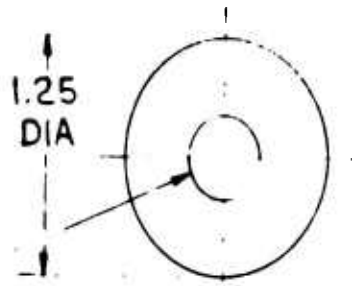


.41
.38 DIA THRU
FOR DETAIL -10

.47
.44 DIA THRU
FOR DETAIL -11

.53
.50 DIA THRU
FOR DETAIL -12

NOTES

1. MAT

2. MAY

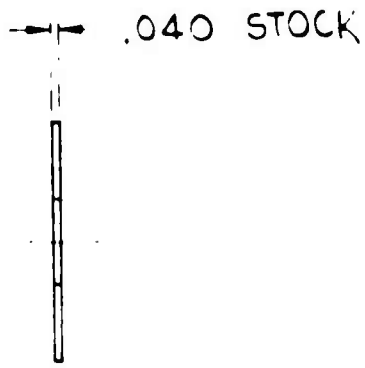


NOTES -

1. MATERIAL : STAINLESS STEEL LAMINATED SHIM
   .040 THICK (.005 INCREMENTS)

2. MAY BE PURCHASED FROM : - LAMINATED SHIM CO., INC
   81 UNION STREET,
   GLENBROOK, CONNECTICUT

# INSTALLATION PROCEDURE

(a) REMOVE EXISTING 3/16 BOLTS AND LINE-DRILL LOCK-PIN GUIDE ASSY (C115-6-101 & -102) USING 1/4 DRILL.

(b) LOCATE -1 AS PER DWG AND DRILL THRU -1 AT LOCATIONS PER NOTE 1 USING 1/4 DRILL

(c) MATCH DRILL -2 AS PER -1

(d) MOUNT -1 & -2 AS SHOWN AND DRILL 3/16 HOLES THRU -1, TUBING & -2 AT ENDS.

(e) INSERT #10 WASHERS AND TIGHTEN BOLTS

(f) CAUTION — DO NOT CRUSH TUBING

LOCK-PIN G
C115-6-102
C115-6-101
(REF)

2. ZINC CHROMATE -1 & -2 AFTER FABRICATING.

1. REMOVE BURRS & BREAK ALL EXTERNAL SHARP EDG ON -1 & -2 ON ONE SIDE ONLY.

NOTES:

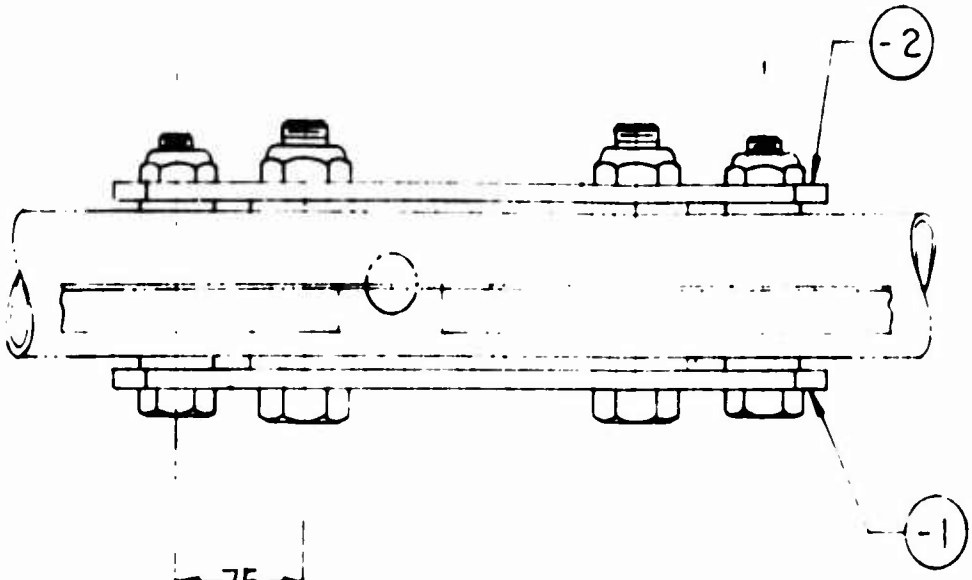


.090 ST

-

.8

-

.75

C115-6-42 (SHEAR PAN
(REF)

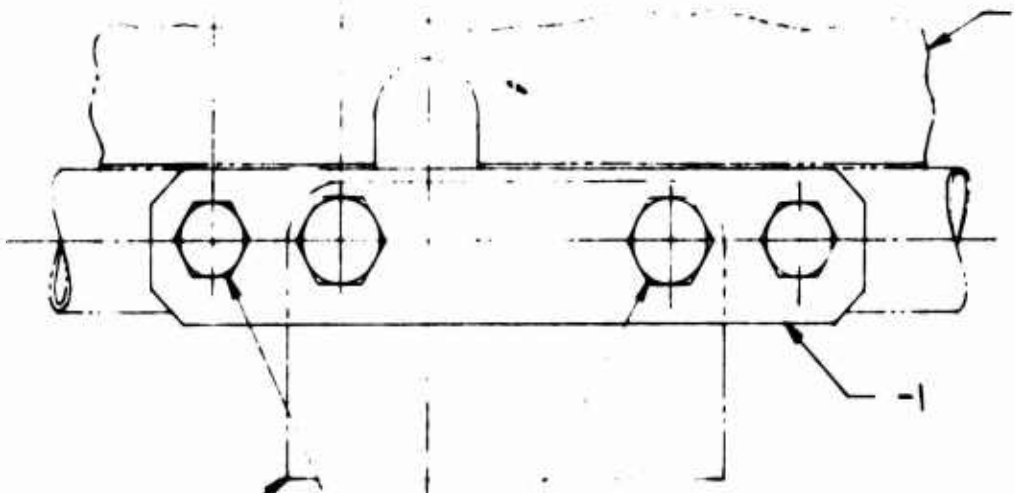


K-PIN GUIDE
5-6-102 (RH) SHOWN
5-6-101 (LH) OPPOSITE
(REF)

1/4 DRILL (.250) THRU -1, TUBING & -2
(SEE
AN4DD13A BOLT
NAS1022D4 NUT
(2 PLACES)

3/16 DRILL (.187) THRU -1, TUBING & -2
(SEE
AN3DD12A BOLT
AN960D10 WASHER (2 REQD)
NAS 1022D3 NUT
(2 PLACES)

G.

ARP EDGES

2

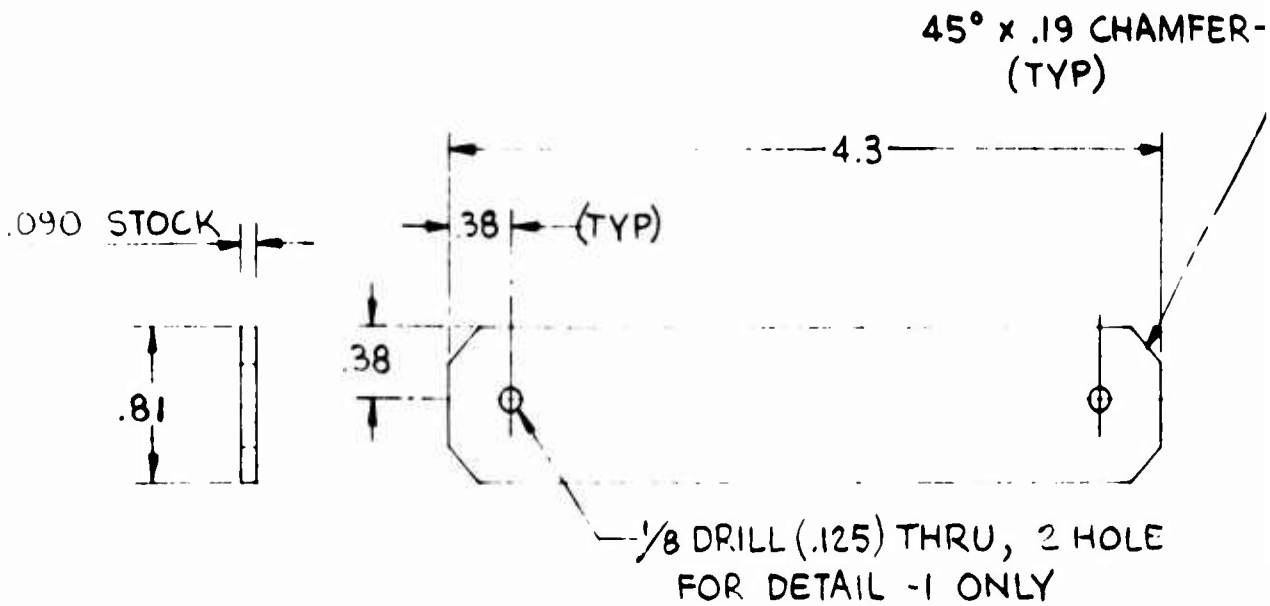


DETAIL -1 (SHOWN)

DETAIL -2 SAME AS -1 EXCEPT 1/8 HOLES OMITTED

5-6-42 (SHEAR PANEL)
(REF)

NG ¢ -2

¢ -2

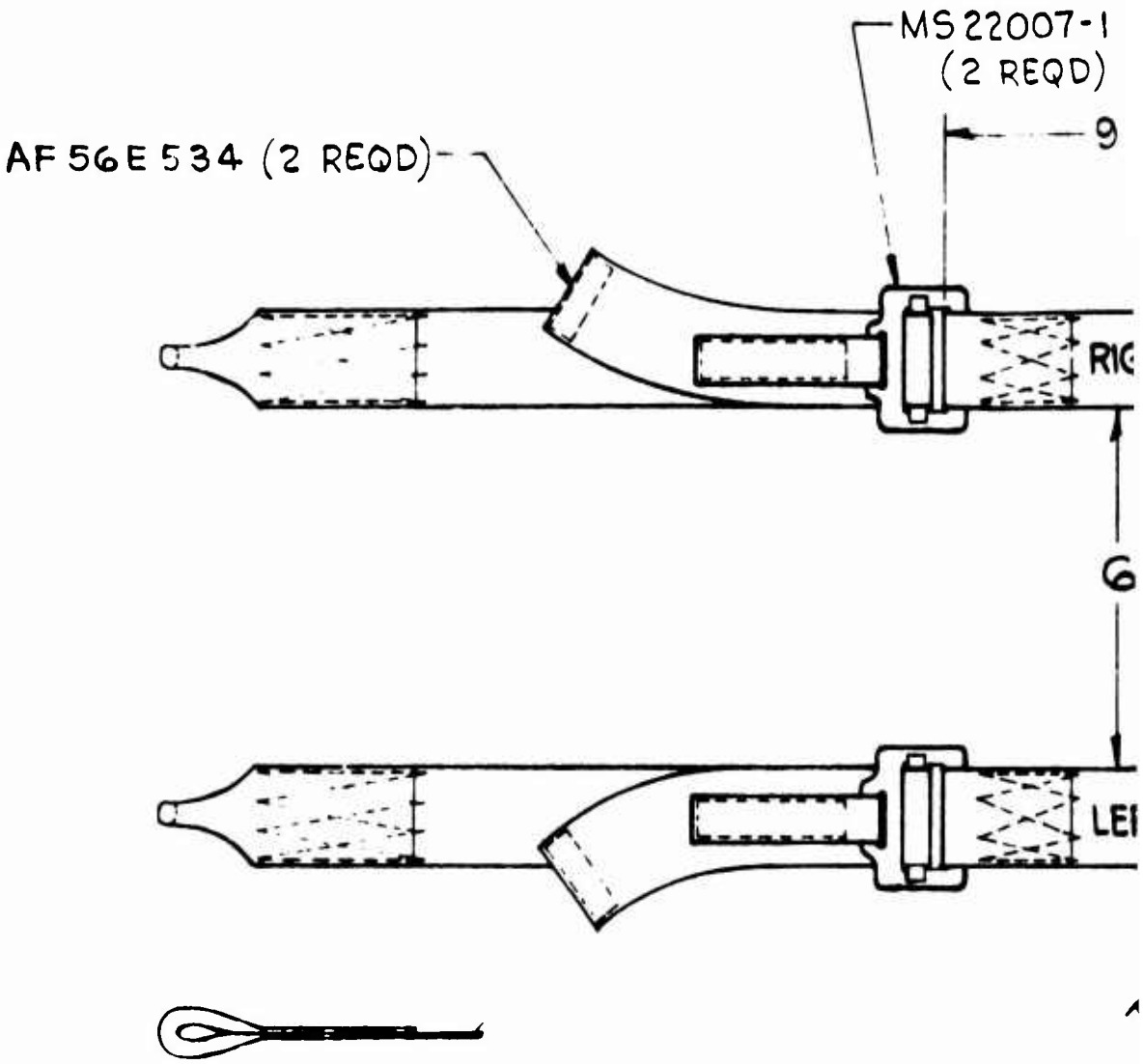


2. DACRON WEBBING TYPE II PER SPEC MIL-W-25361
COLOR- SEA GREEN #1001.

1. STRENGTH REQUIREMENTS SHALL BE IN ACCORD
WITH SPEC. MIL-H-5364 U.S. AIR FORCE FOR TYP

NOTE:

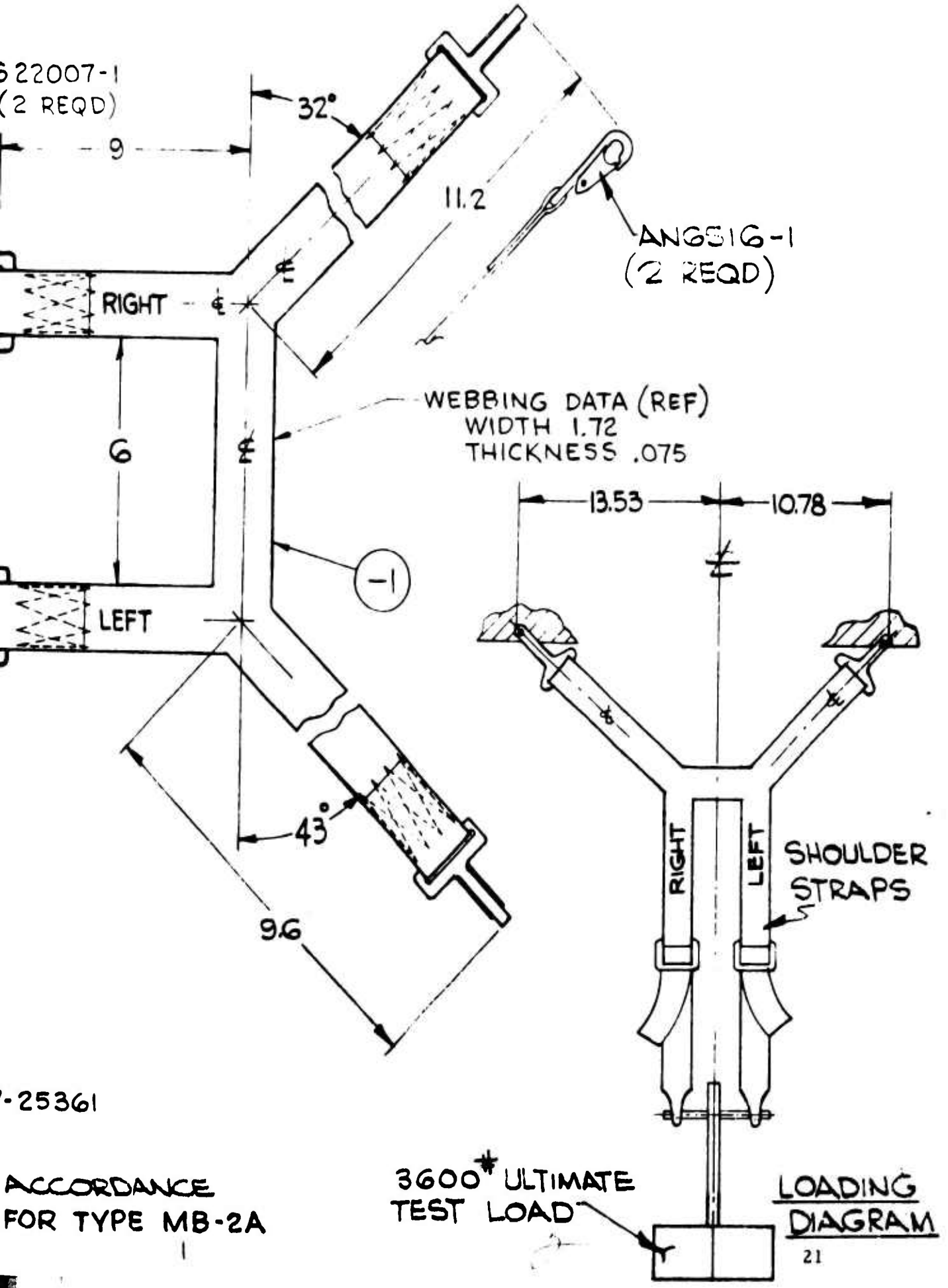


-25361

ACCORDANCE
FOR TYPE MB-2A

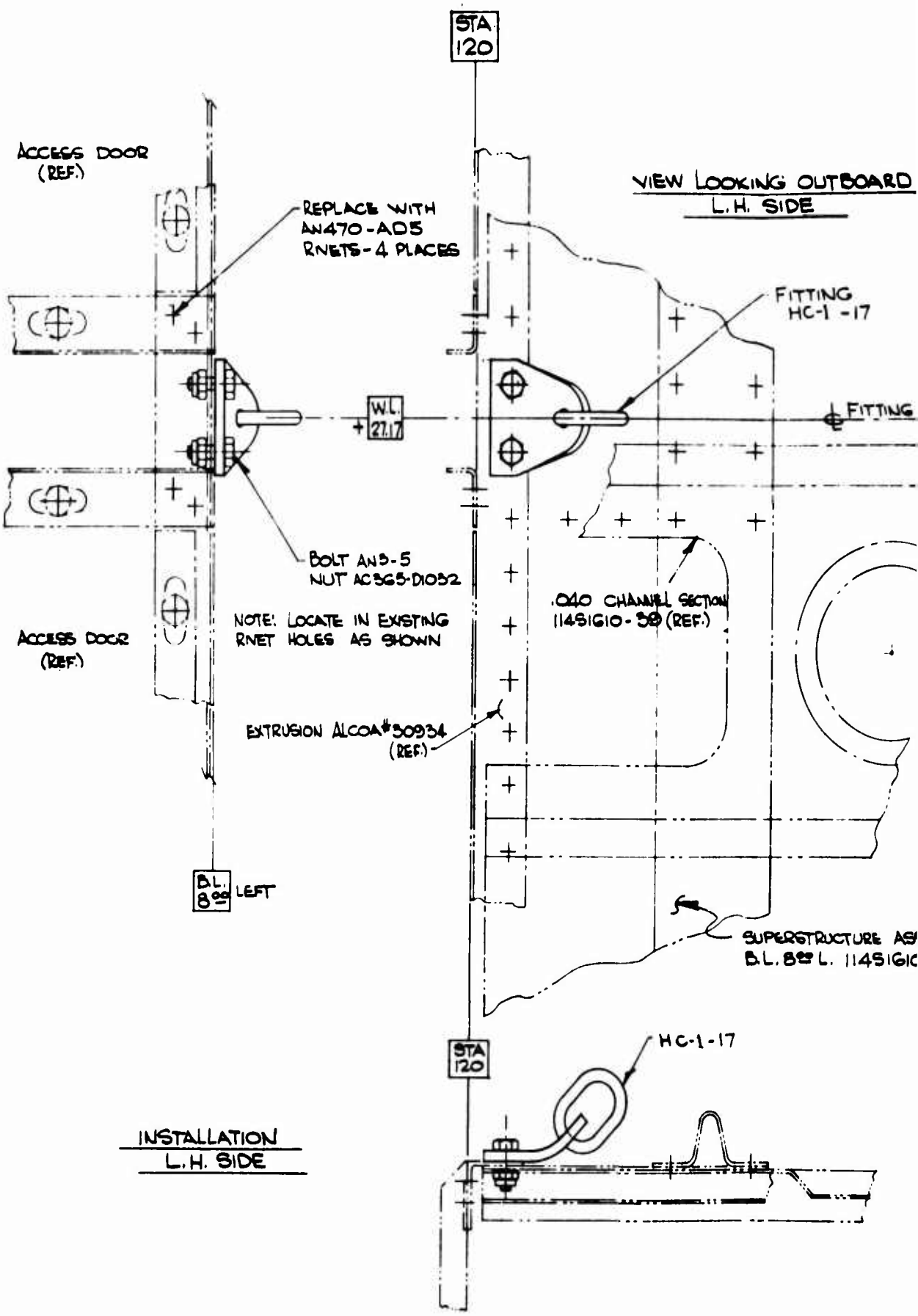
STA 120
ACCESS DOOR (REF.)
VIEW LOOKING OUTBOARD
L.H. SIDE
REPLACE WITH AN470-AD5 RIVETS-4 PLACES
FITTING HC-1-17
W.L. 27.17
FITTING
BOLT AN3-5
NUT AC365-D1032
.040 CHANNEL SECTION 114S1G10-30 (REF.)
NOTE: LOCATE IN EXISTING RIVET HOLES AS SHOWN
ACCESS DOOR (REF.)
EXTRUSION ALCOA#30934 (REF.)
B.L. 8.00 LEFT
SUPERSTRUCTURE AS
B.L. 8.00 L. 114S1G1C
STA 120
HC-1-17
INSTALLATION
L.H. SIDE

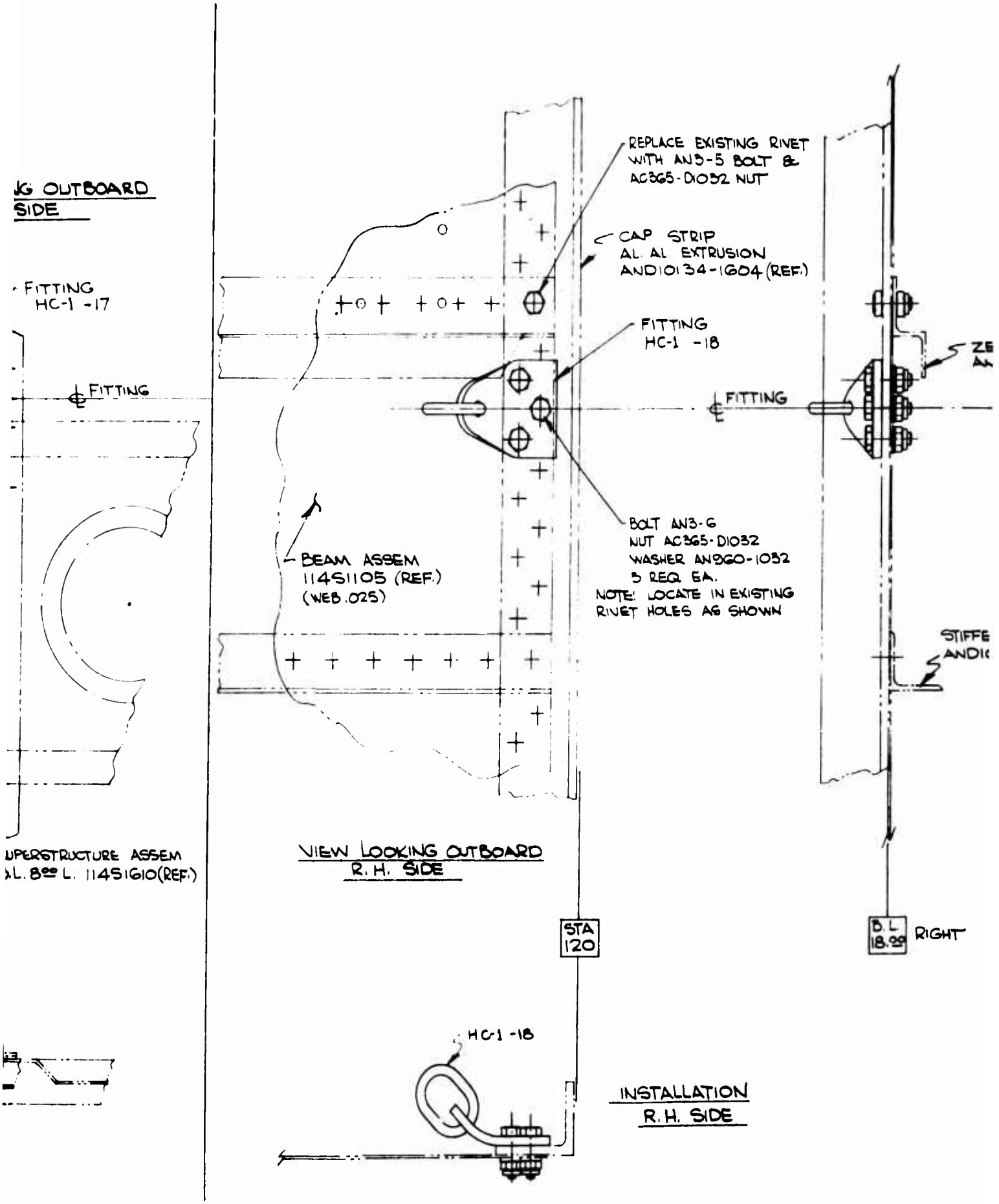

NG OUTBOARD
SIDE
FITTING
HC-1 -17
FITTING
UPERSTRUCTURE ASSEM
L. 8.00 L. 114S1610(REF.)
REPLACE EXISTING RIVET
WITH AN3-5 BOLT &
AC365-D1032 NUT
CAP STRIP
AL. AL EXTRUSION
AND10134-1604 (REF.)
FITTING
HC-1 -18
FITTING
BOLT AN3-6
NUT AC365-D1032
WASHER AN960-1032
3 REQ EA.
NOTE: LOCATE IN EXISTING
RIVET HOLES AS SHOWN
BEAM ASSEM
114S1105 (REF.)
(WEB .025)
VIEW LOOKING OUTBOARD
R.H. SIDE
STA
120
B.L.
18.00
RIGHT
HC-1 -18
INSTALLATION
R.H. SIDE

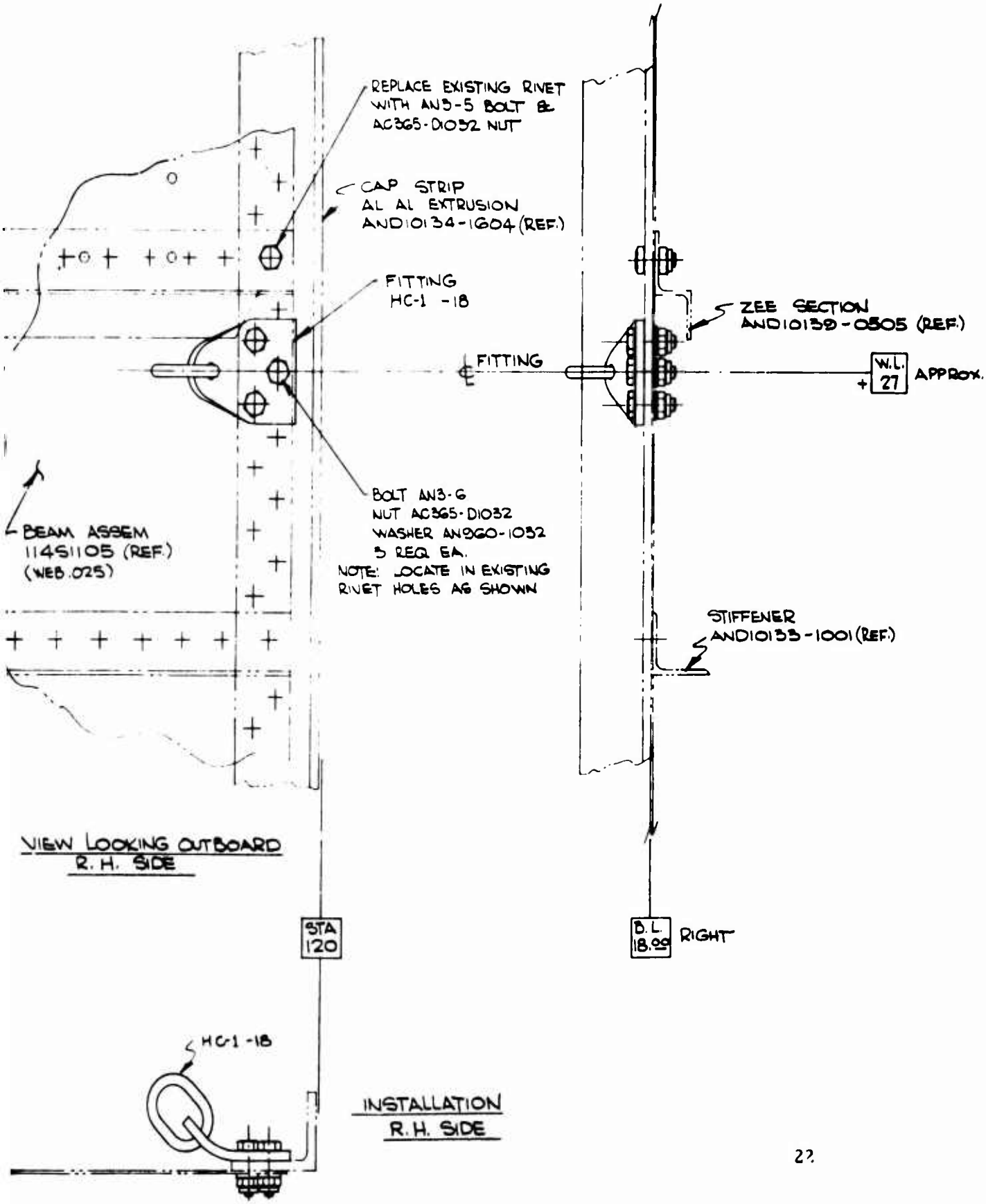
REPLACE EXISTING RIVET WITH AN3-5 BOLT & AC365-D1032 NUT
CAP STRIP AL AL EXTRUSION AND10134-1604 (REF.)
FITTING HC-1 -18
FITTING
ZEE SECTION AND10139-0505 (REF.)
W.L. 27
APPROX.
BOLT AN3-6
NUT AC365-D1032
WASHER AN960-1032
3 REQ. EA.
NOTE: LOCATE IN EXISTING RIVET HOLES AS SHOWN
BEAM ASSEM 1145L105 (REF.) (WEB .025)
STIFFENER AND10133-1001 (REF.)
VIEW LOOKING OUTBOARD R. H. SIDE
STA 120
B.L. 18.00
RIGHT
HC-1 -18
INSTALLATION R. H. SIDE

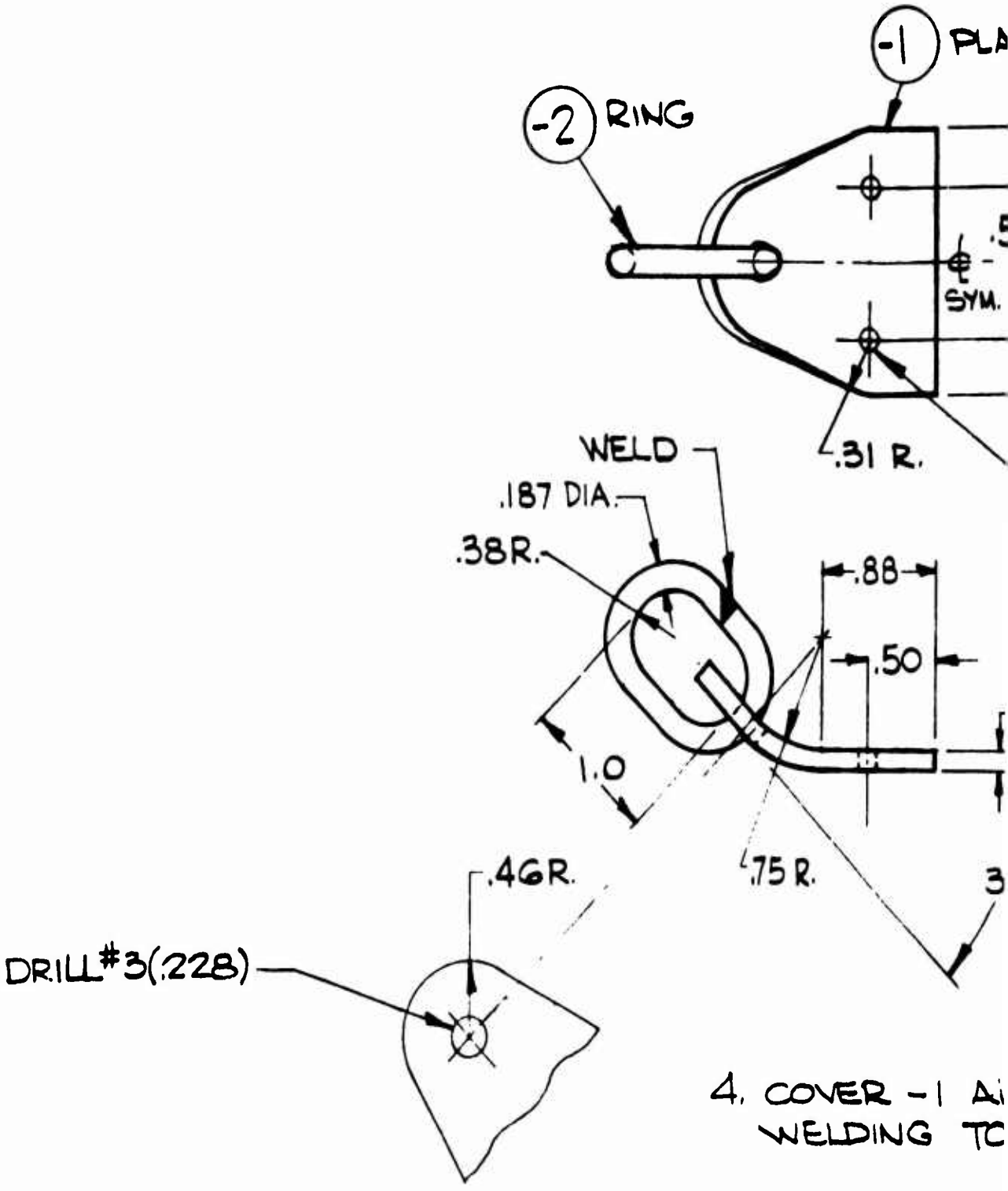


4. COVER -1 A
WELDING TO

3. MAGNETIC

2. WORKMANSH
ACCORDANCE

1. BREAK ALL S
NOTE;

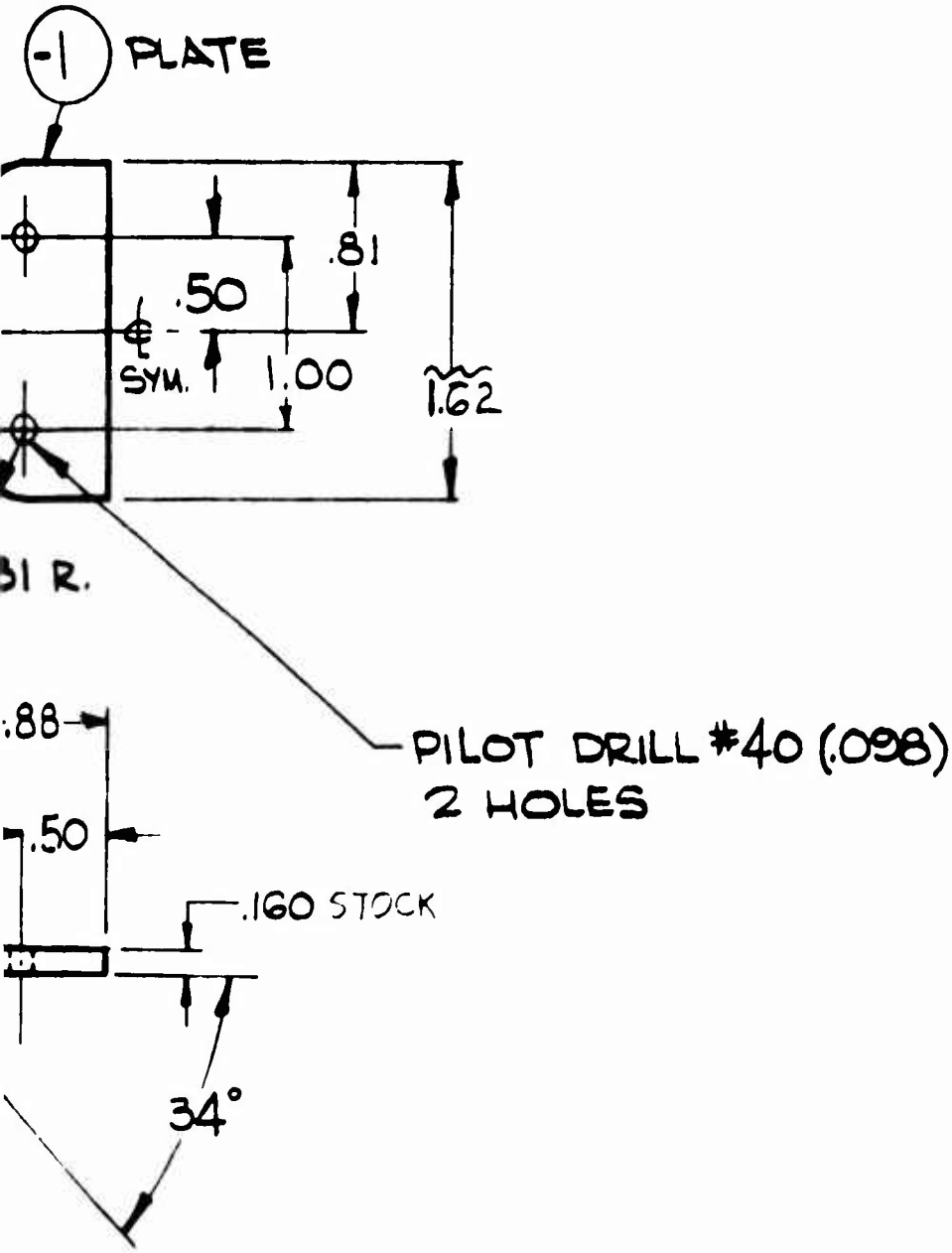


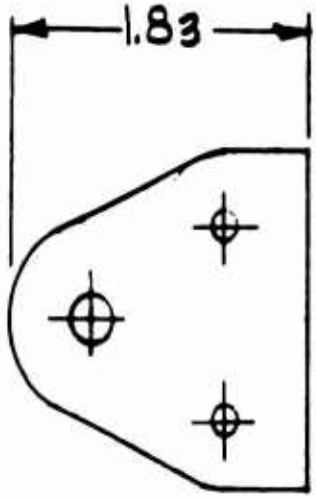


FLAT PATTERN DEV
OF -1 PLATE

:R -1 ALUM. PLATE WITH ASBESTOS WHEN
DING TO PREVENT OVERHEATING

NETIC INSPECTION SPEC. MIL-I-6868

CMANSHIP OF WELDING SHALL BE IN
RDANCE WITH SPEC. MIL-T-5021 CLASS A

K ALL SHARP EDGES .02 R.

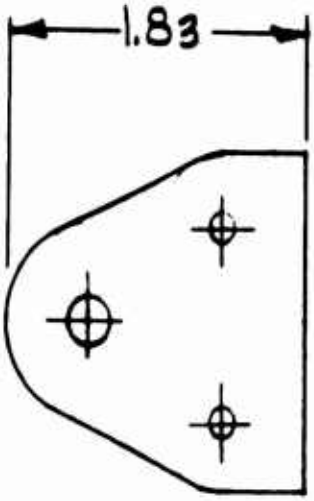


FLAT PATTERN DEVELOPMENT
OF -1 PLATE

PILOT DRILL #40 (.098)
2 HOLES

.K

TE WITH ASBESTOS WHEN
IT OVERHEATING

ON SPEC. MIL-1-6868

IELDING SHALL BE IN
SPEC. MIL-T-5021 CLASS A

DGES .02 R.

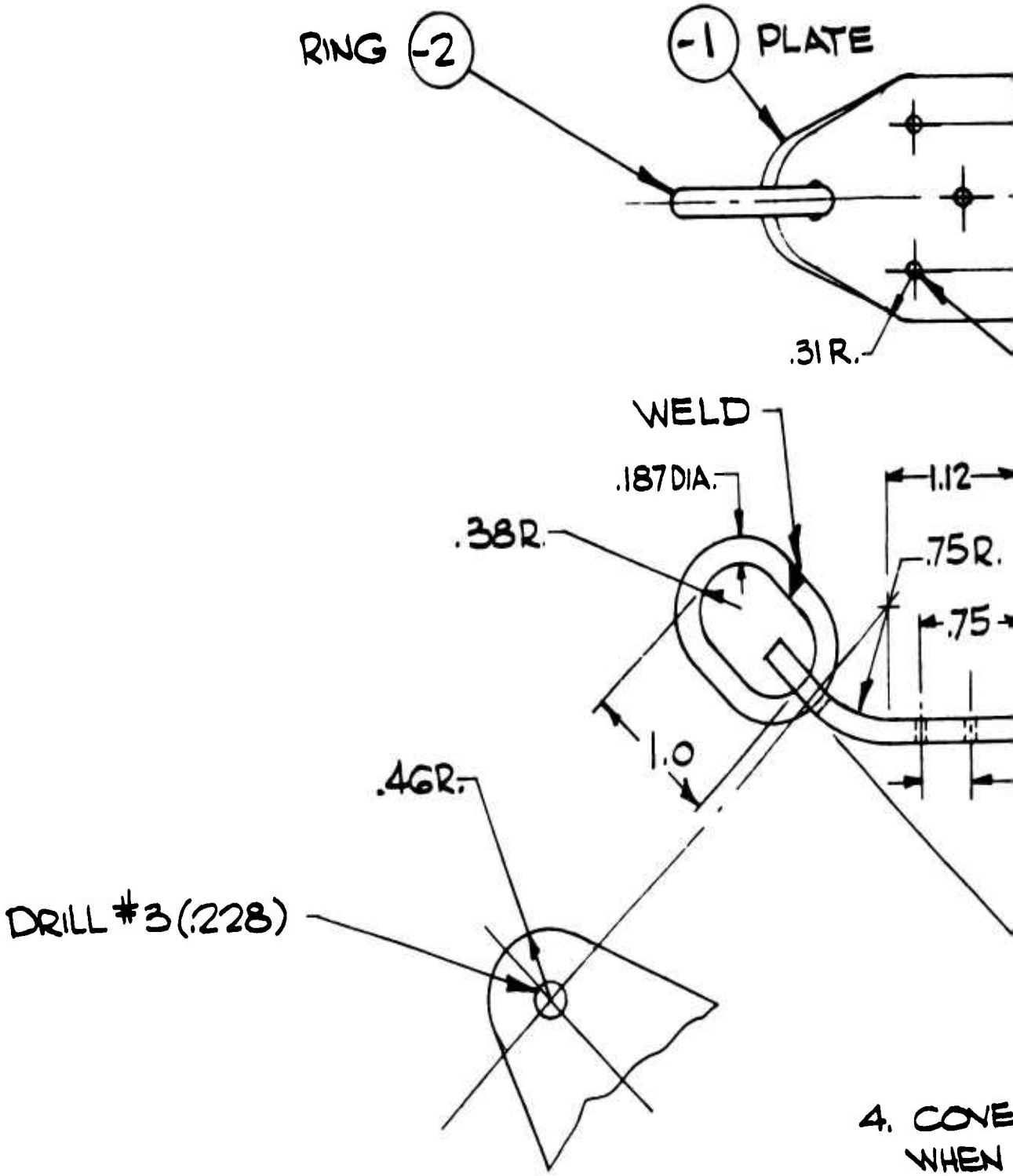


4. COVE
WHEN

3. MAGN

2. WORK
ACCOR

1. BREA

NOTE:

LATE

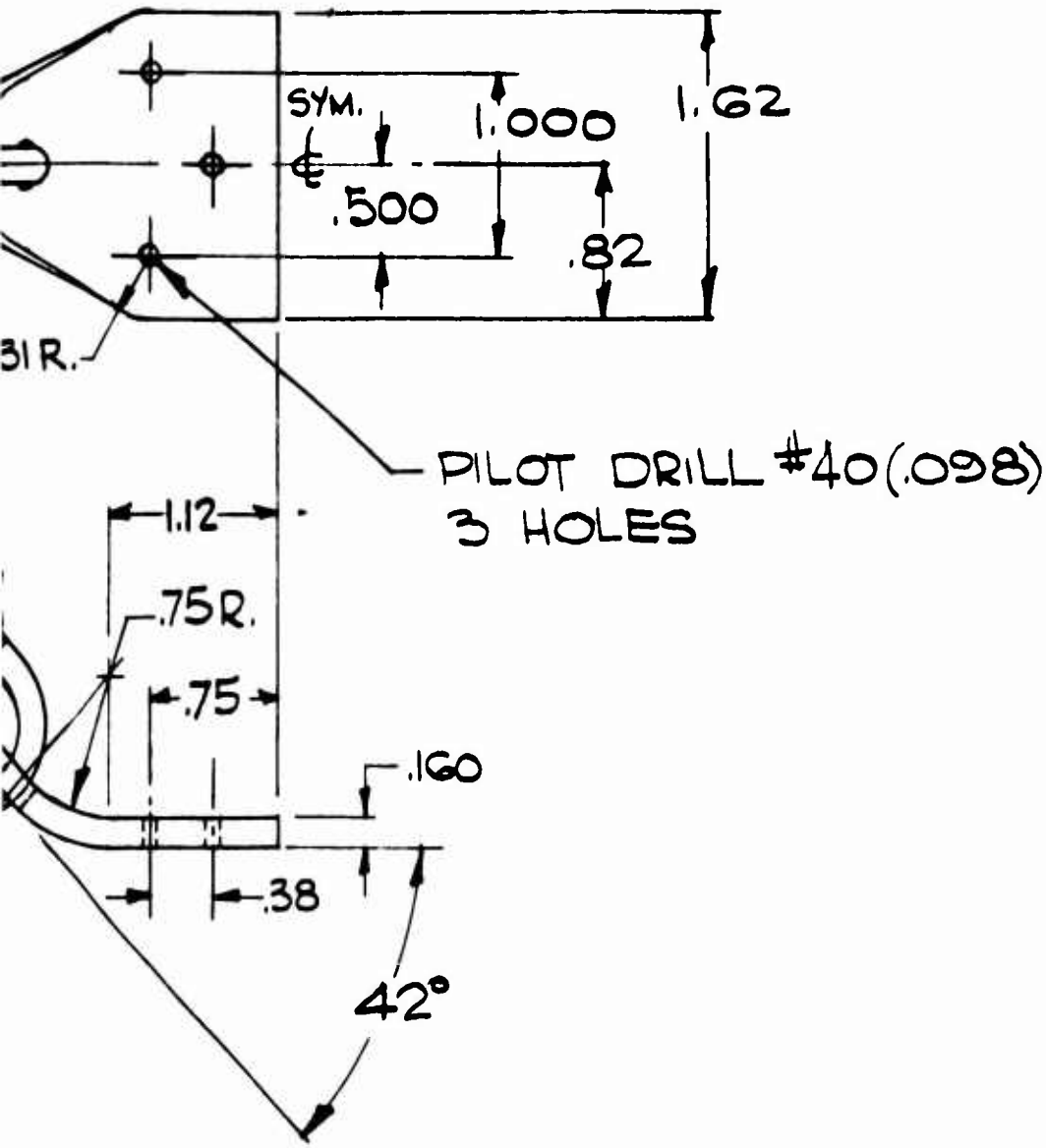


FLA

4. COVER -1 ALUM. PLATE WITH ASBESTOS WHEN WELDING TO PREVENT OVERHEATING

3. MAGNETIC INSPECTION MIL-I-6868

2. WORKMANSHIP OF WELDING SHALL BE IN ACCORDANCE WITH SPEC. MIL-T-5021 CLASS A.

1. BREAK ALL SHARP EDGES .02 R.

NOTE:

1

2

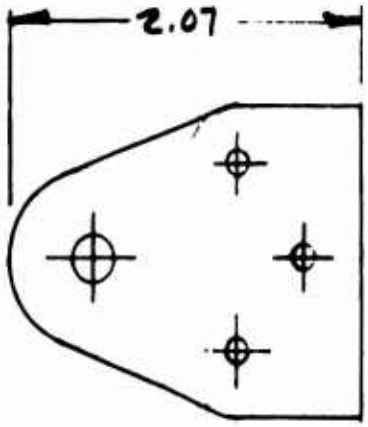


FLAT PATTERN DEVELOPMENT
OF -1 PLATE

40(.098)

TH ASBESTOS
OVERHEATING

1-6868

G SHALL BE IN
T-5021 CLASS A.
.02 R.



3

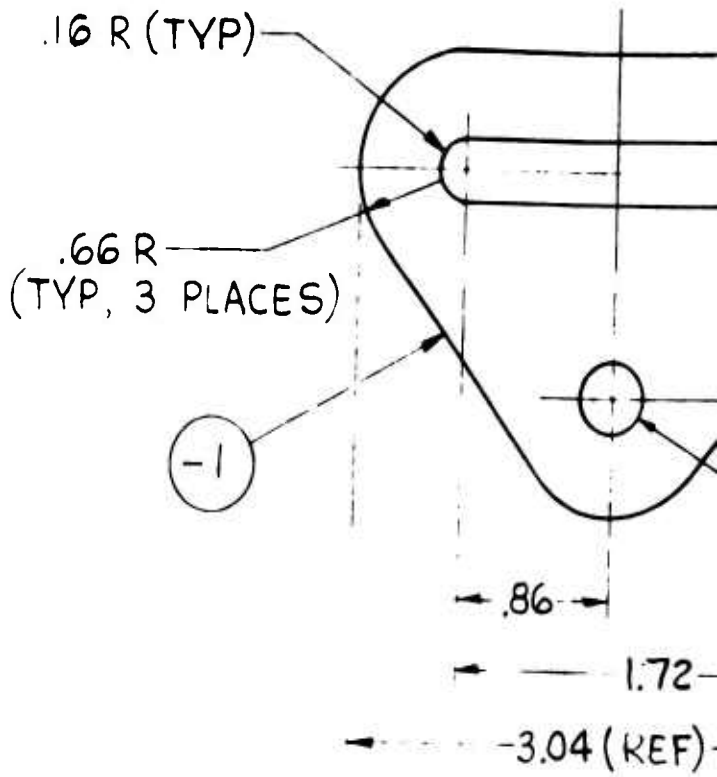


NOTES:

1. BREAK ALL SHARP EDGES, .04 MIN. AROUND SLOT.

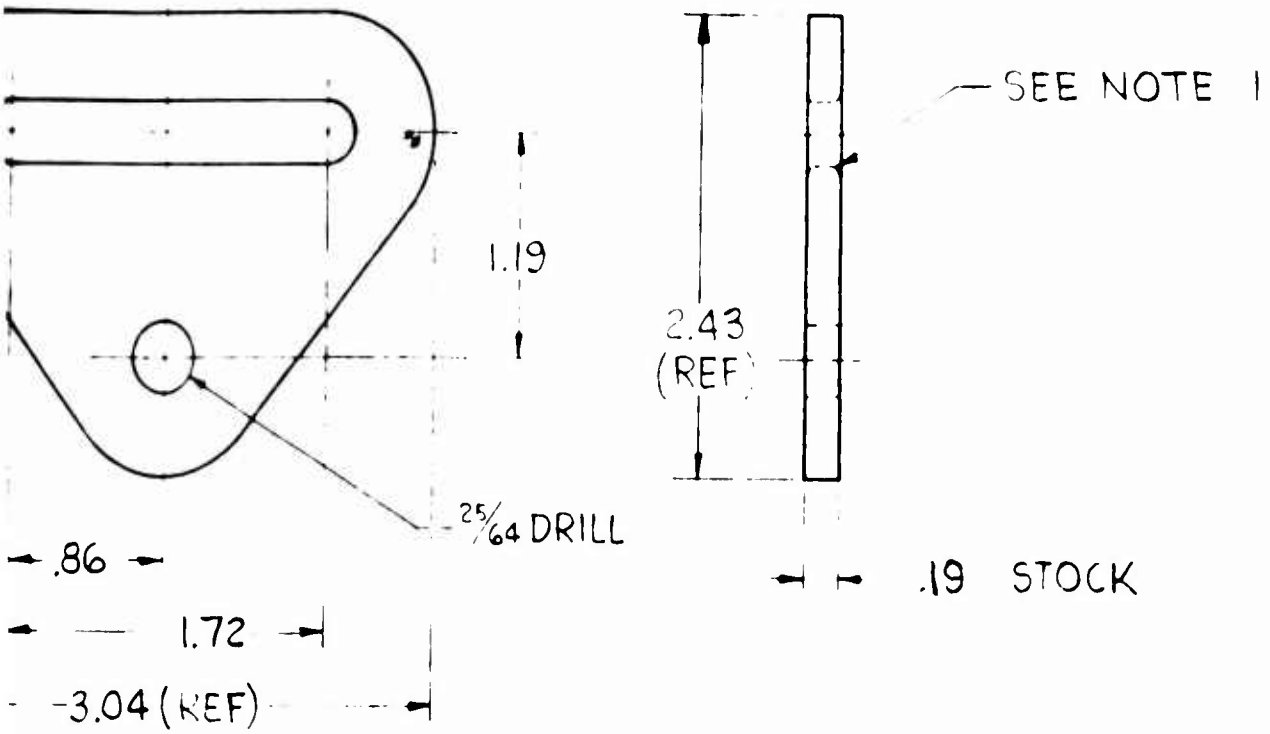


S,

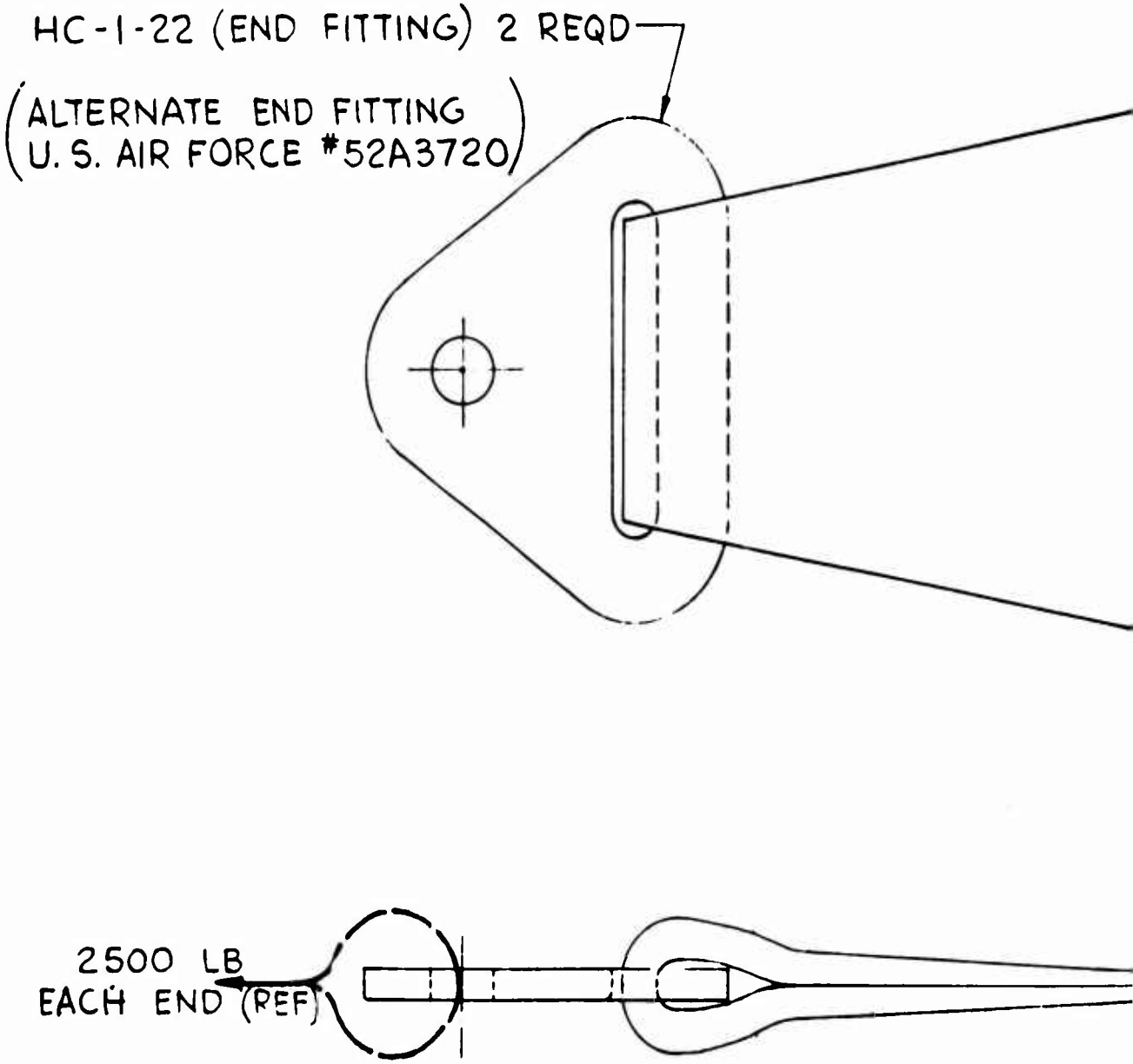


THIS BELT SAME AS U. S. AIR FORCE DW
REPLACES AN6516-1 (2 PLACES)

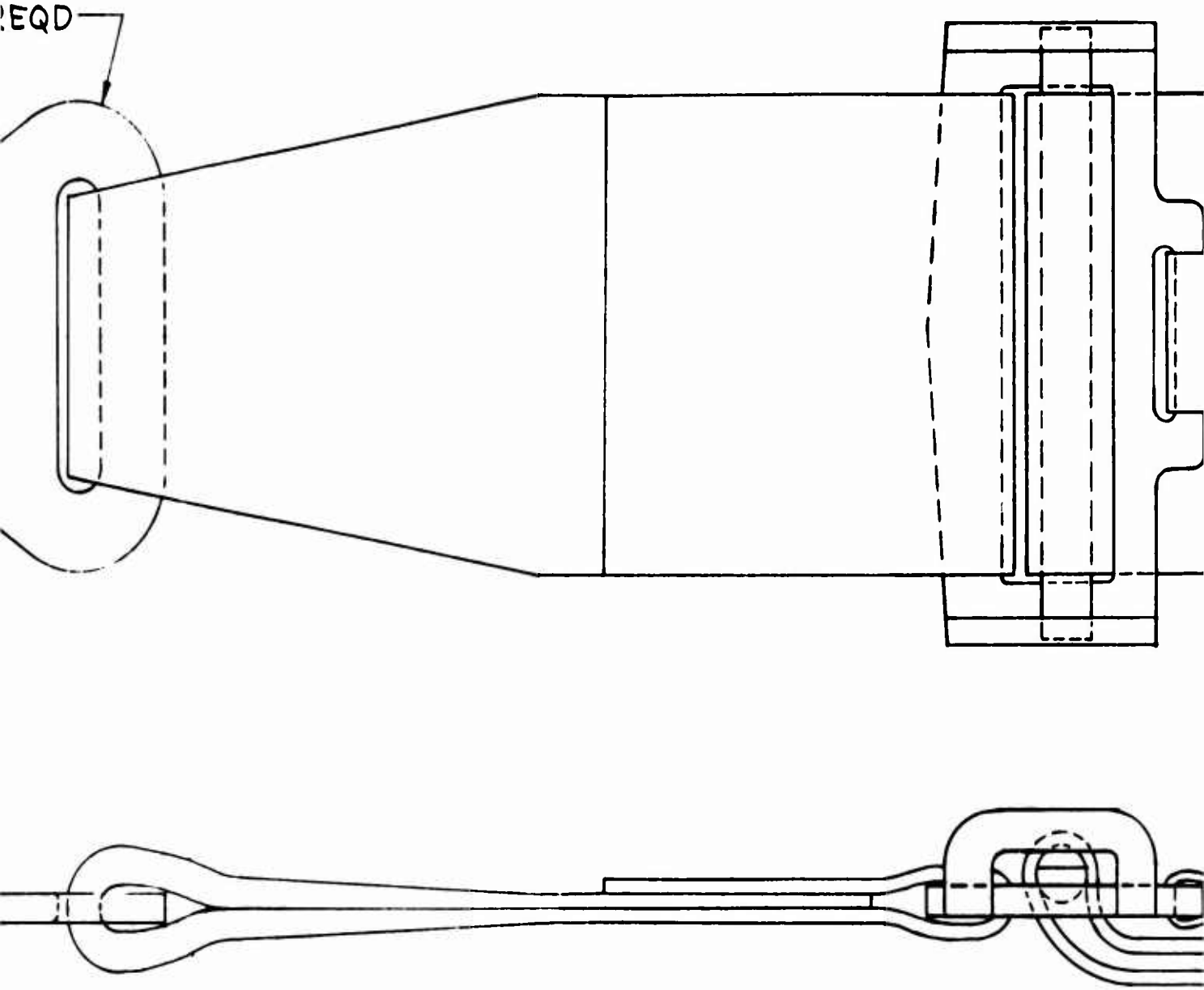


AS U. S. AIR FORCE DWG NO. 49F6550 EXCEPT
16-1 (2 PLACES)

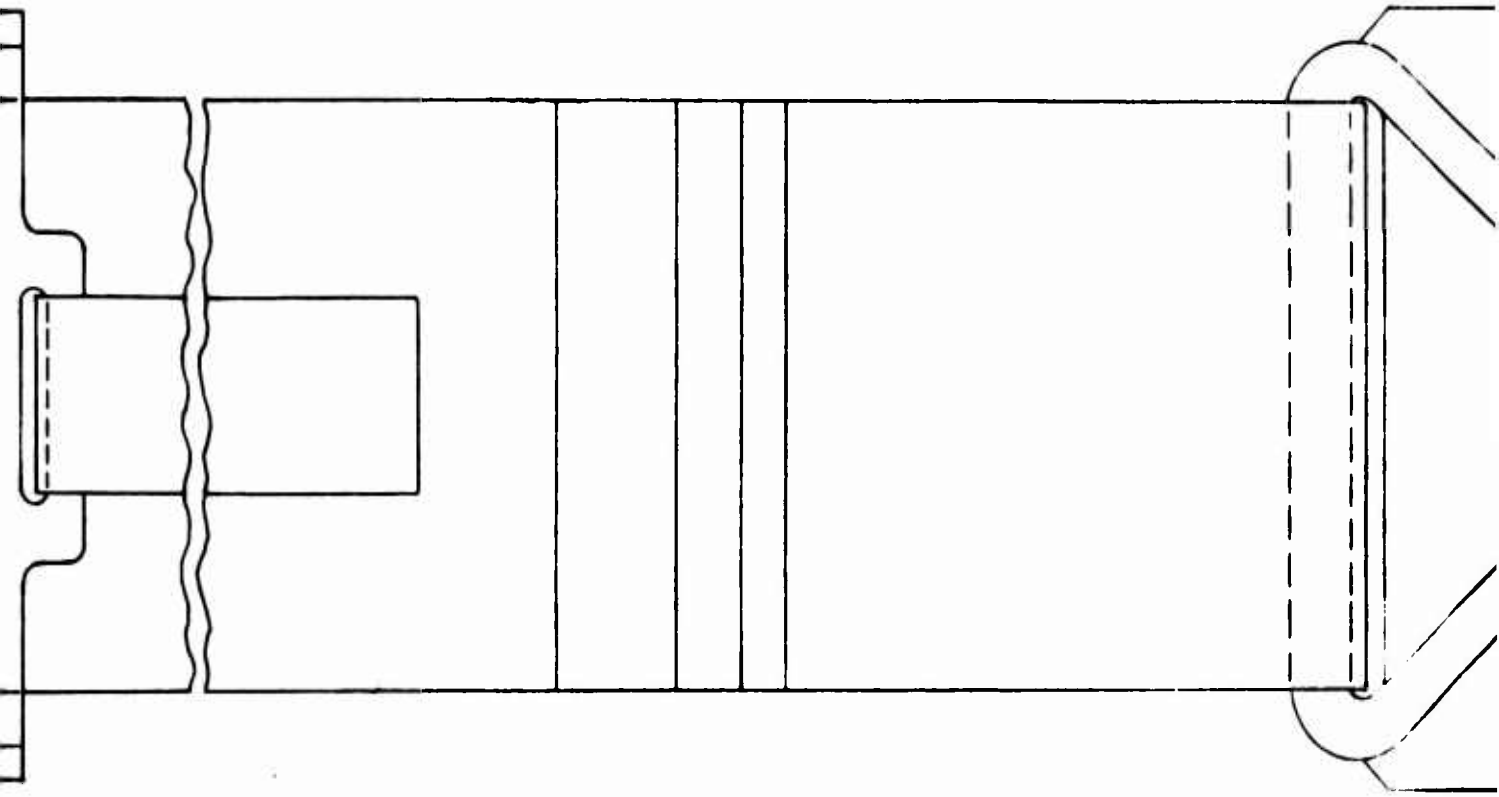

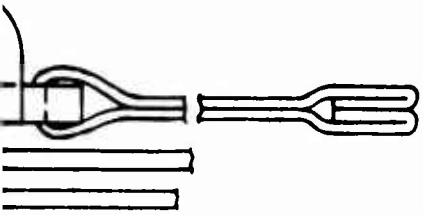

T END FITTING HC-1-22

3

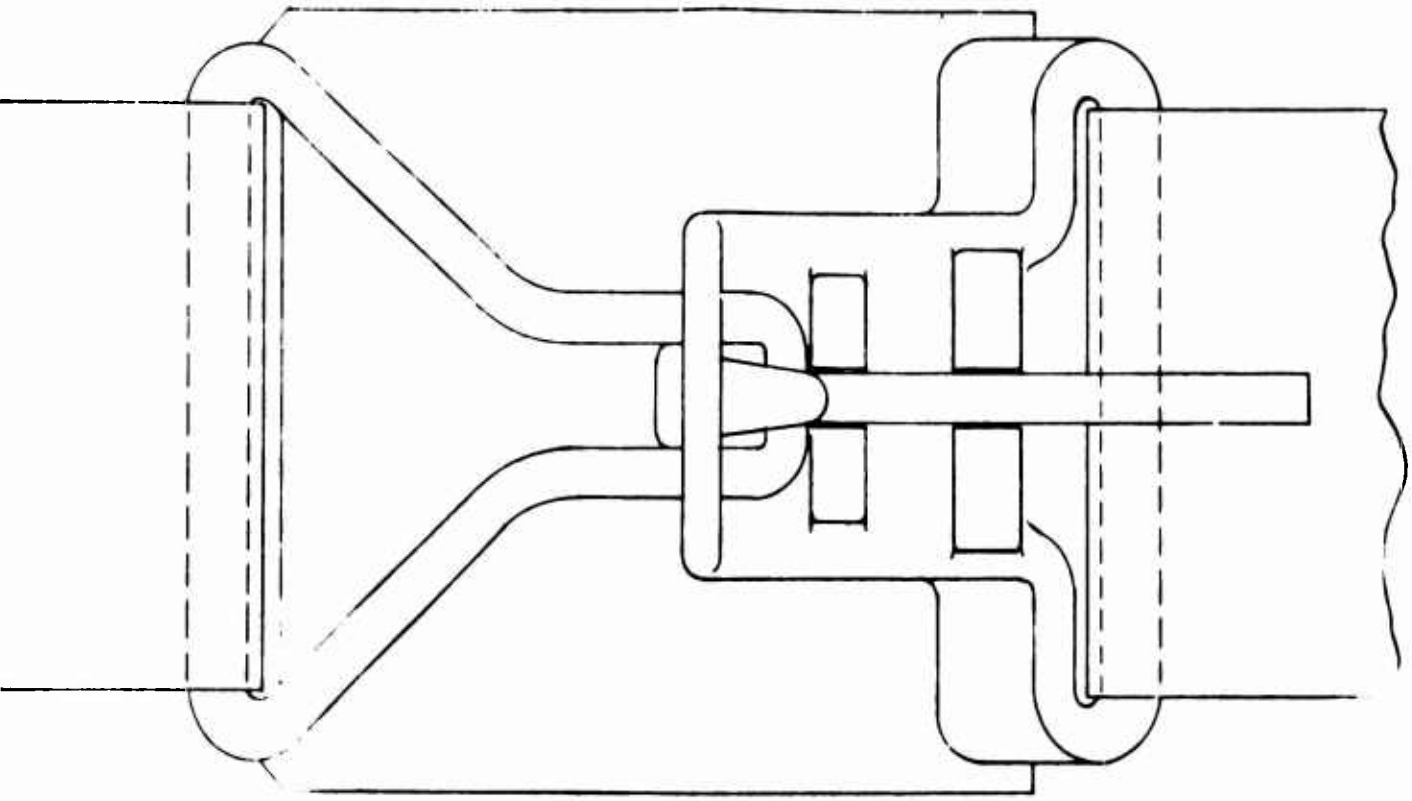



1 4

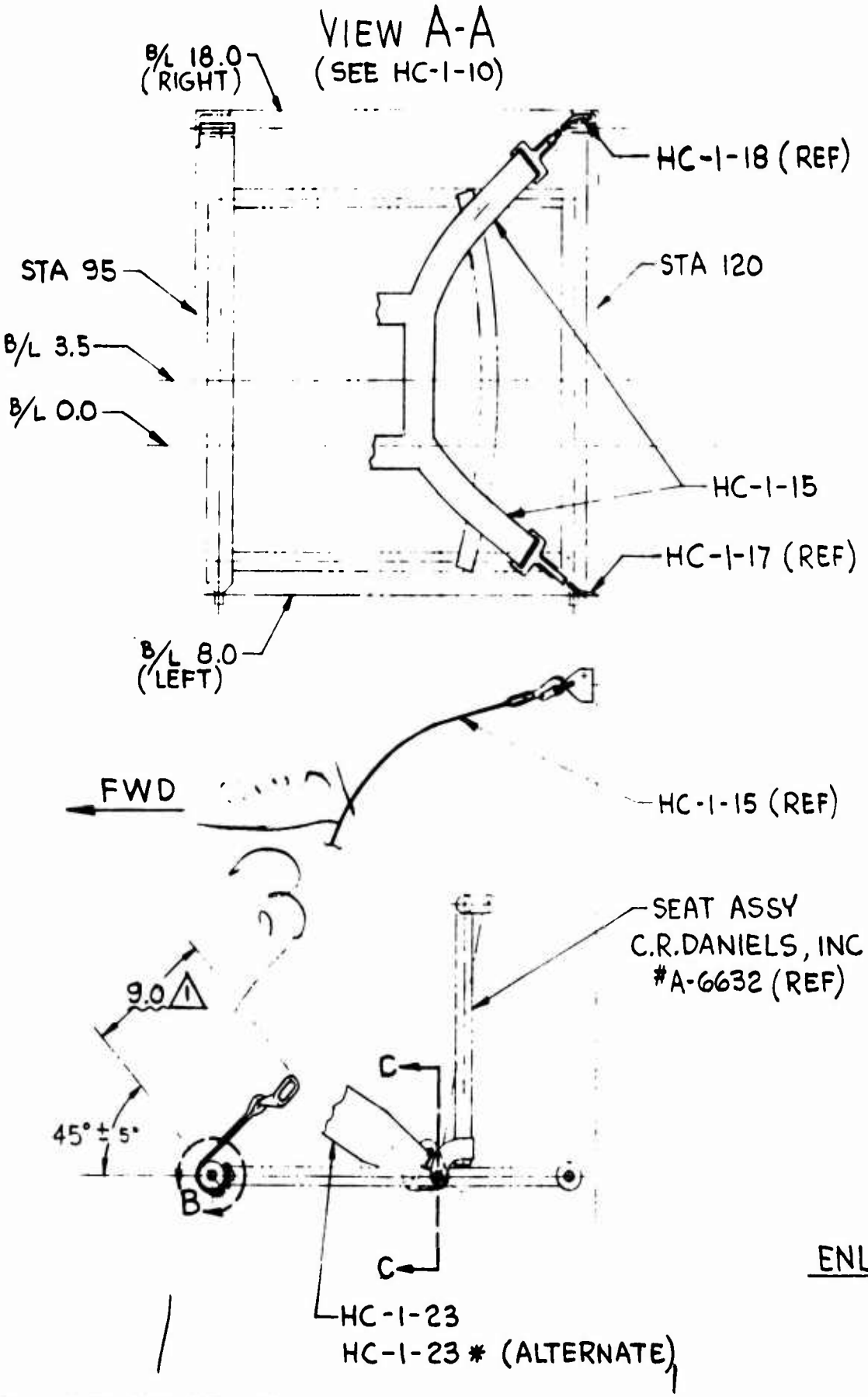
VIEW A-A
(SEE HC-1-10)
B/L 18.0
(RIGHT)
HC-1-18 (REF)
STA 95
STA 120
B/L 3.5
B/L 0.0
HC-1-15
HC-1-17 (REF)
B/L 8.0
(LEFT)
FWD
HC-1-15 (REF)
SEAT ASSY
C.R.DANIELS, INC
#A-6632 (REF)
9.0
C
45° ± 5°
B
C
HC-1-23
HC-1-23 * (ALTERNATE)

ENLARG

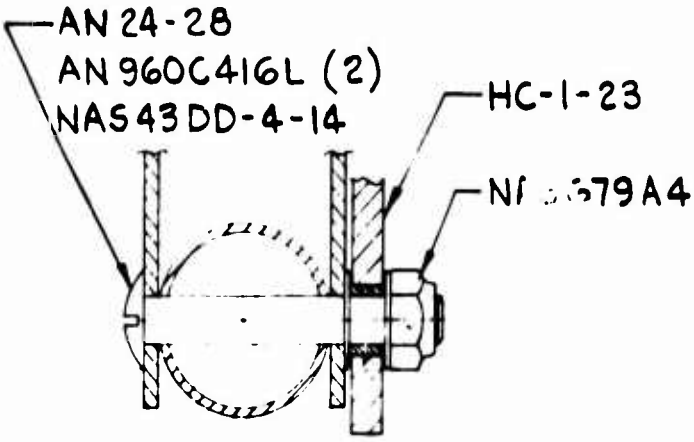


ENLARGED PARTIAL SECT C-C
PREFERRED INSTALLATION
SCALE ~ 1/1
(TYP, 2 PLACES)
LEFT HAND SHOWN, RT HAND OPPOSITE

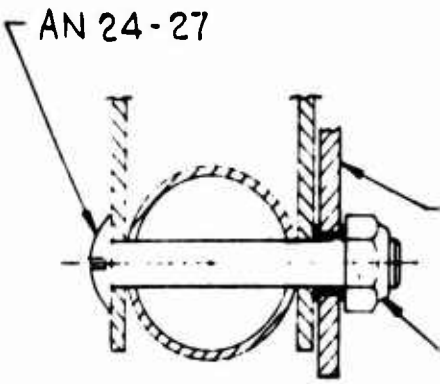


ENLARGED PARTIAL SECT
(ALTERNATE INSTALLATIO
SCALE ~ 1/1
(TYP, 2 PLACES)

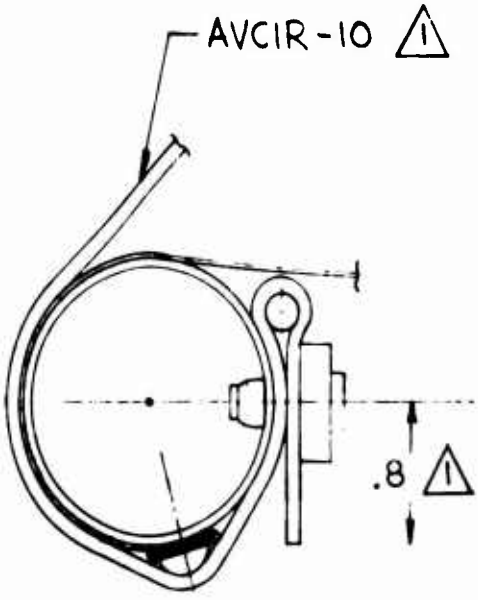


ILARGED DETAIL B

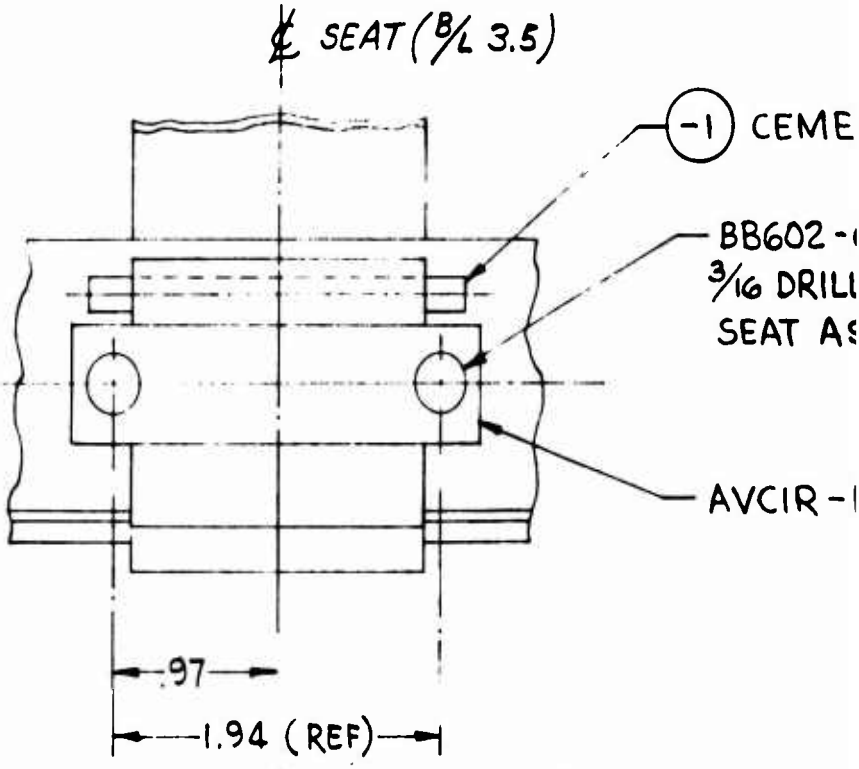

NOTES:

1. "L" LENGTH AS PER AVCIR-10 DWG, TO BE 13.0 INCHES (TRIM

2. MAY BE PURCHASED FROM :- "HI-SHEAR" CORP, 2600 WEST 247

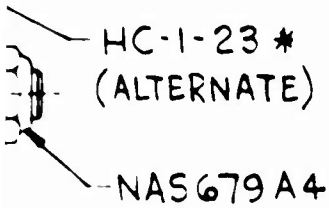


CT C-C

ATION) -

)

EMENT TO STRAP

602-6-10 2 (OR EQUIV.)

DRILL THRU ONE SIDE OF

AT ASSY ( 2 PLACES)

CIR-15

PER AVCIR-10 DWG, TO BE 13.0 INCHES (TRIM TO SUIT ℄ SEAR).

SED FROM :- "HI-SHEAR" CORP, 2600 WEST 247TH STREET, TORRANCE, CALIF



4

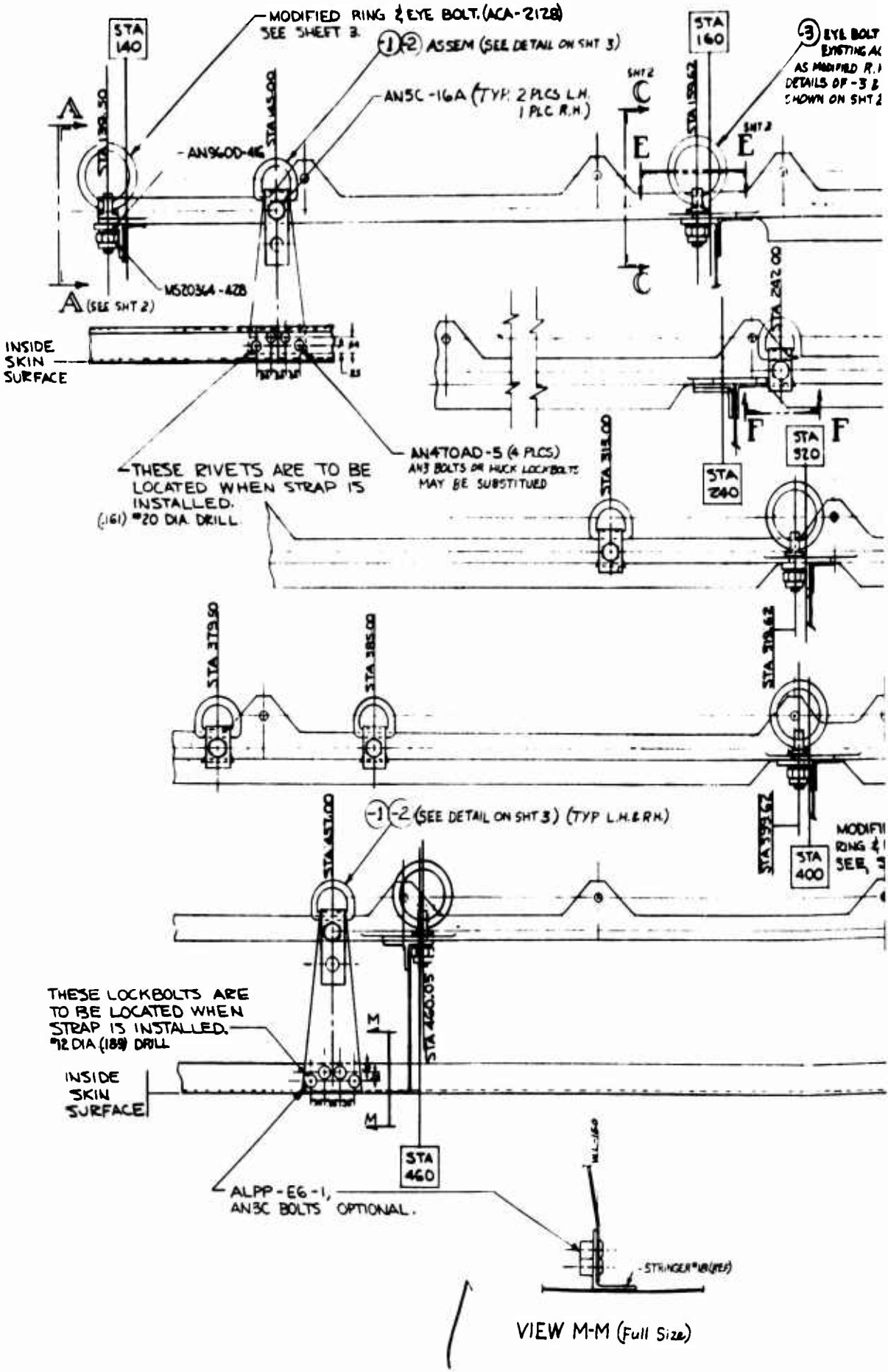

MODIFIED RING & EYE BOLT. (ACA-2128)
SEE SHEET 3.
-1 -2 ASSEM (SEE DETAIL ON SHT 3)
AN5C-16A (TYP. 2 PLCS L.H. 1 PLC R.H.)
AN960D-416
MS20364-428
A (SEE SHT 2)
STA 140
STA 160
STA 139.50
STA 145.00
STA 159.62
STA 242.00
STA 315.00
STA 320
STA 240
STA 379.50
STA 385.00
STA 319.62
STA 399.62
STA 400
STA 457.00
STA 460.05
STA 460
INSIDE SKIN SURFACE
THESE RIVETS ARE TO BE LOCATED WHEN STRAP IS INSTALLED.
(.161) #20 DIA. DRILL
AN470AD-5 (4 PLCS)
AN3 BOLTS OR HUCK LOCKBOLTS MAY BE SUBSTITUED
-1 -2 (SEE DETAIL ON SHT 3) (TYP L.H. & R.H.)
THESE LOCKBOLTS ARE TO BE LOCATED WHEN STRAP IS INSTALLED.
#12 DIA (.189) DRILL
INSIDE SKIN SURFACE
ALPP-E6-1, AN3C BOLTS OPTIONAL.
STRINGER #18 (REF)
VIEW M-M (Full Size)

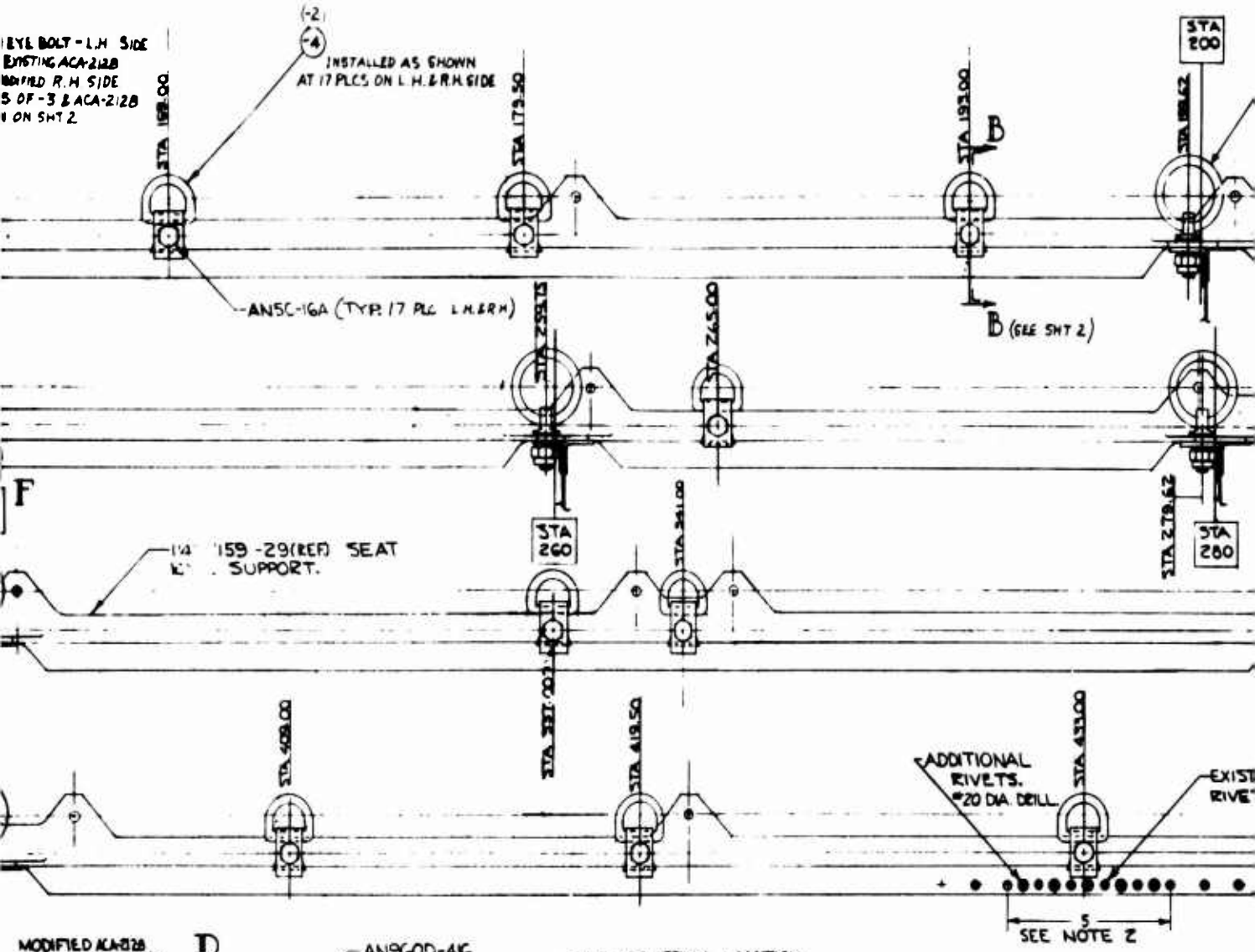


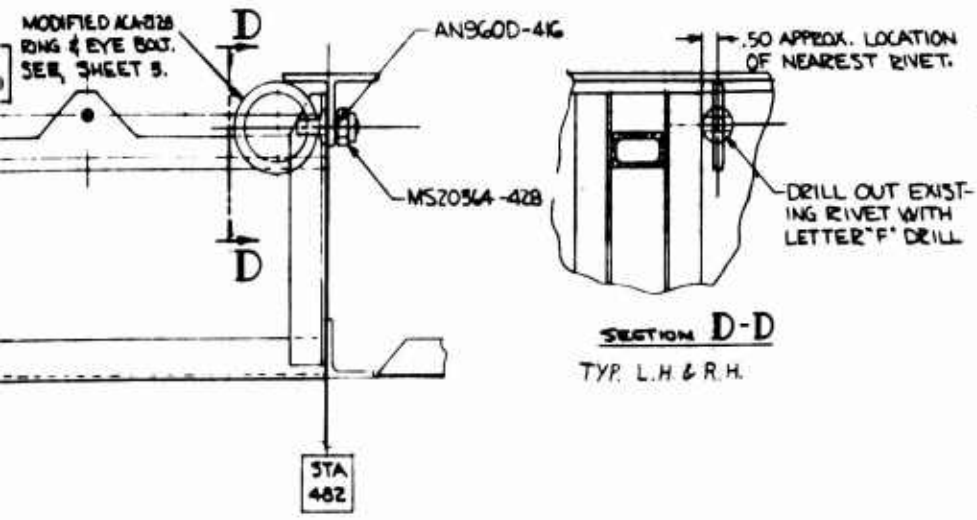


## NOTES

1. ALL SECTIONS NOT SHOWN ON THIS SHEET ARE SHOWN ON SHEET 2.
2. ADD 5-AN470AD5 RIVETS AS SHOWN. THI PATTERN IS TO BE SYMMETRIC ABOUT TIE-DOWN BOLT. TYPICAL AT STATIONS 193, 217, 221, 265, 289, 299.50, 313, 337, 341, 385, 409, 419.50 AND 433.
3. LEFT HAND SHOWN, RIGHT HAND SIDE OPPOSITE EXCEPT AS SHOWN. SEE SEC E-E SHEET 2.
4. WHERE DETAIL (3) FALLS AT FORMERS, REMO EXISTING R3001 (3/16 HUCK BOLTS) AND DRILL HOLE WITH LETTER "O" DRILL AND INSTAL BOLT. WHERE 1/4 EYE BOLT FALLS AT FORMERS EXISTING R3001 HUCK BOLTS AND DRILL OUT WITH LETTER "F" DRILL AND INSTALL EYE EXCEPT STATION 482.
5. WHERE BELT ATTACHMENT STRAPS FALL ING HOLES IN MAGNESIUM EXTRUSION, D EXISTING HOLES WITH LETTER "O" DRILL STALL STRAPS. WHEN NEW HOLES ARE NEE STRAPS, DRILL THRU WITH LETTER "O" DRIL
6. EQUIVALENT SCREW MAY BE USED.
7. WORKMANSHIP OF WELDING SHALL BE I DANCE WITH SPEC. MIL-T-5021 CLAS

2

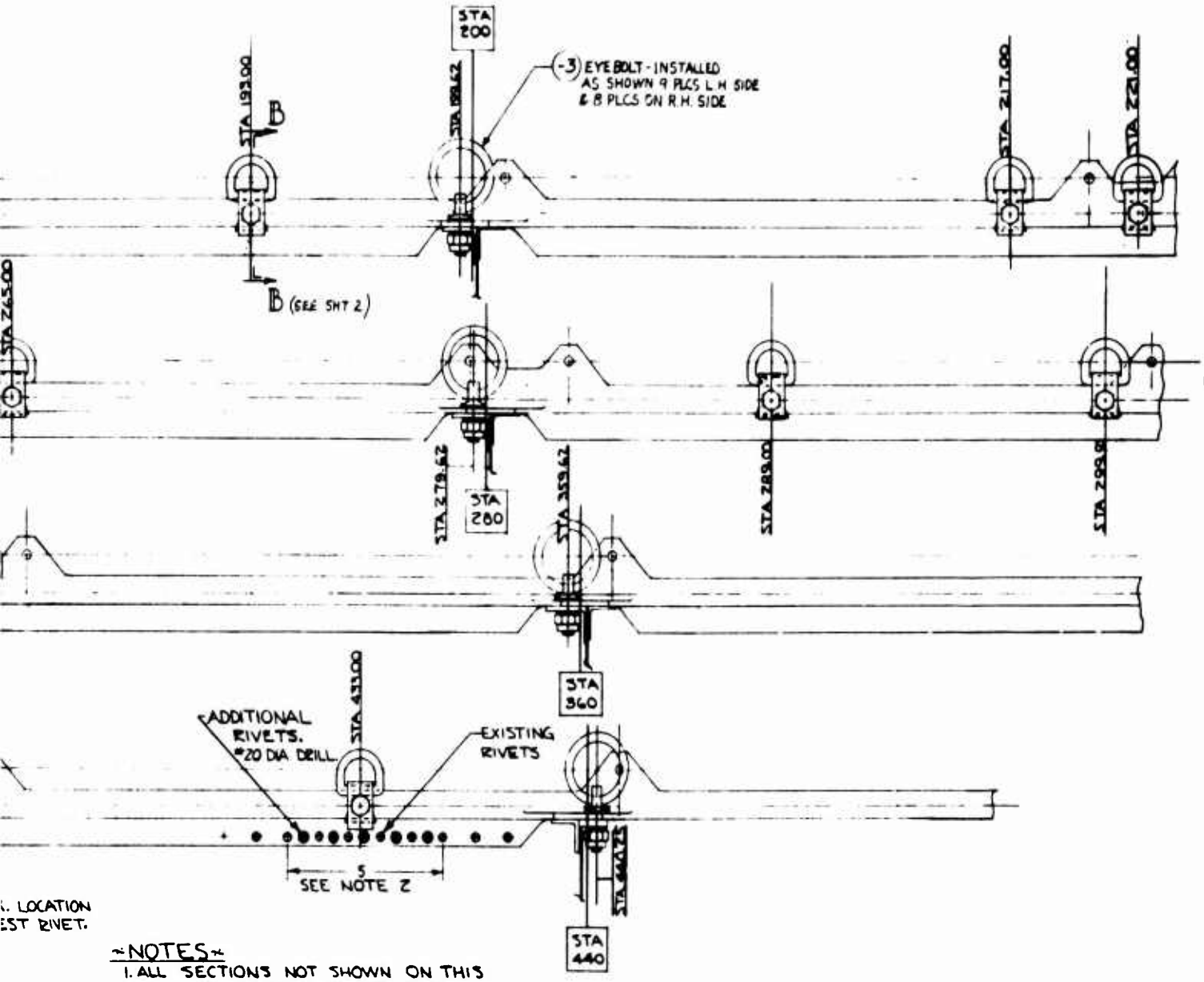


. LOCATION
EST RIVET.

. OUT EXIST-
IVET WITH
ER "F" DRILL

## ~NOTES~

1. ALL SECTIONS NOT SHOWN ON THIS SHEET ARE SHOWN ON SHEET 2.
2. ADD 5-AN470AD5 RIVETS AS SHOWN. THE PATTERN IS TO BE SYMMETRIC ABOUT THE 5/16 TIE-DOWN BOLT. TYPICAL AT STATIONS 169, 179.50, 193, 217, 221, 265, 289, 299.50, 313, 337, 341, 379.50, 385, 409, 419.50 AND 433.
3. LEFT HAND SHOWN, RIGHT HAND SIDE OPPOSITE EXCEPT AS SHOWN. SEE SECTION E-E SHEET 2.
4. WHERE DETAIL (3) FALLS AT FORMERS, REMOVE EXISTING R3001 (5/16 HUCK BOLTS) AND DRILL OUT HOLE WITH LETTER "O" DRILL AND INSTALL EYE-BOLT. WHERE 1/4 EYE BOLT FALLS AT FORMERS, REMOVE EXISTING R3001 HUCK BOLTS AND DRILL OUT HOLES WITH LETTER "F" DRILL AND INSTALL EYE-BOLT. EXCEPT STATION 482.
5. WHERE BELT ATTACHMENT STRAPS FALL AT EXISTING HOLES IN MAGNESIUM EXTRUSION, DRILL OUT EXISTING HOLES WITH LETTER "O" DRILL AND INSTALL STRAPS. WHEN NEW HOLES ARE NEEDED FOR STRAPS, DRILL THRU WITH LETTER "O" DRILL.
6. EQUIVALENT SCREW MAY BE USED.
7. WORKMANSHIP OF WELDING SHALL BE IN ACCORDANCE WITH SPEC. MIL-T-5021 CLASS A.

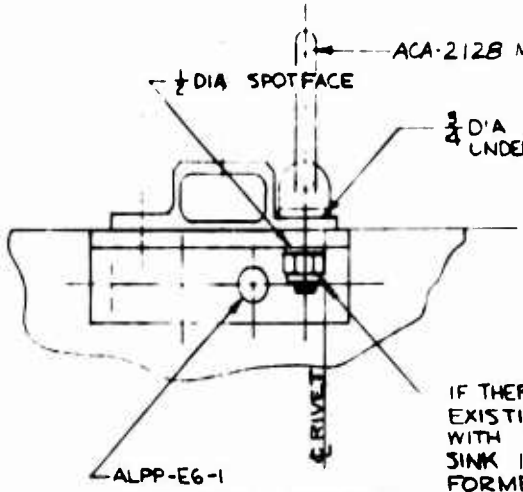


IF THERE IS INTERFERENCE BETWEEN EXISTING RIVET & NUT, REPLACE RIVET WITH AN426AD5 (FLUSH HEAD). COUNTERSINK IS TO BE ON FORWARD SIDE OF FORMER.

THIS BOLT REPLACES EXISTING RIVET AS SHOWN. AN3C BOLT OPTIONAL.

SECTION A-A
STATION 140 ONLY

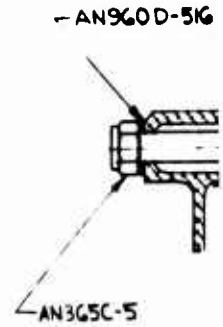


SECTION

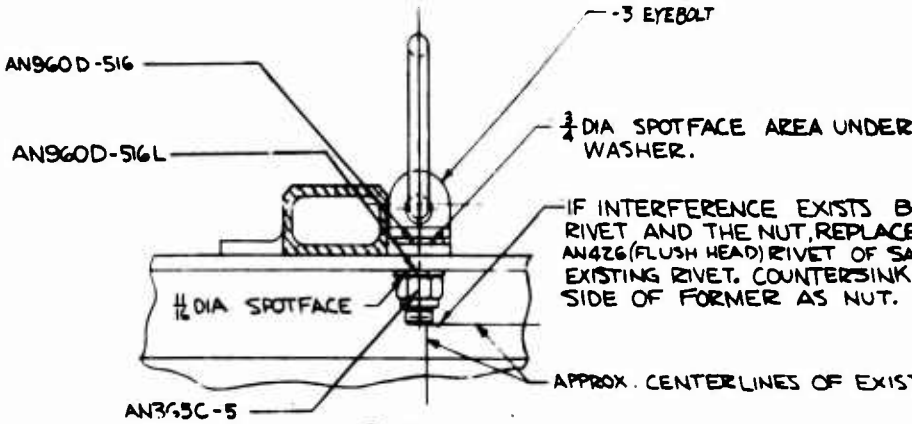


SECTION C-C

THE NOTES OF THIS SECTION ARE TYPICAL FOR ALL STATIONS WHERE (-3) EYE-BOLT IS USED.

¾ DIA. SPOTFACE AI
UNDER EYE-BOLT

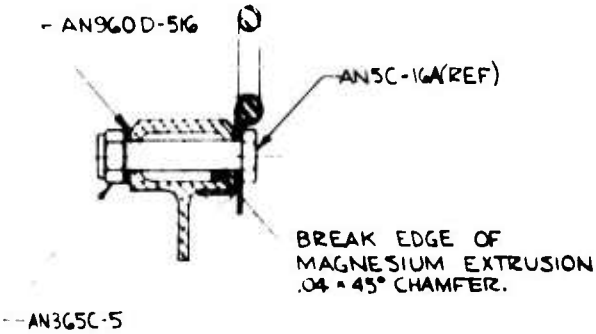


SECTION B-B (TYPICAL FOR ALL -4 INSTALL)

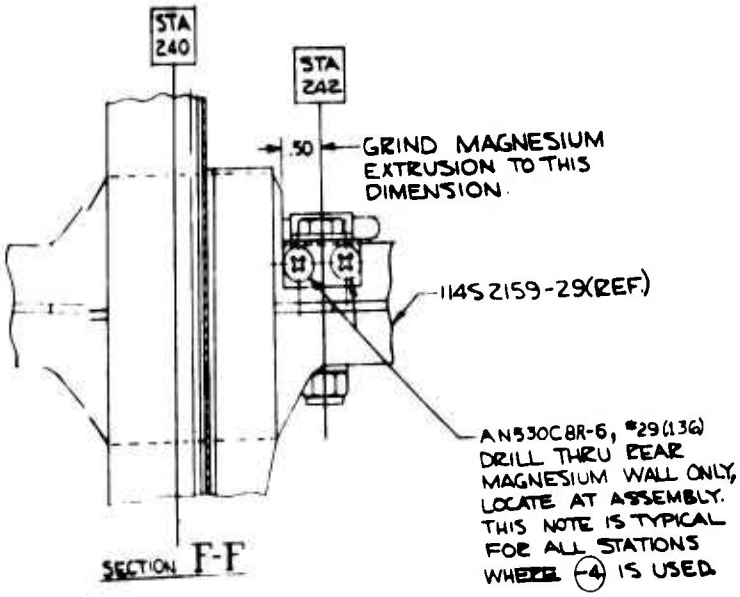


SECTION F-F

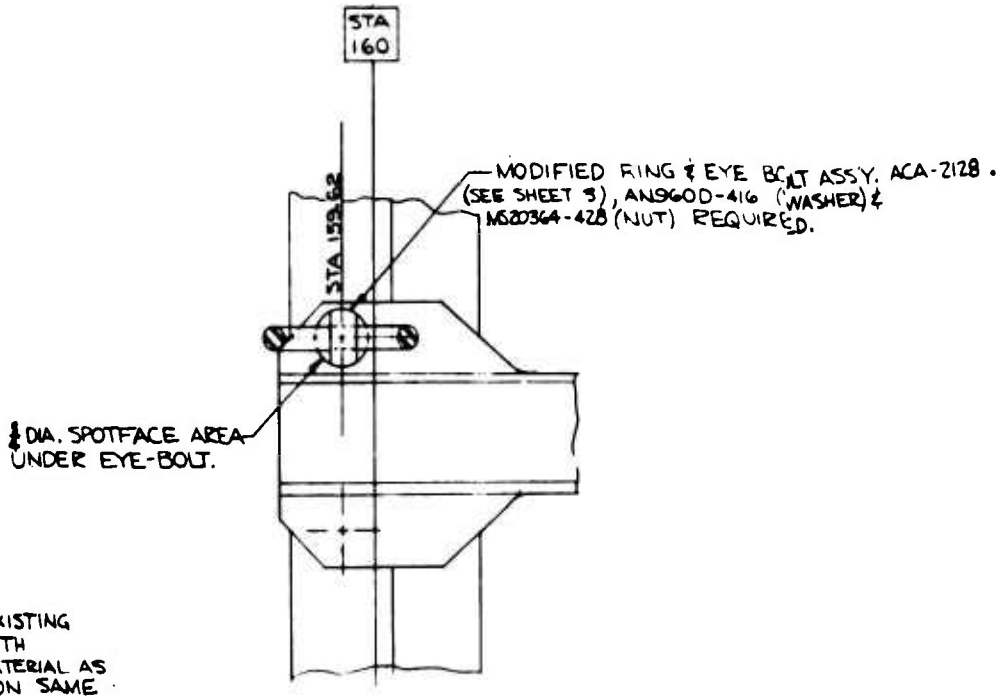


EXISTING
WITH
MATERIAL AS
ON SAME

T.

SECTION E-E

THIS SECTION APPLIES TO R H SIDE ONLY.

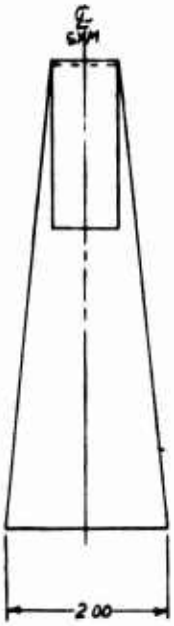


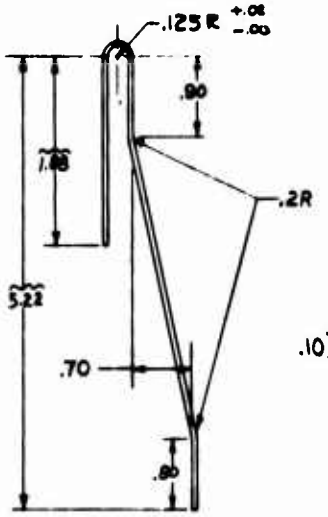


DETAIL (-1)
LARGE BELT ATTACHMENT
MATL.- 4130 ANNEALED .040 THICK SHEET.

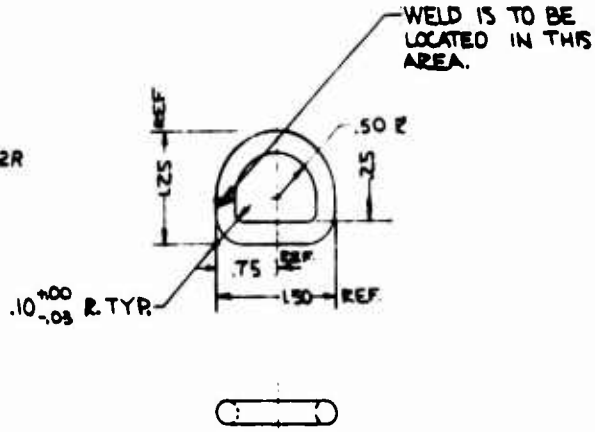


DETAIL (-2)
"D" RING
MATL.- 4130 ANNEALED .25 DIA. ROD
THIS PART MAY EITHER BE A WELDED ROD (AS SHOWN) OR A FORGING.

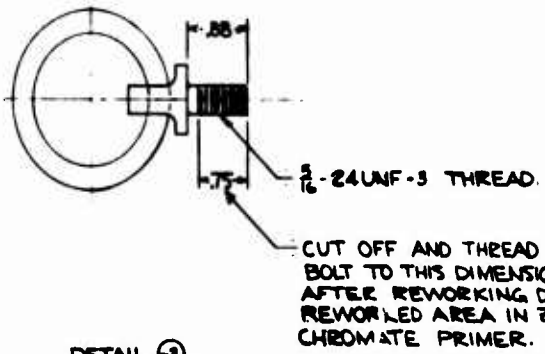


DETAIL (-3)
THIS RING AND EYE BOLT IS TO BE MADE FROM THE CAF1289 RING & EYE BOLT ASSEMBLY USED BY THE DE HAVILLAND AIRCRAFT OF CANADA LIMITED, TORONTO ON THE AC-3 CARIBOU.

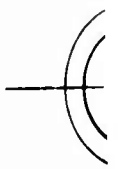

MODIFIE
THIS RIN
MADE FI
& EYE B
HELICOP
WT.-.109
USE EXIS
(NUT) WH
IS INST

WELD IS TO BE LOCATED IN THIS AREA.

.50 R

EF.

D .25 DIA. ROD
ER BE A WELDED ROD
RGING.

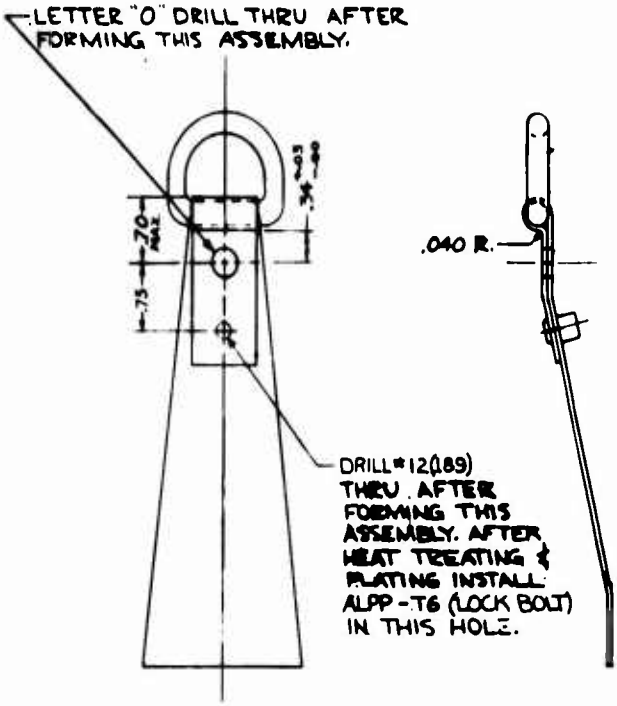


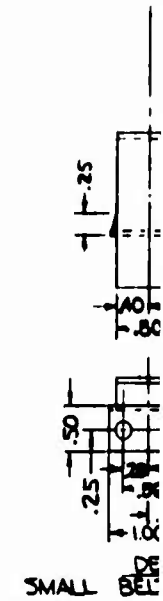


SMALL BEL
MATL.- 4130

ASSEMBLY OF DETAILS -1 & -2

BEFORE ALPP-T8 IS INSTALLED HEAT TREAT THIS ASSEMBLY TO 150,000 PSI TENSILE STRENGTH. AFTER HEAT TREATING CADMIUM PLATE BOTH PARTS, THEN INSTALL THE LOCK BOLT.
(3 ASSEM REQ. PER AIRCRAFT)

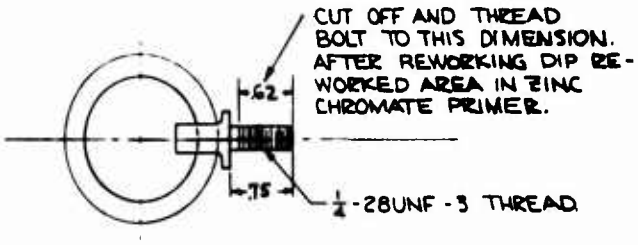


MODIFIED RING & EYE BOLT ASSEMBLY.
THIS RING & EYE-BOLT IS TO BE MADE FROM THE EXISTING RING & EYE BOLT (ACA-2128) ON THE VERTOL HC-1B HELICOPTER. 4 REQ'D. PER AIRCRAFT
WT.-.109 LBS. EACH
USE EXISTING AN960D416 (WASHER) & MS20364-428 (NUT) WHEREVER THIS RING & EYE-BOLT IS INSTALLED. WT. WASHER =.0009#, WT. NUT = .011#

2

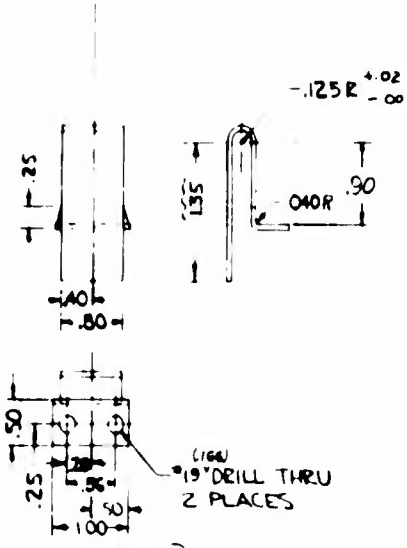


DETAIL -4

SMALL BELT ATTACHMENT

MATL - 4130 ANNEALED .040 THICK SHEET.

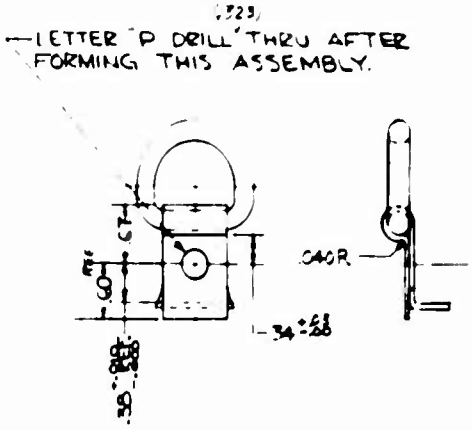


FINAL ASSEMBLY OF DETAILS -2 & -3

HEAT TREAT THIS ASSEMBLY TO 150,000 PSI TENSILE STRENGTH. AFTER HEAT TREATING CADMIUM PLATE BOTH PARTS.

(34 ASSEM REQ PER AIRCRAFT)

-2
HEAT
STRENGTH
BOTH PARTS.

T)

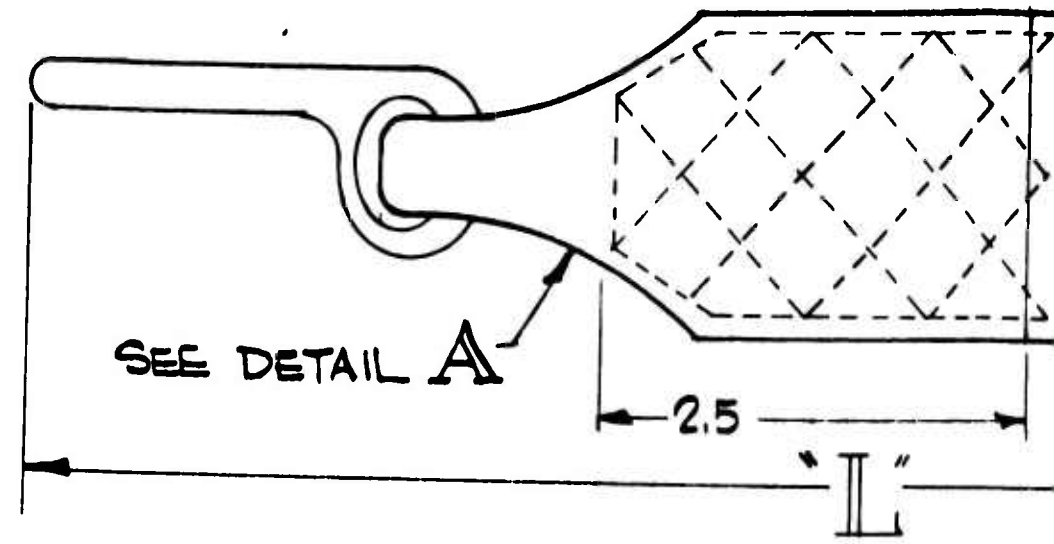


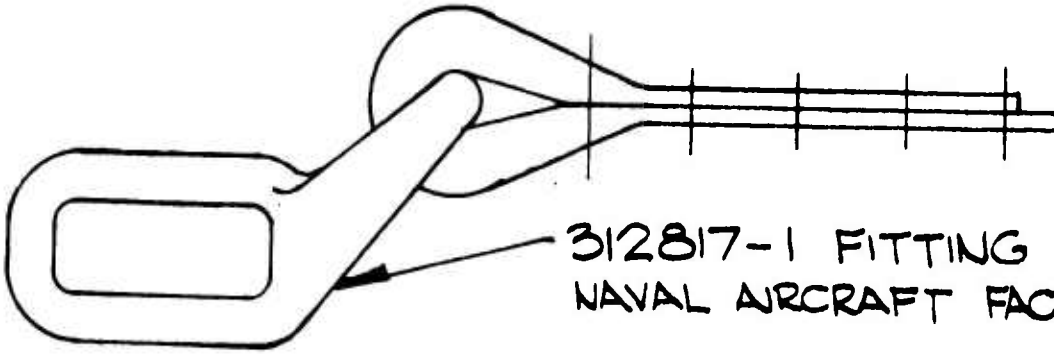


5. DACRON WEBBING TYPE II PER SPEC. MIL-W-
.065 - .085 THICK × 1.72 WIDE MAX.
WT. 2.10 OZ. / YD. MAX.
4. STITCHING SHALL BE WITH NYLON CORD, MIL-T-
NO. 3 SIZE TYPE I OR II, CLASS I, AND SHALL
NOT LESS THAN 6 NOR MORE THAN 8 STITCHE
IN ACCORDANCE WITH SPEC. DDD-S-751 TYPE
3. ENDS OF STITCHING SHALL BE BACK STITCHED O.
2. SEAR ENDS OF ALL WEBBING TO PREVENT FRAY
1. STITCHING INDICATED BY DOTTED LINES - - -
NOTES:

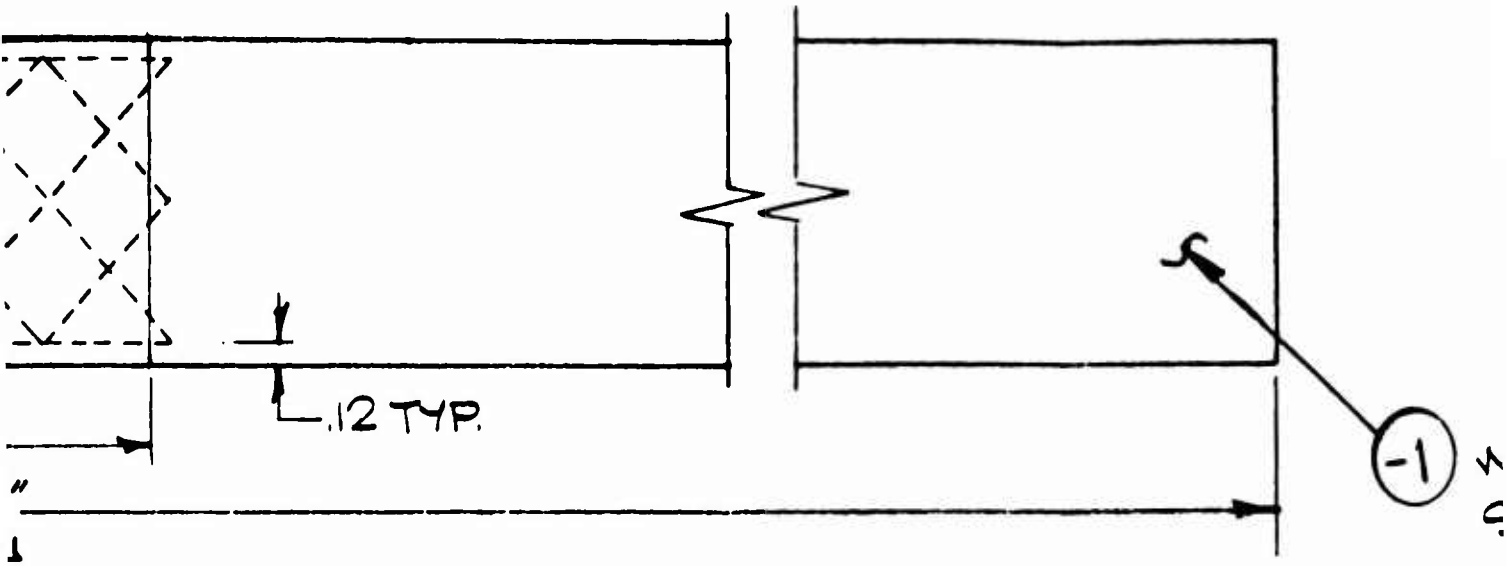


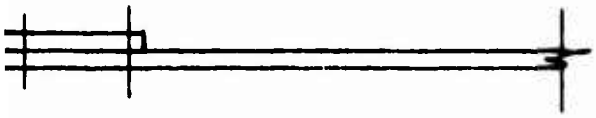

TTING
.FT FACTORY

MIL-W-25361

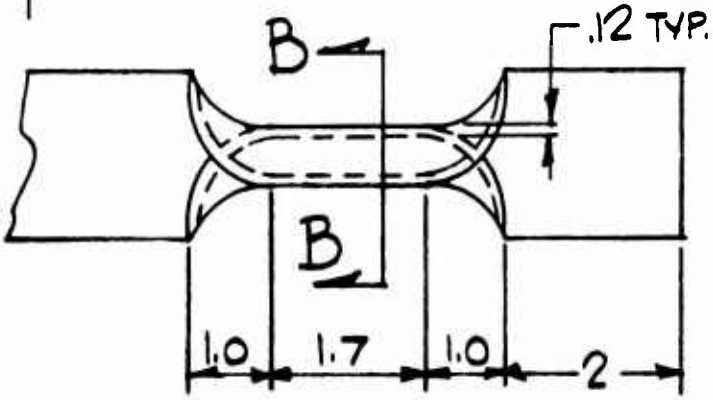


DETAIL A
HALF SIZE

), MIL-T-7807B
) SHALL CONTAIN
STITCHES PER INCH
51 TYPE 301
CHED 0.5 IN. MIN.
JT FRAYING
.S - - - - - - -

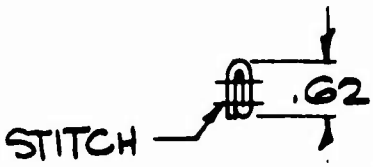


SECTION B

1

2

| LENGTH OF STRAP | | |
|---|---|---|
| AIRCRAFT | "L" DIM. | NEXT ASSEMBLY. |
| HC-1 | 18.1 | HC-1-14 |
| HU-1 | 16.5 | HU-1-11 |
| AC-1 | 20.8 | AC-1-10 |

-1 WEBBING
SEE NOTE #5



3

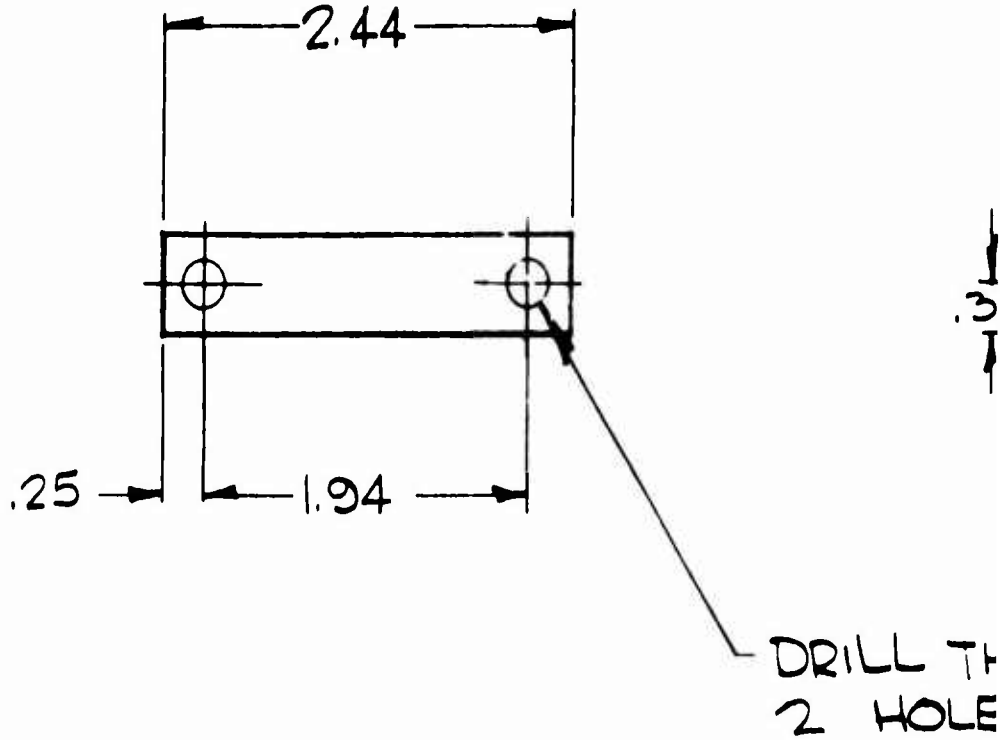


NOTE:-

1. BREAK SHARP EDGES .02 R.

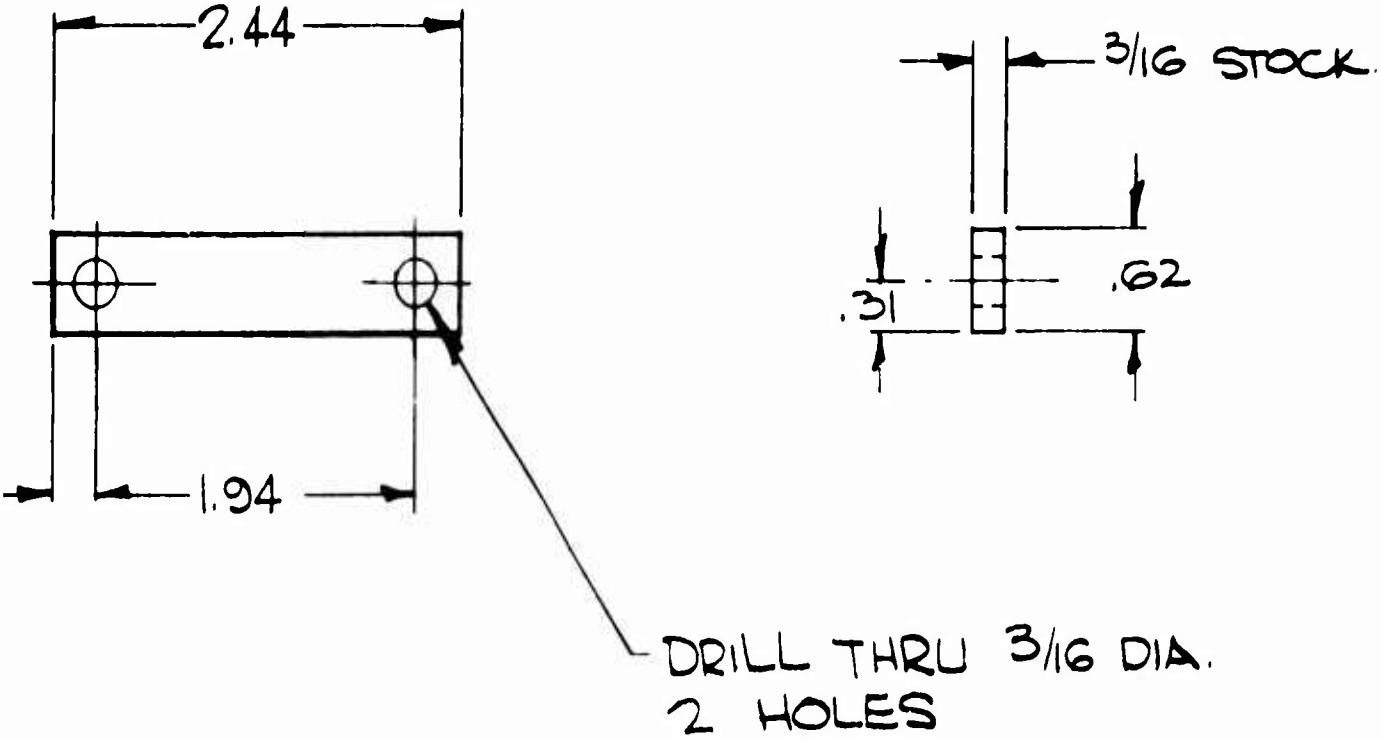


K SHARP EDGES .02 R.