UNCLASSIFIED

AD 419031

DEFENSE DOCUMENTATION CENTER

FOR

SCIENTIFIC AND TECHNICAL INFORMATION

CAMERON STATION, ALEXANDRIA, VIRGINIA

UNCLASSIFIED

NOTICE: When government or other drawings, specifications or other data are used for any purpose other than in connection with a definitely related government procurement operation, the U. S. Government thereby incurs no responsibility, nor any obligation whatsoever; and the fact that the Government may have formulated, furnished, or in any way supplied the said drawings, specifications, or other data is not to be regarded by implication or otherwise as in any manner licensing the holder or any other person or corporation, or conveying any rights or permission to manufacture, use or sell any patented invention that may in any way be related thereto.

CATALOGED BY DDC
AS AD No. 419031

64-5

Unclassified

Fabrication Of An HK31A Magnesium Alloy Airframe Skin

By
J. A. Warnken
W. H. Busch

June 1963

Contract No. DA-33-008-ORD-2084
R and D Project No. TN2-8106
Department Of The Army Project No. 512-15-023

Prepared By
The Lodge & Shipley Co.
3055 Colerain Ave.
Cincinnati, Ohio

For

Tactical Atomic Warheads Laboratory
Nuclear Engineering Directorate

Unclassified

ABSTRACT

The forming of typical contoured airframe skins by Shear Forming or Floturning normally requires a preformed blank. The press forming of HK31A Magnesium Alloy must be done on heated dies.

A fabrication procedure combining template controlled power spinning and Floturning would make it possible to start with a flat blank thereby eliminating the problems encountered with heated press dies.

The various operation configurations and thicknesses are calculated using standard Floturn methods combined with new methods of calculating material displacement so as to provide uniform ratios of reduction.

Two test lots of material were processed through the first three of four operations. After the first lot, the blank thickness was increased and the thickness of all operations re-calculated to compensate for over-thinning encountered due to material ductility.

The feasibility of forming contoured airframe skins of HK31A Magnesium Alloy is proven, provided the temperature of the tooling and workpiece is maintained at 700°F. The last operation was not completed due to problems of tooling distortion encountered at operating temperature.

TABLE OF CONTENTS

	Page
PART I	
Object	1
Summary	1
Conclusions	1
Recommendations	1
PART II	
Introduction	2
Application of theory to specific part	5
Operational procedure	5
Appendix A	
Original Calculations	A-1 to A-24
Appendix B	
Processing Steps in fabrication of first sample part	B-1 to B-31
Appendix C	
Processing Steps of third lot of material	C-1 to C-53

LIST OF FIGURES

Figure		Page
1	Basic Theory	2
2	Basic Theory Applied to Contour	2
3	Constant Wall From Machined Blank	3
4	Constant Wall From Preformed Blank	3
5	Combined Spinning And Floturning	4
6	Drawing Of Part	Facing 6
7	Fourth Operation	Facing 6
8	Third Operation	Facing 6
9	Second Operation	Facing 6
10	First Operation	Facing 6
1-C	First Operation Processing	C-4
2-C	Location of Thickness Gaging Points	C-5
3-C	Second Operation Processing Part #2 and #3	C-19
4-C	Second Operation Processing Part #4	C-19
5-C	Second Operation Processing Part #5 and #6	C-20
6-C	Second Operation Processing Part #7, #8 and #9	C-20
7-C	Second Operation Processing Part #10	C-21
8-C	Second Operation Processing Part #11 thru #20	C-21
9-C	Third Operation Processing Part #3	C-35
10-C	Third Operation Processing Part #5	C-35
11-C	Third Operation Processing Part #6	C-36
12-C	Third Operation Processing Part #2	C-36
13-C	Third Operation Processing Part #7	C-37
14-C	Third Operation Processing Part #8	C-37
15-C	Special Auxiliary Template	C-38
16-C	Third Operation Processing Part #9, #10, #13 and #20	C-39
17-C	Third Operation Processing Part #16 and #11	C-39

DISTRIBUTION LIST	No. of Copies
Commanding Officer Picatinny Arsenal Dover, New Jersey Attention: Purchasing Officer ORDBB-PB1	10
Commanding Officer Cincinnati Ordnance District 230 East Ninth Street Cincinnati 2, Ohio Attention: Contracting Officer	1
Commanding General Attn: AMCRD-DE-W U. S. Army Material Command Washington 25, D. C.	1
Commanding Officer Armed Services Technical Information Agency Arlington Hall Station Arlington 12, Virginia	10
Commanding Officer Ordnance Corps Diamond Ordnance Fuze Laboratories Washington 25, D. C.	1
Office of Technical Service Department of Commerce Washington 25, D. C. Attention: Acquisitions Section	2
The Dow Metal Products Company Division of Dow Chemical Company 916 Shoreham Building Washington 5, D. C.	1

FABRICATION OF AN HK31A MAGNESIUM ALLOY AIRFRAME SKIN

PROJECT TN2-8106

CONTRACT NUMBER: DA-33-008-ORD-2084

PART 1.

Object:

The object of this program was to fabricate Ogival contoured airframe skins of HK31A Magnesium Alloy utilizing the roll forming technique.

Summary:

The configuration of typical contoured airframe skins generally requires that a drawn preform is necessary to satisfy the basic theory of axial displacement of material by strict adherence to standard shear forming procedures.

Since the forming of HK31A Magnesium Alloy by conventional press methods requires heated dies, a fabrication procedure that would eliminate the requirement for preformed blanks would permit more effective utilization of the advantages of the shear forming process.

The forming of HK31A Magnesium Alloy by a combination of shear forming and spinning had been successfully accomplished through the first three of the four forming operations. Due to the tooling problems encountered with elevated temperature coupled with the extreme slenderness ratio of the fourth operation arbor, the fourth forming operation was unsuccessful. Accordingly, the required fabrication and delivery of six airframe skins were not made.

Conclusions:

The forming of Ogival Contoured Airframe Skins of HK31A Magnesium Alloy by a combination of shear forming and template-controlled power spinning starting with a flat blank of sheet or plate stock is entirely feasible, provided that the workpiece and tooling are maintained at a suitable temperature.

Recommendations:

Based upon the results of this problem, the outlined procedure for fabricating Ogival Contoured Airframe Skins should be adopted as the standard manufacturing method for all future requirements.

Additional development work would be required to arrive at the best methods of overcoming or compensating for differential expansion between the tooling material and workpiece material, and to eliminate tooling distortion caused by non-uniform heating of the tooling.

PART II

Introduction:

The basic theory of Shear Forming is based upon the axial displacement of material. This theory, in its simplest form, can be illustrated by the relation between a flat blank and a straight sided cone made from a flat blank as shown in Figure 1.

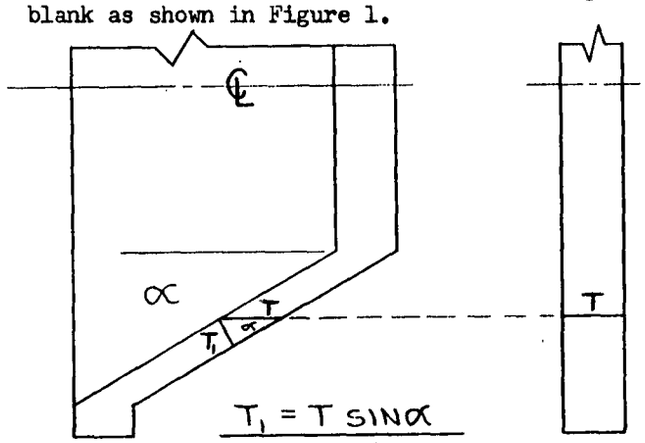

FIGURE 1

The thickness obtained is determined by the starting blank thickness and the angle of the part. Since the blank thickness remains constant as well as the angle of the part, the thickness produced will be constant throughout the length of the cone.

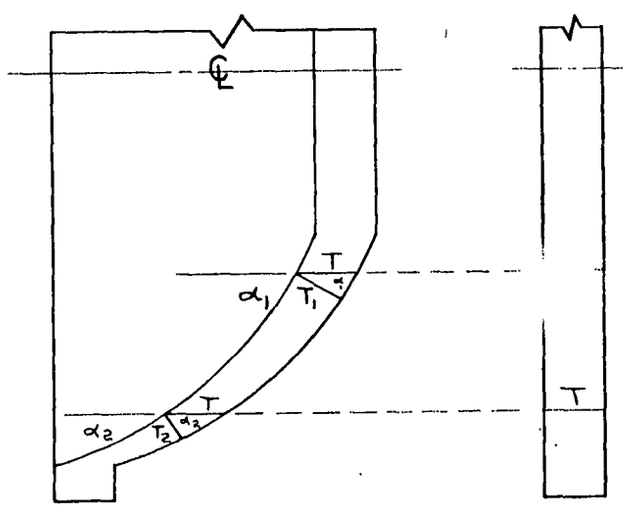

FIGURE 2

If a contoured part were made from a flat blank by means of Shear Forming alone, the results would be as indicated in Figure 2.

Since the side angle of the part is continuously changing, the thickness of the part would taper throughout the length of the contoured section.

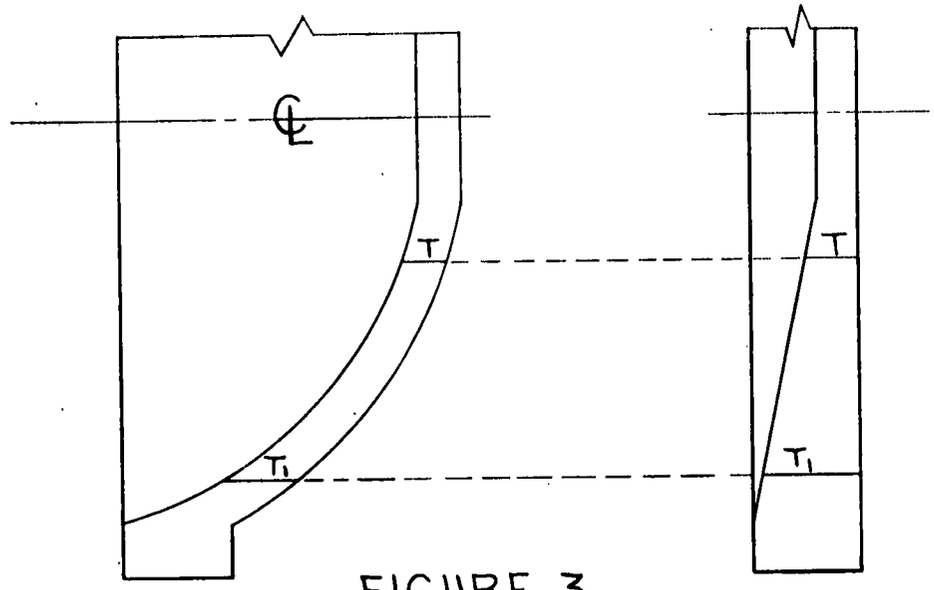

FIGURE 3

In order to produce a contoured part with a uniform wall thickness, by axial displacement alone, a blank must be provided which has a suitable axial thickness at any distance from the center line of the part. Figure 3 shows this requirement and also one possible solution. This approach requires that a very thick piece of material be used and considerable time be expended to obtain the desired variation of axial thickness. The desired condition may be obtained more readily by using a suitably shaped preformed blank as shown in Figure 4.

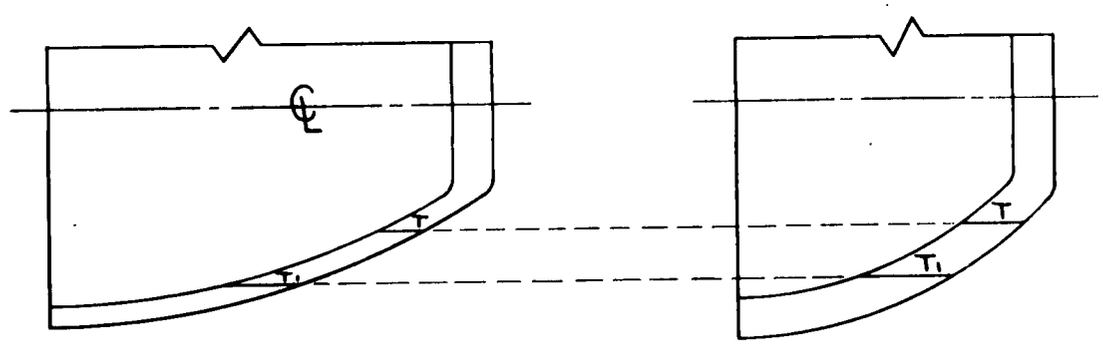

FIGURE 4

In order to overcome the need for Press Forming a blank, it was felt that a variation of the Shear Forming procedure could be devised whereby the axial thickness could be increased by gathering material from a larger diameter. Figure 5 illustrates the basic idea as applied to a simple, one-step operation.

The contoured part shown in Figure 5 is considered to be composed of a number of straight sided conical sections all having the same normal thickness but with the axial thickness increasing as the side angle becomes smaller. Therefore, T'' is greater than T'. The axial thickness of all incremental conical sections is greater than the thickness of the flat starting blank although the normal thickness of the part is less than the starting thickness. The forming of the part would have to be done in such a manner that the volume of material in each incremental conical section came from a suitable section of the starting blank. Later in the report, this approach will be further clarified and applied to multiple operations.

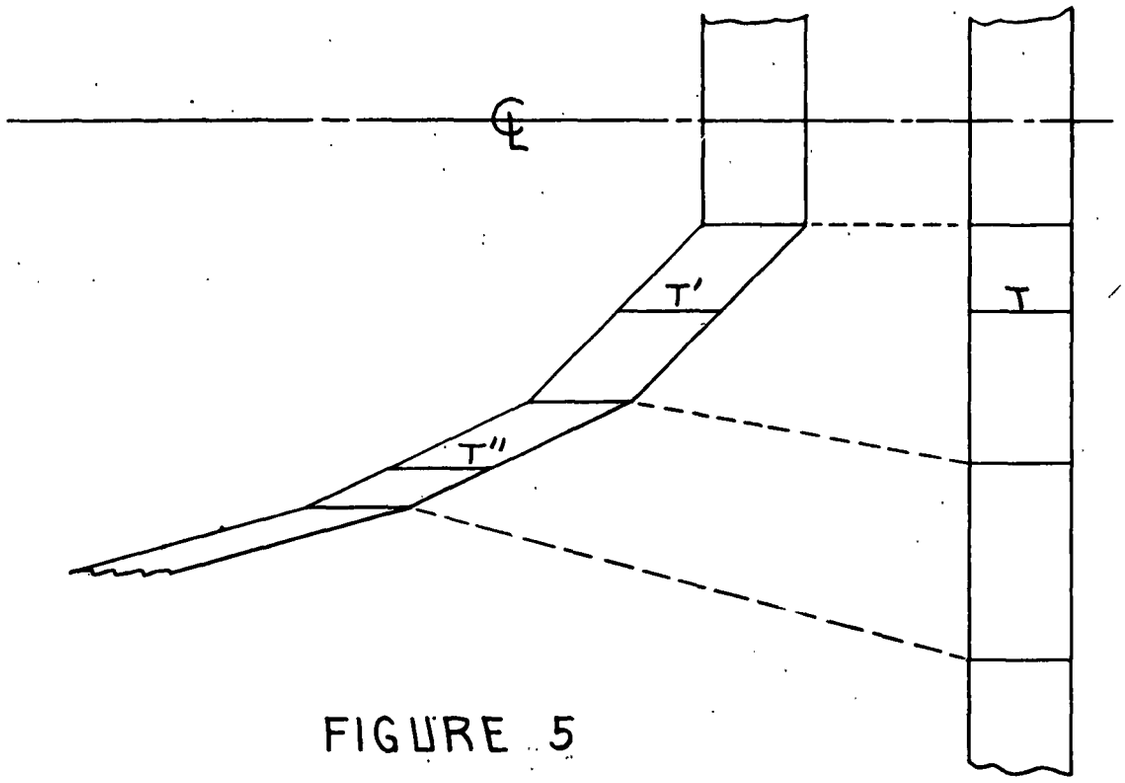

FIGURE 5

APPLICATION OF THEORY TO SPECIFIC PART

A detailed study of Skin, A.K. Section TA-34-130 shown on Figure 6, indicated that four operations would be required starting with a blank thickness of .375. In order to obtain the best results in the fourth operation, all planning was based upon making the first three operations combined Shear Forming and Spinning, while performing just Shear Forming in the fourth operation.

A comparison of thicknesses required and effective angle throughout the contour of the part indicated that from the small end to Station 23 Shear Forming only was required and the resulting thickness up to Station 23 would be more than specified. This excessive thickness would be removed by conventional machining methods after completion of forming.

In order to avoid confusion, point numbers were substituted for station numbers as in earlier operations there would be no direct correlation between the actual length of the part and the station number. Point 0 was placed at Station 10 just beyond the offset at the small end so that, in the event it is desired to relate point numbers to Station numbers, the corresponding station number may be obtained by adding 10 to the point number.

In order to compensate for the tendency of ductile materials to overthin because of material being forced up the arbor, all calculations were based upon the assumption that the starting blank was .340 thick instead of .375, thereby incorporating an allowance of approximately 10%.

All calculations required to establish part configurations in each operation are presented in Appendix A, and the configurations obtained are shown on Figures 7 through 10, and are presented in reverse order of forming so as to correspond to the order of calculations.

OPERATIONAL PROCEDURE

A preliminary lot of fifteen blanks .375 thick were processed through the first three operations so as to obtain preliminary information covering various machine settings and procedures.

Following completion of preliminary work, a second lot of fifteen blanks was processed. A detailed description of the methods used and results obtained on this lot of parts is presented in Appendix B.

As indicated in Section 5 of Appendix B, no significant results were obtained in the fourth operation due to distortion of the arbor when heated to operational temperature. No distortion had been noted when performing the first three operations. However, the first three arbors are relatively short compared to the fourth arbor so that the condition was completely unexpected.

When the arbor was first brought to operating temperature and checked for runout at the small end, it was discovered that runout of the order of .010 T.I.R. existed; however, this was attributed to an error in the machining of the mounting surface at the large end of the arbor. This runout condition at the small end was corrected by inserting shim stock at suitable points between the arbor adapter and the spindle nose.

When a condition had been established which provided a maximum runout of .002 T.I.R. at the small end of the arbor, a short part from the first test lot of blanks was placed on the arbor and Floturned. While no difficulty was encountered as far as material fractures were concerned, a pronounced bubble or raised area appeared in the part. This bubble extended the length of the part and approximately 90° around the part. This condition was visible while the machine was still running and interpreted to mean that an excessive runout condition existed resulting in an unequal gap between the roller and arbor during each revolution of the arbor.

As soon as the part was removed from the arbor, the runout condition was checked, and it was found that the small end of the arbor ran out .010 T.I.R., while at a point at the middle of the arbor the runout was .020 T.I.R. and only .003 at the large end. This runout condition indicated clearly that the arbor was distorted, but it appeared that this difficulty could be overcome by re-machining the arbor while it was held at operating temperature. The roller was removed from the Floturn Machine and replaced with a tool block and a cut taken over the entire surface of the arbor. The depth of cut was held to the minimum which would allow for clean-up.

Following re-machining of the arbor, another part from the first test lot of blanks was placed on the arbor and Floturned. During the Floturn operation a series of very pronounced wrinkles developed in a spiral pattern on one side of the part. These wrinkles were at an angle of approximately 60° to centerline and had a peak to peak length of about one inch. The height of the wrinkles became greater and greater as the operation progressed until several were so great that they were caught under the roller and mashed flat, fracturing the part. The results obtained on this part again indicated that excessive runout of the arbor was causing a variation of the effective gap between the roller and arbor.

As soon as the part was removed from the arbor, a check was made to determine the amount of runout existing at the small end. Without tailstock support the small end of the arbor ran out .030 T.I.R.

As a result of the development of such an excessive amount of runout during the running of a part, extensive checks and observations were made of the behavior of the arbor when heated by the internal rods alone, both when the spindle was stationary and when rotating continuously. As a starting point, the arbor was allowed to remain stationary with the high point of the end runout up. In other words, the small end of the arbor was .015 above centerline. Within a period of fifteen minutes the end of the arbor dropped to a point .004 below centerline, which resulted in a runout of .008 T.I.R. with the high point 180° from the original location.

At first it appeared that the end of the arbor was dropping because it was heated to a point where the arbor material was approaching a plastic state. Further observation of the action of the arbor led to the conclusion that this was not the case but that with the arbor stationary the internal rods tended to heat the portion of the arbor above centerline more than the portion below centerline. As a result of this differential heating, the side of the arbor above centerline expanded more than that below centerline. Further experimentation revealed that the arbor could be restored to a true running condition most quickly by stopping the spindle with the high point down and applying additional heat to the underside by means of a propane torch. The amount of movement of the small end was gaged by means of an indicator contacting the underside of the arbor very close to the small end.

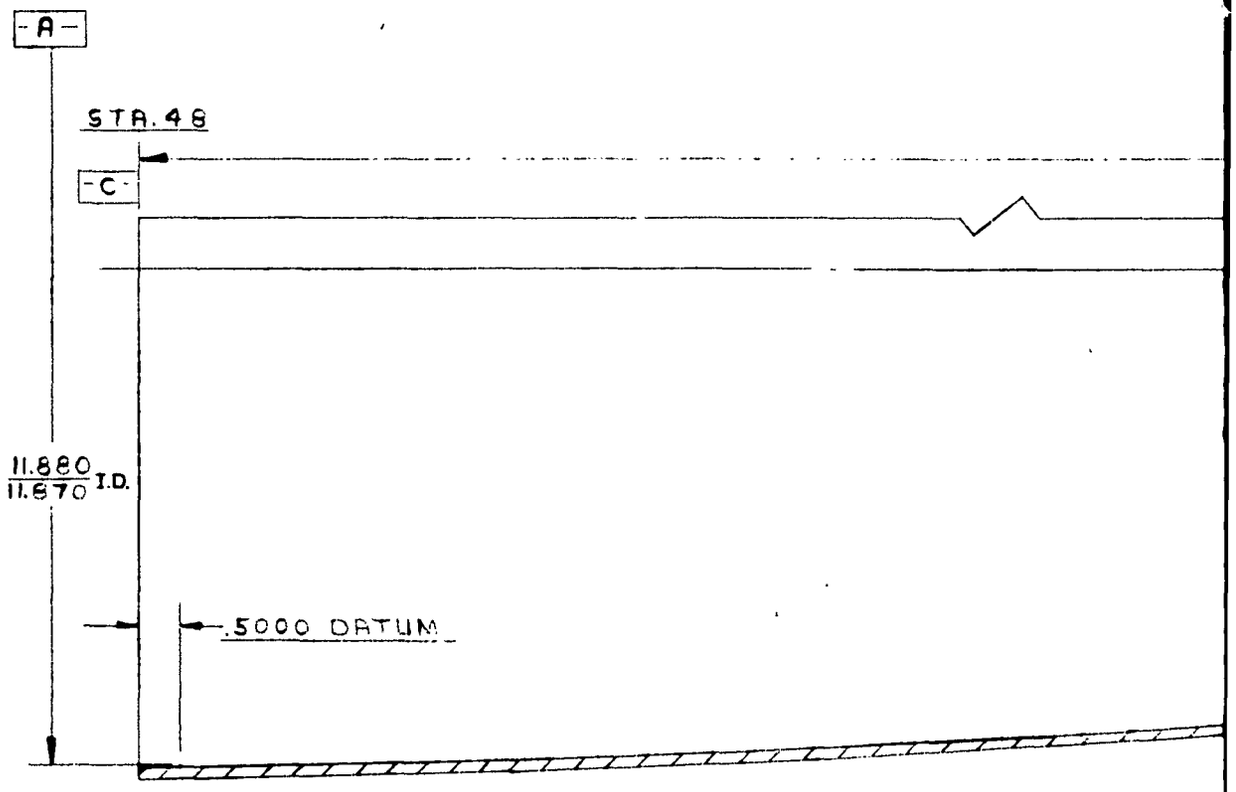

1

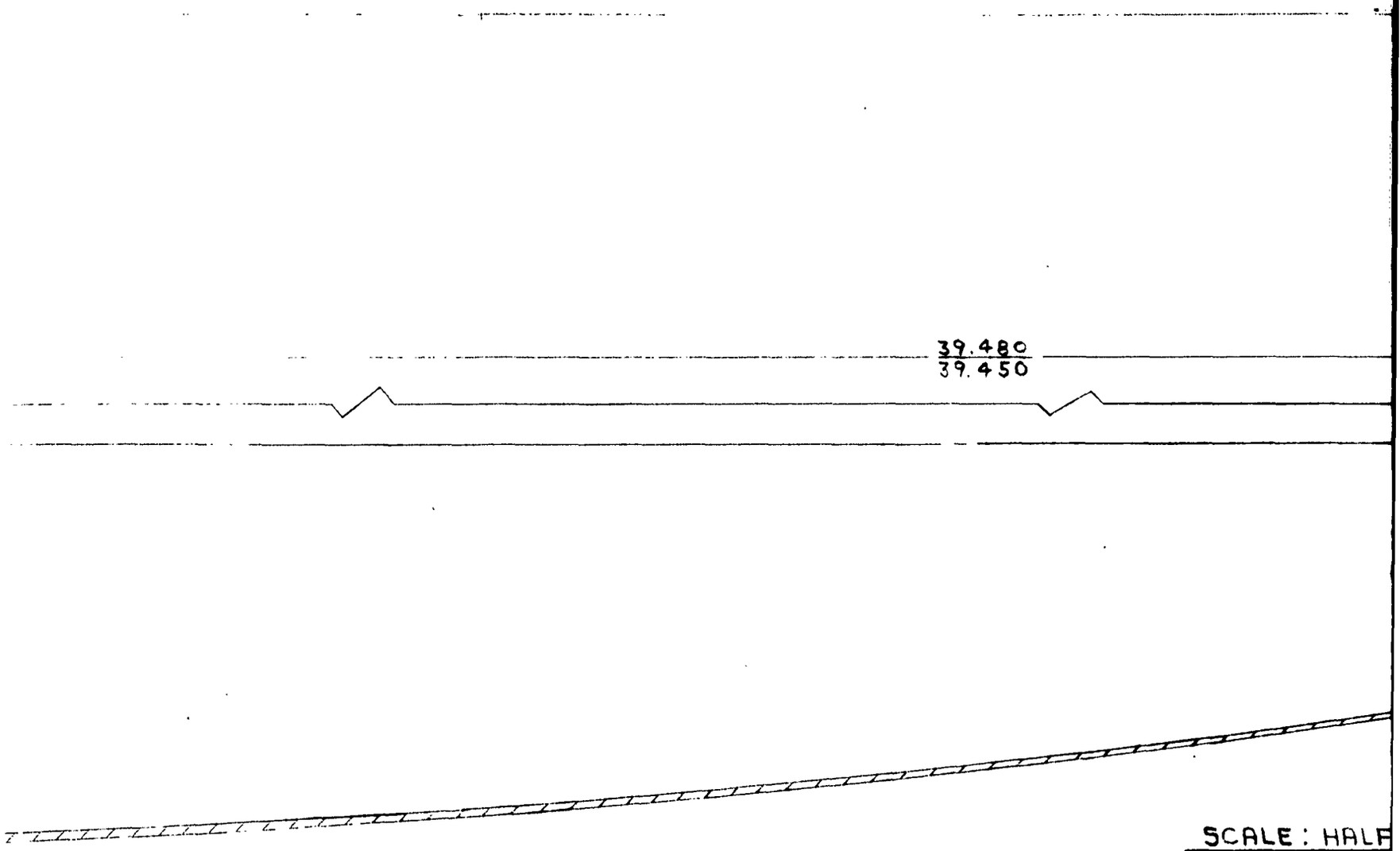

SCALE : HALF

MAT'L: MAGNESIUM ALLOY, MIL-M-26075
CONDITION HK 31A-H24

2

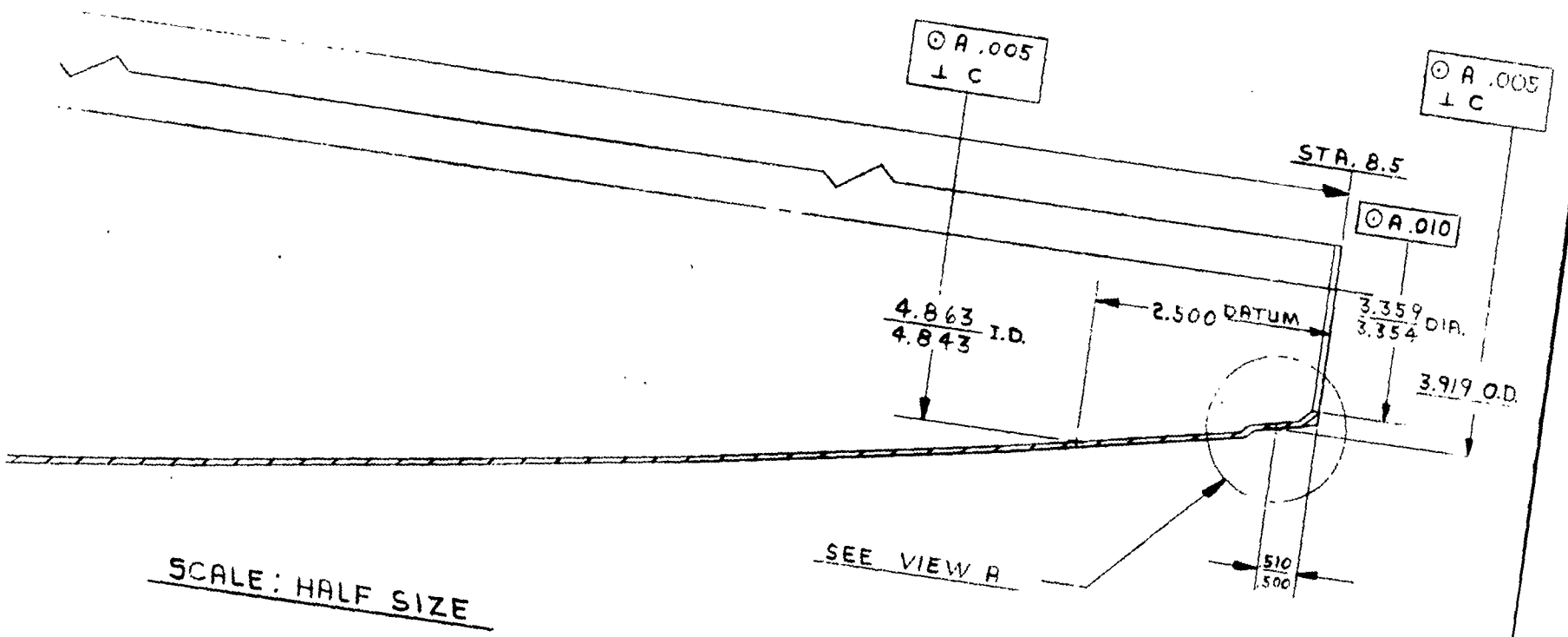

SCALE: HALF SIZE

M-26075

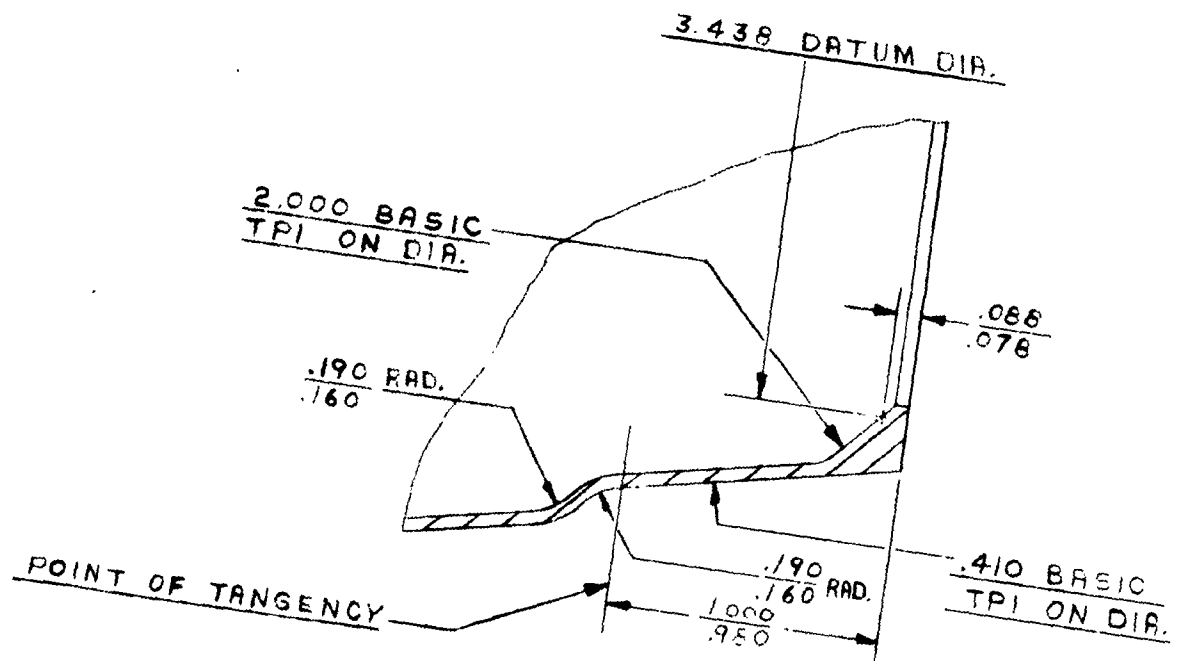

VIEW A
SCALE: 2/1

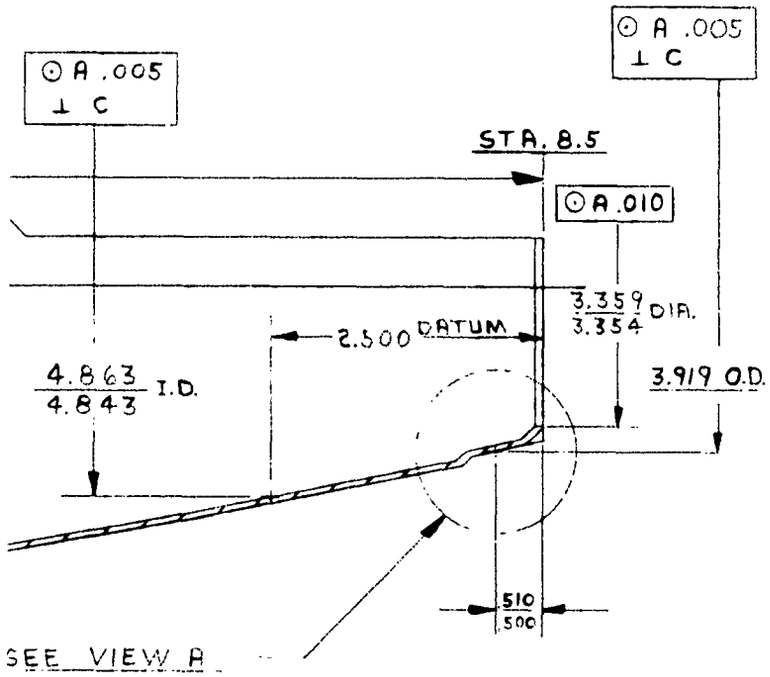

NOTE: PROTECTIVE FINISH: FINISH Nº 8.4 OF MIL-STD-171

SKIN THICKNESS FROM STA. 9.75 FORWARD TO BE .027 ± .004

125 ✓ ALL OVER

THE OUTER SURFACE OF THE PART SHALL BE "FAIR" WITHIN THE FOLLOWING LIMITS IN BOTH LONGITUDINAL AND TRANSVERSE DIRECTIONS: WHEN COMPARED TO A TEMPLATE REPRESENTI THE NOMINAL CONTOUR, THE RATE OF CHANGE OF THE ACTUAL CONTOUR FROM THE NOMINAL SHALL NOT EXCEED .005 PER INCH OF LENGTH

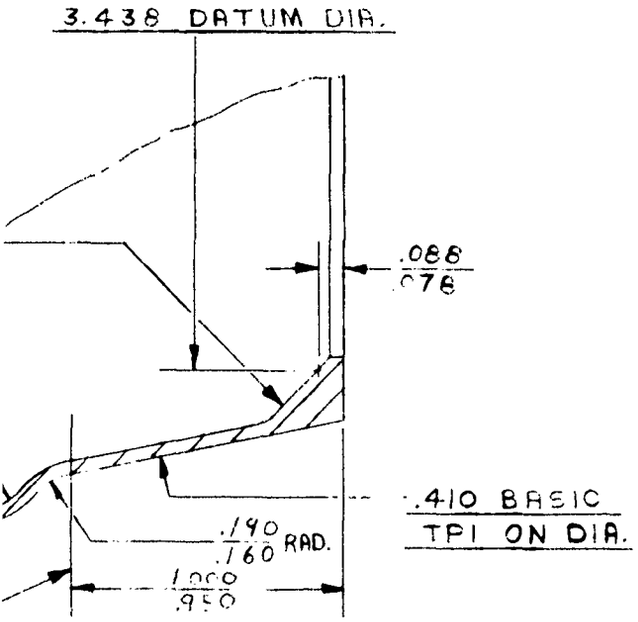

VIEW A
SCALE: 2/1

DRAWING OF PART
FIGURE 6

TECTIVE FINISH: FINISH Nº 8.4 OF
STD-171

THICKNESS FROM STA 9.75 FORWARD
E .027 ± .004

ALL OVER

OUTER SURFACE OF THE PART
L BE "FAIR" WITHIN THE FOLLOWING
TS IN BOTH LONGITUDINAL AND
NSVERSE DIRECTIONS: WHEN
PARED TO A TEMPLATE REPRESENTING
NOMINAL CONTOUR, THE RATE OF
GE OF THE ACTUAL CONTOUR FROM
NOMINAL SHALL NOT EXCEED
PER INCH OF LENGTH

STA. (DATUM)	INSIDE DIA.	THICKNESS
10	4.463 ±.010	.0294 ±.004
11	4.853	.0303
12	5.232	.0312
13	5.600	.0321
14	5.958	.0330
15	6.304	.0339
16	6.640	.0348
17	6.966	.0357
18	7.281	.0366
19	7.587	.0375
20	7.879	.0384
21	8.163	.0393
22	8.436	.0402
23	8.698	.0411
24	8.948	.0420
25	9.190	.0429
26	9.420	.0438
27	9.641	.0447
28	9.851	.0456
29	10.049	.0465
30	10.237	.0474
31	10.417	.0483
32	10.584	.0492
33	10.742	.0501
34	10.890	.0510
35	11.026	.0519
36	11.152	.0528
37	11.269	.0537
38	11.375	.0546
39	11.471	.0555
40	11.557 ±.010	.0564
41	11.636 ±.005	.0573
42	11.703	.0582
43	11.757	.0591
44	11.801	.0600
45	11.835	.0609
46	11.859	.0618
47	11.872	.0627
48	11.876 ±.005	.0636 ±.004

WING OF PART
FIGURE 6

5

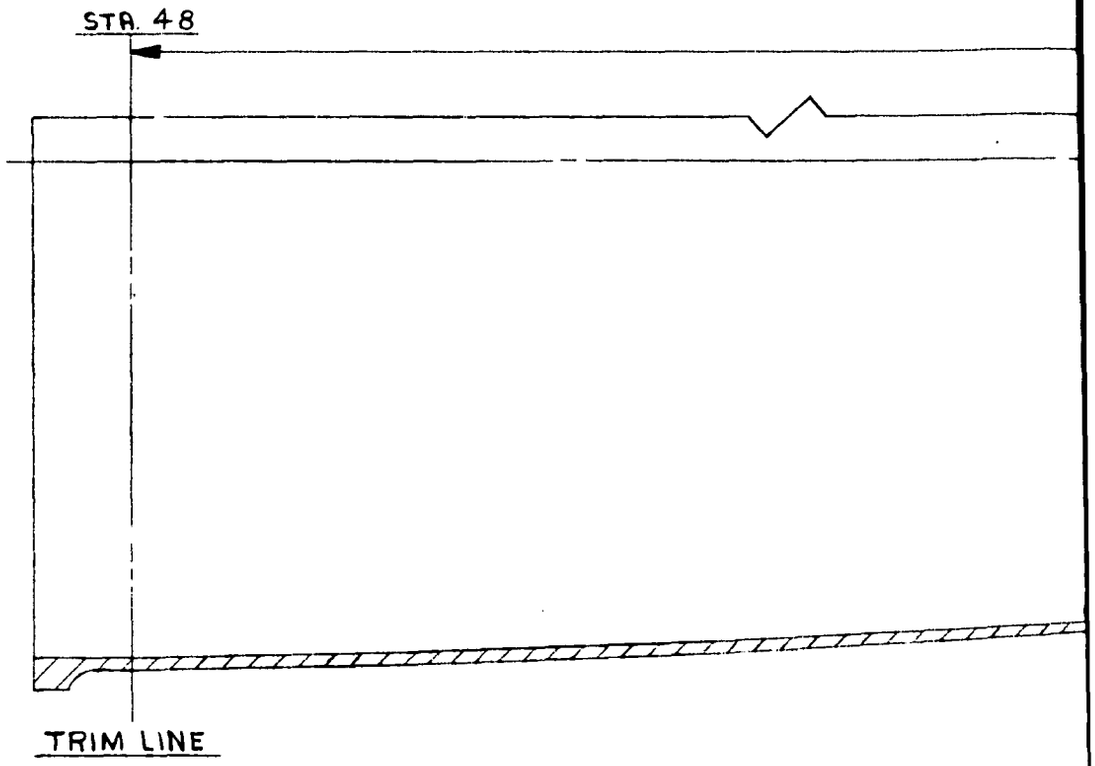

NOTE: 125/ALL

THE OUTER
"FAIR" WITH
BOTH LON
DIRECTION
TEMPLATE
CONTOUR
ACTUAL C
SHALL NO
LENGTH

MAT'L: MAGN
CON

1

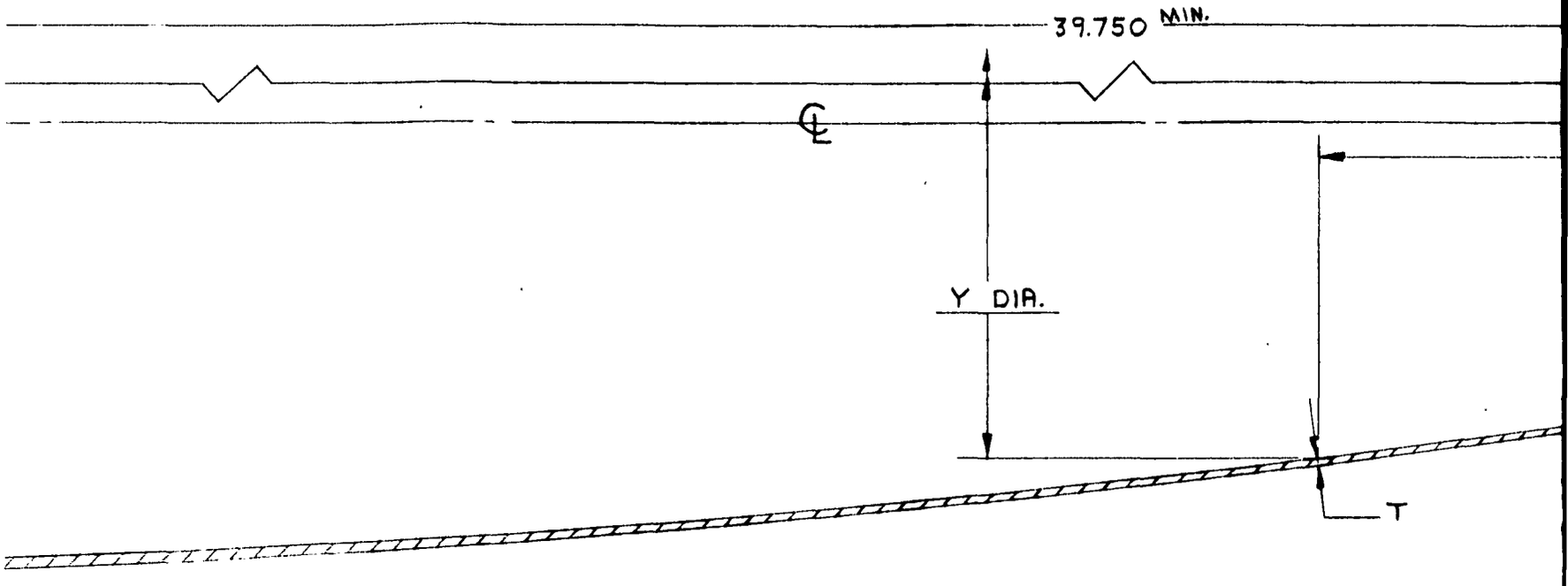

SCALE: HALF SIZE

NOTE: 125 ✓ ALL OVER

THE OUTER SURFACE OF THE PART SHALL BE "FAIR" WITHIN THE FOLLOWING LIMITS IN BOTH LONGITUDINAL AND TRANSVERSE DIRECTIONS: WHEN COMPARED TO A TEMPLATE REPRESENTING THE NOMINAL CONTOUR, THE RATE OF CHANGE OF THE ACTUAL CONTOUR FROM THE NOMINAL SHALL NOT EXCEED .005 PER INCH OF LENGTH

MAT'L: MAGNESIUM ALLOY, MIL-M-26075, CONDITION HK 31A-H24

2

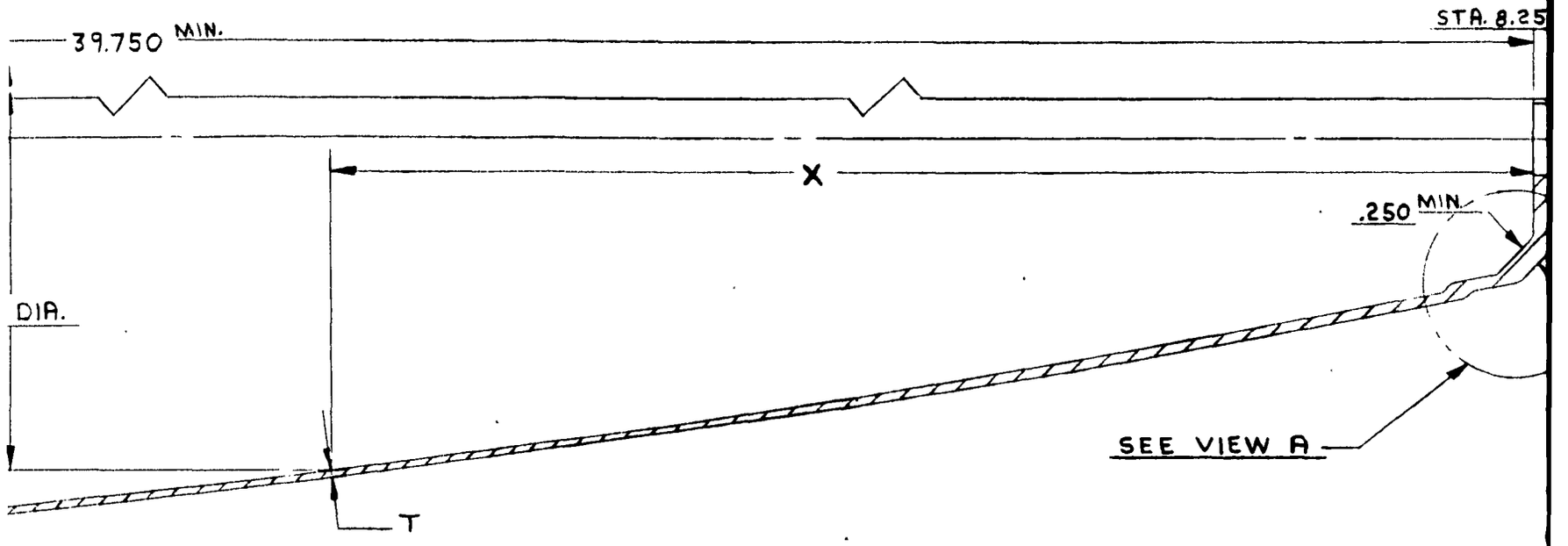

SCALE: HALF SIZE

LL BE
IN
SE

NAL
THE
L
F

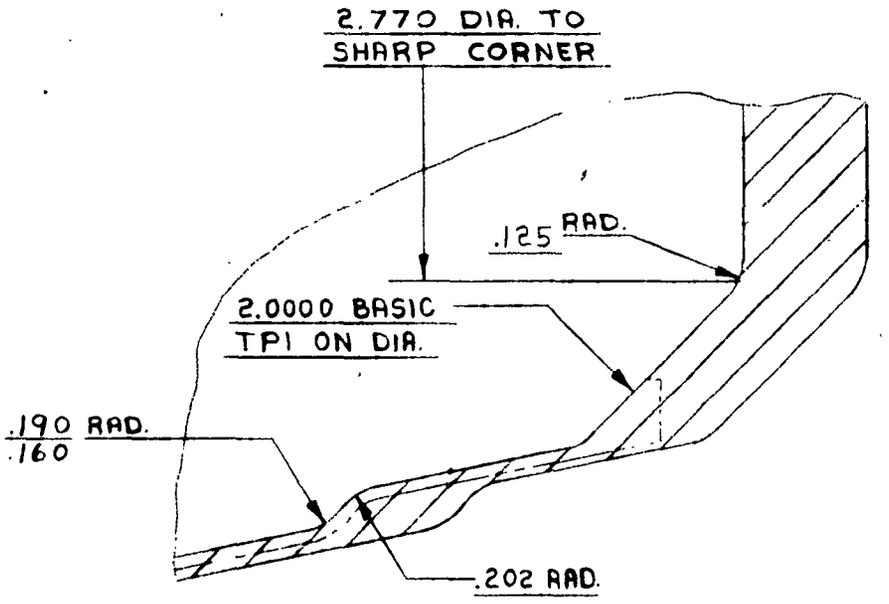

VIEW A
SCALE: 2/1

3

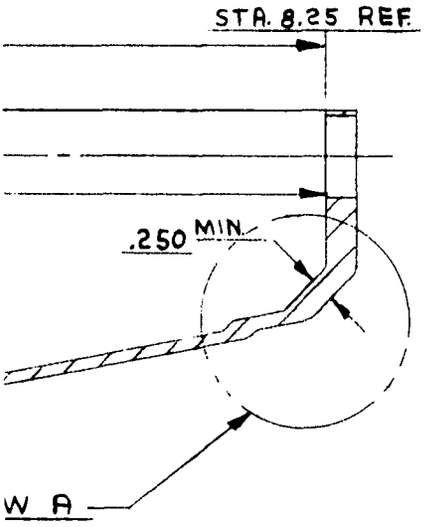

X	Y	THICKNESS-T-
1.750	4.463 ±.010	.064
2.750	4.853	.062
3.750	5.232	.060
4.750	5.600	.058
5.750	5.958	.056
6.750	6.304	.054
7.750	6.640	.052
8.750	6.966	.050
9.750	7.281	.048
10.750	7.587	.046
11.750	7.879	.044
12.750	8.163	.042
13.750	8.436	.0402 ±.004
14.750	8.698	.0411
15.750	8.948	.0420
16.750	9.190	.0429
17.750	9.420	.0438
18.750	9.641	.0447
19.750	9.851	.0456
20.750	10.049	.0465
21.750	10.237	.0474
22.750	10.417	.0483
23.750	10.584	.0492
24.750	10.742	.0501
25.750	10.890	.0510
26.750	11.026	.0519
27.750	11.152	.0528
28.750	11.269	.0537
29.750	11.375	.0546
30.750	11.471	.0555
31.750	11.557 ±.010	.0564
32.750	11.636 ±.005	.0573
33.750	11.703	.0582
34.750	11.757	.0591
35.750	11.801	.0600
36.750	11.835	.0609
37.750	11.859	.0618
38.750	11.872	.0627
39.750	11.876 ±.005	.0636 ±.004

THICKNE
RANGE I
THIS OP
THICKNE
NEXT O
ON DW

THICKNE
RANGE IS
THICKNES
IN THIS

FOU

4

X	Y	THICKNESS-T-
1.750	4.463 ±.010	.064
2.750	4.853	.062
3.750	5.232	.060
4.750	5.600	.058
5.750	5.958	.056
6.750	6.304	.054
7.750	6.640	.052
8.750	6.966	.050
9.750	7.281	.048
10.750	7.587	.046
11.750	7.879	.044
12.750	8.163	.042
13.750	8.436	.0402 ±.004
14.750	8.698	.0411
15.750	8.948	.0420
16.750	9.190	.0429
17.750	9.420	.0438
18.750	9.641	.0447
19.750	9.851	.0456
20.750	10.049	.0465
21.750	10.237	.0474
22.750	10.417	.0483
23.750	10.584	.0492
24.750	10.742	.0501
25.750	10.890	.0510
26.750	11.026	.0519
27.750	11.152	.0528
28.750	11.269	.0537
29.750	11.375	.0546
30.750	11.471	.0555
31.750	11.557 ±.010	.0564
32.750	11.636 ±.005	.0573
33.750	11.703	.0582
34.750	11.757	.0591
35.750	11.801	.0600
36.750	11.835	.0609
37.750	11.859	.0618
38.750	11.872	.0627
39.750	11.876 ±.005	.0636 ±.004

THICKNESS GIVEN IN THIS RANGE IS FLOTURNED IN THIS OPERATION - FINISHED THICKNESS MACHINED IN NEXT OPERATION - SHOWN ON DWG. #2130005

THICKNESS GIVEN IN THIS RANGE IS FINISHED THICKNESS - FLOTURNED IN THIS OPERATION

FOURTH OPERATION
FIGURE 7

5

X	Y	THICKNESS~T
1.385	4.463	.102
2.030	4.853	.098
2.671	5.232	.096
3.308	5.600	.094
3.942	5.958	.092
4.570	6.304	.090
5.195	6.640	.088
5.816	6.966	.086
6.432	7.281	.084
7.044	7.587	.082
7.650	7.879	.080
8.251	8.163	.078
8.848	8.436	.076
9.439	8.698	.076
10.024	8.948	.078
10.605	9.190	.080
11.178	9.420	.082
11.747	9.641	.085
12.309	9.851	.087
12.863	10.049	.090
13.411	10.237	.093
13.953	10.417	.096
14.485	10.584	.099
15.011	10.742	.102
15.528	10.890	.106
16.035	11.026	.110
16.533	11.152	.113
17.022	11.269	.117
17.499	11.375	.122
17.965	11.471	.127
18.419	11.557	.133
18.863	11.636	.138
19.290	11.703	.145
19.695	11.757	.156
20.094	11.801	.160
20.493	11.835	.162
20.893	11.859	.165
21.293	11.872	.167
21.693	11.876	.169

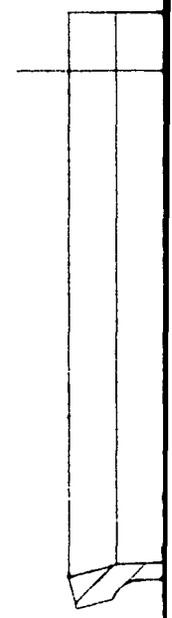

TRIM

1

HICKNESS-T
.102
.098
.096
.094
.092
.090
.088
.086
.084
.082
.080
.078
.076
.076
.078
.080
.082
.085
.087
.090
.093
.096
.099
.102
.106
.110
.113
.117
.122
.127
.133
.138
.145
.156
.160
.162
.165
.167
.169

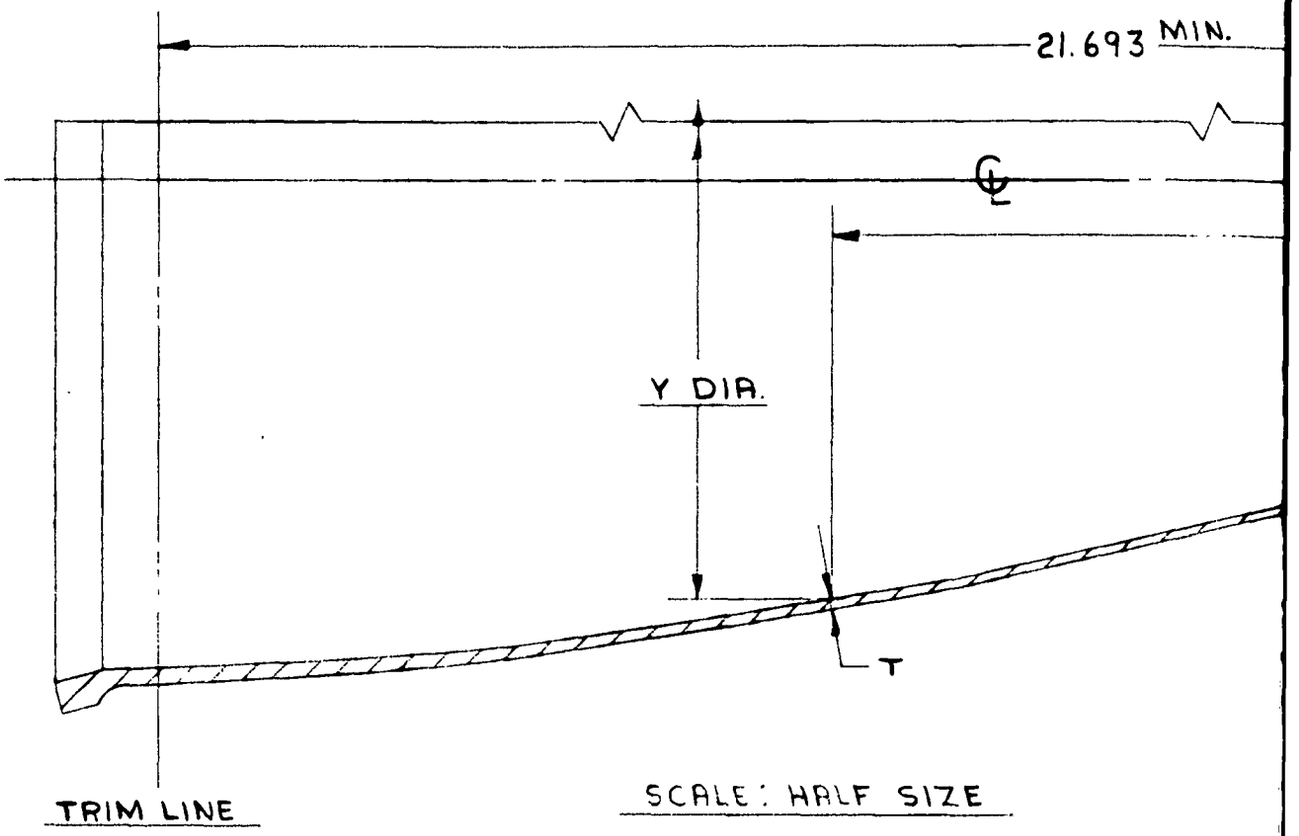

MAT'L: MAGNESIUM ALLOY, MIL-M-26075
CONDITION HK 31A-H24

2

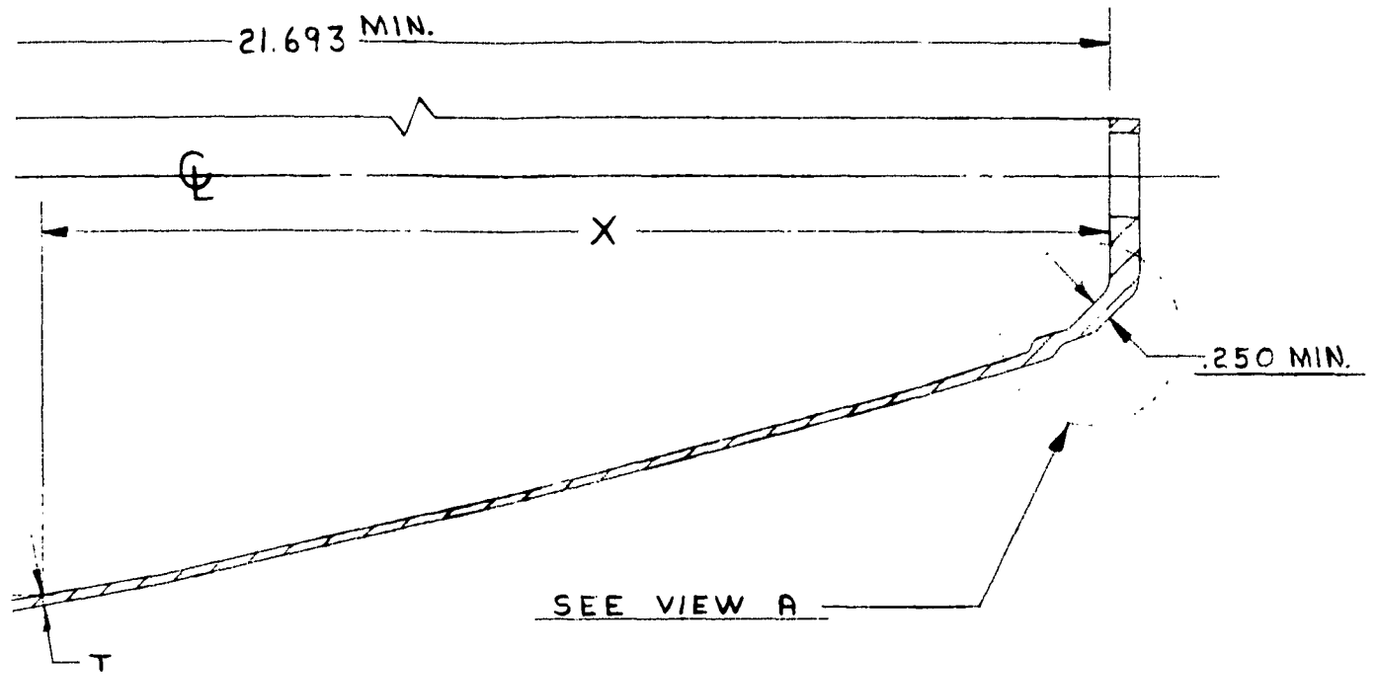

HALF SIZE

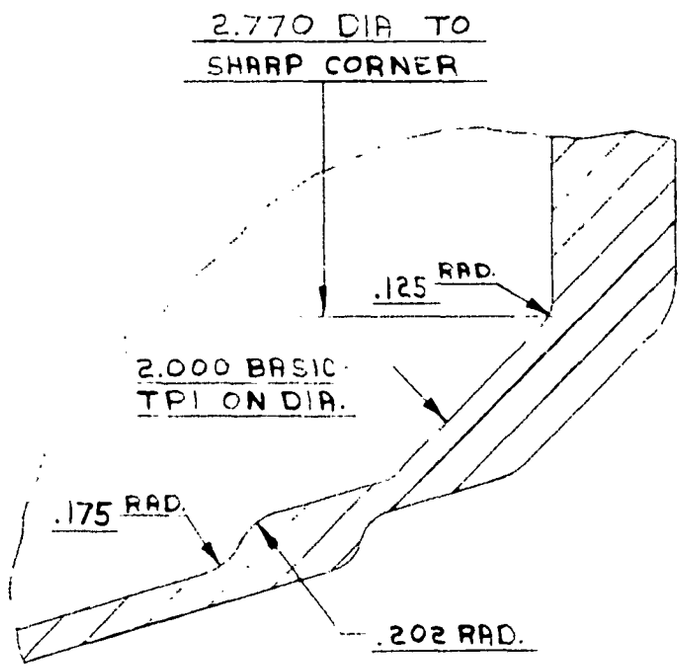

MIL-M-26075
24

VIEW A
SCALE: 2/1

THIRD OPERATION
FIGURE 8

3

X	Y	THICKNESS-T
1.111	4.463	.152
1.512	4.853	.149
1.908	5.232	.147
2.299	5.600	.145
2.686	5.958	.143
3.068	6.304	.140
3.445	6.640	.138
3.817	6.966	.136
4.184	7.281	.134
4.547	7.587	.132
4.902	7.879	.129
5.253	8.163	.127
5.598	8.436	.125
5.937	8.698	.125
6.279	8.955	.127
6.622	9.208	.129
6.964	9.454	.132
7.306	9.694	.135
7.647	9.927	.137
7.988	10.153	.140
8.327	10.371	.143
8.665	10.583	.146
9.002	10.786	.149
9.336	10.981	.152
9.667	11.169	.156
9.997	11.347	.160
10.325	11.516	.164
10.649	11.678	.167
10.969	11.829	.172
11.286	11.971	.176
11.597	12.103	.182
11.905	12.229	.186
12.206	12.340	.193
12.498	12.437	.202
12.789	12.5[illegible]	.206
13.081	12.574	.209
13.374	12.651	.210
13.669	12.681	.211
13.965	12.706	.213

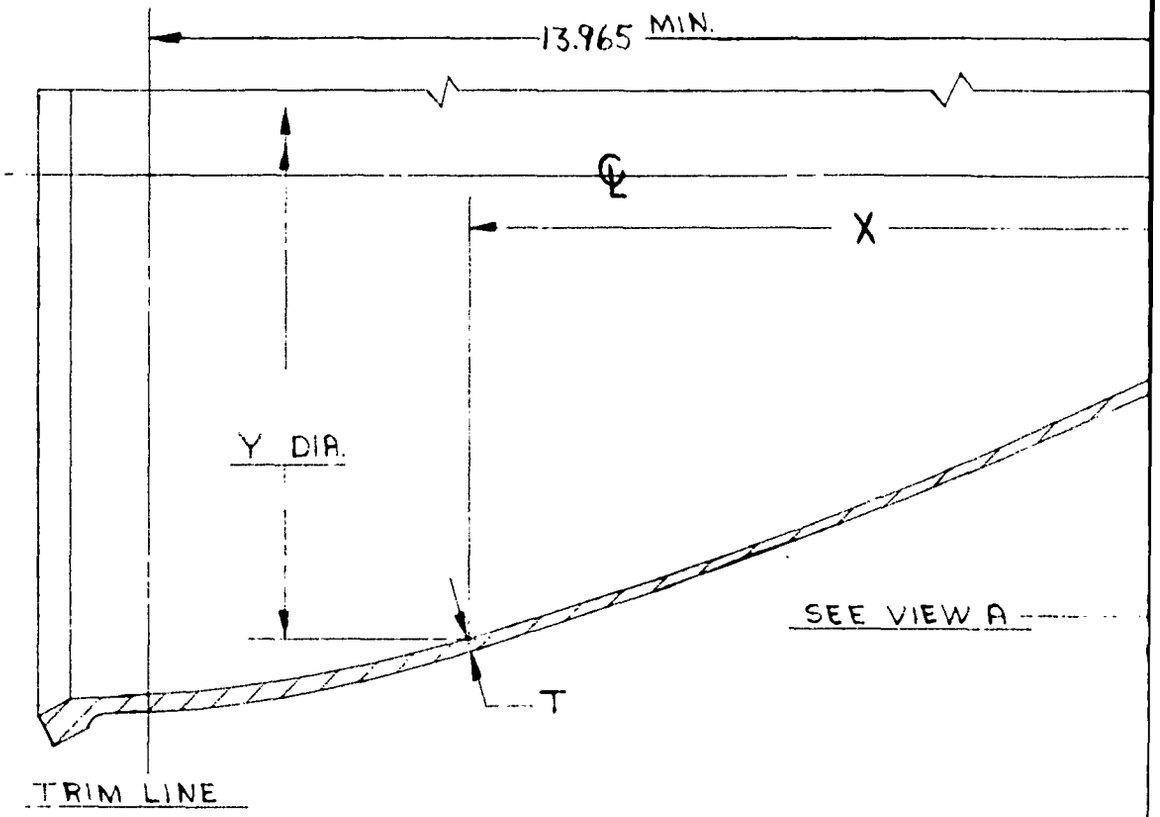

SCALE: HALF SIZE

2.00
TPI

MAT'L: MAGNESIUM ALLOY, MIL-M-26075
CONDITION HK 31A-H24

2

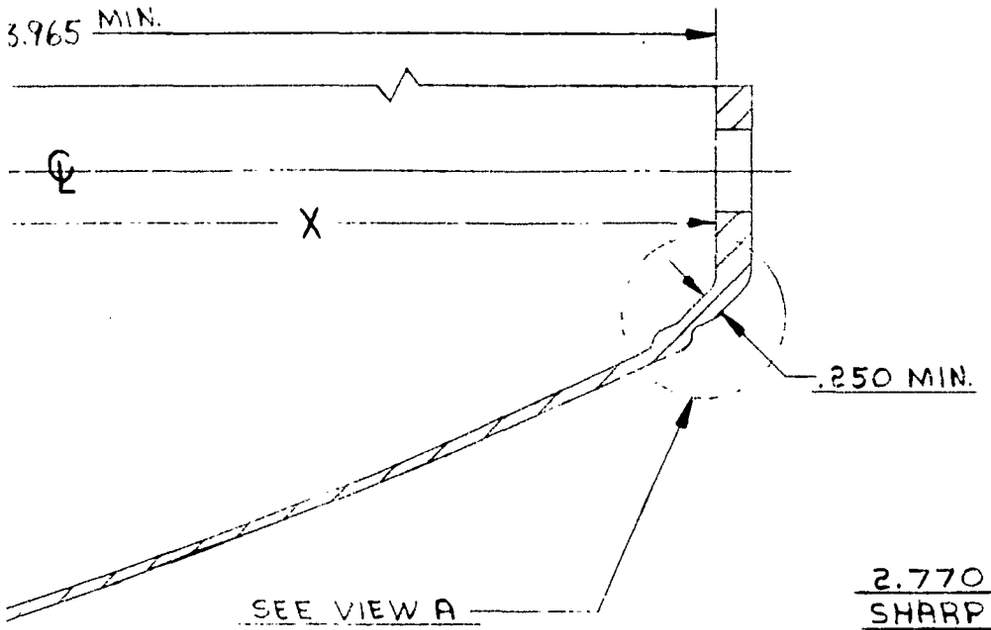

SCALE : HALF SIZE

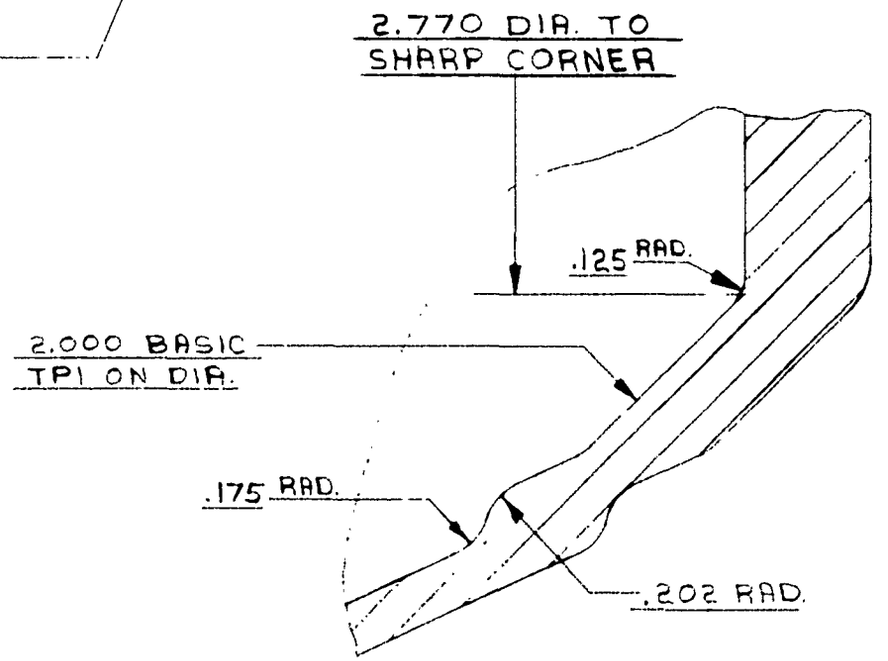

VIEW A
SCALE: 2/1

Y, MIL-M-26075
31F-H24

SECOND OPERATION
FIGURE 9

3

X	Y	THICKNESS-T
.847	4.463	.228
1.068	4.853	.225
1.286	5.232	.223
1.499	5.600	.222
1.710	5.958	.22[illegible]
1.916	6.304	.21[illegible]
2.119	6.640	.217
2.318	6.966	.215
2.513	7.281	.214
2.705	7.587	.212
2.892	7.879	.210
3.075	8.163	.208
3.254	8.436	.206
3.428	8.698	.206
3.608	8.963	.208
3.790	9.227	.210
3.973	9.490	.212
4.159	9.751	.214
4.346	10.010	.216
4.535	10.266	.218
4.725	10.518	.221
4.917	10.767	.223
5.109	11.014	.225
5.303	11.256	.228
5.498	11.493	.230
5.693	11.725	.233
5.888	11.951	.236
6.085	12.173	.239
6.281	12.387	.242
6.477	12.595	.245
6.674	12.796	.248
6.870	12.992	.251
7.066	13.177	.256
7.261	13.350	.262
7.457	13.512	.264
7.656	13.660	.266
7.859	13.792	.267
8.065	13.900	.268
8.276	13.973	.269

MAT

FLA

1

HICKNESS-T
.228
.225
.223
.222
[illegible]
.218
.217
.215
.214
[illegible]
.210
.208
.206
.206
.208
[illegible]
.212
.214
.216
.218
.221
.223
.225
.228
.230
.233
.236
.239
.242
.245
.248
.251
.256
.262
.264
.266
.267
.268
.269

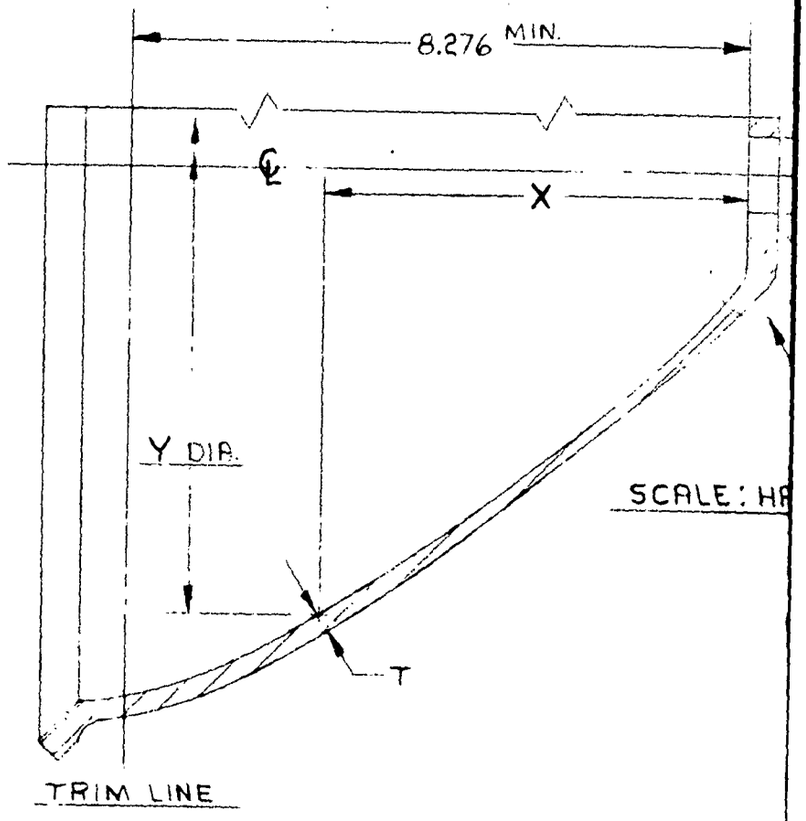

2.000 BASI
TRI ON DIA

MAT'L: MAGNESIUM ALLOY, MIL-M-26075
CONDITION HK31A-H24

FLAT BLANK - .375 THICK × 17" DIA.

2

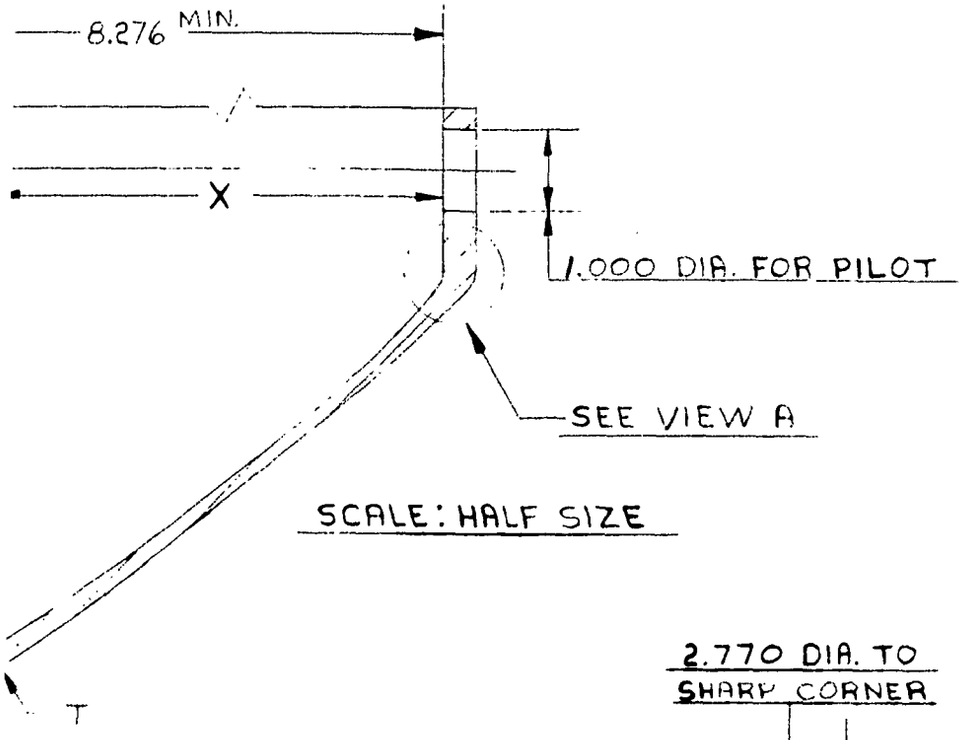

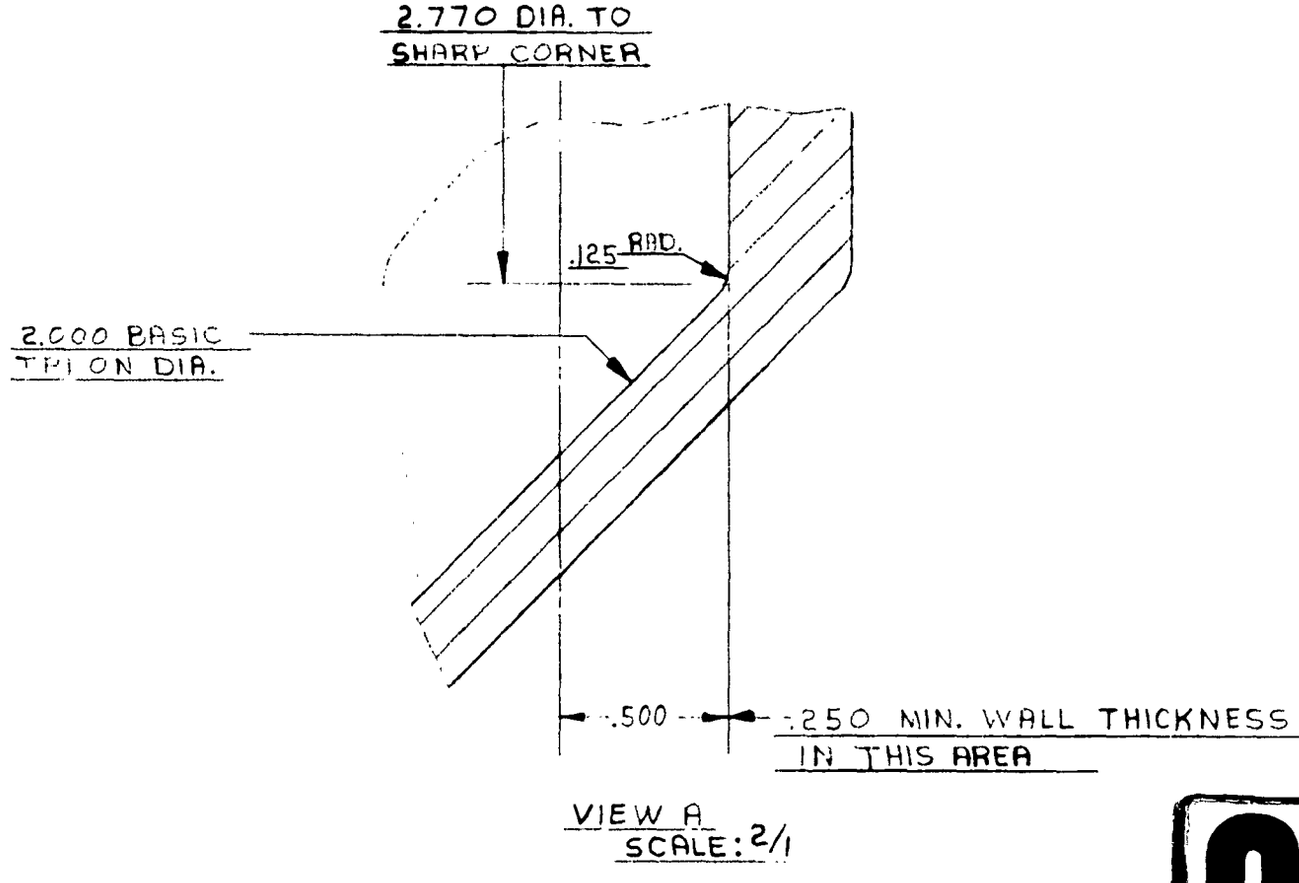

FIRST OPERATION
FIGURE 10

3

5

Once the arbor was restored to a true running condition, it seemed to remain fairly true as long as the spindle was kept rotating. In order to avoid stopping the spindle for more than a few seconds, the procedure for checking the template setting and corresponding roller gap was modified so that only three points were checked with feeler gages, and these checks made as rapidly as possible with the spindle restarted as soon as practical.

Another part from the first test lot of blanks was placed on the arbor and brought to heat as rapidly as possible and the roller feed started. The roller had just contacted the part when the part failed due to hot fractures in an area three inches ahead of the roller. A check of part temperature was made with an electric pyrometer as soon as the spindle could be brought to a stop. The temperature of the part in the area of the fracture was 840°. This excessive heat resulted from use of too large a torch flame in an effort to raise the temperature of the heavy end of the part rapidly.

The arbor was again checked for runout and restored to a true running condition by selective heating and another test part placed on the arbor. The part was brought to operating temperature and the roller started on its working pass. As the roller progressed along the part a bubble appeared very similar to that encountered in the first part run. In addition, as the roller approached a point approximately twelve inches from the small end, a series of wrinkles started developing in the part 180° from the bubble. These wrinkles became progressively worse and extended into the portion of the part ahead of the roller. The roller folded over and flattened several of the wrinkles and, as a result, fractured the part.

Due to the failure of all attempts up to this point to maintain a satisfactory runout condition of the arbor when operated at an elevated temperature, it was decided to investigate the possibility of performing the operation with the arbor at room temperature. The arbor was re-machined at room temperature to re-establish a true running condition and two trials made with parts #14 and #6 from the second lot of blanks. In both cases, the parts fractured in the step in the nose. The parts could not be heated to a suitable temperature due to the chilling effect of the cold arbor.

Further thought was given to the problem of distortion of the arbor when heated to a temperature of 600°. Since the distortion seemed to result from non-uniform heating of the arbor by the internal rods, which could result from variations in wall thickness or from variations in the amount of contact between various rods and the cast surface on the inside of the arbor, it was decided that a more uniform condition could be obtained if the hollow portion of the arbor were filled with some conductive material. After considering several possibilities, steel shot was selected.

The arbor was removed from the spindle, filled with steel shot, and remounted on the spindle. The arbor was brought to temperature by means of the internal rods and allowed to reach a stable temperature. While a runout condition did exist as a result of earlier re-machining at non-uniform heat, repeated checks indicated that the arbor remained stable without any distortion due to unequal heating.

Following the check for stability, plans were made and the set-up revised to again remachine the arbor at operating temperature in order to eliminate the existing runout condition. After all preparations were completed, the arbor was again brought to operating temperature and checked for stability and machining started. Shortly after the remachining cut was started, the temperature of the arbor started dropping rapidly, indicating a loss of power to the internal rods. The cut was allowed to continue to completion, and then the circuit was checked by the plant electrician who reported that the rods were grounded.

The arbor was removed from the spindle and the shot and rods removed from the inside of the arbor. All three rods had burnt through on one side of the arbor at about the middle of their length and some of the steel shot had fused into a solid mass around the burnt ends of the rods. The cause of rod failure was not readily apparent, so it was decided to consult the supplier, but in order to avoid any undue delay in the program, the arbor was refilled with steel shot and work continued with all heating obtained from propane torches.

Parts #3 and #4 were placed on the heated arbor and run. However, Part #3 fractured in the step in the nose, and part #4 fractured just beyond the step.

The only part remaining that could be used for additional work was one of the parts from the first test lot of parts. This part was placed on the arbor and run to full length without fracturing. However, very sharply defined wrinkles formed throughout the part from approximately point #6 to point #30. This wrinkled condition resulted from the non-uniform gap between the roller and arbor.

The problem of rod burn-out was discussed with the supplier, and we were advised that this failure did not result from the use of steel shot to fill the inside of the arbor, but was a result of having the rods too firmly restrained at the ends so as to prevent the ends of the rods from moving as the rods reached operating temperature. Since the ends of the rods could not move as the length increased, the rods bowed in at the center until they touched and burnt out.

Replacement rods were ordered and plans made to change the manner of restricting the ends so as to permit movement.

The results obtained through three operations as given in Appendix B were reviewed to determine the best methods of procedure to be used on another lot of material. This review and a complete report on further work is given in Appendix C.

Following the completion of work as reported in Appendix "C", ending with the failure of a third set of heating rods in the fourth operation in the arbor, a complete review of the situation was made and the following determination made:

1. The feasibility of forming HK31A Magnesium Alloy by a combination of Floturning and spinning has definitely been proved through the first three operations as reported in Appendix "C", provided the workpiece and tooling are maintained at 700°F. as outlined on Page B-28 of Appendix "B".

2. All the problems encountered in the fourth operation were a result of the effect of attempting to maintain a temperature of 700°F. in the arbor. While similar problems might have been expected in the earlier operations, the extreme slenderness ratio of the fourth operation arbor compounded the problems.

3. One attempt was made to solve the tooling problems encountered with elevated temperatures; however, this attempt was unsuccessful.

4. Further work directed toward the solution of elevated temperature tooling problems is not within the scope of the subject contract.

In view of the problems encountered with the fourth operation tooling in accordance with the foregoing determinations, steps were taken to close out the contract.

APPENDIX A

FABRICATION OF AN HK31A MAGNESIUM ALLOY AIRFRAME SKIN

CONTRACT NUMBER: DA-33-008-ORD-2084

The following calculations and dimensions are based on the inside surface of the part. Therefore the co-ordinates obtained are those for the tooling in the operation.

The inside configuration of the fourth operation is that of the finished part as shown on drawing #TA-34-130.

The same unknowns appear in the calculations for each operation, therefore the same symbols are used for these values. A subscript is used with each symbol to indicate the operation to which that symbol applies. (T_4 = thickness in the fourth operation, T_3 = thickness in the third operation, etc.)

The first step is to calculate dimensions that will define the jog in the finished part between station 8.5 and station 10. To locate the intersection of the 2.000 T.P.I. and .410 T.P.I., see the calculations on page A-3. Location of the .175 and .202 radii centers are calculated on page A-4.

To allow the finished part to be trimmed at station 8.5, a new inside bottom, or base for all dimensions parallel to the centerline, will be established at station 8.25.

In the section from the inside bottom to station 10 or Point 0, only Floturn principles are applied, therefore the diameter at any point on the curve and the diameters to the center of the two radii do not change. Calculations for the length of this section for the first, second, and third operations are shown on page A-5.

The following calculations are split into two sections. The first section, from Point 0 to Point 13 (station 10 to station 23), is based entirely on Floturn principles holding the axial thickness equal in all operations. The second section, from Point 13 to Point 38 (station 23 to station 48), is based on a combination of Floturn and spinning principles. This is required because the axial thickness of the finished part is greater than the flat blank thickness in this section.

See page A-6 for an illustration of the Floturn formulas used to calculate the first section. Columns 1 through 22, pages A-16 through A-18, show the chart solutions for this section. Column explanations are given on page A-9 and page A-10.

The third operation curve, for the second section, is calculated using the Floturn formulas illustrated on page A-6. See page A-7 for an illustration of the combination Floturn and spinning formulas used to calculate the second operation, first operation, and flat blank of the second section. We propose to change the axial thickness proportionally through three operations so that the required axial thickness for each increment is obtained in the third operation. To insure that the required amount of material is available for each increment, the volume of any one increment is equal through all operations. Therefore, as the axial thickness decreases, the increment of radius increases for the second and first operations and the flat blank. See page A-8 for an illustration of one increment from a flat blank to the finished part. Columns 22 through 64, pages A-19 through A-24, show the chart solution for this section. Column explanations are given on pages A-11 through A-15.

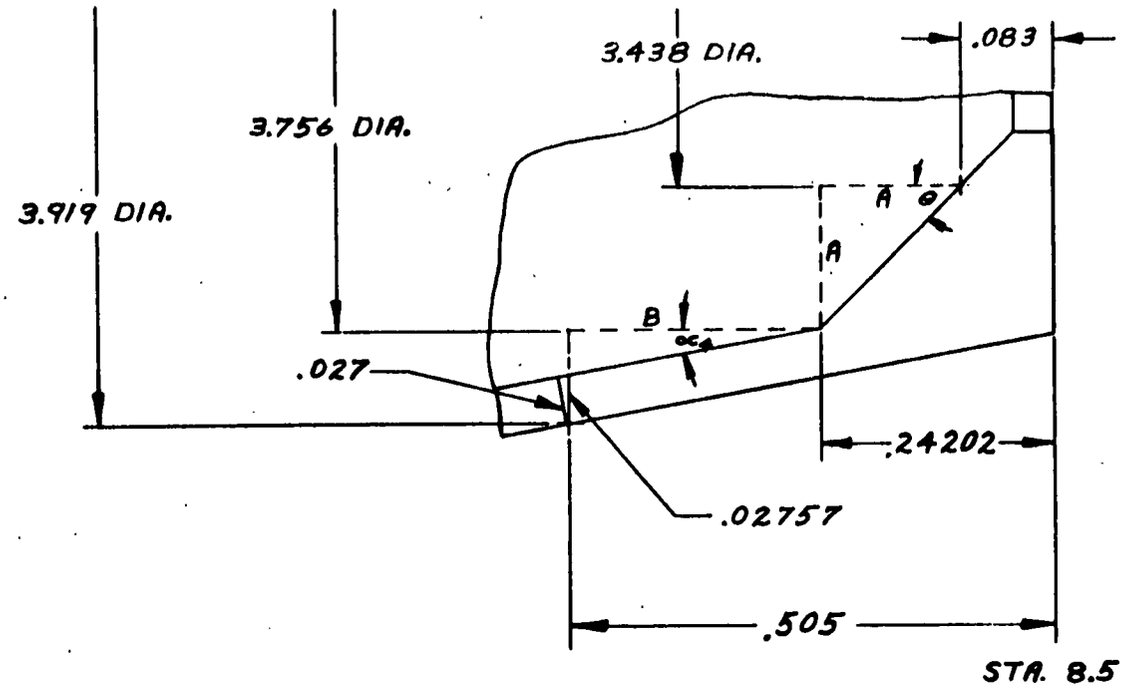

$\tan \alpha_4 = \frac{.4100}{2}$

$\tan \alpha_4 = .205$

$\tan \theta = \frac{2}{2}$

$\tan \theta = 1.000$

$A + B = .505 - .083$

$A + B = .422$

$A = .422 - B$

$B \tan \alpha + A = \frac{3.919 - 3.438}{2} - .02757$

$.205\ B + A = .21293$

$.205\ B + .422 - B = .21293$

$.795 B = .20907$

$\underline{B = .26298}$

$\underline{A = .15902}$

A-4

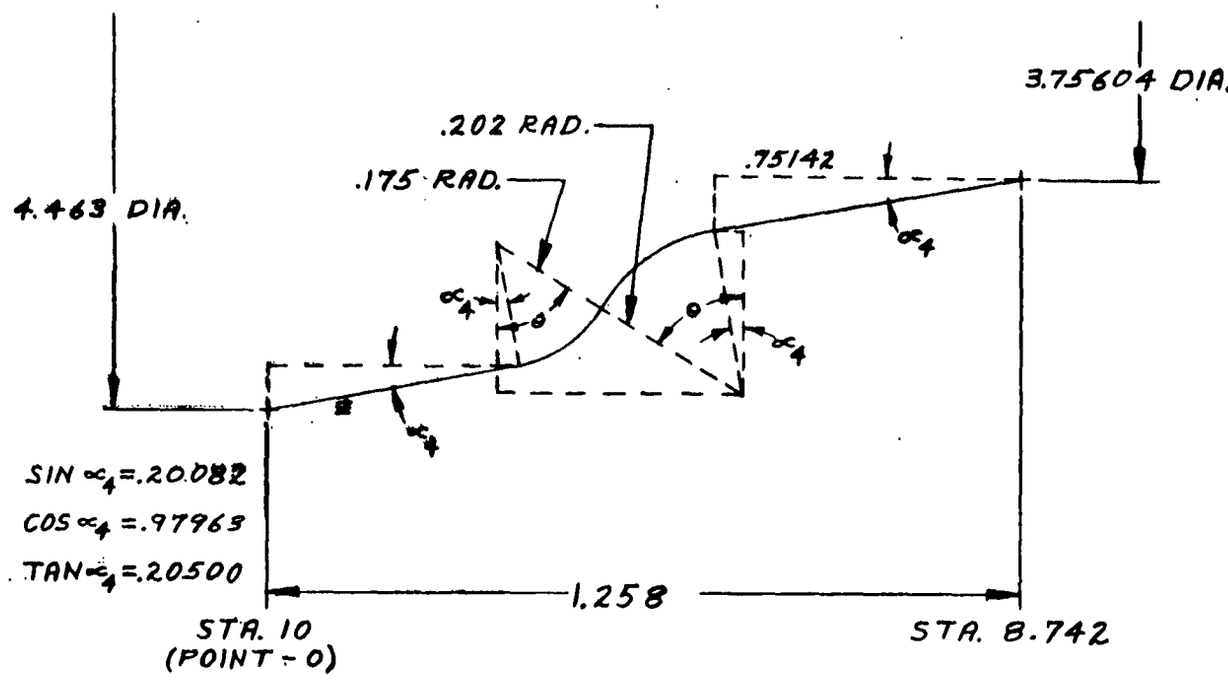

$$z \cos\alpha_4 - .175 \sin\alpha_4 + .175 \sin\theta + .202 \sin\theta - .202 \sin\alpha_4 + .75142 = 1.258$$

$$.97963\, z - .03514 + .175 \sin\theta + .202 \sin\theta - .04057 + .75142 = 1.258$$

$$.97963\, z = .58229 - .377 \sin\theta$$

$$z = .59789 - .38484 \sin\theta$$

$$z \sin\alpha_4 + .175 \cos\alpha_4 - .175 \cos\theta - .202 \cos\theta + .202 \cos\alpha_4 + .75142 \tan\alpha_4 = .35348$$

$$.20082\, z + .17144 - .175 \cos\theta - .202 \cos\theta + .19789 + .15404 = .35348$$

$$.20082\, z = .377 \cos\theta - .16989$$

$$z = 1.87730 \cos\theta - .84598$$

$$.59789 - .38484 \sin\theta = 1.87730 \cos\theta - .84598$$

$$.38484 \sin\theta = 1.44387 - 1.87730 \cos\theta$$

$$\sin\theta = 3.75187 - 4.87813 \cos\theta$$

$$1 - \cos^2\theta = 14.07653 - 36.60422 \cos\theta + 23.79615 \cos^2\theta$$

$$24.79615 \cos^2\theta - 36.60422 \cos\theta + 13.07653 = 0$$

$$\cos^2\theta - 1.47621 \cos\theta + .52736 = 0$$

$$\cos\theta = \frac{1.47621 \pm \sqrt{1.47621^2 - 4(.52736)}}{2}$$

$$\cos\theta = \frac{1.47621 \pm .26411}{2}$$

$\underline{\cos\theta = .60605}$ $\underline{\sin\theta = .79543}$ $\underline{\theta = 52^\circ\, 41'\, 16''}$

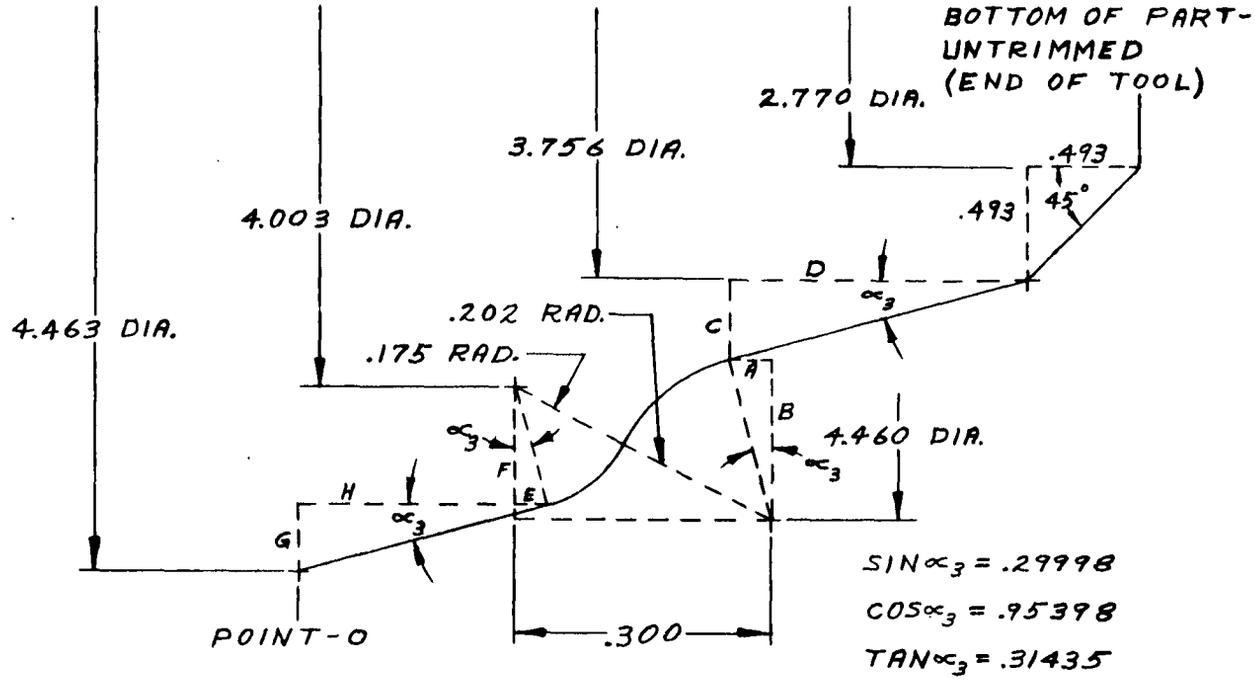

CALCULATIONS FOR THIRD OPERATION

$A = .202(.29998) = .061$ $\qquad$ $E = .175(.29998) = .053$

$B = .202(.95398) = .193$ $\qquad$ $F = .175(.95398) = .167$

$C = .352 - B = .159$ $\qquad$ $G = .230 - F = .063$

$D = \frac{C}{.31435} = .506$ $\qquad$ $H = \frac{G}{.31435} = .200$

$\Delta X_3 = .493 + D - A + .300 - E + H = 1.385$ = END OF TOOL TO POINT-O (THIRD OPERATION)

CALCULATIONS FOR SECOND OPERATION

$SIN\alpha_2 = .44812$ $\qquad$ $COS\alpha_2 = .89397$ $\qquad$ $TAN\alpha_2 = .50127$

$A = .202(.44812) = .091$ $\qquad$ $E = .175(.44812) = .078$

$B = .202(.89397) = .181$ $\qquad$ $F = .175(.89397) = .156$

$C = .352 - B = .171$ $\qquad$ $G = .230 - F = .074$

$D = \frac{C}{.50127} = .341$ $\qquad$ $H = \frac{G}{.50127} = .146$

$\Delta X_2 = .493 + D - A + .300 - E + H = 1.111$ = END OF TOOL TO POINT-O (SECOND OPERATION)

CALCULATIONS FOR FIRST OPERATION

A 45° ANGLE WILL BE FLOTURNED FROM THE END OF TOOL (2.770 DIA.) TO POINT-O (4.463 DIA.)

$\Delta X_1 = \frac{4.463 - 2.770}{2} = .8465$ = END OF TOOL TO POINT-O (FIRST OPERATION)

ILLUSTRATION OF THE FLOTURN FORMULAS APPLIED TO ANY ONE INCREMENT THROUGH ONE FLOTURN OPERATION

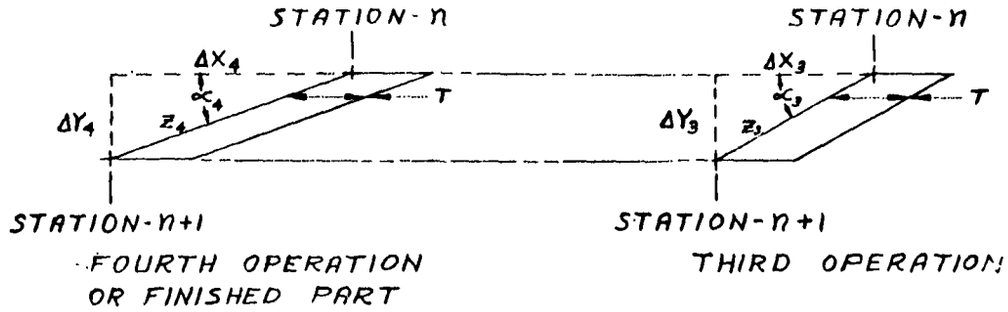

STATION Nº : COORDINATES AND WALL THICKNESS AT EACH STATION GIVEN ON FINISHED PART DRAWING.

ΔY_4 : INCREMENT OR RADIUS CHANGE BETWEEN STATIONS - FOURTH OPERATION.

ΔX_4 : INCREMENT OR CHANGE IN LENGTH BETWEEN STATIONS - FOURTH OPERATION.

$Z_4 = \sqrt{\Delta Y_4^2 + \Delta X_4^2}$: LENGTH OF HYPOTENUSE FOR EACH INCREMENT - FOURTH OPERATION.

$K = \sqrt[4]{\sin \alpha_4}$: EQUAL PERCENT OF REDUCTION IN EACH OF FOUR OPERATIONS - FLAT BLANK TO THE FINISHED PART. - CONSTANT IN ALL OPERATIONS FOR ANY ONE INCREMENT.

$Z_3 = K \times Z_4$: LENGTH OF HYPOTENUSE FOR EACH INCREMENT - THIRD OPERATION.

$\Delta Y_3 = \Delta Y_4$: THE RADIUS AT ANY POINT DOES NOT CHANGE FROM ONE OPERATION TO ANOTHER.

$\Delta X_3 = \sqrt{Z_3^2 - \Delta Y_3^2}$: INCREMENT OR CHANGE IN LENGTH BETWEEN STATIONS - THIRD OPERATION

$X_3 =$ SUM ΔX_3 : THIS DIMENSION & THE CORRESPONDING Y_3 DIMENSION GIVES A COMPLETE SET OF COORDINATES FOR THE THIRD OPERATION CURVE.

THESE FORMULAS ARE APPLIED TO EACH INCREMENT THROUGH THE ENTIRE LENGTH OF THE PART WHERE THE FLOTURN PRINCIPALS APPLY. TO GENERATE THE THIRD OPERATION CURVE PLOT X_3 AND CORRESPONDING Y_3. THE SAME PROCEDURE IS REPEATED FOR THE SECOND & FIRST OPERATION CURVES THROUGH STATION 23.

ILLUSTRATION OF THE FORMULAS USED IN THE AREA THAT REQUIRES A COMBINATION OF FLOTURN AND SPINNING PRINCIPALS, APPLIED TO ONE INCREMENT THROUGH ONE OPERATION.

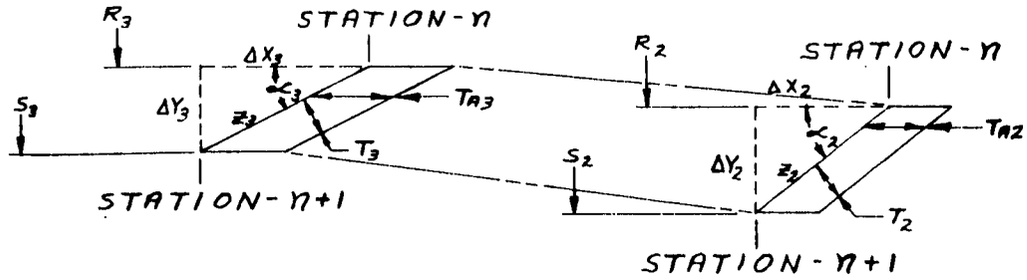

THIRD OPERATION SECOND OPERATION

T = FLAT BLANK THICKNESS

$R_T = \sqrt[3]{\frac{T_{A3}}{T}}$ = RATIO REQUIRED TO CHANGE THE AXIAL THICKNESS EQUALLY THROUGH THREE OPERATIONS FROM THE ASSUMED FLAT BLANK THICKNESS OF .340 TO THE REQUIRED AXIAL THICKNESS $T_{A4} = T_{A3}$

$T_{A2} = \frac{T_{A3}}{R_T}$ = AXIAL THICKNESS AT EACH INCREMENT

$T_2 = T_{A2} \times \sin \alpha_2$ = WALL THICKNESS AT EACH INCREMENT

R_3 = RADIUS AT STATION-n = Y_3

S_3 = RADIUS AT STATION-n+1

R_2 = RADIUS AT STATION-n = S_2 FOR PREVIOUS INCREMENT = Y_2

$S_2 = \sqrt{R_2^2 + (S_3^2 - R_3^2) R_T}$ = RADIUS AT STATION-n+1 = R_2 FOR NEXT INCREMENT

$R_R = \sqrt[3]{\frac{T_3}{T_{A3}}}$ = RATIO REQUIRED TO GIVE EQUAL PERCENT REDUCTION THROUGH THREE FLOTURN OPERATIONS

$\frac{\Delta Y_2}{\Delta Y_3}$ = RATIO TO COMPENSATE FOR LARGER RADIUS AT EACH SUCCESSIVE STATION DUE TO SPINNING ACTION

$Z_2 = Z_3 (R_R) \frac{\Delta Y_2}{\Delta Y_3}$ = LENGTH OF HYPOTENUSE FOR EACH INCREMENT

$\Delta X_2 = \sqrt{Z_2^2 - \Delta Y_2^2}$ = INCREMENT OR CHANGE IN LENGTH BETWEEN STATIONS

X_2 = SUM ΔX_2 = LENGTH DIMENSION FOR SECOND OPERATION CURVE STATION 23 TO STATION 48

TO GENERATE THE SECOND & FIRST OPERATION CURVES FROM STATION 23 TO STATION 48, PLOT X_2 AND X_1 WITH THEIR CORRESPONDING Y_2 AND Y_1 DIMENSIONS

ILLUSTRATION OF ONE INCREMENT FROM FLAT BLANK THROUGH THE FOURTH OPERATION SHOWING GRAPHICALLY LETTER DESIGNATIONS FOR THE FORMULA BELOW AND THE FOLLOWING CHART SOLUTION FROM POINT-13 TO POINT-38

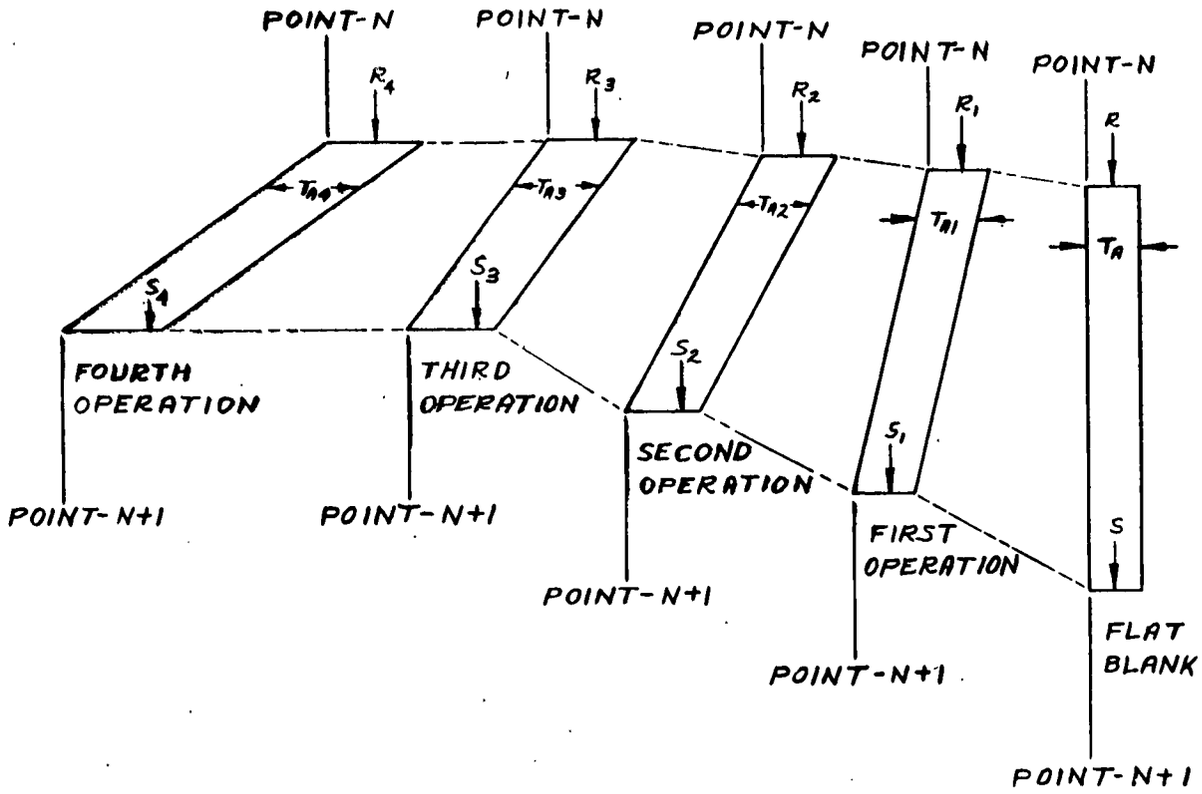

THE FORMULA DERIVED BELOW IS USED TO CALCULATE THE RADII (R & S) OF EACH INCREMENT FOR THE SECOND OPERATION, FIRST OPERATION AND FLAT BLANK FROM POINT-13 TO POINT-38.

VOLUME OF ONE INCREMENT THROUGH ALL OPERATIONS IS EQUAL. THE AXIAL THICKNESS CHANGES FROM THE BLANK TO THE THIRD OPERATION. AXIAL THICKNESS IN THE THIRD AND FOURTH OPERATIONS ARE EQUAL. $T_{A4} = T_{A3}$ $R_4 = R_3$ $S_4 = S_3$

$$V = \pi (S_4^2 - R_4^2) T_{A4} = \pi (S_3^2 - R_3^2) T_{A3} = \pi (S_2^2 - R_2^2) T_{A2} = \pi (S_1^2 - R_1^2) T_{A1} = \pi (S^2 - R^2) T_A$$

$$(S_4^2 - R_4^2) T_{A4} = (S_2^2 - R_2^2) T_{A2}$$

$$S_2^2 - R_2^2 = (S_4^2 - R_4^2) \frac{T_{A4}}{T_{A2}} = (S_4^2 - R_4^2) R_T$$

$$S_2^2 = R_2^2 + (S_4^2 - R_4^2) R_T$$

$$S_1^2 = R_1^2 + (S_4^2 - R_4^2) R_T^2$$

$$S^2 = R^2 + (S_4^2 - R_4^2) R_T^3$$

EXPLANATION OF COLUMN NUMBERS FOR THE FOLLOWING CHART SOLUTIONS

Column No.

(1) Point Number: Reference number to ease tracing calculations from one page to another.

(2) Station Number: Given on Drawing #TA-34-130.

(3) X_4 : Length dimension from inside bottom of part to each co-ordinate.

(4) $Y_4 = \frac{I.D.}{2}$: Radius at each point.

(5) ΔX_4 : Increment of length between points.

(6) ΔY_4 : Increment of radius between points.

(7) $Z_4 = \sqrt{\Delta X_4^2 + \Delta Y_4^2} = \sqrt{(5)^2 + (6)^2}$
Length of hypotenuse for incremental triangle.

(8) $SIN\ \alpha_4 = \frac{\Delta Y_4}{Z_4} = \frac{(6)}{(7)}$

Sine of angle of the incremental triangle. Sine of half the included angle of each conical increment of the part.

(9) $K = \sqrt[4]{SIN\ \alpha_4} = \sqrt[4]{(8)}$
Compliment of the percent of reduction for each operation required to Floturn a flat blank to the finished angle, utilizing four Floturn operations with an equal percent reduction in each operation.

(10) $Z_3 = K \times Z_4 = (9) \times (7)$
Length of hypotenuse for incremental triangle.

(11) $\Delta X_3 = \sqrt{Z_3^2 - \Delta Y_4^2} = \sqrt{(10) - (6)}$
Increment of length between points.

EXPLANATION OF COLUMN NUMBERS FOR THE FOLLOWING CHART SOLUTIONS

Column No.

(12) $X_3 = SUM\ \Delta X_3 = SUM$ (11)
Length dimension from inside bottom to each point for third operation curve. The first value, at point 0, is taken from the calculations on page A-5. To plot curve use X_3 and corresponding Y_4.

(13) $Z_2 = K \times Z_3 =$ (9) $\times$ (10)
Length of hypotenuse for incremental triangle.

(14) $\Delta X_2 = \sqrt{Z_2^2 - \Delta Y_4^2} = \sqrt{(13)^2\ (6)^2}$
Increment of length between points.

(15) $X_2 = SUM\ \Delta X_2 = SUM$ (14)
Length dimension from inside bottom to each point for second operation curve. The first value, at point 0, is taken from the calculations on page A-5. To plot curve use X_2 and corresponding Y_4.

(16) $Z_1 = K \times Z_2 =$ (9) $\times$ (13)
Length of hypotenuse for incremental triangle.

(17) $\Delta X_1 = \sqrt{Z_1^2 - \Delta Y_4^2} = \sqrt{(16)^2 - (6)^2}$
Increment of length between points.

(18) $X_1 = SUM\ \Delta X_1 = SUM$ (17)
Length dimension from inside bottom to each point for first operation curve. The first value, at point 0, is taken from the calculations on page A-5. To plot curve use X_1 and corresponding Y_4.

(19) $T_1 = K \times .340 =$ (9) $\times .340$
Radial wall thickness for each increment.

(20) $T_2 = K \times T_1 =$ (9) $\times$ (19)
Radial wall thickness for each increment.

(21) $T_3 = K \times T_2 =$ (9) $\times$ (20)
Radial wall thickness for each increment.

(22) $T_4 = K \times T_3 =$ (9) $\times$ (22)
Radial wall thickness for each increment.

EXPLANATION OF COLUMN NUMBERS FOR THE FOLLOWING CHART SOLUTIONS

Column No.

(23) Point Number : Same explanation Column (1).

(24) Station Number: Same explanation Column (2).

(25) X_4 : Same explanation Column (3).

(26) $Y_4 = \frac{I.D.}{2}$: Same explanation Column (4).

(27) ΔX_4 : Same explanation Column (5).

(28) ΔY_4 : Same explanation Column (6).

(29) $Z_4 = \sqrt{\Delta X_4^2 + \Delta Y_4^2} = \sqrt{(27)^2 + (28)^2}$
Same explanation Column (7).

(30) $SIN\,\alpha_4 = \frac{\Delta Y_4}{Z_4} = \frac{(28)}{(29)}$
Same explanation Column (8)

(31) T_4 : Radial wall thickness (high limit) given on Drawing #TA-34-130.

(32) $T_{A4} = \frac{T_4}{SIN\,\alpha_4} = \frac{(31)}{(30)}$: Axial wall thickness.
Wall thickness for each increment equal for third and fourth operations. Thickness in increment taken as that at large end of increment.

(33) $K = \sqrt[4]{SIN\,\alpha_4} = \sqrt[4]{(30)}$
Compliment of the percent of reduction, for each operation, required to Floturn a flat blank to the finished angle, utilizing four Floturn operations with equal percent reduction in each operation. (Used in the second section to compute the third operation curve only)
*K = .40000 minimum - holding maximum percent reduction in wall thickness to 60%.

EXPLANATION OF COLUMN NUMBERS FOR THE FOLLOWING CHART SOLUTIONS

Column No.

(34) $Z_3 = K \times Z_4 = (33) \times (29)$
Same explanation Column (10)

(35) $\Delta X_3 = \sqrt{Z_3^2 - \Delta Y_4^2} = \sqrt{(34)^2 - (28)^2}$
Same explanation Column (11)

(36) $X_3 = SUM\ \Delta X_3 = SUM\ (35)$
Length dimension from inside bottom to each point for third operation curve. The first value at point 13 is taken from point 13 in Column

(37) $SIN\ \alpha_3 = \frac{\Delta Y_4}{Z_3} = \frac{(28)}{(34)}$
Sine of angle of the incremental triangle. Sine of half the included angle of each conical increment of the part.

(38) $T_3 = T_{n4} \times SIN\ \alpha_3 = (32) \times (37)$
Radial wall thickness for each increment. Axial wall thickness in the fourth operation equals the axial wall thickness in the third operation.

(39) $R_T = \sqrt[3]{\frac{T_{n4}}{.340}} = \sqrt[3]{\frac{(32)}{.340}}$
Ratio required to change the axial thickness equally through three operations from the assumed flat blank thickness of .340 to the required axial thickness in the third operation.

(40) R_T^2

(41) R_T^3

(42) R_2 : Radius at small end of each increment. (See page A-8 for illustration) $R_2 = Y_4$ at point 13 for the increment from point 13 to point 14. R_2 at each successive increment equals S_2 from the previous increment.

(43) R_4 and S_4 are taken from Y_4 (Column (26)). See illustration on page A-8.

EXPLANATION OF COLUMN NUMBERS FOR THE FOLLOWING CHART SOLUTIONS

Column No.

(44) $S_2 = \sqrt{R_2^2 + (S_4^2 - R_4^2) R_T} = \sqrt{(42) + (43) \times (39)}$
Radius at large end of each increment. (See page A-8 for illustration, and derivation of equation).

(45) Y_2 : Radius at each point. For example Y_2 at point 14 equals S_2 for increment from point 13 to point 14.

(46) ΔY_2 : Increment of radius between points.

(47) $R_R = SIN\ \alpha_1 = \sqrt[3]{\frac{T_3}{T_{A4}}} = \sqrt[3]{\frac{(38)}{(32)}}$
Ratio to give equal percent reduction in wall thickness for three operations, and the sine of angle of the incremental triangle.

(48) $Z_2 = Z_3 \times R_R \times \frac{\Delta Y_2}{\Delta Y_4} = (34) \times (47) \times \frac{(46)}{(28)}$
Length of hypotenuse for incremental triangle.

$\frac{\Delta Y_2}{\Delta Y_3} =$: Ratio to compensate for change in radius from third operation to second operation.

(49) $\Delta X_2 = \sqrt{Z_2^2 - \Delta Y_2^2} = \sqrt{(48)^2 - (46)^2}$
Increment of length between points.

(50) $X_2 = SUM\ \Delta X_2 = SUM\ (49)$
Length dimension from inside bottom to each point for second operation curve. The first value at point 0, is taken from the calculations on page A-5. To plot curve use X_2 and corresponding Y_2.

(51) $T_{A2} = \frac{T_{A4}}{R_T} = \frac{(32)}{(39)}$
Axial wall thickness for each increment.

(52) $SIN\ \alpha_2 = R_R^2 = \frac{\Delta Y_2}{Z_2} = \frac{(46)}{(48)}$
Sine of half the included angle.

EXPLANATION OF COLUMN NUMBERS FOR THE FOLLOWING CHART SOLUTIONS

Column No.

(53) $T_2 = T_{A2} \times SIN\ \alpha_2 = (51) \times (52)$
Radial wall thickness for each increment.

(54) R_1 : Radius at small end of each increment. (See page A-8 for illustration) $R_1 = Y_4$ at point 13 for the increment from point 13 to point 14. R_1 at each successive increment equals S_1 from the previous increment.

(55) $S_1 = \sqrt{R_1^2 + (S_4^2 - R_4^2) R_T^2} = \sqrt{(54) + (43) \times (40)}$
Radius at large end of each increment. (See page A-8 for illustration, and derivation of equation).

(56) Y_1 : Radius at each point. For example Y_1 at point 14 equals S_2 for increment from point 13 to point 14.

(57) ΔY_1 : Increment of radius between points.

(58) $Z_1 = Z_2 \times R_R \times \frac{\Delta Y_1}{\Delta Y} = (48) \times (47) \times \frac{(57)}{(46)}$
Length of hypotenuse for incremental triangle.

$\frac{\Delta Y_1}{\Delta Y_2} =$: Ratio to compensate for change in radius from second operation to first operation.

(59) $\Delta X_1 = \sqrt{Z_1^2 - \Delta Y_1^2} = \sqrt{(58)^2 - (57)^2}$
Increment of length between points.

(60) X_1 : Length dimension from inside bottom to each point for first operation curve. The first value at point 0, is taken from the calculations on page A-5. To plot curve use X_1 and corresponding Y_1.

(61) $T_{A1} = \frac{T_{A2}}{R_T} = \frac{(51)}{(39)}$
Axial wall thickness for each increment.

(62) $T_1 = T_{A1} \times SIN\ \alpha_1 = (61) \times (47)$
Radial wall thickness for each increment.

EXPLANATION OF COLUMN NUMBERS FOR THE FOLLOWING CHART SOLUTIONS

Column No.

(63) R : Radius at small end of each increment. (See page A-8 for illustration). R = Y_4 at point 13 for the increment from point 13 to point 14. R at each successive increment equals S from the previous increment.

(64) $S = \sqrt{R^2 + (S_4^2 - R_4^2) R_T^2} = \sqrt{(63)^2 + (43) \times (41)^2}$
Radius at large end of each increment. (See page A-8 for illustration). S for the increment from point 37 to point 38 equals Y at point 38. This radius (Y) is the large radius of the flat blank required to Floturn the part to point 38. To allow trim stock at the large end of the part, a 17" diameter flat blank will be used.

①	②	③	④	⑤	⑥	⑦	⑧	⑨	⑩
			$\frac{I.D.}{2}$			$\sqrt{\Delta X_4^2+\Delta Y_4^2}$	$\frac{\Delta Y_4}{Z_4}$	$\sqrt[4]{SIN\,\alpha_4}$	$K \times Z_4$
Point No.	Sta. No.	X_4	Y_4	ΔX_4	ΔY_4	Z_4	$SIN\,\alpha_4$	K	Z_3
0	10	1.75	2.2315						
				1	.1950	1.01884	.19139	.66142	.67388
1	11	2.75	2.4265						
				1	.1895	1.01780	.18619	.65688	.66857
2	12	3.75	2.6160						
				1	.1840	1.01679	.18096	.65222	.66317
3	13	4.75	2.8000						
				1	.1790	1.01589	.17620	.64789	.65818
4	14	5.75	2.9790						
				1	.1730	1.01485	.17047	.64256	.65210
5	15	6.75	3.1520						
				1	.1680	1.01401	.16568	.63800	.64694
6	16	7.75	3.3200						
				1	.1630	1.01320	.16088	.63332	.64168
7	17	8.75	3.4830						
				1	.1575	1.01233	.15558	.62804	.63578
8	18	9.75	3.6405						
				1	.1530	1.01164	.15124	.62362	.63088
9	19	10.75	3.7935						
				1	.1460	1.01060	.14447	.61652	.62306
10	20	11.75	3.9395						
				1	.1420	1.01003	.14059	.61233	.61847
11	21	12.75	4.0815						
				1	.1365	1.00927	.13525	.60644	.61206
12	22	13.75	4.2180						
				1	.1310	1.00854	.12989	.60034	.60547
13	23	14.75	4.3490						

(1)	(11)	(12)	(13)	(14)	(15)	(16)	(17)	(18)
	$\sqrt{Z_3^2-\Delta Y_4^2}$		$K \times Z_3$	$\sqrt{Z_2^2-\Delta Y_4^2}$		$K \times Z_2$	$\sqrt{Z_1^2-\Delta Y_4^2}$	
Point No.	ΔX_3	X_3	Z_2	ΔX_2	X_2	Z_1	ΔX_1	X_1
0		1.385			1.111			.847
	.64505		.44572	.40080		.29481	.22111	
1		2.030			1.512			1.068
	.64115		.43917	.39618		.28848	.21751	
2		2.671			1.908			1.286
	.63713		.43253	.39144		.28210	.21383	
3		3.308			2.299			1.499
	.63337		.42643	.38704		.27628	.21045	
4		3.942			2.686			1.710
	.62873		.41901	.38163		.26924	.20630	
5		4.570			3.068			1.916
	.62475		.41275	.37701		.26333	.20278	
6		5.195			3.445			2.119
	.62063		.40639	.37227		.25737	.19917	
7		5.816			3.817			2.318
	.61596		.39930	.36693		.25078	.19515	
8		6.432			4.184			2.513
	.61205		.39343	.36246		.24535	.19180	
9		7.044			4.547			2.705
	.60571		.38413	.35530		.23682	.18646	
10		7.650			4.902			2.892
	.60195		.37871	.35108		.23190	.18334	
11		8.251			5.253			3.075
	.59664		.37118	.34517		.22510	.17899	
12		8.848			5.598			3.254
	.59113		.36349	.33906		.21822	.17453	
13		9.439			5.937			3.428

(1)	(19)	(20)	(21)	(22)
	$K \times .340$	$K \times T_1$	$K \times T_2$	$K \times T_3$
Point No.	T_1	T_2	T_3	T_4
0				
	.225	.149	.098	.065
1				
	.223	.147	.096	.063
2				
	.222	.145	.094	.061
3				
	.220	.143	.092	.060
4				
	.218	.140	.090	.058
5				
	.217	.138	.088	.056
6				
	.215	.136	.086	.055
7				
	.214	.134	.084	.053
8				
	.212	.132	.082	.051
9				
	.210	.129	.080	.049
10				
	.208	.127	.078	.048
11				
	.206	.125	.076	.046
12				
	.206	.125	.076	.044
13				

(23)	(24)	(25)	(26)	(27)	(28)	(29)	(30)
			$\frac{I.D.}{2}$			$\sqrt{\Delta X_4^2+\Delta Y_4^2}$	$\frac{\Delta Y_4}{Z_4}$
Point No.	Sta. No.	X_4	Y_4	ΔX_4	ΔY_4	Z_4	$SIN\,\alpha_4$
13	23	14.75	4.3490				
				1	.1250	1.00778	.12404
14	24	15.75	4.4740				
				1	.1210	1.00729	.12012
15	25	16.75	4.5950				
				1	.1150	1.00659	.11425
16	26	17.75	4.7100				
				1	.1105	1.00609	.10983
17	27	18.75	4.8205				
				1	.1050	1.00550	.10443
18	28	19.75	4.9255				
				1	.0990	1.00489	.09852
19	29	20.75	5.0245				
				1	.0940	1.00441	.09359
20	30	21.75	5.1185				
				1	.0900	1.00404	.08964
21	31	22.75	5.2085				
				1	.0835	1.00348	.08321
22	32	23.75	5.2920				
				1	.0790	1.00312	.07875
23	33	24.75	5.3710				
				1	.0740	1.00273	.07380
24	34	25.75	5.4450				
				1	.0680	1.00231	.06784
25	35	26.75	5.5130				
				1	.0630	1.00198	.06288
26	36	27.75	5.5760				
				1	.0585	1.00171	.05840
27	37	28.75	5.6345				
				1	.0530	1.00140	.05293
28	38	29.75	5.6875				
				1	.0480	1.00115	.04794
29	39	30.75	5.7355				
				1	.0430	1.00092	.04296
30	40	31.75	5.7785				
				1	.0395	1.00078	.03947
31	41	32.75	5.8180				
				1	.0335	1.00056	.03348
32	42	33.75	5.8515				
				1	.0270	1.00036	.02699
33	43	34.75	5.8785				
				1	.0220	1.00024	.02199
34	44	35.75	5.9005				
				1	.0170	1.00014	.01700
35	45	36.75	5.9175				
				1	.0120	1.00007	.01200
36	46	37.75	5.9295				
				1	.0065	1.00002	.00650
37	47	38.75	5.9360				
				1	.0020	1.00000	.00200
38	48	39.75	5.9380				

A-20

(23)	(31)	(32)	(33)	(34)	(35)	(36)	(37)
		$\frac{T_4}{SIN\,\alpha_4}$	$\sqrt[4]{SIN\,\alpha_4}$	$K \times Z_4$	$\sqrt{Z_3^2 - \Delta Y_4^2}$		$\frac{\Delta Y_4}{Z_3}$
Point No.	T_4	T_{A4}	K	Z_3	ΔX_3	X_3	$SIN\,\alpha_3$
13	.0451					9.439	
		.37085	.59346	.59808	.58481		.20900
14	.0460					10.024	
		.39044	.58871	.59300	.58052		.20405
15	.0469					10.605	
		.41838	.58139	.58522	.57381		.19651
16	.0478					11.178	
		.44341	.57568	.57919	.56855		.19078
17	.0487					11.747	
		.47496	.56847	.57160	.56187		.18369
18	.0496					12.309	
		.51259	.56025	.56299	.55422		.17585
19	.0505					12.863	
		.54920	.55310	.55554	.54753		.16920
20	.0514					13.411	
		.58344	.54717	.54938	.54196		.16382
21	.0523					13.953	
		.63935	.53709	.53896	.53245		.15493
22	.0532					14.485	
		.68698	.52974	.53139	.52548		.14867
23	.0541					15.011	
		.74526	.52121	.52263	.51736		.14159
24	.0550					15.528	
		.82440	.51035	.51153	.50699		.13293
25	.0559					16.035	
		.90331	.50076	.50175	.49778		.12556
26	.0568					16.533	
		.98801	.49159	.49243	.48894		.11880
27	.0577					17.022	
		1.10712	.47965	.48032	.47739		.11034
28	.0586					17.499	
		1.24113	.46792	.46846	.46599		.10246
29	.0595					17.965	
		1.40596	.45527	.45569	.45366		.09436
30	.0604					18.419	
		1.55308	.44572	.44607	.44432		.08855
31	.0613					18.863	
		1.85783	.42776	.42800	.42669		.07827
32	.0622					19.290	
		2.33790	.40532	.40547	.40457		.06659
33	.0631					19.694	
		2.91041	.40000*	.40010	.39949		.05499
34	.0640					20.094	
		3.81765	.40000*	.40006	.39970		.04249
35	.0649					20.493	
		5.48333	.40000*	.40003	.39985		.03000
36	.0658					20.893	
		10.26154	.40000*	.40001	.39996		.01625
37	.0667					21.293	
		33.80000	.40000*	.40000	.39999		.00500
38	.0676					21.693	

(23)	(38)	(37)	(40)	(41)	(42)	(43)	(44)
	$T_{A4}(\sin\alpha_3)$	$\sqrt[3]{\frac{T_{A4}}{.340}}$					$\sqrt{R_2^2+(S_4^2-R_4^2)R_T}$
Point No.	T_3	R_T	R_T^2	R_T^3	R_2	$S_4^2-R_4^2$	S_2
13							
	.07751	1.0295	1.05987	1.09114	4.34900	1.10288	4.47764
14							
	.07967	1.0471	1.09642	1.14806	4.47764	1.09735	4.60416
15							
	.08222	1.0718	1.14876	1.23124	4.60416	1.07008	4.72707
16							
	.08459	1.0925	1.19356	1.30396	4.72707	1.05312	4.84724
17							
	.08725	1.1179	1.24970	1.39704	4.84724	1.02333	4.96384
18							
	.09014	1.1468	1.31515	1.50821	4.96384	.98505	5.07635
19							
	.09292	1.1732	1.37640	1.61479	5.07635	.95344	5.18535
20							
	.09558	1.1972	1.43329	1.71593	5.18535	.92943	5.29155
21							
	.09905	1.2342	1.52325	1.88000	5.29155	.87679	5.39283
22							
	.10213	1.2643	1.59845	2.02092	5.39283	.84238	5.49069
23							
	.10552	1.2990	1.68740	2.19193	5.49069	.80038	5.58457
24							
	.10959	1.3435	1.80499	2.42500	5.58457	.74514	5.67349
25							
	.11342	1.3850	1.91823	2.65675	5.67349	.69861	5.75813
26							
	.11738	1.4270	2.03633	2.90584	5.75813	.65581	5.83883
27							
	.12216	1.4821	2.19662	3.25561	5.83883	.60007	5.91450
28							
	.12717	1.5397	2.37068	3.65014	5.91450	.54830	5.98544
29							
	.13267	1.6050	2.57603	4.13453	5.98544	.49510	6.05146
30							
	.13753	1.6592	2.75294	4.56768	6.05146	.45806	6.11393
31							
	.14541	1.7613	3.10218	5.46387	6.11393	.39093	6.16998
32							
	.15568	1.9016	3.61608	6.87634	6.16998	.31671	6.21859
33							
	.16004	2.0456	4.18448	8.55977	6.21859	.25914	6.26107
34							
	.16221	2.2394	5.01491	11.23039	6.26107	.20091	6.29690
35							
	.16450	2.5266	6.38371	16.12908	6.29690	.14216	6.32536
36							
	.16675	3.1134	9.69326	30.17900	6.32536	.07713	6.34431
37							
	.16900	4.6324	21.45913	99.40727	6.34431	.02375	6.35297
38							

(23)	(45)	(46)	(47)	(48)	(49)	(50)	(51)
			$\sqrt[3]{\frac{T_3}{T_{A4}}}$	$Z_3(R_R)\frac{\Delta Y_2}{\Delta Y_4}$	$\sqrt{Z_2^2-\Delta Y_2^2}$		$\frac{T_{A4}}{R_T}$
Point No.	Y_2	ΔY_2	SIN α, ¢ R_R	Z_2	ΔX_2	X_2	T_{A2}
13	4.34900					5.937	
		.12864	.59344	.36526	.34186		.36022
14	4.47764					6.279	
		.12652	.58873	.36504	.34241		.37288
15	4.60416					6.622	
		.12291	.58138	.36363	.34223		.39035
16	4.72707					6.964	
		.12017	.57568	.36261	.34212		.40587
17	4.84724					7.306	
		.11660	.56846	.36084	.34148		.42487
18	4.96384					7.647	
		.11251	.56025	.35845	.34034		.44697
19	5.07635					7.988	
		.10900	.55310	.35631	.33923		.46812
20	5.18535					8.327	
		.10620	.54716	.35471	.33844		.48734
21	5.29155					8.665	
		.10128	.53708	.35109	.33617		.51803
22	5.39283					9.002	
		.09786	.52975	.34870	.33469		.54337
23	5.49069					9.336	
		.09388	.52121	.34558	.33258		.57372
24	5.58457					9.669	
		.08892	.51036	.34139	.32961		.61362
25	5.67349					9.999	
		.08464	.50075	.33755	.32677		.65221
26	5.75813					10.325	
		.08070	.49160	.33394	.32404		.69237
27	5.83883					10.649	
		.07567	.47963	.32893	.32011		.74699
28	5.91450					10.969	
		.07094	.46793	.32398	.31612		.80609
29	5.98544					11.286	
		.06602	.45526	.31852	.31160		.87599
30	6.05146					11.597	
		.06247	.44572	.31444	.30817		.93604
31	6.11393					11.905	
		.05605	.42776	.30632	.30115		1.05481
32	6.16998					12.206	
		.04861	.40532	.29589	.29187		1.22944
33	6.21859					12.498	
		.04248	.38027	.29376	.29067		1.42277
34	6.26107					12.789	
		.03583	.34895	.29426	.29207		1.70476
35	6.29690					13.081	
		.02846	.31072	.29477	.29339		2.17024
36	6.32536					13.374	
		.01895	.25329	.29538	.29477		3.29593
37	6.34431					13.669	
		.00866	.17100	.29620	.29607		7.29643
38	6.35297					13.965	

(23)	(52)	(53)	(54)	(55)	(56)	(57)	(58)
	$\frac{\Delta Y_2}{Z_2}$	$T_{R2} \times \sin\alpha_2$		$\sqrt{R_1^2+(S_4^2-R_4^2)R_T^2}$			$Z_2(R_R)\frac{\Delta Y_1}{\Delta Y_2}$
Point No.	$\sin\alpha_2$ & R_R^2	T_2	R_1	S_1	Y_1	ΔY_1	Z_1
13					4.34900		
	.35217	.12686	4.34900	4.48137		.13237	.22305
14					4.48137		
	.34660	.12924	4.48137	4.61366		.13229	.22471
15					4.61366		
	.33800	.13194	4.61366	4.74501		.13135	.22592
16					4.74501		
	.33141	.13451	4.74501	4.87566		.13065	.22695
17					4.87566		
	.32315	.13730	4.87566	5.00509		.12943	.22769
18					5.00509		
	.31388	.14029	5.00509	5.13288		.12779	.22810
19					5.13288		
	.30592	.14321	5.13288	5.25916		.12628	.22831
20					5.25916		
	.29938	.14590	5.25916	5.38432		.12516	.22874
21					5.38432		
	.28845	.14943	5.38432	5.50695		.12263	.22831
22					5.50695		
	.28064	.15249	5.50695	5.62788		.12093	.22828
23					5.62788		
	.27166	.15586	5.62788	5.74662		.11874	.22781
24					5.74662		
	.26047	.15983	5.74662	5.86247		.11585	.22700
25					5.86247		
	.25075	.16354	5.86247	5.97567		.11320	.22606
26					5.97567		
	.24167	.16733	5.97567	6.08638		.11071	.22522
27					6.08638		
	.23004	.17184	6.08638	6.19372		.10734	.22379
28					6.19372		
	.21896	.17650	6.19372	6.29778		.10406	.22239
29					6.29778		
	.20726	.18156	6.29778	6.39824		.10046	.22066
30					6.39824		
	.19867	.18596	6.39824	6.49604		.09780	.21942
31					6.49604		
	.18298	.19301	6.49604	6.58872		.09268	.21666
32					6.58872		
	.16428	.20197	6.58872	6.67506		.08634	.21302
33					6.67506		
	.14461	.20575	6.67506	6.75580		.08074	.21231
34					6.75580		
	.12177	.20759	6.75580	6.82996		.07416	.21253
35					6.82996		
	.09655	.20954	6.82996	6.89608		.06612	.21279
36					6.89608		
	.06416	.21147	6.89608	6.95008		.05400	.21319
37					6.95008		
	.02924	.21335	6.95008	6.98665		.03657	.21386
38					6.98665		

A-24

(23)	(59)	(60)	(61)	(62)	(63)	(64)
	$\sqrt{Z_1^2-\Delta Y_1^2}$		$\frac{T_{A2}}{R_T}$	$T_{A1} \times SIN\ \alpha_1$		$\sqrt{R_T^2+(S_4^2-R_4^2)R_T^3}$
Point No.	ΔX_1	X_1	T_{A1}	T_1	R	S
13		3.428				
	.17952		.34990	.20764	4.34900	4.48522
14		3.608				
	.18164		.35611	.20965	4.48522	4.62353
15		3.790				
	.18381		.36420	.21174	4.62353	4.76388
16		3.973				
	.18557		.37151	.21387	4.76388	4.90589
17		4.159				
	.18733		.38006	.21605	4.90589	5.04949
18		4.346				
	.18894		.38975	.21836	5.04949	5.19451
19		4.535				
	.19021		.39901	.22069	5.19451	5.34065
20		4.725				
	.19146		.40707	.22273	5.34065	5.48793
21		4.917				
	.19258		.41973	.22543	5.48793	5.63611
22		5.109				
	.19362		.42978	.22768	5.63611	5.78516
23		5.303				
	.19442		.44166	.23020	5.78516	5.93485
24		5.498				
	.19521		.45673	.23310	5.93485	6.08518
25		5.693				
	.19568		.47091	.23581	6.08518	6.23582
26		5.888				
	.19613		.48519	.23852	6.23582	6.38679
27		6.085				
	.19637		.50401	.24174	6.38679	6.53794
28		6.281				
	.19654		.52354	.24498	6.53794	6.68925
29		6.477				
	.19647		.54579	.24848	6.68925	6.84055
30		6.674				
	.19642		.56415	.25145	6.84055	6.99181
31		6.870				
	.19584		.59888	.25618	6.99181	7.14293
32		7.066				
	.19474		.64653	.26205	7.14293	7.29378
33		7.261				
	.19636		.69553	.26449	7.29378	7.44429
34		7.457				
	.19917		.76126	.26564	7.44429	7.59432
35		7.656				
	.20226		.85896	.26690	7.59432	7.74381
36		7.859				
	.20624		1.05863	.26814	7.74381	7.89267
37		8.065				
	.21071		1.57509	.26934	7.89267	8.04084
38		8.276				

APPENDIX B

FABRICATION OF AN HK31A MAGNESIUM ALLOY AIRFRAME SKIN

CONTRACT NUMBER DA-33-008-ORD-2084

PROCESSING STEPS IN FABRICATION OF FIRST SAMPLE PART

Outline

1. General Set-up and Operating Procedures
2. First Operation
3. Second Operation
4. Third Operation
5. Fourth Operation
6. Trimming and Inspection

1. General Set-up and Operating Procedures

The special tooling for each operation in turn was mounted in a suitable length capacity Lodge & Shipley #40 Floturn Machine and required electrical connections made to supply heating power to the internal heating rods mounted in each arbor.

Additional heat was provided at the larger end of the arbor and to the workpiece itself by means of a hand held propane torch.

Temperature measurement was accomplished by a contact electric pyrometer whenever it was possible to stop rotation of the arbor or workpiece. During forming operations when the contact pyrometer could not be used, temperature measurements were made by means of Tempilstiks.

In order to provide lubrication between roller and workpiece and also between workpiece and arbor at operating temperature Molykote Type Z was applied to the arbor and workpiece. The powdered Molykote was mixed with a solvent so that it could be applied by brush. The flat blank was coated on both surfaces prior to the first operation. Additional Molykote was applied to the outside of the parts prior to each subsequent operation and to the inside as necessary.

2. First Operation

Arbor #2130011 and template #2130012 were mounted in a #40 x 24 Floturn Machine. A 12 inch diameter roller with 1/2 inch radius was used, set so as to provide a 5° clearance between the flat blank and the face of the roller. Template #2130012 had originally been used to finish machine the arbor, but since this machining had been done at room temperature the change of arbor contour resulting from expansion at operating temperature required that some adjustment be made in duplicating procedures.

APPENDIX B

Preliminary adjustment was accomplished by using a stylus with a diameter of $1\frac{1}{2}$ inches instead of 1 inch as would be done under normal circumstances. Additional adjustment was required and will be explained in the step-by-step procedure below. A spindle speed of 200 RPM and a feed rate of 2 inches per minute were used in the first operation.

For purposes of checking machine settings and part thickness the following points were selected from contour charts and calculations.

Point No.	"X"
0	.847
5	1.916
12	3.254
18	4.346
24	5.498
31	6.870
38	8.274

The arbor was brought to an operating temperature of 600° F. This temperature was maintained between 580° and 620° as far as possible. Some increase of temperature was encountered during the running of a part due to the addition of heat to the workpiece itself.

With the arbor at temperature the roller was brought into position at each of the seven selected check points and the gap between the roller and arbor was checked with feeler gages.

The following were gaps before running part #1 and the thicknesses obtained in part #1.

Point No.	0	5	12	18	24	31	38
Gap	.229	.234	.236	.238	.240	.244	.267
Thickness	.245	.245	.242	.238	X	X	X

Part #1 fractured at a depth of $5\frac{1}{2}$ inches and a comparison of the gap setting and resulting thickness indicated that insufficient allowance had been made for deflection of machine elements under operating loads.

The template position was adjusted so as to reduce the gap settings, and part #2 was run. The following were gaps before running part #2 and the thickness obtained in part #2

APPENDIX B

Point No.	0	5	12	18	24	31	38
Gap	.216	.218	.220	.222	.224	.228	.249
Thickness	.231	.232	.231	.227	.222	X	X

Part #2 fractured at a depth of 6½ inches and a comparison of the gap setting and resulting thickness indicated that insufficient material was available at point #18 and #24. This is particularly apparent at point #24 where the resulting thickness is less than the gap between the roller and arbor. Observation of the part during the Floturn operation indicated that better results could be obtained if the part were over thinned from the small end to point #12. Since the original thicknesses presented in the first calculations were based on theoretical reductions and are thicker than necessary it was decided to adjust thicknesses up to point #12 so that the displaced material would be available at points further along the part.

The template position was adjusted and part #3 run to full length. The following were gaps and thicknesses produced in part #3.

Point No.	0	5	12	18	24	31	38
Gap	.197	.206	.212	.218	.223	.231	.251
Thickness	.218	.223	.228	.229	.224	.235	.261

A comparison of the gap setting and resulting thickness indicated that suitable results were obtained through point #18 but that more material must be made available through the balance of the part. This can be accomplished by introducing a preliminary spinning operation to the outer portion of the blank so as to reduce the diameter of the blank without encountering the thinning that results from forming directly to final shape. This spinning was provided for by clamping an auxiliary plate to the template tangent to the existing contour at point #18 so that the roller would continue along a straight path into the flat blank at an angle. The roller will perform its forming and thinning in a normal manner up to point #18 and will then spin the remaining portion of the blank.

The auxiliary plate is then removed and the roller makes a second pass over the part from point #18 to the large end. Manual adjustments are made to the template setting at the start of the second pass so as to provide a smooth blend between the portion produced by the first pass up to point #18 and the portion produced by the second pass beyond point #18. Part #4 was run as outlined and the following thicknesses obtained.

Point No.	0	5	12	18	24	31	38
Thickness	.217	.221	.225	.225	.232	.240	.263

Part #4 appeared to be much better as it was apparent that extra material was gathered in satisfactorily during the spinning portion of the operation, however, the part was still thin at points #31 and #38. The cause of this thinness was the variation between arbor contour and template contour resulting from expansion of the arbor at operating temperature.

APPENDIX B

As a preliminary adjustment the next four parts were run without change of setting except that a .005 feeler was inserted between the stylus and template at a point one-third of the distance from point #24 to point #31. This feeler was replaced by a .010 feeler at a point two-thirds of the distance from point #24 to point #31 and kept between the stylus and the template for the balance of the length of each part. This adjustment is illustrated on Page B-5. The following are the results obtained on the next four parts with corresponding gaps checked as indicated.

Point No.	0	5	12	18	24	31	38
Thickness - Part #5	.218	.225	.224	.225	.234	.254	.275
Gap after running #5	.198	.205	.209	.216	.220	.238	.261
Thickness - Part #6	.212	.217	.225	.225	.232	.250	.274
" Part #7	.215	.218	.226	.222	.230	.248	.270
" Part #8	.212	.215	.222	.222	.227	.247	.268
Gap after running #8	.189	.197	.203	.208	.213	.232	.254

The temperature of the arbor prior to running the preceding four parts was in the range of 580° to 620° with the small end of the arbor being hottest and the temperature decreasing slowly toward the large end. After running part #8 the temperature of the arbor was approximately 660° at the small end and 630° at the large end. This increase of temperature resulted from the addition of heat from the external torch used to heat the workpieces. The additional expansion resulting from this increase of temperature reduced the gap between the roller and arbor and caused each successive part to be slightly thinner. This effect of change of arbor temperature points out the necessity of maintaining consistent gap settings between the roller and arbor.

The actual temperature of the arbor is not of great importance as the working temperature of the workpiece is established while the portion of the material being worked is still off of the surface of the arbor. The purpose of providing internal heating for the arbor is to avoid the chilling effect of a cold arbor.

Before continuing with the balance of the parts a final adjustment was made to the template contour at points #31 and #38. This adjustment was made by applying four layers of .0025 thick tape to the template with ends staggered as illustrated on page B-5.

The balance of the fifteen parts was run and the following results obtained. Notice that the gap between the roller and arbor was checked after running part #11 at points #0 and #38 only and reset.

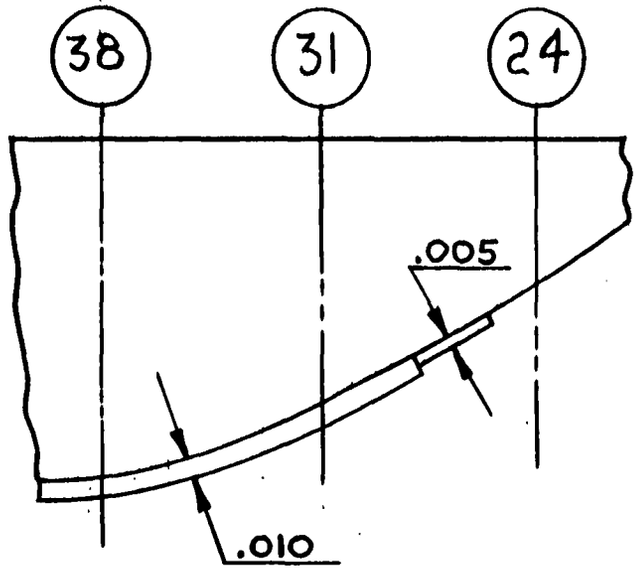

PRELIMINARY ADJUSTMENT OF TEMPLATE CONTOUR

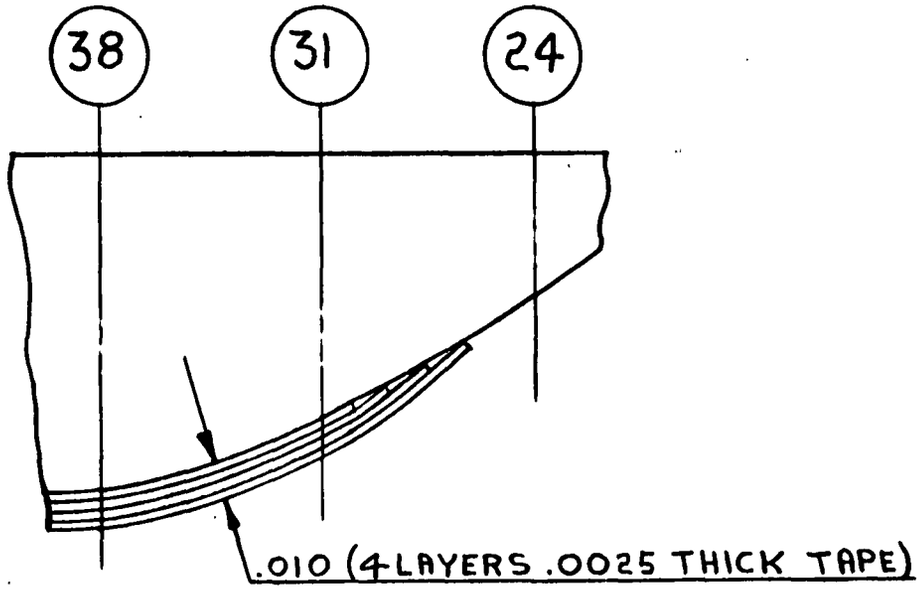

FINAL ADJUSTMENT OF TEMPLATE CONTOUR

NO SCALE

APPENDIX B

Point No.	0	5	12	18	24	31	38
Gap before running #9	.198	.206	.211	.216	.222	.241	.260
Thickness - Part #9	.216	.220	.227	.227	.233	.253	.274
Thickness - Part #10	.218	.222	.227	.225	.234	.253	.274
Thickness - Part #11	.213	.217	.221	.220	.229	.247	.272
Gap after running #11	.193	X	X	X	X	X	.255
Gap reset	.197	X	X	X	X	X	.261
Thickness - Part #12	.213	.215	.221	.224	.231	.252	.275
Thickness - Part #13	.216	.220	.225	.226	.233	.254	.277
Thickness - Part #14	.215	.219	.223	.222	.230	.249	.274
Thickness - Part #15	.213	.217	.217	.218	.225	.246	.270
Gap after running #15	.191	.200	.204	.209	.218	.238	.257

Part #12 had a small split on the inside surface at about point #24 which appeared to be the result of an inclusion or lamination in the material. No further work is planned on this part.

Part #15 had a shallow depression rolled in the outer surface between points #5 and #12 and was excessively thin at point #12. Both of these discrepancies were the result of the template bar being accidentally bumped during the running of the part.

The following is a summary of the thickness obtained on all of the parts in the first operation.

APPENDIX B

POINT NUMBERS

Part No.	0	5	12	18	24	31	38
1	.245	.245	.242	.238	X	X	X
2	.231	.232	.231	.227	.222	X	X
3	.218	.223	.228	.229	.224	.235	.261
4	.217	.221	.225	.225	.232	.240	.263
5	.218	.225	.229	.225	.234	.254	.275
6	.212	.217	.225	.225	.232	.250	.274
7	.215	.218	.226	.222	.230	.248	.270
8	.212	.215	.222	.222	.227	.247	.268
9	.216	.220	.227	.227	.233	.253	.274
10	.218	.222	.227	.225	.234	.253	.274
11	.213	.217	.221	.220	.229	.247	.272
12	.213	.215	.221	.224	.231	.252	.275
13	.216	.220	.225	.226	.233	.254	.277
14	.215	.219	.223	.222	.230	.249	.274
15	.213	.217	.217	.218	.225	.246	.270

In the interest of maintaining the most uniform conditions for subsequent work, it was decided to re-arrange the order of the parts for the next operation based upon the thicknesses obtained in the first operation. This new order was established as follows:

Part	#3	#11	#9
	#4	#6	#13
	#15	#7	#10
	#8	#14	#5

The last nine parts in the revised order were trimmed to remove the scrap flange from the large end and to establish a surface square with centerline so that a check could be made of the diameter at point #38. The set-up used to determine this diameter is shown on Page B-8.

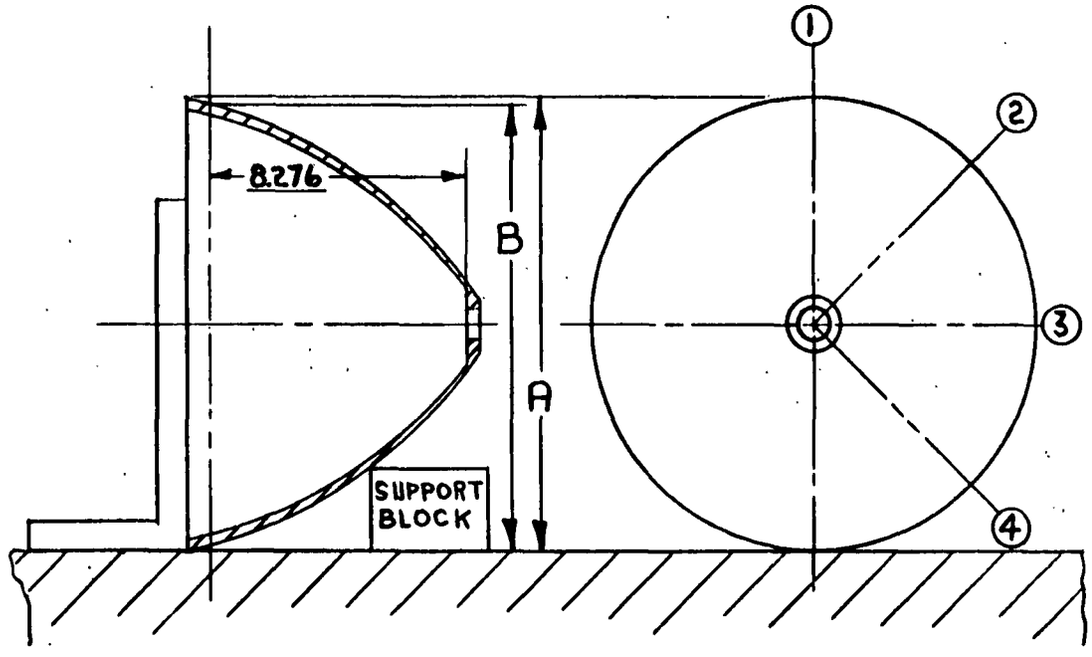

SET-UP FOR MEASURING DIAMETER OF PARTS AT LARGE END AFTER FIRST FLOTURN OPERATION

NO SCALE

APPENDIX B

The following is a listing of the measurements obtained and the indicated inside diameter at point #38.

PART NUMBER

		5	6	7	8	9	10	11	13	14
1.	A	14.813	14.769	14.911	14.955	14.908	14.846	14.801	14.770	14.773
	B	14.707	14.673	14.759	14.767	14.761	14.714	14.692	14.693	14.695
2.	A	14.792	14.750	14.910	14.941	14.916	14.835	14.792	14.761	14.744
	B	14.688	14.663	14.754	14.755	14.770	14.706	14.675	14.680	14.658
3.	A	14.789	14.781	14.906	14.959	14.907	14.836	14.787	14.773	14.773
	B	14.692	14.699	14.738	14.770	14.758	14.710	14.671	14.695	14.682
4.	A	14.782	14.751	14.911	14.959	14.875	14.848	14.811	14.793	14.774
	B	14.689	14.683	14.734	14.770	14.726	14.725	14.695	14.711	14.685
Average	A	14.794	14.763	14.910	14.954	14.902	14.841	14.798	14.774	14.768
	B	14.694	14.680	14.746	14.766	14.754	14.714	14.683	14.695	14.680
O.D.		14.594	14.599	14.582	14.578	14.606	14.584	14.568	14.616	14.592
Thk.Pt.#38		.275	.274	.270	.268	.274	.274	.272	.277	.274
I.D.		14.044	14.051	14.042	14.042	14.058	14.043	14.024	14.062	14.044

The resulting diameters were somewhat oversize as compared to the originally calculated diameter at point #38, however, this condition should not present any problem as the spinning portion of the second operation will be capable of moving the material in somewhat more than planned.

APPENDIX B

3. Second Operation

Arbor #2130021 and template #2130022 were mounted in a #40 x 24 Floturn Machine. A 12 inch diameter roller with 1/2 inch radius was used set so as to provide an angle of 85° between the face of the roller and centerline of the machine. A one inch diameter stylus was used. A spindle speed of 200 RPM and a feed rate of 1½ inches per minute were used in the second operation.

For purposes of checking machine settings and part thickness the following points were selected from contour charts and calculations.

Point No.	"X"
0	1.111
5	3.068
12	5.598
18	7.647
24	9.669
31	11.905
38	13.965

The arbor was brought to an operating temperature of 600° F. This temperature was maintained between 580° and 620° as far as possible.

With the arbor at temperature the roller was brought into position at each of the seven check points and the gap between the roller and arbor was checked with feeler gages.

In order to provide compensation for the change of arbor contour resulting from expansion an auxiliary template was made to provide a modified contour from just beyond point #24 to point #38. This auxiliary template was also used to perform two spinning operations on the outer portion of the part similar to that done in the first operation. Location of the auxiliary template for the spinning operations and final forming was obtained by placing etched lines on the original template and aligning the auxiliary template by eye.

The following are the gap settings and thicknesses produced on part #3.

Point No.	0	5	12	18	24	31	38
Gap before running #3	.122	.129	.138	.147	.150	.169	.187
Thickness - Part #3	.131	.138	.146	.149	.171	.198	.223
Gap after running #3	.113	.120	.133	.142	.146	.178	.210

The reduction of gap from point #0 to point #24 resulted from an increase of arbor temperature during the running of the part while the increase of gap at points #31 and #38 were due to the lack of positive location of the auxiliary template.

A new auxiliary template was made which could be positively located by means of a pivot pin near point #18 and gage blocks against the locating edge of the template bar. Settings of this new auxiliary template were determined to provide for two spinning operations and the final forming pass of the roller.

The following are gap settings and thicknesses produced on part #4.

Point No.	0	5	12	18	24	31	38
Gap before running #4	.127	.128	.129	.126	.130	.164	.194
Thickness Part #4	.141	.138	.137	.135	.144	.179	.209
Gap after running #4	.124	.123	.124	.122	.122	.157	.188

Several small surface fractures appeared on the inside surface in the area around point #31. The fractures resulted from allowing the outer portion of the part to touch the arbor during the spinning passes of the roller.

The template bar was moved out .010 to compensate for expansion of the arbor and the settings of the auxiliary template modified to avoid the possibility of the part touching the arbor during the spinning passes.

The following are gap settings and thicknesses produced on part #15.

Point No.	0	5	12	18
Thickness, Part #15	.143	.141	.141	.136
Gap After running #15	.134	.133	.134	.131

Part #15 fractured just beyond point #18 due to the lack of material resulting from the thin area produced in the first operation.

At this point in the program the problem of determining the best practical thickness was reviewed and corresponding gap settings were determined. This review took into consideration the decision to make the parts thinner than theoretical up to point #12 as discussed in the first operation. As a result of this review it was decided that the following gaps would provide satisfactory results.

Point No.	0	5	12	18	24	31	38
Desired Gap	.109	.111	.114	.122	.135	.165	.195

APPENDIX B

Repeated trials of various template settings and several different stylus diameters led to the conclusion that the desired settings could not be obtained with the existing template and that it would be necessary to make a new template.

In order to establish a suitable set of coordinates for making a new template, the manner of designating points on the arbor and part was revised. The original system of using the point numbers and locations from the theoretical calculations was discarded and a new set of points established. These new points were taken at one inch increments from the end of the arbor and were numbered 1 through 14.

Desired thicknesses were established at each new point by interpolation from the original calculation as necessary and allowance made for machine deflection was determined from results obtained on parts #3, #4, and #15.

The roller was removed from the Floturn machine and replaced by a hardened pointer as illustrated on Page B-13. The location of the machine carriage was found by means of gage blocks so that accurate one inch increments of length could be established. At each point the proper gap was set with feeler gages and the corresponding dimension from the template bar to the stylus was determined. The resulting set of coordinates was used to lay out a new template.

The following data is the information used to establish a new set of template coordinates.

"X" - Distance from end of arbor.

"T" - Expected thickness with allowance for modification in first seven inches due to change in first operation.

"G" - Desired gap which allows for expected machine deflection.

"Y" - Distance from template locating rail to stylus.

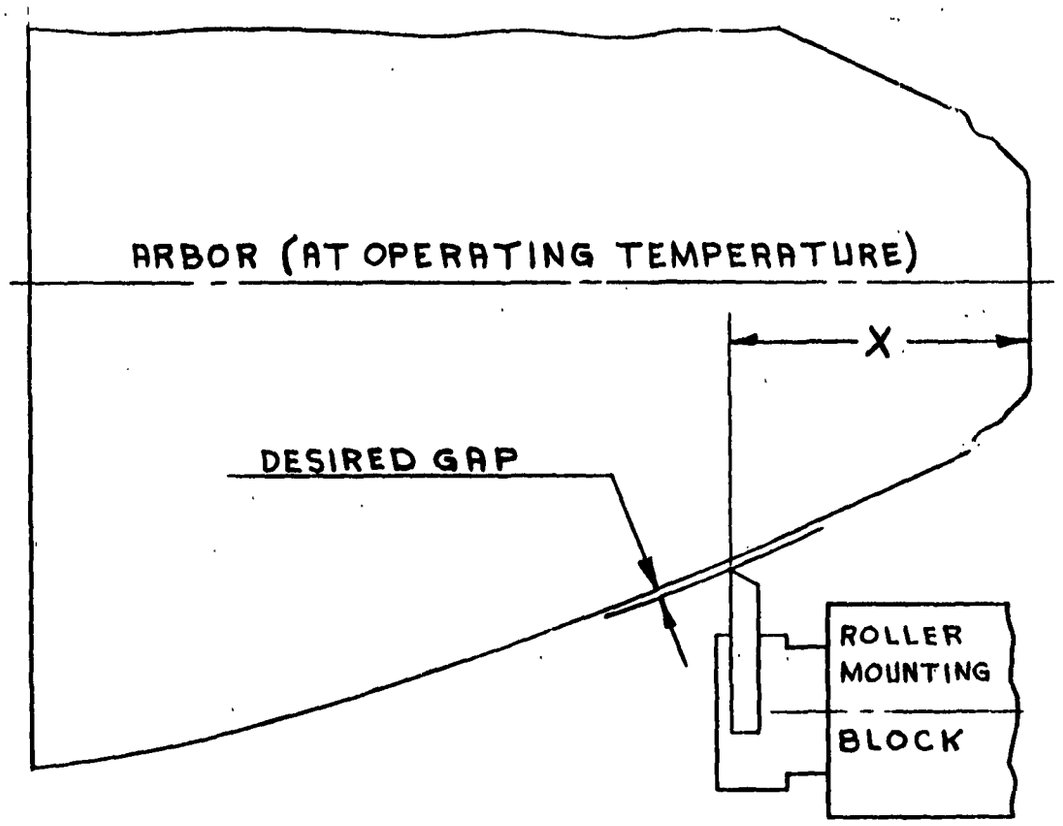

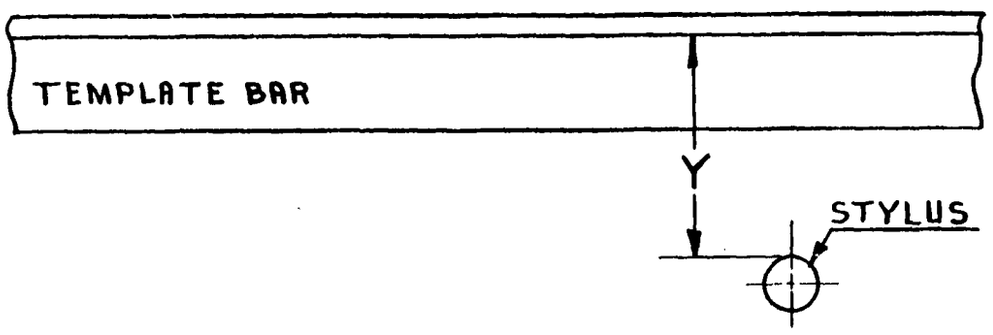

METHOD OF DETERMINING EFFECTIVE CONTOUR OF ARBOR AT OPERATING TEMPERATURE FOR PURPOSES OF MAKING NEW TEMPLATE.

NO SCALE

APPENDIX B

X	T	G	Y
1.000	.127	.109	5.988
2.000	.127	.110	6.470
3.000	.127	.111	6.932
4.000	.128	.112	7.367
5.000	.129	.113	7.792
6.000	.131	.114	8.185
7.000	.135	.118	8.554
8.000	.142	.124	8.896
9.000	.149	.130	9.214
10.000	.160	.138	9.502
11.000	.172	.150	9.767
12.000	.186	.165	9.984
13.000	.200	.180	10.158
14.000	.215	.195	10.245

APPENDIX B

So as to provide actual working coordinates for the laying out of a template, a value of 2.000 was added to "X" and .875 was added to "Y".

The following are actual coordinates used.

X	Y	
0.000	5.354	Straight Line
2.000	6.360	
3.000	6.863	
4.000	7.345	
5.000	7.807	
6.000	8.242	
7.000	8.667	
8.000	9.060	
9.000	9.429	
10.000	9.771	
11.000	10.089	
12.000	10.377	
13.000	10.642	
14.000	10.859	
15.000	11.033	
16.000	11.120	

APPENDIX B

Using the new template a set-up was made to Floturn the part to a depth of eight inches and then perform two spinning passes on the remaining portion of the part before Floturning to final configuration. The path to be followed during the spinning passes was selected visually by comparing the shape and location of a small auxiliary template with the shape of the Floturn template. When positions had been selected which appeared to be satisfactory, a record was made by measuring the deviation from the Floturn template normal to each point. The following are the deviations recorded, and the general shape is shown by the sketch at the top of Page B-17

Point No.	Deviation 1st spin	Deviation 2nd spin
8	1/16	- -
9	11/32	3/32
10	9/16	17/64
11	19/32	1/4
12	19/32	9/64
13	5/8	3/32
14	23/32	3/32

Following the determination of the spinning paths to be used the gap between the roller and arbor was checked at each point and then part #8 was processed as planned. An examination of part #8 after completion showed that there were several small cracks on the inside surface at point #11, and at point #8 there was a shallow groove approximately 1/4 inch wide extending completely around the part on the inside surface. Due to the presence of these conditions and the fact that the part was too thin from point #9 to the large end it was decided to retain this part as a sample and to perform no further work on it.

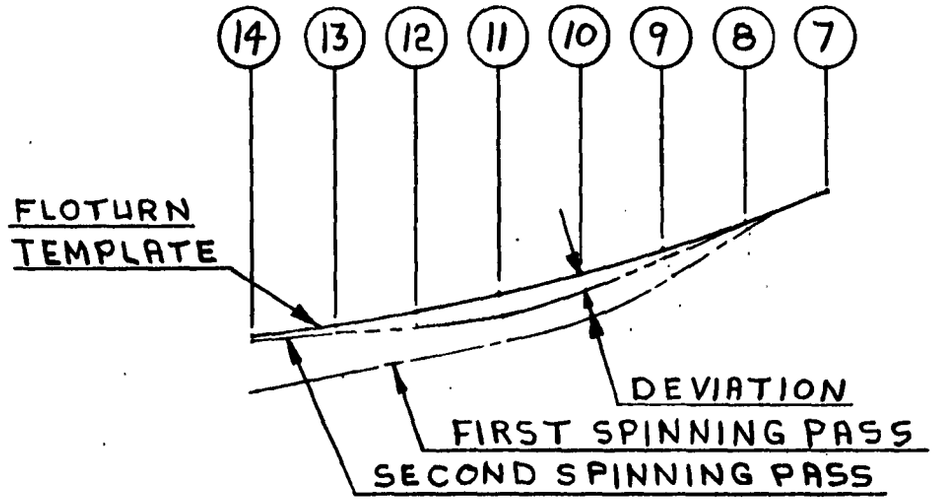

LAYOUT OF SPINNING PASSES USED FOR PART #8 IN 2ND. OPERATION

SCALE: 1/2

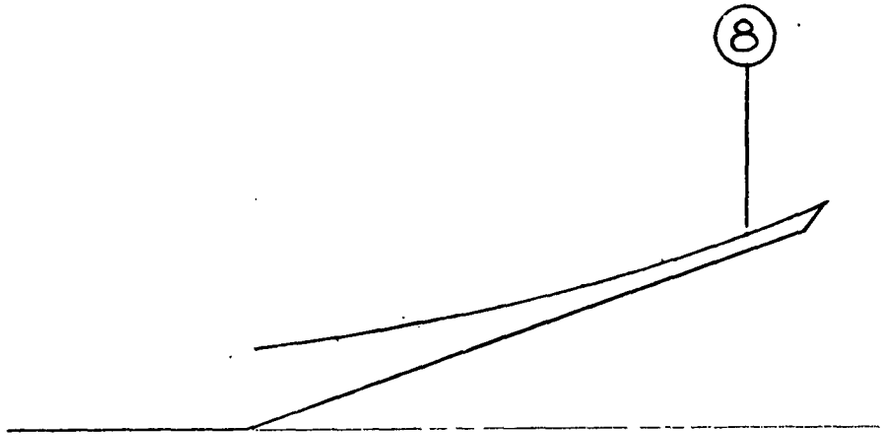

GENERAL LAYOUT OF SPINNING PASSES USED ON PARTS-11-6-7-14-9-13-10 AND 5

SCALE: 1/2

APPENDIX B

The following is a listing of the gap before Floturning, the thickness produced, and the gap after Floturning.

Point No.	Gap Before Running Part #8	Thickness	Gap After Running Part #8
1	.111	.132	
2	.110	.128	.103
3	.113	.131	
4	.115	.132	.111
5	.118	.133	
6	.118	.134	.118
7	.122	.135	
8	.127	.138	.123
9	.127	.133	
10	.135	.138	.131
11	.148	.154	
12	.165	.171	.164
13	.182	.187	
14	.194	.202	.195

Due to the part being thin from point #9 on to the large end it appeared that the spinning passes did not gather the material sufficiently, and some modification was required.

The description of the processing and general observations of results follow for the balance of the parts. Thickness readings are presented on Page B-21.

APPENDIX B

Part #11 was Floturned up to point #8 with the same gap setting as existed after Floturning part #8. The roller then was fed parallel to centerline with the stylus 11¼ inches from the template locating rail. This corresponded to a roller position of approximately 6.650 from centerline. A narrow round groove was found on the inside surface at point #8 similar to that inside of part #8. The thickness was improved at points #13 and #14, however, the area from point #8 to point #11 showed no improvement.

Part #6 was Floturned up to point #8. The roller then was fed parallel to centerline with the stylus 11¼ inches from the template locating rail in the same manner as on part #11. A straight edged auxiliary template was then added so that the roller made a spinning path at 22° to centerline. The auxiliary template was set 3/16 away from the Floturn template at point #8. Upon completion of this spinning pass the roller again fed parallel to centerline with the stylus 11 inches from the template locating rail.

Upon completion of the Floturn operation it was found that there were several small cracks on the inside surface at point #13 which apparently resulted either from the fact that the third spinning pass caused the part to touch the arbor or to the fact that insufficient heat was applied to the part. Once again a narrow round groove was found on the inside surface at point #8. This groove which had appeared in all parts up to this point in the second operation was attributed to galling resulting from the flexing action of the part during the spinning passes. All subsequent parts will be removed from the arbor after completion of the spinning passes, and the galled area polished smooth before completing the Floturn operation. The resulting thickness of part #6 showed some improvement in the area from point #8 to point #11, however, it was still somewhat thin. The following is a partial check of the template setting used when running part #6.

Point No.	1	8	14
Gap before running part #6	.110	.127	.203
Gap after running part #6	.108	.127	.201

In order to provide more thickness in the area from point #8 to point #11 it was decided to modify the spinning passes when running part #7. The first pass was to be made parallel to centerline with the stylus 11¼ inches from the locating rail. The second pass was to be made at an angle of 17° to centerline with the auxiliary template set 3/16 away from the Floturn template at point #8. Part #7 was Floturned to point #8 and the first spinning pass started, however, the part fractured in the area being spun, and the resulting momentary shocks caused by the fractured area striking the roller caused a fracture in the Floturned portion between points #5 and #6. The initial fracture in the area being spun resulted from the fact that insufficient heat was applied to the part.

APPENDIX B

Part #14 was then run in the manner outlined for part #7. The second spinning pass was too close to the arbor and allowed the part to touch the arbor. One small crack was found on the inside surface at point #11 when the part was removed for inspection after the spinning passes. This crack was polished out as it was not very deep. During the second, or angular, spinning pass it was observed that the portion of the part which had been spun down during the first spinning pass tended to flare out and assume a conical shape forming an extension of the shape formed by the second spinning pass. In order to overcome this condition it was decided to reverse the order of the spinning pass on the balance of the parts and perform the angular pass first and the pass parallel to centerline second. The thickness produced in part #14 showed additional improvement, and although it was still thinner than what was expected in the area from point #8 to point #11, a decision was made to complete the lot of parts with the major objective being the making of consistent parts rather than to continue varying conditions on each part. The following are the gap settings before running part #14.

Point No.	2	4	6	8	10	12	14
Gap	.110	.116	.121	.130	.137	.169	.199

Part #9 was run with the spinning passes modified as suggested above. The first spinning pass was modified slightly to 19° to centerline so that the part would not touch the arbor. The part produced was satisfactory in that the thickness was consistent with the previous part, and no fractures or cracks were visable. An improvement in thickness was noted in the area from point #11 to point #14 resulting from the reversing of the order of the spinning passes. The following are the gap settings before running part #9.

Point No.	2	4	6	8	10	12	14
Gap	.109	.116	.119	.131	.133	.166	.198

Parts #13, #10, and #5 were then run consecutively in the same manner as part #9 with spot checks made of the roller gap. The results obtained were satisfactory except that several small cracks appeared on the inside surface of part #5 at point #13. No particular cause of this cracking could be determined.

APPENDIX B

The following is a summary of the thickness obtained on all full length parts in the second operation.

Point No.	Part Numbers									
	3	4	8	11	6	14	9	13	10	5
1	.128	.140	.132	.122	.124	.123	.125	.121	.120	.126
2	.131	.139	.128	.119	.121	.119	.122	.121	.118	.123
3	.135	.137	.131	.122	.125	.123	.125	.124	.123	.130
4	.141	.138	.132	.124	.126	.126	.126	.126	.124	.131
5	.143	.138	.133	.127	.130	.130	.129	.131	.128	.133
6	.147	.134	.134	.127	.131	.129	.129	.130	.127	.133
7	.148	.129	.135	.129	.133	.133	.132	.132	.129	.134
8	.155	.131	.138	.133	.137	.146	.143	.145	.140	.138
9	.156	.128	.133	.130	.135	.142	.142	.142	.142	.138
10	.181	.142	.138	.139	.145	.150	.153	.149	.147	.146
11	.183	.152	.154	.154	.158	.164	.167	.164	.162	.161
12	.198	.176	.171	.174	.178	.179	.184	.182	.180	.179
13	.217	.190	.187	.193	.197	.197	.200	.200	.198	.196
14	.223	.207	.202	.208	.211	.210	.214	.214	.214	.212

APPENDIX B

In order to obtain the most consistent conditions for subsequent work, it was decided to re-arrange the order of parts for the next operation based upon the thicknesses obtained in the second operation. This new order was established as follows:

Part #6	#14
#5	#10
#11	# 9
#3	#13
#4	

The parts were trimmed to remove the scrap flange from the large end and to establish a surface square with centerline so that a check could be made of the diameter at a point 14 inches from the small end. The set-up used to determine this diameter is similar to that shown on Page B-8.

Part Numbers

		3	4	11	6	14	9	13	10	5
1	A	13.610	13.221	13.281	13.303	13.330	13.432	13.315	13.424	13.423
	B	13.588	13.185	13.248	13.271	13.304	13.383	13.283	13.370	13.396
2	A	13.620	13.232	13.246	13.313	13.304	13.424	13.308	13.423	13.428
	B	13.599	13.195	13.215	13.279	13.280	13.376	13.275	13.368	13.402
3	A	13.633	13.235	13.345	13.250	13.244	13.421	13.312	13.425	13.429
	B	13.602	13.196	13.312	13.223	13.217	13.375	13.279	13.370	13.404
4	A	13.617	13.220	13.361	13.232	13.310	13.436	13.320	13.424	13.425
	B	13.578	13.179	13.326	13.210	13.284	13.394	13.286	13.367	13.404
Average	A	13.620	13.227	13.308	13.275	13.297	13.428	13.314	13.424	13.426
	B	13.592	13.189	13.275	13.246	13.271	13.382	13.281	13.369	13.402
O.D.		13.564	13.151	13.242	13.217	13.245	13.336	13.248	13.314	13.378
Thk. Pt.#14		.223	.207	.208	.211	.211	.214	.214	.214	.212
I.D.		13.118	12.737	12.826	12.795	12.825	12.908	12.820	12.886	12.954

No particular significance could be placed on the variation of the end diameter other than it was the result of the wide variation of types of spinning passes used and the fact that none of the parts were brought down to arbor diameter. Subsequent work on another lot of material will permit additional improvement in this condition.

APPENDIX B

4. Third Operation

Arbor #2130031 was mounted in a #40 X 24 Floturn Machine. Before any work was attempted coordinates were obtained from the arbor at operating temperature for the purpose of making a new template. A set-up similar to that shown on Page B-13 was used to determine the coordinates.

The following data is the information used to establish a new set of template coordinates for the third operation.

"X" - Distance from end of arbor.

"T" - Expected thickness with allowance at the small end due to changes made in the first and second operations.

"G" - Desired gap which allows for expected machine deflection.

"Y" - Distance from template locating rail to stylus.

APPENDIX B

X	T	G	Y
1.375	.074	.067	5.943
2.000	.074	.067	6.133
3.000	.074	.067	6.421
4.000	.074	.067	6.715
5.000	.074	.068	6.984
6.000	.075	.069	7.250
7.000	.077	.071	7.500
8.000	.079	.073	7.740
9.000	.081	.074	7.970
10.000	.081	.074	8.186
11.000	.082	.075	8.397
12.000	.086	.079	8.600
13.000	.091	.084	8.784
14.000	.096	.088	8.958
15.000	.102	.094	9.122
16.000	.110	.102	9.266
17.000	.117	.108	9.396
18.000	.127	.118	9.515
19.000	.140	.131	9.614
20.000	.161	.151	9.704
21.000	.165	.155	9.748
22.000	.170	.160	9.764

So as to provide actual working coordinates for the laying out of a template, a value of 2.000 was added to "X" and 1.875 was added to "Y".

The following are actual coordinates used.

X	Y
0.000	6.757
2.000	7.386
3.375	7.818
4.000	8.008
5.000	8.296
6.000	8.590
7.000	8.859
8.000	9.125
9.000	9.375
10.000	9.615
11.000	9.845
12.000	10.061
13.000	10.272
14.000	10.475
15.000	10.659
16.000	10.833
17.000	10.997
18.000	11.141
19.000	11.271
20.000	11.390
21.000	11.489
22.000	11.579
23.000	11.623
24.000	11.639

APPENDIX B

The description of the processing, observation, and results obtained on each part follow while the detailed listing of the gap settings and thicknesses are given on Pages B-29 and B-30.

Part #6 was Floturned without any attempt being made to introduce a spinning pass at the large end. This approach was taken to determine the best settings for producing the desired thicknesses up to approximately point #10. A roller with a 1/2 inch radius was used with a feed rate of 2 inches per minute and a spindle speed of 200 RPM. The thicknesses produced were fairly good up to point #10, however, beyond this point the part thickness dropped below the desired figure and at point #18 the part fractured. The fracture carried back to point #13. During the running of the part it was observed that the portion of the part which had been Floturned did not conform to the arbor configuration but tended to bulge out behind the roller and be larger in diameter than the arbor. This condition is common in a Floturn operation and indicates, usually, that the feed rate is too slow resulting in a ring rolling condition in which a given section of the part passes under the roller several times and is increased in circumference.

Part #5 was Floturned in the same manner as Part #6 except that the feed rate was increased to 3 inches per minute. The major portion of the surface of part #5 was covered with a series of small cracks or crazes. This condition was considered to be possibly due to internal ruptures produced in the second operation. No usable thickness measurements were obtained from this part.

Part #11 was Floturned at a feed rate of 3 inches per minute and a condition similar to that in part #5 developed, however, the small cracks were confined to one side of the part. Since the same condition developed in part #5 and part #11 it appeared possibly that the higher feed rate used on these two parts was too great.

Part #3 was run with the feed rate again at 2 inches per minute, and the gap setting reduced slightly as another approach at making the part conform to the arbor configuration. The thicknesses produced were again fairly good up to point #10 with the thickness then dropping below the desired figure, and the part fractured at point #18.

In order to establish some condition which would make it possible to produce a part to arbor contour with the thickness a secondary consideration, it was decided to start Floturning a part with a roller gap setting which was known to be too tight and then adjust the template while the part was being run. This approach was based upon the fact that suitability of the gap setting can be judged during the running of a part by observing the action of the material just ahead of the roller. Before starting the next part the actual gap settings were checked and then during the running of the part all adjustments made to the template were measured by means of indicators located at each end of the template bar. The adjustments

were recorded, and after completion of the part the template bar was returned to its original position. Another indicator was placed against the template and the adjustments repeated so that the actual change of template position could be determined. The gaps given in the summary are the actual gaps existing taking into consideration the adjustments made to the template.

While the order of parts set-up for this operation did not call for it, part #14 was selected to be run as outlined above. The part conformed to the arbor configuration during the operation, and the part fractured at point #20. The part was thin at the small end but the thickness from point #5 to point #10 was very close to the desired value. Beyond point #10 the part was thinner than desired and indicated that pre-spinning was necessary at the big end.

Part #4 was Floturned to point #10, and then a spinning pass was made by means of an auxiliary template. The following deviations were recorded between the Floturn template and the auxiliary template.

Point No.	Deviation	Point No.	Deviation
10	1/4	15	7/16
11	9/32	16	1/2
12	5/16	17	15/32
13	3/8	18	13/32
14	13/32	19	5/16

The resulting template set-up was very similar to that shown on page B-17. Part #4 fractured at point #20, and the fracture extended back to point #18. The thickness produced showed some improvement at the large end, however, a shallow round groove was present on the inside at point #10 similar to that found during the second operation.

Part #10 was Floturned with a feed rate of 1½ inches per minute and then spun by a series of passes of the roller parallel to centerline. The passes were made with the rollers the following distances from the template locating rail.

Pass	Distance from rail	Approximate distance from centerline
1	12.070	6.550
2	11.880	6.360
3	11.700	6.180
4	11.600	6.080
5	11.500	5.980

The outer portion of the part seemed to reduce in diameter satisfactorily during the spinning passes, however, during the fifth pass the portion of the part ahead of the roller flared out in the last two inches resulting in crazing and cracking of the inner surface. After completing the Floturn operation it was found that the inner surface was also crazed in the area from point #10 to point #14, and there were two small cracks through the part at point #6. The crazing was attributed to the flexing of the part about the last point of contact during the spinning passes, while the two small cracks seemed to be the result of material flaw or inclusion.

In order to overcome the problem of crazing on the inner surface it was planned to run part #9 with the spinning passes performed prior to Floturning and to use caution to avoid the flaring of the end. Since the part was supported only at the small end it broke in the area of the step or off-set at the small end during the spinning passes. No further work could be done on this part.

Part #13 was Floturned to point #15 and then spun by three passes of the roller at the following settings.

Pass	Distance from rail	Approximate distance from centerline
1	11.890	6.370
2	11.790	6.270
3	11.690	6.170

During the first and second pass, as the roller approached the end of the part and the material ahead of the roller started to flare, the roller was slowly backed away from the arbor .100 inches to avoid excessive flare. The third spinning pass was stopped approximately two inches short of the end of the part. After completion of the spinning passes the part was Floturned from point #15 to the end. During the entire time that part #13 was on the arbor it appeared to be the best part, and the operation seemed to be the most satisfactory of the entire program except for galling and pitting of the part by the roller from point #6 to point #8 due to an insufficient coat of Molykote. Upon removing the part from the arbor it was found that there was a series of craze lines in a diagonal pattern at point #2 and two small cracks on the inside surface at point #22. The thickness was still less than desired but showed noticeable improvement over preceding parts.

Since so much difficulty had been encountered in the third operation with fracturing and cracking of the parts, advice was sought from the material supplier. A technical representative visited our Facilities and reviewed our results. We were advised that all of the fractures encountered were cold fractures. The suggestion was made that this difficulty could be overcome by working the material at a temperature of 700° to 750° instead of 600° to 650° as had been done.

APPENDIX B

Part Number

	6			11			3		
Point No.	Gap before Part #6	Thk.	Gap after Part #6	Gap Before Part #11	Thk.	Gap after Part #11	Gap before Part #3	Thk.	Gap after Part #3
1.375		.072		.056	.076	.053		.073	
2.000	.060	.068	.056	.055	.070	.049	.052	.068	.048
3.000		.070		.055	.070	.048		.069	
4.000		.071		.056	.075	.049		.069	
5.000		.075		.060	.078	.054		.073	
6.000	.064	.074	.059	.060	.077	.054	.055	.071	.051
7.000		.075		.062	.078	.055		.073	
8.000		.075		.064	.078	.057		.074	
9.000		.079		.067	.081	.061		.076	
10.000	.068	.077	.064	.066	.079	.061	.060	.075	.055
11.000		.078		.066	.080	.063		.075	
12.000		.083		.069	.080	.067		.078	
13.000		.087		.073	.081	.073		.082	
14.000	.082	.090	.080	.079	.085	.078	.075	.087	.071
15.000		.093		.087	.091	.085		.093	
16.000		.097		.092	.094	.091		.098	
17.000		.101		.097				.102	
18.000	.112	.114	.110	.110			.106	.115	.102
19.000				.121				.127	
20.000				.141					
21.000				.146					
22.000	.153			.151			.146		

APPENDIX B

Part Number

		14		4			10		13
Point No.	Gap before Part #14	Thk.	Gap before Part #4	Thk.	Gap after Part #4	Gap before Part #10	Thk.	Gap before Part #13	Thk.
1.375	.044	.060		.071			.065		.063
2.000	.048	.055	.055	.069	.045	.048	.062	.050	.062
3.000	.049	.064		.069			.061		.062
4.000	.052	.067		.070			.062		.064
5.000	.058	.076		.073			.065		.069
6.000	.059	.076	.060	.073	.048	.052	.065	.055	.069
7.000	.061	.077		.073			.066		.071
8.000	.062	.077		.074			.067		.072
9.000	.064	.080		.077			.068		.073
10.000	.064	.080	.066	.074	.053	.057	.067	.062	.074
11.000	.061	.080		.075			.068		.074
12.000	.063	.077		.077			.070		.077
13.000	.064	.077		.081			.074		.082
14.000	.067	.080	.079	.086	.069	.070	.080	.076	.088
15.000	.070	.084		.092			.085		.094
16.000	.073	.085		.098			.089		.101
17.000	.076	.084		.103			.094		.112
18.000	.083	.094	.111	.116	.101	.100	.108	.108	.121
19.000		.101		.126			.118		.129
20.000		.120		.143			.136		.139
21.000							.140		.153
22.000			.153		.144	.142	.152	.152	.163

APPENDIX B

5. Fourth Operation.

No significant results were obtained from the limited work done on the fourth operation.

Part #6 and part #14 were trimmed to a length of 13 inches, and part #3 and part #4 were trimmed to a length of 17 inches after the third operation to obtain usable material for the fourth operation. As a result of the difficulties encountered with tool distortion in the fourth operation, as explained in the Tenth Monthly Progress Report, no usable data was obtained, however, it was observed that the increased operating temperature, suggested at the end of the third operation, made the material much less susceptible to fracturing and capable of withstanding quite severe forming.

This completes Appendix B as work on a new lot of material will be reported in a separate section.

FABRICATION OF AN HK31A MAGNESIUM ALLOY AIRFRAME SKIN

CONTRACT NUMBER: DA-33-008-ORD-2084

PROCESSING STEPS IN FABRICATION OF THIRD LOT OF MATERIAL

Outline:

1. Review of Previous Results and Determination of New Thicknesses.
2. General Set-up and Operating Procedures.
3. First Operation.
4. Second Operation.
5. Third Operation.
6. Fourth Operation.

Section 1. Review of Previous Results and Determination of New Thicknesses.

The results obtained and reported in Appendix B were reviewed in order to determine the best set-up procedure to be followed in the fabricating steps on additional material. In trying to compare results of different operations, it became apparent that the manner in which control points had been selected for the various operations made it very difficult to reach any definite conclusions so that a direct comparison could be made.

A new set of control points was selected so that the points would correspond in all operations.

The new control points were selected as follows:

Point No.	1st Operation X_1	2nd Operation X_2	3rd Operation X_3	4th Operation X_4
1	1.068	1.512	2.030	2.750
5	1.916	3.068	4.570	6.750
9	2.705	4.547	7.044	10.750
13	3.428	5.937	9.439	14.750
17	4.159	7.306	11.747	18.750
21	4.917	8.665	13.953	22.750
25	5.693	9.999	16.035	26.750
29	6.477	11.286	17.965	30.750
33	7.261	12.498	19.694	34.750
37	8.065	13.669	21.293	38.750

In order to correlate the thicknesses obtained to the new control points, the thicknesses as reported in Appendix B for the various operations were averaged and interpolated to obtain a fairly good basis for comparison of the results to the desired thickness at the ten newly selected control points. Parts #6 through #14 were used as the basis for determining typical thicknesses for the first operation. Results from the second operation on parts 14, 9, 13, 10 and 5 were averaged, and the third operation results for parts 6, 11, 3, 14, 10 and 13 were averaged to obtain typical results.

The following comparison was obtained.

Point No.	First Operation		Second Operation		Third Operation	
	Desired	Actual	Desired	Actual	Desired	Actual
1	.225	.216	.149	.122	.098	.069
5	.218	.218	.140	.125	.090	.073
9	.212	.222	.132	.128	.082	.075
13	.206	.224	.125	.130	.076	.077
17	.214	.224	.135	.135	.085	.078
21	.223	.228	.146	.141	.096	.085
25	.233	.236	.160	.149	.110	.098
29	.245	.245	.176	.167	.127	.104
33	.264	.257	.202	.190	.156	.135
37	.268	.270	.211	.209	.167	.149

The average thickness values obtained are not meant to represent anything in the way of an accurate index of results, but they are of considerable value in determining corrective action to be taken in future set-ups. A study of the results compared to the desired thicknesses reveals that the first operation produced thicknesses very close to the desired thicknesses, while the second and third operations produced thicknesses less than desired with the ratio of desired thickness to actual thickness being greater in the third operation than in the second operation. Although no results were obtained from the fourth operation it can be assumed that in practice the ratio for the fourth operation would be even greater.

A review of the calculations made to determine the part configuration and thickness in each operation reveals both the possible source of the difficulty and corrective action to be taken. Although in the original calculations, in Appendix A, a blank thickness of .340 was used instead of .375 to provide an allowance of 9.3% for overthinning, the manner in which this allowance was applied was in error in that the total allowance was taken up in the first operation with no further allowance in the subsequent operations.

Since the thicknesses obtained in the first operation were very close to those desired, it appears that satisfactory results could be obtained if the same basic allowance was made for each operation. Such an allowance can be made when using a blank thickness of .500. A working ratio for determining new thicknesses for the

first three operations was determined as follows:

$$R^4 = .340/.500$$

$$R^4 = .680$$

$$R = .908$$

Using this ratio to establish a new set of thicknesses for the first three operations provides an allowance of 9.2% for overthinning at each operation. The effect of the application of this ratio can be illustrated by applying it to the blank thickness. For the first operation the effective blank thickness is .500 x .908 = .454. Continuing to apply the ratio the following effective thicknesses are obtained:

Effective thickness second operation = .454 x .908 = .412
Effective thickness third operation = .412 x .908 = .374
Effective thickness fourth operation = .374 x .908 = .340

While it might seem that all the calculations of Appendix A would have to be revised to incorporate the additional thinning allowance, the new thicknesses to be obtained in the first three operations can be determined very easily by applying the new ratio in the following manner:

New thickness in first operation = $T_1/.908^3$

New thickness in second operation = $T_2/.908^2$

New thickness in third operation = $T_3/.908$

By applying the new ratio to the thickness at the newly selected control points, the effect of using a thicker blank can readily be seen.

	First Operation		Second Operation		Third Operation	
Point No.	Original Thickness	New Thickness	Original Thickness	New Thickness	Original Thickness	New Thickness
1	.225	.301	.149	.181	.098	.108
5	.218	.292	.140	.170	.090	.099
9	.212	.283	.132	.160	.082	.090
13	.206	.275	.125	.152	.076	.084
17	.214	.286	.135	.164	.085	.093
21	.223	.298	.146	.177	.096	.106
25	.233	.311	.160	.194	.110	.121
29	.245	.327	.176	.213	.127	.140
33	.264	.350	.202	.245	.156	.172
37	.268	.358	.211	.256	.167	.184

Section 2. General Set-up and Operating Procedures.

The same set-up and operating procedures were used as outlined in Appendix B.

Section 3. First Operation

The set-up was made a duplicate of that used on the previous lot of material. A Bed angle of 14° was used with the roller set to provide a 5° clearance between the flat blank and the face of the roller. The roller had a 12-inch diameter with a 1/2 inch nose radius, and a 1-inch diameter stylus was used in the Tracer head. A spindle speed of 200 RPM and a feed rate of 2 inches per minute were used.

Parts No. 1, 2 and 3 were run utilizing the same basic method except that the roller gap settings were slightly less than desired on Part #1. The roller followed the finish configuration up to Point #17 where a plate was clamped to the template to permit the roller to continue out tangent to the contour. Upon completion of this spinning pass the plate was positioned parallel to center line at Point #37 on the template and the roller fed into the workpiece for a second spinning pass. These spinning passes are outlined on Figure 1-C.

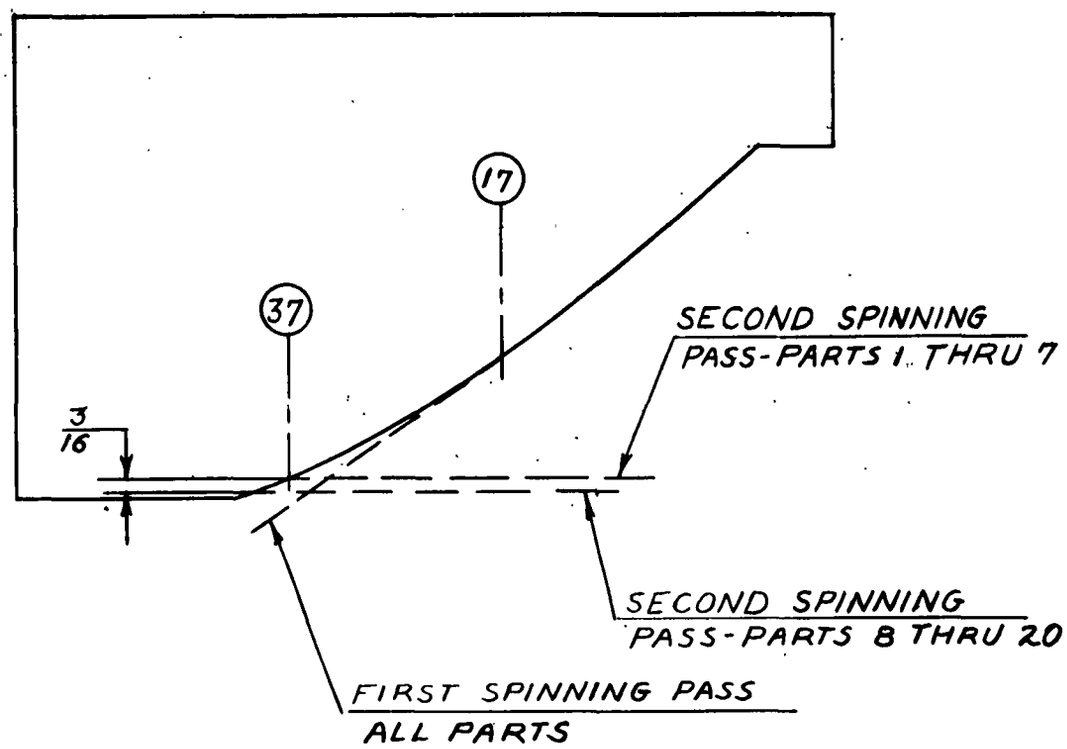

FIRST OPERATION PROCESSING
FIGURE 1-C

Following completion of the second spinning pass, the plate was removed from the template and the balance of the contour was Floturned from Point #17 to the end.

The same procedure was followed on Parts Nos. 4, 5, 6 and 7, except that some adjustment was made in the roller gap settings. Starting with Part #8, the second spinning pass was modified by setting the plate on the template 3/16 farther away from the center line and a final adjustment was made in the roller gap settings.

A detailed list of gap settings and resulting thicknesses obtained for all parts are given on the following pages. The thickness was checked at four points equally spaced around the part at each of the ten control points. Figure #2-C shows how these four points were located relative to the serial numbers stamped on the flat portion of the nose.

Following completion of all fabrication in the first operation, the large end of the parts was trimmed and the end diameters determined by the method outlined on Pages B-8 and B-9 of Appendix B.

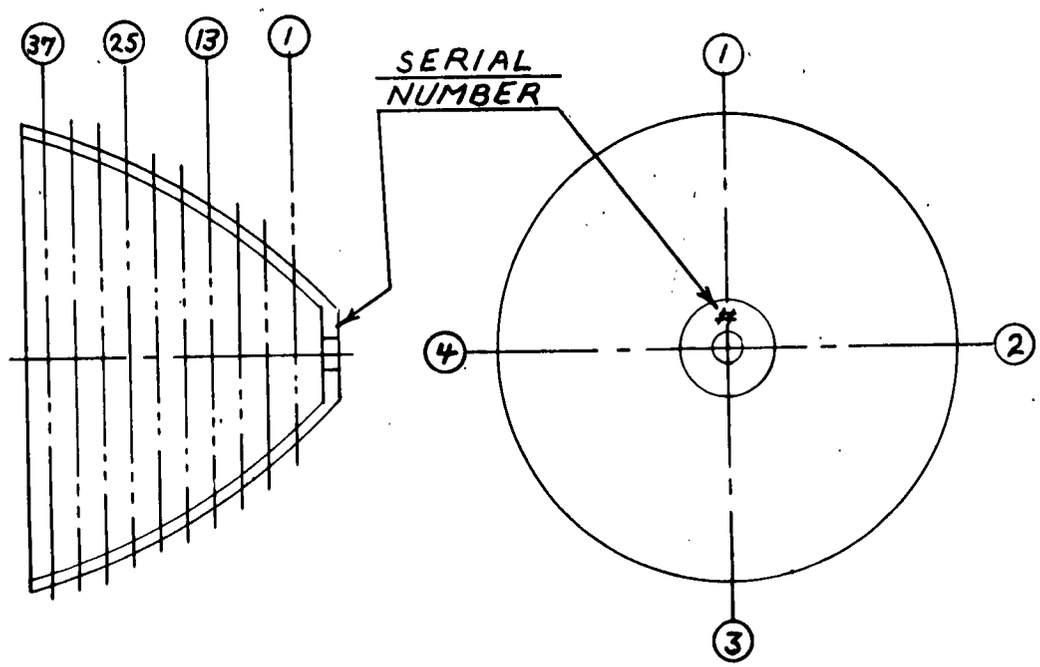

LOCATION OF THICKNESS GAGING POINTS
FIGURE 2-C

ROLLER SETTING AND THICKNESS RESULTS

FIRST OPERATION

PART #1

POINT NO.	ROLLER GAP SETTING		THICKNESS						
	DESIRED	ACTUAL	DESIRED	ACTUAL 1	2	3	4	AVG.	DEVIATION
1	.281	.276	.301	.302	.304	.303	.300	.302	+.001
5	.271	.269	.292	.289	.291	.290	.288	.289	-.003
9	.265	.257	.283	.276	.277	.277	.274	.276	-.007
13	.258	.255	.275	.273	.274	.272	.271	.272	-.003
17	.270	.267	.286	.275	.277	.274	.274	.275	-.011
21	.282	.280	.298	.295	.297	.298	.295	.296	-.002
25	.296	.287	.311	.302	.303	.304	.303	.303	-.008
29	.312	.298	.327	.321	.322	.323	.322	.322	-.005
33	.336	.334	.350	.349	.351	.352	.351	.351	+.001
37	.344	.346	.358	.362	.363	.364	.363	.363	+.005

PART #2

POINT NO.	ROLLER GAP SETTING		THICKNESS						
	DESIRED	ACTUAL	DESIRED	ACTUAL 1	2	3	4	AVG.	DEVIATION
1	.281	.280	.301	.291	.293	.292	.289	.291	-.010
5	.271	.272	.292	.280	.282	.281	.279	.280	-.012
9	.265	.265	.283	.270	.272	.271	.268	.270	-.013
13	.258	.259	.275	.266	.268	.267	.264	.266	-.009
17	.270	.270	.286	.287	.289	.289	.286	.288	+.002
21	.282	.283	.298	.288	.290	.291	.289	.289	-.009
25	.296	.298	.311	.302	.303	.304	.304	.303	-.008
29	.312	.312	.327	.322	.323	.324	.323	.323	-.004
33	.336	.337	.350	.344	.346	.348	.346	.346	-.004
37	.344	.347	.358	.358	.359	.361	.360	.359	+.001

PART #3

POINT NO.	ROLLER GAP SETTING		THICKNESS						
	DESIRED	ACTUAL	DESIRED	ACTUAL 1	2	3	4	AVG.	DEVIATION
1	.281	.283	.301	.292	.295	.292	.290	.292	-.009
5	.271	.273	.292	.281	.283	.282	.280	.281	-.010
9	.265	.265	.283	.273	.273	.271	.270	.272	-.011
13	.258	.259	.275	.267	.268	.265	.265	.266	-.009
17	.270	.269	.286	.280	.282	.283	.278	.281	-.005
21	.282	.283	.298	.284	.285	.286	.284	.285	-.013
25	.296	.298	.311	.304	.305	.306	.306	.305	-.006
29	.312	.313	.327	.319	.322	.322	.323	.321	-.006
33	.336	.337	.350	.346	.346	.348	.346	.346	-.004
37	.344	.345	.358	.363	.362	.364	.363	.363	+.005

ROLLER SETTING AND THICKNESS RESULTS

FIRST OPERATION

PART #4

POINT NO.	ROLLER GAP SETTING		THICKNESS						
	DESIRED	ACTUAL	DESIRED	ACTUAL 1	2	3	4	AVG.	DEVIATION
1	.292	.293	.301	.306	.304	.307	.309	.306	+.005
5	.281	.283	.292	.291	.289	.291	.293	.291	-.001
9	.274	.273	.283	.281	.280	.281	.282	.281	-.002
13	.266	.265	.275	.273	.270	.272	.272	.272	-.003
17	.277	.275	.286	.281	.281	.282	.283	.282	-.004
21	.287	.286	.298	.293	.292	.293	.293	.293	-.005
25	.300	.301	.311	.305	.305	.304	.304	.304	-.007
29	.315	.312	.327	.321	.320	.320	.319	.320	-.007
33	.338	.338	.350	.344	.343	.343	.342	.343	-.007
37	.344	.349	.358	.356	.360	.360	.361	.359	+.001

PART #5

POINT NO.	ROLLER GAP SETTING		THICKNESS						
	DESIRED	ACTUAL	DESIRED	ACTUAL 1	2	3	4	AVG.	DEVIATION
1	.292	.293	.301	.303	.306	.309	.306	.306	+.005
5	.282	.284	.292	.293	.294	.296	.293	.294	+.002
9	.276	.275	.283	.278	.280	.282	.281	.280	-.003
13	.269	.268	.275	.272	.274	.277	.273	.274	-.001
17	.281	.279	.286	.285	.287	.286	.285	.286	.000
21	.292	.291	.298	.294	.295	.294	.292	.294	-.004
25	.306	.307	.311	.313	.315	.313	.312	.313	+.002
29	.322	.320	.327	.333	.331	.329	.328	.330	+.003
33	.346	.345	.350	.354	.354	.353	.352	.353	+.003
37	.353	.354	.358	.370	.369	.367	.367	.368	+.010

PART #6

POINT NO.	ROLLER GAP SETTING		THICKNESS						
	DESIRED	ACTUAL	DESIRED	ACTUAL 1	2	3	4	AVG.	DEVIATION
1	.292	.290	.301	.300	.302	.302	.300	.301	.000
5	.282	.283	.292	.289	.290	.290	.288	.289	-.003
9	.276	.273	.283	.277	.278	.278	.276	.277	-.006
13	.269	.267	.275	.272	.273	.273	.272	.272	-.003
17	.281	.277	.286	.282	.283	.284	.284	.283	-.003
21	.292	.293	.298	.298	.297	.295	.298	.297	-.001
25	.306	.308	.311	.311	.315	.315	.315	.314	+.003
29	.322	.319	.327	.335	.333	.332	.331	.333	+.006
33	.346	.346	.350	.359	.358	.356	.357	.357	+.007
37	.353	.355	.358	.378	.376	.374	.376	.376	+.018

ROLLER SETTING AND THICKNESS RESULTS

FIRST OPERATION

PART #7

POINT NO.	ROLLER GAP SETTING		THICKNESS						
	DESIRED	ACTUAL	DESIRED	ACTUAL 1	2	3	4	AVG.	DEVIATION
1	.294	.294	.301	.304	.302	.299	.301	.301	.000
5	.284	.285	.292	.291	.289	.287	.288	.289	-.003
9	.275	.275	.283	.280	.278	.276	.277	.278	-.005
13	.268	.267	.275	.271	.269	.268	.269	.269	-.006
17	.279	.278	.286	.282	.282	.278	.278	.280	-.006
21	.292	.290	.298	.292	.292	.291	.289	.291	-.007
25	.305	.305	.311	.311	.309	.308	.310	.309	-.002
29	.319	.318	.327	.329	.328	.325	.328	.327	.000
33	.341	.343	.350	.354	.353	.351	.351	.352	+.002
37	.349	.352	.358	.369	.368	.364	.368	.367	+.009

PART #8

POINT NO.	ROLLER GAP SETTING		THICKNESS						
	DESIRED	ACTUAL	DESIRED	ACTUAL 1	2	3	4	AVG.	DEVIATION
1	.299	.299	.301	.308	.306	.304	.305	.306	+.005
5	.289	.290	.292	.296	.294	.292	.293	.294	+.002
9	.280	.280	.283	.286	.283	.281	.283	.283	.000
13	.273	.273	.275	.276	.275	.273	.274	.274	-.001
17	.284	.282	.286	.285	.284	.282	.284	.284	-.002
21	.297	.295	.298	.304	.302	.300	.302	.302	+.004
25	.310	.311	.311	.314	.312	.312	.313	.313	+.002
29	.324	.324	.327	.331	.328	.326	.329	.328	+.001
33	.346	.349	.350	.355	.354	.351	.353	.353	+.003
37	.354	.358	.358	.369	.368	.366	.367	.367	+.009

PART #9

POINT NO.	ROLLER GAP SETTING		THICKNESS						
	DESIRED	ACTUAL	DESIRED	ACTUAL 1	2	3	4	AVG.	DEVIATION
1	.299	.299	.301	.306	.303	.301	.304	.303	+.002
5	.289	.287	.292	.293	.291	.289	.292	.291	-.001
9	.280	.278	.283	.281	.280	.278	.280	.280	-.003
13	.273	.271	.275	.273	.272	.270	.272	.272	-.003
17	.284	.283	.286	.280	.279	.279	.281	.280	-.006
21	.297	.295	.298	.296	.296	.294	.295	.295	-.003
25	.310	.309	.311	.312	.310	.309	.311	.310	-.001
29	.324	.323	.327	.328	.325	.324	.325	.325	-.002
33	.346	.349	.350	.353	.352	.350	.351	.351	+.001
37	.354	.358	.358	.366	.364	.362	.364	.364	+.006

ROLLER SETTING AND THICKNESS RESULTS

FIRST OPERATION

PART #10

POINT NO.	ROLLER GAP SETTING		THICKNESS						
	DESIRED	ACTUAL	DESIRED	ACTUAL 1	2	3	4	AVG.	DEVIATION
1	.299	.299	.301	.311	.308	.306	.309	.308	+.007
5	.289	.289	.292	.297	.294	.293	.296	.295	+.003
9	.280	.279	.283	.285	.283	.281	.284	.283	.000
13	.273	.272	.275	.277	.276	.274	.276	.276	+.001
17	.284	.281	.286	.285	.284	.283	.284	.284	-.002
21	.297	.292	.298	.300	.298	.296	.298	.298	.000
25	.310	.306	.311	.315	.313	.311	.312	.313	+.002
29	.324	.322	.327	.329	.329	.326	.328	.328	+.001
33	.346	.346	.350	.354	.354	.352	.354	.353	+.003
37	.354	.356	.358	.368	.367	.365	.369	.367	+.009

PART #11

POINT NO.	ROLLER GAP SETTING		THICKNESS						
	DESIRED	ACTUAL	DESIRED	ACTUAL 1	2	3	4	AVG.	DEVIATION
1	.299	.300	.301	.306	.307	.308	.306	.307	+.006
5	.289	.290	.292	.295	.296	.297	.295	.296	+.004
9	.280	.280	.283	.283	.284	.286	.284	.284	+.001
13	.273	.274	.275	.275	.276	.277	.275	.276	+.001
17	.284	.284	.286	.285	.285	.287	.285	.285	-.001
21	.297	.296	.298	.290	.291	.292	.290	.291	-.007
25	.310	.311	.311	.312	.312	.314	.313	.313	+.002
29	.324	.324	.327	.330	.332	.333	.332	.332	+.005
33	.346	.349	.350	.355	.356	.357	.355	.356	+.006
37	.354	.357	.358	.370	.371	.370	.370	.370	+.012

PART #12

POINT NO.	ROLLER GAP SETTING		THICKNESS						
	DESIRED	ACTUAL	DESIRED	ACTUAL 1	2	3	4	AVG.	DEVIATION
1	.299	.299	.301	.310	.312	.312	.309	.311	+.010
5	.289	.288	.292	.295	.297	.298	.295	.296	+.004
9	.280	.279	.283	.283	.284	.286	.283	.284	+.001
13	.273	.270	.275	.277	.279	.279	.277	.278	+.003
17	.284	.281	.286	.285	.287	.288	.285	.286	.000
21	.297	.294	.298	.294	.295	.296	.295	.295	-.003
25	.310	.308	.311	.312	.314	.314	.312	.313	+.002
29	.324	.321	.327	.329	.331	.332	.329	.330	+.003
33	.346	.346	.350	.354	.356	.355	.354	.355	+.005
37	.354	.356	.358	.366	.369	.368	.369	.368	+.010

ROLLER SETTING AND THICKNESS RESULTS

FIRST OPERATION

PART #13

POINT NO.	ROLLER GAP SETTING		THICKNESS						
	DESIRED	ACTUAL	DESIRED	ACTUAL 1	2	3	4	AVG.	DEVIATION
1	.299	.301	.301	.314	.315	.315	.313	.314	+.013
5	.289	.291	.292	.301	.302	.303	.301	.302	+.010
9	.280	.282	.283	.289	.291	.291	.289	.290	+.007
13	.273	.274	.275	.280	.282	.282	.280	.281	+.006
17	.284	.284	.286	.288	.289	.291	.289	.289	+.003
21	.297	.295	.298	.300	.301	.300	.299	.300	+.002
25	.310	.311	.311	.315	.317	.317	.315	.316	+.005
29	.324	.323	.327	.330	.332	.333	.331	.331	+.004
33	.346	.349	.350	.363	.365	.365	.363	.364	+.014
37	.354	.358	.358	.379	.381	.381	.378	.380	+.022

PART #14

POINT NO.	ROLLER GAP SETTING		THICKNESS						
	DESIRED	ACTUAL	DESIRED	ACTUAL 1	2	3	4	AVG.	DEVIATION
1	.299	.302	.301	.310	.311	.311	.311	.311	+.010
5	.289	.291	.292	.298	.299	.300	.298	.299	+.007
9	.280	.281	.283	.285	.287	.288	.287	.287	+.004
13	.273	.274	.275	.275	.278	.279	.278	.277	+.002
17	.284	.282	.286	.286	.288	.289	.287	.287	+.001
21	.297	.296	.298	.302	.303	.305	.303	.303	+.005
25	.310	.309	.311	.314	.316	.316	.314	.315	+.004
29	.324	.323	.327	.331	.333	.333	.331	.332	+.005
33	.346	.348	.350	.356	.358	.358	.355	.357	+.007
37	.354	.357	.358	.373	.373	.372	.372	.372	+.014

PART #15

POINT NO.	ROLLER GAP SETTING		THICKNESS						
	DESIRED	ACTUAL	DESIRED	ACTUAL 1	2	3	4	AVG.	DEVIATION
1	.299	.299	.301	.310	.312	.312	.310	.311	+.010
5	.289	.288	.292	.298	.298	.299	.297	.298	+.006
9	.280	.279	.283	.286	.287	.289	.286	.287	+.004
13	.273	.272	.275	.277	.279	.280	.277	.278	+.003
17	.284	.282	.286	.287	.288	.288	.287	.287	+.001
21	.297	.293	.298	.298	.300	.301	.300	.300	+.002
25	.310	.309	.311	.314	.316	.317	.315	.315	+.004
29	.324	.321	.327	.328	.329	.331	.331	.330	+.003
33	.346	.348	.350	.356	.358	.358	.357	.357	+.007
37	.354	.356	.358	.371	.374	.375	.372	.373	+.015

ROLLER SETTING AND THICKNESS RESULTS

FIRST OPERATION

PART #16

POINT NO.	ROLLER GAP SETTING		THICKNESS						
	DESIRED	ACTUAL	DESIRED	ACTUAL 1	2	3	4	AVG.	DEVIATION
1	.299	.301	.301	.313	.314	.314	.312	.313	+.012
5	.289	.290	.292	.299	.301	.301	.300	.300	+.008
9	.280	.281	.283	.288	.289	.290	.289	.289	+.006
13	.273	.273	.275	.281	.281	.282	.281	.281	+.006
17	.284	.284	.286	.289	.291	.291	.290	.290	+.004
21	.297	.296	.298	.310	.311	.310	.311	.310	+.012
25	.310	.311	.311	.314	.316	.316	.315	.315	+.004
29	.324	.323	.327	.330	.331	.333	.332	.331	+.004
33	.346	.350	.350	.356	.359	.360	.358	.358	+.008
37	.354	.359	.358	.376	.375	.376	.374	.375	+.017

PART #17

POINT NO.	ROLLER GAP SETTING		THICKNESS						
	DESIRED	ACTUAL	DESIRED	ACTUAL 1	2	3	4	AVG.	DEVIATION
1	.299	.301	.301	.310	.311	.312	.311	.311	+.010
5	.289	.291	.292	.296	.298	.299	.297	.297	+.005
9	.280	.283	.283	.285	.287	.288	.286	.286	+.003
13	.273	.274	.275	.279	.279	.280	.279	.279	+.004
17	.284	.285	.286	.288	.289	.291	.290	.289	+.003
21	.297	.297	.298	.299	.299	.300	.299	.299	+.001
25	.310	.312	.311	.316	.318	.317	.314	.316	+.005
29	.324	.323	.327	.333	.333	.332	.331	.332	+.005
33	.346	.350	.350	.355	.357	.357	.355	.356	+.006
37	.354	.359	.358	.371	.371	.370	.370	.370	+.012

PART #18

POINT NO.	ROLLER GAP SETTING		THICKNESS						
	DESIRED	ACTUAL	DESIRED	ACTUAL 1	2	3	4	AVG.	DEVIATION
1	.299	.297	.301	.307	.308	.309	.307	.308	+.007
5	.289	.287	.292	.294	.295	.296	.295	.295	+.003
9	.280	.278	.283	.283	.284	.285	.283	.284	+.001
13	.273	.271	.275	.274	.275	.277	.274	.275	.000
17	.284	.280	.286	.283	.284	.284	.283	.283	-.003
21	.297	.294	.298	.298	.297	.296	.297	.297	-.001
25	.310	.309	.311	.312	.313	.312	.312	.312	+.001
29	.324	.322	.327	.329	.332	.330	.329	.330	+.003
33	.346	.348	.350	.354	.354	.353	.352	.353	+.003
37	.354	.362	.356	.369	.368	.368	.366	.368	+.012

ROLLER SETTING AND THICKNESS RESULTS

FIRST OPERATION

PART #19

POINT NO.	ROLLER GAP SETTING		THICKNESS						
	DESIRED	ACTUAL	DESIRED	ACTUAL 1	2	3	4	AVG.	DEVIATION
1	.299	.300	.301	.310	.312	.312	.310	.311	+.010
5	.289	.289	.292	.297	.298	.299	.297	.298	+.006
9	.280	.279	.283	.284	.285	.286	.284	.285	+.002
13	.273	.272	.275	.277	.278	.278	.277	.277	+.002
17	.284	.282	.286	.286	.286	.286	.286	.286	.000
21	.297	.293	.298	.292	.293	.294	.293	.293	-.005
25	.310	.308	.311	.308	.311	.308	.307	.308	-.003
29	.324	.321	.327	.328	.329	.327	.326	.327	.000
33	.346	.345	.350	.352	.353	.351	.351	.352	+.002
37	.354	.356	.358	.367	.367	.368	.364	.366	+.008

PART #20

POINT NO.	ROLLER GAP SETTING		THICKNESS						
	DESIRED	ACTUAL	DESIRED	ACTUAL 1	2	3	4	AVG.	DEVIATION
1	.299	.300	.301	.310	.313	.313	.311	.312	+.011
5	.289	.289	.292	.297	.299	.299	.298	.298	+.006
9	.280	.279	.283	.285	.286	.287	.284	.285	+.002
13	.273	.271	.275	.276	.277	.278	.276	.277	+.002
17	.284	.282	.286	.283	.285	.284	.283	.284	-.002
21	.297	.294	.298	.297	.300	.300	.297	.298	.000
25	.310	.308	.311	.312	.314	.313	.311	.312	+.001
29	.324	.322	.327	.329	.330	.327	.326	.328	+.001
33	.346	.348	.350	.352	.353	.352	.351	.352	+.002
37	.354	.357	.358	.369	.372	.370	.370	.370	+.012

DIAMETERS AT POINT #37

FIRST OPERATION

See Appendix B page B-8 for method of determining diameter.

		PART NUMBER				
		1	2	3	4	5
1.	A	15.041	14.968	14.965	14.928	14.971
	B	14.832	14.774	14.781	14.770	14.792
2.	A	15.042	14.978	14.966	14.931	14.970
	B	14.832	14.785	14.782	14.768	14.789
3.	A	15.034	14.974	14.968	14.926	14.971
	B	14.820	14.785	14.787	14.765	14.794
4.	A	15.044	14.970	14.966	14.929	14.969
	B	14.833	14.787	14.786	14.769	14.795
Average	A	15.040	14.973	14.966	14.928	14.970
	B	14.829	14.783	14.784	14.768	14.792
O.D.		14.618	14.593	14.602	14.608	14.614
Thickness Pt.37		.363	.359	.363	.359	.368
Radial Thickness		.369	.365	.369	.365	.374
I.D.		13.880	13.863	13.864	13.878	13.866

		PART NUMBER				
		6	7	8	9	10
1.	A	14.956	14.988	15.039	15.027	15.028
	B	14.796	14.801	14.841	14.827	14.837
2.	A	14.957	14.992	15.037	15.027	15.032
	B	14.797	14.803	14.840	14.827	14.837
3.	A	14.959	14.993	15.038	15.026	15.032
	B	14.797	14.804	14.837	14.826	14.837
4.	A	14.955	14.990	15.038	15.027	15.028
	B	14.793	14.801	14.834	14.826	14.832
Average	A	14.957	14.990	15.038	15.027	15.030
	B	14.796	14.802	14.838	14.827	14.836
O.D.		14.635	14.614	14.638	14.627	14.642
Thickness Pt.37		.376	.367	.367	.364	.367
Radial Thickness		.382	.373	.373	.370	.373
I.D.		13.871	13.868	13.892	13.887	13.896

PART NUMBER

		11	12	13	14	15
1.	A	15.043	15.039	15.045	15.034	15.130
	B	14.845	14.838	14.849	14.845	14.896
2.	A	15.044	15.042	15.042	15.037	15.118
	B	14.847	14.842	14.848	14.845	14.885
3.	A	15.045	15.043	15.047	15.031	15.121
	B	14.850	14.841	14.853	14.843	14.881
4.	A	15.046	15.039	15.048	15.037	15.123
	B	14.850	14.836	14.853	14.846	14.882
Average	A	15.044	15.041	15.045	15.035	15.123
	B	14.848	14.839	14.851	14.845	14.886
O.D.		14.652	14.637	14.657	14.655	14.649
Thickness Pt.37		.370	.368	.380	.372	.373
Radial Thickness		.376	.374	.386	.378	.379
I.D.		13.900	13.889	13.885	13.899	13.891

		PART NUMBER				
		16	17	18	19	20
1.	A	14.980	15.044	15.039	15.041	15.029
	B	14.832	14.850	14.837	14.843	14.832
2.	A	14.976	15.045	15.046	15.041	15.024
	B	14.828	14.851	14.842	14.843	14.831
3.	A	14.978	15.049	15.047	15.041	15.025
	B	14.830	14.850	14.842	14.842	14.831
4.	A	14.979	15.052	15.045	15.042	15.029
	B	14.827	14.850	14.839	14.842	14.831
Average	A	14.978	15.048	15.044	15.041	15.027
	B	14.829	14.850	14.840	15.843	14.831
O.D.		14.680	14.652	14.636	14.645	14.635
Thickness Pt.37		.374	.370	.368	.367	.370
Radial Thickness		.380	.376	.374	.373	.376
I.D.		13.920	13.900	13.888	13.899	13.883

Section 4. Second Operation

The second operation arbor was mounted in a No. 40 x 24 Floturn Machine. The bed was set parallel to center line and the new template made as described in Appendix B was used. A 12-inch diameter roller with a 1/8 inch nose radius and 45° lead angle was used. The roller swivel block was set 6° counter-clockwise, resulting in an effective angle of 51° from center line to face of roller. A spindle speed of 200 RPM and a feed rate of 2 inches per minute were used.

In order to avoid any problems in maintaining correct machine settings at the end of the part for the offset section and throughout the entire length of the part, it was decided to form the offset section in a preliminary operation. It was felt that it would not be desirable to form the offset section on all of the parts without completing work on some of them to make sure that the preliminary operation was done satisfactorily. The first five parts were put through the preliminary operation, and then attempts were made to form the rest of the configuration on these five parts.

After setting the noses on the first five parts, initial gap settings were established for Part #1. The gaps selected for Part #1 were too small so that the part broke at approximately Point #9 and was thin up to that point.

Before starting on Part #2, the gap settings were modified and a preliminary method of spinning the outer portion of the part established. The thicknesses obtained were checked immediately upon completion of the first eight parts and adjustments made in the gap settings to obtain the best results. Pts. #9 through #20 were run with consistent gap settings as indicated on the following sheets.

The method of spinning the outer portion of the part was modified several times as outlined on Figures 3-C through 8-C, with the final method utilized on Parts #11 through #20.

All parts were processed by Floturning to the first point number indicated, spinning the outer portion of the part, and then Floturning the balance of the part. The various methods of spinning the outer portion of the part were tried in order to establish the best method that would gather sufficient material to maintain thickness and to reduce the diameter of the large portion of the part to the required diameter. If the spinning passes were made too far from center line, the parts were not reduced in diameter sufficiently while if the spinning passes were made too close to center line, the material would be thinned excessively and tended to develop surface fractures as it was pulled in too rapidly by the roller.

The final processing seemed to give the best combination of properties. The diameter was not reduced as much as was desired. However, attempts to make the part smaller resulted in creation of surface fractures.

The following is a summary of the processing and results on the parts in the second operation.

Part #2: Processed as indicated in Figure 3-C. An error was made in making settings for final Floturning of the large end of the part so that the resulting thickness was excessive.

Part #3: Processed the same as Part #2 with correct settings for Floturning. Part excessively large at big end and pitted on the outside due

to material building up ahead of roller when Floturning large end.

Part #4: Processed as indicated in Figure 4-C. Spinning passes too heavy resulting in many surface fractures and splitting just short of the trim line. Large diameter could not be determined.

Part #5: Processed as indicated in Figure 5-C. Part seemed to be fairly good except for being thin from Point 21 to Point 28.

Part #6: Processed the same as Part #5. Part smaller in diameter than Part #5 and thinner. Indications were observed that first spinning pass was too light and, as a result, the second spinning pass too heavy. Some flaking and pitting on outer surface.

Part #7: Processed as indicated in Figure 6-C. Part pitted.

Part #8: Processed the same as Part #7 except for modification of gap settings. Build-up ahead of roller when Floturning from Point #29 to end. Pitted surface from Point #29 to end.

Part #9: Processed the same as Part #8 with additional modification of gap settings. Results not consistent as the internal heating rods in the arbor were inadvertently shut off at the start of processing, resulting in the arbor cooling off during running, thereby causing an increase in gap settings and excessive thickness.

Part #10: Processed as indicated in Figure 7-C. Part split at approximately Point #35 during final Floturning.

Part #11 through Part #20: Processed as indicated in Figure 8-C with generally consistent results.

The variation in end diameter is attributed to variations in the temperature of the arbor from one part to another and the resultant variation in effective size due to varying amounts of expansion.

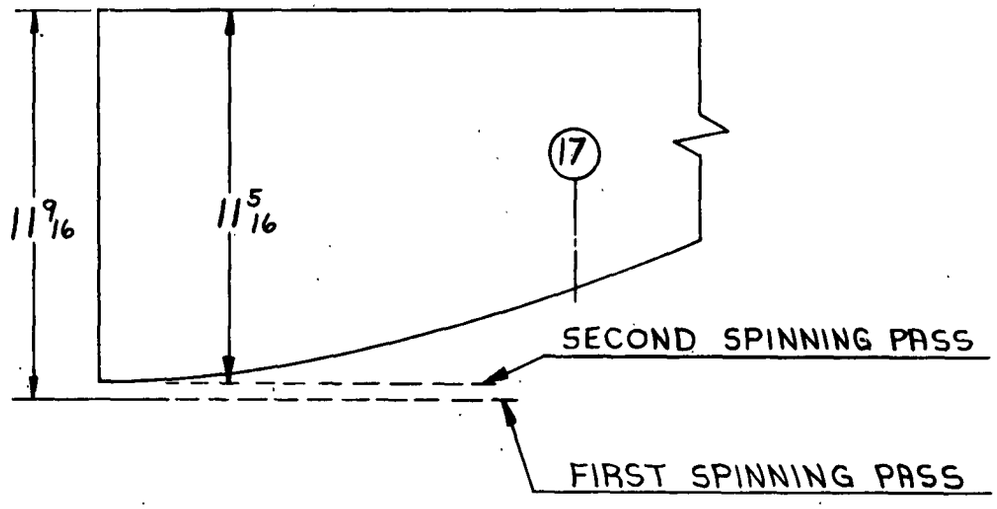

SECOND OPERATION PROCESSING
PART #2 + PART # 3

FIGURE C-3

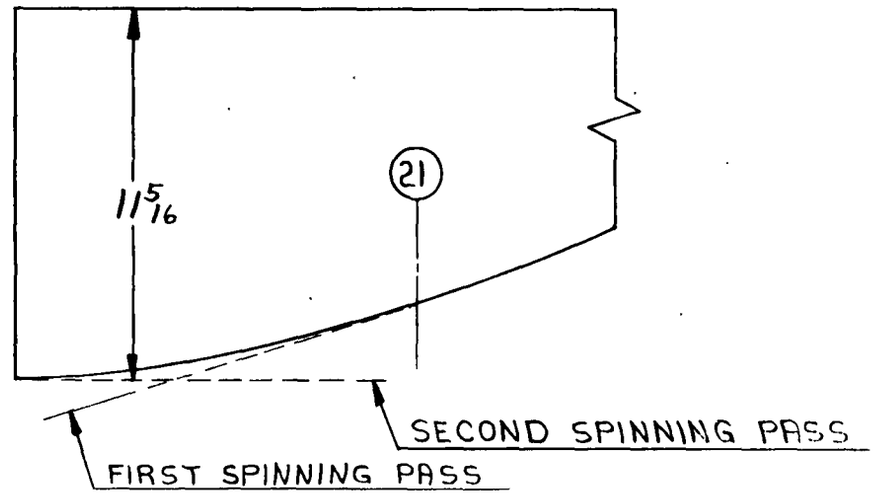

SECOND OPERATION PROCESSING
PART # 4

FIGURE C-4

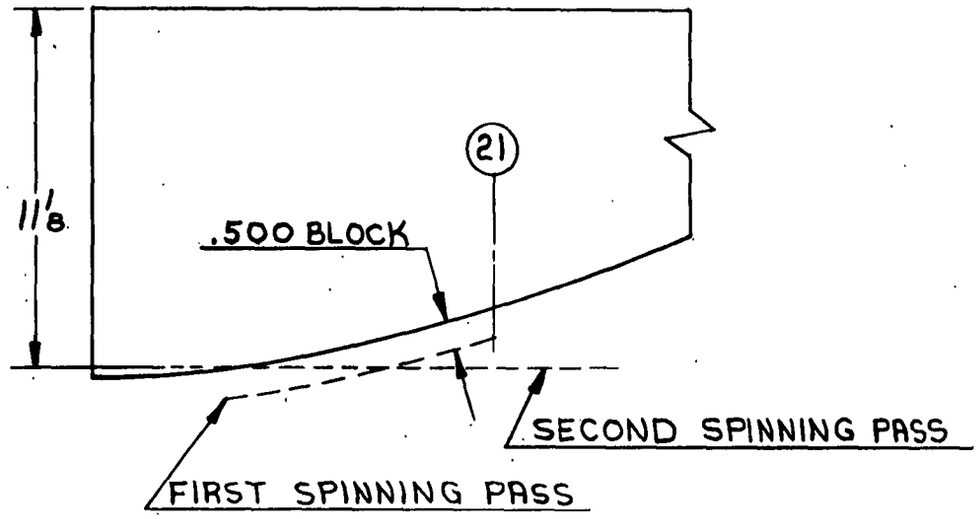

SECOND OPERATION PROCESSING
PART #5 + PART #6

FIGURE C-5

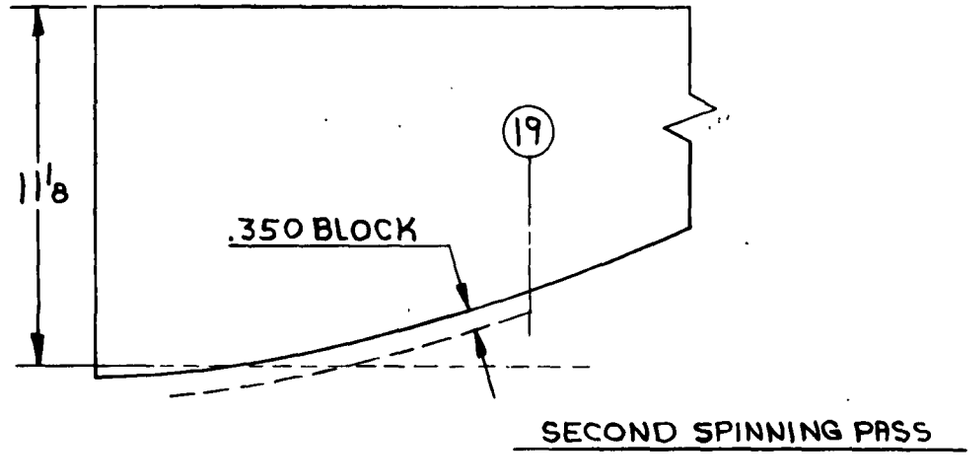

SECOND OPERATION PROCESSING
PART #7 - #8 + #9

FIGURE C-6

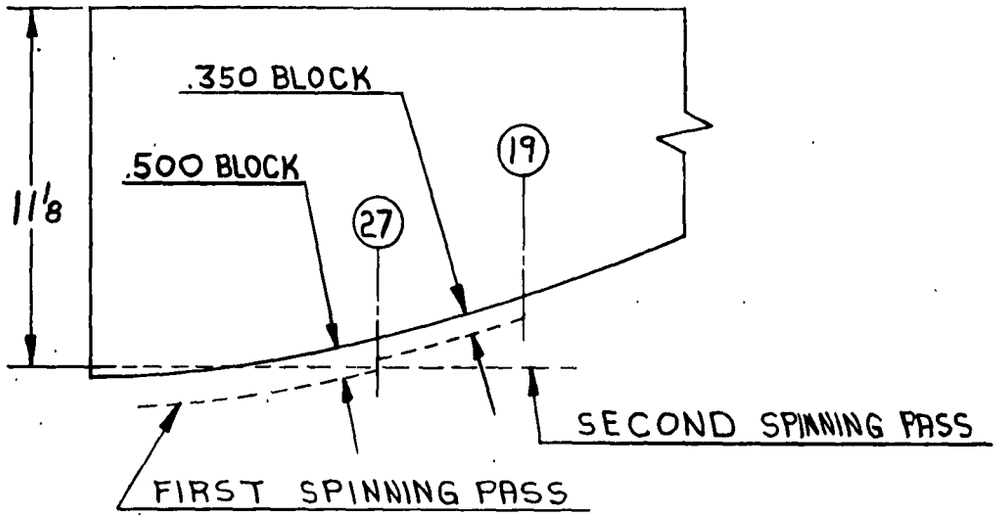

SECOND OPERATION PROCESSING
PART # 10

FIGURE C-7

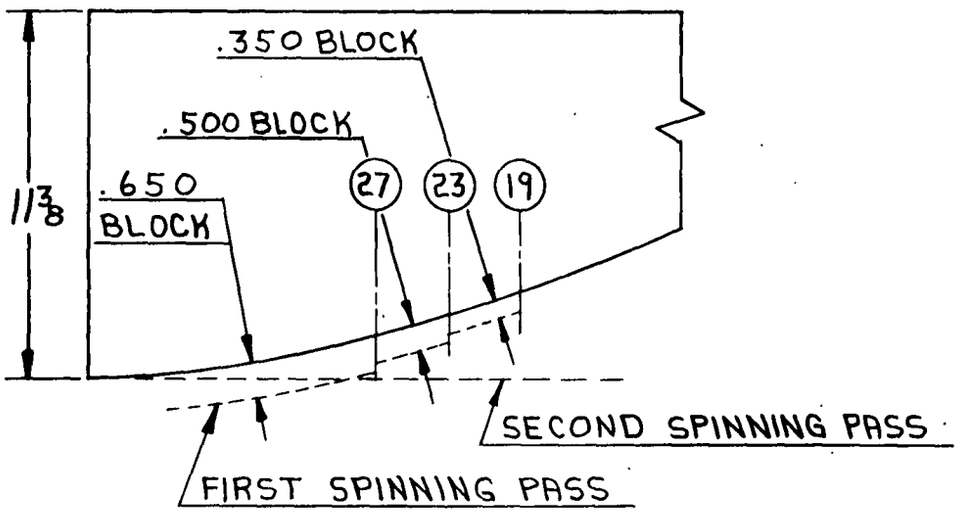

SECOND OPERATION PROCESSING
PARTS #11 THRU #20

FIGURE C-8

ROLLER SETTING AND THICKNESS RESULTS

SECOND OPERATION

PART #1

POINT NO.	ROLLER GAP SETTING		THICKNESS						
	DESIRED	ACTUAL	DESIRED	ACTUAL 1	2	3	4	AVG.	DEVIATION
1	.163	.164	.181	.175	.174	.173	.173	.174	-.007
5	.153	.157	.170	.166	.165	.164	.165	.165	-.005
9	.144	.146	.160	.151	.150			.150	-.010
13	.137	.138	.152						
17	.150	.151	.164						
21	.163	.165	.177						
25	.181	.181	.194						
29	.200	.200	.213						
33	.233	.233	.245						
37	.244	.243	.256						

PART #2

POINT NO.	ROLLER GAP SETTING		THICKNESS						
	DESIRED	ACTUAL	DESIRED	ACTUAL 1	2	3	4	AVG.	DEVIATION
1	.171	.170	.181	.180	.180	.183	.177	.180	-.001
5	.161	.164	.170	.173	.174	.172	.171	.172	+.002
9	.152	.153	.160	.161	.161	.161	.160	.161	+.001
13	.145	.147	.152	.151	.151	.150	.150	.150	-.002
17	.158	.161	.164	.164	.164	.166	.165	.165	+.001
21	.171	.175	.177	.202	.201	.200	.199	.200	+.023
25	.189	.192	.194	.213	.212	.212	.213	.212	+.018
29	.208	.212	.213	.230	.229	.230	.230	.230	+.017
33	.241	.244	.245	.263	.263	.264	.264	.263	+.018
37	.252	.255	.256	.276	.277	.276	.275	.276	+.020

PART #3

POINT NO.	ROLLER GAP SETTING		THICKNESS						
	DESIRED	ACTUAL	DESIRED	ACTUAL 1	2	3	4	AVG.	DEVIATION
1	.171	.170	.181	.176	.175	.174	.175	.175	-.006
5	.161	.164	.170	.170	.169	.168	.168	.168	-.002
9	.152	.153	.160	.158	.157	.156	.156	.157	-.003
13	.145	.147	.152	.149	.149	.148	.147	.148	-.004
17	.156	.161	.164	.163	.162	.162	.161	.162	-.002
21	.171	.175	.177	.173	.173	.173	.171	.172	-.005
25	.189	.192	.194	.193	.192	.192	.191	.192	-.002
29	.208	.211	.213	.212	.212	.211	.211	.211	-.002
33	.241	.242	.245	.245	.245	.245	.245	.245	.000
37	.252	.254	.256	.254	.254	.254	.254	.254	-.002

ROLLER SETTING AND THICKNESS RESULTS

SECOND OPERATION

PART #4

POINT NO.	ROLLER GAP SETTING		THICKNESS						
			DESIRED	ACTUAL				AVG.	DEVIATION
	DESIRED	ACTUAL		1	2	3	4		
1	.175	.176	.181	.182	.182	.181	.181	.181	.000
5	.161	.168	.170	.173	.173	.172	.172	.172	+.002
9	.152	.157	.160	.160	.161	.160	.159	.160	.000
13	.145	.149	.152	.152	.152	.152	.151	.152	.000
17	.156	.163	.164	.164	.163	.164	.163	.163	-.001
21	.171	.176	.177	.178	.178	.176	.178	.177	.000
25	.189	.193	.194	.201	.200	.202	.204	.202	+.008
29	.208	.212	.213	.219	.218	.217	.218	.218	+.005
33	.241	.242	.245	.249	.248	.247	.247	.248	+.003
37	.252	.250	.256	.259	.259	.259	.259	.259	+.003

PART #5

POINT NO.	ROLLER GAP SETTING		THICKNESS						
			DESIRED	ACTUAL				AVG.	DEVIATION
	DESIRED	ACTUAL		1	2	3	4		
1	.175	.174	.181	.182	.182	.182	.181	.182	+.001
5	.161	.167	.170	.174	.173	.173	.173	.173	+.003
9	.152	.156	.160	.161	.162	.161	.161	.161	+.001
13	.145	.148	.152	.151	.150	.151	.150	.150	-.002
17	.156	.162	.164	.161	.161	.161	.161	.161	-.003
21	.171	.175	.177	.173	.173	.173	.171	.172	-.005
25	.189	.191	.194	.186	.185	.185	.186	.185	-.009
29	.208	.210	.213	.209	.208	.207	.209	.208	-.005
33	.241	.241	.245	.244	.244	.244	.243	.244	-.001
37	.252	.253	.256	.257	.256	.256	.256	.256	.000

PART #6

POINT NO.	ROLLER GAP SETTING		THICKNESS						
			DESIRED	ACTUAL				AVG.	DEVIATION
	DESIRED	ACTUAL		1	2	3	4		
1	.170	.170	.181	.182	.182	.181	.182	.182	+.001
5	.160	.162	.170	.171	.170	.170	.170	.170	.000
9	.150	.150	.160	.158	.157	.157	.158	.157	-.003
13	.143	.143	.152	.148	.147	.147	.147	.147	-.005
17	.155	.156	.164	.159	.159	.159	.158	.159	-.005
21	.168	.169	.177	.166	.167	.167	.167	.167	-.010
25	.185	.186	.194	.183	.184	.182	.182	.183	-.011
29	.204	.205	.213	.202	.200	.201	.199	.200	-.013
33	.236	.237	.245	.234	.234	.235	.233	.234	-.011
37	.247	.249	.256	.246	.246	.244	.245	.245	-.011

ROLLER SETTING AND THICKNESS RESULTS

SECOND OPERATION

PART #7

POINT NO.	ROLLER GAP SETTING		THICKNESS						
	DESIRED	ACTUAL	DESIRED	ACTUAL 1	2	3	4	AVG.	DEVIATION
1	.175	.175	.181	.186	.185	.184	.186	.185	+.004
5	.166	.168	.170	.175	.174	.173	.174	.174	+.004
9	.156	.156	.160	.161	.161	.160	.161	.161	+.001
13	.150	.149	.152	.152	.151	.150	.151	.151	-.001
17	.162	.163	.164	.163	.162	.161	.163	.162	-.002
21	.176	.176	.177	.175	.174	.174	.175	.174	-.003
25	.193	.192	.194	.192	.193	.190	.192	.192	-.002
29	.213	.211	.213	.210	.210	.209	.210	.210	-.003
33	.245	.244	.245	.241	.243	.242	.242	.242	-.003
37	.257	.257	.256	.255	.254	.256	.253	.254	-.002

PART #8

POINT NO.	ROLLER GAP SETTING		THICKNESS						
	DESIRED	ACTUAL	DESIRED	ACTUAL 1	2	3	4	AVG.	DEVIATION
1	.171	.171	.181	.177	.176	.175	.175	.176	-.005
5	.162	.162	.170	.164	.164	.163	.163	.163	-.007
9	.156	.156	.160	.158	.158	.158	.158	.158	-.002
13	.148	.150	.152	.151	.150	.150	.150	.150	-.002
17	.162	.164	.164	.162	.162	.162	.162	.162	-.002
21	.177	.178	.177	.176	.175	.175	.176	.175	-.002
25	.195	.195	.194	.191	.192	.192	.193	.192	-.002
29	.215	.214	.213	.210	.210	.211	.210	.210	-.003
33	.248	.249	.245	.245	.245	.246	.244	.245	.000
37	.260	.260	.256	.258	.259	.259	.258	.258	+.002

PART #9

POINT NO.	ROLLER GAP SETTING		THICKNESS						
	DESIRED	ACTUAL	DESIRED	ACTUAL 1	2	3	4	AVG.	DEVIATION
1	.178	.179	.181	.196	.196	.195	.195	.195	+.014
5	.169	.170	.170	.183	.183	.182	.183	.183	+.013
9	.158	.160	.160	.170	.170	.170	.170	.170	+.010
13	.150	.153	.152	.161	.162	.160	.161	.161	+.009
17	.164	.168	.164	.172	.172	.173	.173	.172	+.008
21	.179	.181	.177	.189	.191	.191	.190	.190	+.013
25	.197	.199	.194	.207	.208	.208	.207	.207	+.013
29	.217	.218	.213	.222	.222	.222	.222	.222	+.009
33	.250	.253	.245	.255	.256	.257	.256	.256	+.011
37	.262	.265	.256	.265	.267	.266	.266	.266	+.010

ROLLER SETTING AND THICKNESS RESULTS

SECOND OPERATION

PART #10

POINT NO.	ROLLER GAP SETTING		THICKNESS						
	DESIRED	ACTUAL	DESIRED	ACTUAL 1	2	3	4	AVG.	DEVIATION
1	.178	.177	.181	.184	.184	.183	.183	.183	+.002
5	.169	.168	.170	.173	.173	.172	.173	.173	+.003
9	.158	.158	.160	.160	.159	.159	.160	.159	-.001
13	.150	.152	.152	.151	.150	.151	.151	.151	-.001
17	.164	.166	.164	.165	.165	.165	.165	.165	+.001
21	.179	.180	.177	.178	.178	.177	.178	.178	+.001
25	.197	.197	.194	.196	.195	.196	.196	.196	+.002
29	.217	.215	.213	.212	.212	.213	.213	.212	-.001
33	.250	.250	.245	.243	.246	.246	.246	.245	.000
37	.262	.262	.256						

PART #11

POINT NO.	ROLLER GAP SETTING		THICKNESS						
	DESIRED	ACTUAL	DESIRED	ACTUAL 1	2	3	4	AVG.	DEVIATION
1	.178	.178	.181	.183	.184	.183	.182	.183	+.002
5	.169	.169	.170	.172	.173	.172	.171	.172	+.002
9	.158	.159	.160	.161	.161	.161	.160	.161	+.001
13	.150	.152	.152	.152	.152	.152	.152	.152	.000
17	.164	.166	.164	.165	.166	.167	.165	.166	+.002
21	.179	.181	.177	.175	.175	.176	.175	.175	-.002
25	.197	.197	.194	.196	.195	.194	.194	.194	.000
29	.217	.216	.213	.213	.214	.212	.212	.213	.000
33	.250	.251	.245	.244	.243	.244	.244	.244	-.001
37	.262	.262	.256	.253	.252	.253	.252	.252	-.004

PART #12

POINT NO.	ROLLER GAP SETTING		THICKNESS						
	DESIRED	ACTUAL	DESIRED	ACTUAL 1	2	3	4	AVG.	DEVIATION
1	.178	.177	.181	.186	.188	.189	.188	.188	+.007
5	.169	.168	.170	.176	.177	.178	.177	.177	+.007
9	.158	.158	.160	.164	.165	.166	.166	.165	+.005
13	.150	.151	.152	.157	.157	.158	.158	.157	+.005
17	.164	.165	.164	.169	.169	.170	.169	.169	+.005
21	.179	.179	.177	.179	.180	.181	.180	.180	+.003
25	.197	.197	.194	.197	.198	.199	.199	.198	+.004
29	.217	.215	.213	.214	.214	.213	.215	.214	+.001
33	.250	.251	.245	.247	.249	.248	.248	.248	+.003
37	.262	.263	.256	.256	.257	.257	.257	.257	+.001

ROLLER SETTING AND THICKNESS RESULTS

SECOND OPERATION

PART #13

POINT NO.	ROLLER GAP SETTING		THICKNESS						
	DESIRED	ACTUAL	DESIRED	ACTUAL 1	2	3	4	AVG.	DEVIATION
1	.178	.180	.181	.187	.187	.187	.187	.187	+.006
5	.169	.171	.170	.176	.176	.176	.176	.176	+.006
9	.158	.160	.160	.165	.165	.165	.165	.165	+.005
13	.150	.153	.152	.156	.156	.157	.156	.156	+.004
17	.164	.167	.164	.167	.168	.167	.167	.167	+.003
21	.179	.181	.177	.178	.178	.179	.178	.178	+.001
25	.197	.198	.194	.195	.195	.195	.196	.195	+.001
29	.217	.215	.213	.213	.213	.212	.212	.212	-.001
33	.250	.250	.245	.247	.248	.248	.246	.247	+.002
37	.262	.263	.256	.266	.267	.266	.266	.266	+.010

PART #14

POINT NO.	ROLLER GAP SETTING		THICKNESS						
	DESIRED	ACTUAL	DESIRED	ACTUAL 1	2	3	4	AVG.	DEVIATION
1	.178	.179	.181	.187	.186	.186	.186	.186	+.005
5	.169	.169	.170	.175	.175	.175	.175	.175	+.005
9	.158	.158	.160	.163	.163	.163	.163	.163	+.003
13	.150	.152	.152	.155	.156	.156	.155	.155	+.003
17	.164	.166	.164	.168	.168	.168	.168	.168	+.004
21	.179	.180	.177	.179	.179	.180	.180	.179	+.002
25	.197	.197	.194	.195	.195	.195	.195	.195	+.001
29	.217	.216	.213	.212	.212	.211	.213	.212	-.001
33	.250	.250	.245	.245	.245	.246	.246	.245	.000
37	.262	.262	.256	.255	.254	.256	.255	.255	-.001

PART #15

POINT NO.	ROLLER GAP SETTING		THICKNESS						
	DESIRED	ACTUAL	DESIRED	ACTUAL 1	2	3	4	AVG.	DEVIATION
1	.178	.178	.181	.186	.186	.185	.186	.186	+.005
5	.169	.169	.170	.175	.174	.174	.174	.174	+.004
9	.158	.158	.160	.163	.162	.162	.162	.162	+.002
13	.150	.151	.152	.155	.155	.154	.154	.154	+.002
17	.164	.165	.164	.166	.166	.166	.166	.166	+.002
21	.179	.179	.177	.176	.176	.175	.176	.176	-.001
25	.197	.196	.194	.194	.193	.193	.195	.194	.000
29	.217	.214	.213	.211	.212	.212	.212	.212	-.001
33	.250	.249	.245	.245	.244	.245	.245	.245	.000
37	.262	.260	.256	.254	.253	.253	.253	.253	-.003

ROLLER SETTING AND THICKNESS RESULTS

SECOND OPERATION

PART #16

POINT NO.	ROLLER GAP SETTING		THICKNESS						
	DESIRED	ACTUAL	DESIRED	ACTUAL 1	2	3	4	AVG.	DEVIATION
1	.178	.178	.181	.185	.184	.184	.184	.184	+.003
5	.169	.169	.170	.173	.172	.172	.172	.172	+.002
9	.158	.159	.160	.161	.161	.160	.160	.160	.000
13	.150	.152	.152	.154	.154	.154	.153	.154	+.002
17	.164	.167	.164	.169	.169	.169	.168	.169	+.005
21	.179	.181	.177	.180	.180	.181	.180	.180	+.003
25	.197	.198	.194	.197	.197	.197	.197	.197	+.003
29	.217	.217	.213	.213	.216	.215	.216	.215	+.002
33	.250	.251	.245	.247	.248	.248	.248	.248	+.003
37	.262	.264	.256	.256	.256	.257	.256	.256	.000

PART #17

POINT NO.	ROLLER GAP SETTING		THICKNESS						
	DESIRED	ACTUAL	DESIRED	ACTUAL 1	2	3	4	AVG.	DEVIATION
1	.178	.178	.181	.186	.186	.186	.187	.186	+.005
5	.169	.169	.170	.174	.173	.173	.174	.173	+.003
9	.158	.158	.160	.161	.161	.161	.161	.161	+.001
13	.150	.151	.152	.153	.153	.154	.153	.153	+.001
17	.164	.165	.164	.167	.167	.167	.167	.167	+.003
21	.179	.180	.177	.177	.176	.176	.177	.176	-.001
25	.197	.197	.194	.195	.194	.194	.195	.194	.000
29	.217	.215	.213	.212	.212	.212	.212	.212	-.001
33	.250	.250	.245	.247	.247	.246	.246	.246	+.001
37	.262	.262	.256	.255	.255	.256	.255	.255	-.001

PART #18

POINT NO.	ROLLER GAP SETTING		THICKNESS						
	DESIRED	ACTUAL	DESIRED	ACTUAL 1	2	3	4	AVG.	DEVIATION
1	.178	.179	.181	.187	.186	.186	.187	.186	+.005
5	.169	.169	.170	.176	.176	.176	.176	.176	+.006
9	.158	.159	.160	.165	.164	.164	.164	.164	+.004
13	.150	.150	.152	.155	.155	.156	.155	.155	+.003
17	.164	.166	.164	.168	.167	.168	.168	.168	+.004
21	.179	.180	.177	.176	.176	.177	.176	.176	-.001
25	.197	.197	.194	.193	.193	.194	.194	.193	-.001
29	.217	.216	.213	.214	.212	.215	.215	.214	+.001
33	.250	.250	.245	.246	.245	.246	.245	.245	.000
37	.262	.261	.256	.255	.254	.254	.255	.254	-.002

ROLLER SETTING AND THICKNESS RESULTS

SECOND OPERATION

PART #19

POINT NO.	ROLLER GAP SETTING		THICKNESS						
	DESIRED	ACTUAL	DESIRED	ACTUAL 1	2	3	4	AVG.	DEVIATION
1	.178	.178	.181	.183	.181	.181	.181	.181	.000
5	.169	.169	.170	.173	.171	.171	.172	.172	+.002
9	.158	.159	.160	.160	.160	.159	.160	.160	.000
13	.150	.153	.152	.152	.152	.151	.152	.152	.000
17	.164	.167	.164	.167	.166	.166	.166	.166	+.002
21	.179	.181	.177	.178	.177	.176	.177	.177	.000
25	.197	.199	.194	.195	.194	.194	.194	.194	.000
29	.217	.217	.213	.213	.213	.212	.214	.213	.000
33	.250	.252	.245	.248	.247	.247	.247	.247	+.002
37	.262	.263	.256	.258	.257	.257	.257	.257	+.001

PART #20

POINT NO.	ROLLER GAP SETTING		THICKNESS						
	DESIRED	ACTUAL	DESIRED	ACTUAL 1	2	3	4	AVG.	DEVIATION
1	.178	.178	.181	.184	.183	.183	.183	.183	+.002
5	.169	.169	.170	.174	.173	.173	.174	.173	+.003
9	.158	.159	.160	.160	.159	.160	.160	.160	.000
13	.150	.152	.152	.153	.152	.153	.153	.153	+.001
17	.164	.167	.164	.165	.166	.165	.165	.165	+.001
21	.179	.181	.177	.176	.175	.176	.177	.176	-.001
25	.197	.198	.194	.194	.193	.193	.194	.193	-.001
29	.217	.217	.213	.211	.211	.212	.212	.211	-.002
33	.250	.252	.245	.247	.247	.247	.247	.247	+.002
37	.262	.264	.256	.257	.256	.257	.258	.257	+.001

DIAMETERS AT POINT #37

SECOND OPERATION

See Appendix B Page B-8 for
method of determining diameter.

		PART NUMBER				
		2	3	5	6	7
1.	A	13.299	13.568	13.395	13.348	13.253
	B	13.268	13.542	13.345	13.300	13.217
2.	A	13.299	13.582	13.399	13.341	13.254
	B.	13.268	13.554	13.349	13.291	13.218
3.	A	13.297	13.563	13.405	13.346	13.254
	B	13.264	13.537	13.355	13.296	13.219
4.	A	13.297	13.541	13.402	13.353	13.253
	B	13.266	13.517	13.353	13.308	13.216
Average	A	13.298	13.564	13.400	13.347	13.254
	B.	13.266	13.538	13.350	13.299	13.218
O.D.		13.234	13.512	13.300	13.251	13.182
Thickness Pt. 37		.276	.254	.256	.245	.254
I.D.		12.682	13.004	12.788	12.761	12.674

		PART NUMBER			
		8	9	11	12
1.	A	13.244	13.252	13.469	13.480
	B	13.203	13.211	13.427	13.434
2.	A	13.245	13.245	13.460	13.481
	B	13.203	13.207	13.423	13.433
3.	A	13.247	13.254	13.455	13.480
	B	13.208	13.214	13.415	13.434
4.	A	13.245	13.260	13.460	13.479
	B	13.203	13.220	13.420	13.432
Average	A	13.245	13.253	13.461	13.480
	B	13.204	13.213	13.421	13.433
O.D.		13.163	13.173	13.381	13.386
Thickness Pt #37		.258	.266	.252	.257
I.D.		12.647	12.641	12.877	12.872

PART NUMBER

		13	14	15	16
1.	A	13.419	13.451	13.492	13.428
	B	13.365	13.413	13.446	13.386
2.	A	13.426	13.462	13.498	13.431
	B	13.374	13.425	13.452	13.390
3.	A	13.429	13.466	13.489	13.433
	B	13.379	13.425	13.443	13.390
4.	A	13.422	13.457	13.483	13.425
	B	13.371	13.423	13.436	13.383
Average	A	13.424	13.459	13.490	13.429
	B	13.372	13.421	13.444	13.387
O.D.		13.320	13.383	13.398	13.345
Thickness Pt. 37		.266	.255	.253	.256
I.D.		12.788	12.873	12.892	12.833

		PART NUMBER			
		17	18	19	20
1.	A	13.394	13.476	13.405	13.373
	B	13.359	13.440	13.368	13.334
2.	A	13.393	13.479	13.403	13.376
	B	13.354	13.437	13.367	13.339
3.	A	13.392	13.479	13.405	13.376
	B	13.356	13.439	13.369	13.337
4.	A	13.391	13.477	13.409	13.371
	B	13.355	13.435	13.369	13.333
Average	A	13.392	13.478	13.405	13.374
	B	13.356	13.438	13.368	13.336
O.D.		13.320	13.398	13.331	13.298
Thickness Pt. 37		.255	.254	.257	.257
I.D.		12.810	12.890	12.817	13.784

Section 5 - Third Operation

The third operation arbor was mounted in a No. 40 x 24 Floturn Machine. The bed was set parallel to centerline and the new template made as described in Appendix B was used. A 12-inch diameter roller with a 1/8 inch nose radius and a 45° lead angle was used. The roller swivel block was set 8° clockwise, resulting in an effective angle of 37° from centerline to face of roller. A spindle speed of 200 RPM and a feed rate of 2 inches per minute were used.

Before starting on the third operation, the thickness and diameter results obtained in the second operation were reviewed, and a revised order of parts was established which would maintain the best pattern of consistancy with respect to thickness and diameter.

As explained at the start of the second operation, the offset section at the small end was formed prior to any work on the contoured portion.

Prior to work on any full length parts, Part #1 and part #4 which had fractured in the second operation were run to aid in establishing the best gap settings between the roller and arbor to allow for deflection under forming load. The gap settings were modified several times during the running of the parts in the third operation so as to compensate for variation between parts as produced in the second operation. The last seven parts were run with gap settings held as consistant as possible. Thickness results were generally consistant; however, the thicknesses tended to be slightly heavier than desired, but only of the order of .004 to .007.

During the processing of the first six parts, the method of spinning the outer portion of the part was modified before each part, so as to arrive at a method that would gather sufficient material to maintain thickness, and to reduce the diameter of the large end of the part. As had been found in the second operation, the spinning procedure had to be carefully handled so as to obtain the best combination of end results without causing surface fractures.

The methods of spinning the outer portion of the first six parts are outlined on Figures 9-C through 14-C.

Following completion of the first six parts, an auxiliary template was made as shown on Figure 15-C so as to simplify the spinning of the balance of the parts as well as to produce a more uniform contour in the spun section.

The methods of spinning the outer portion of the balance of the parts are outlined on Figures 16-C and 17-C. All parts were processed by Floturning to the first point number indicated, spinning the outer portion of the part, and then Floturning the balance of the part.

The following is a summary of the processing and results on the parts in the third operation:

Part #3: Processed as indicated in Figure 9-C. Spinning operation did not reduce diameter of large portion of part. Part thin in spun portion.

Part #5: Processed as indicated in Figure 10-C. Diameter reduced somewhat more. Some peeling of surface between parts #33 and #37 due to excessive pull-in in third spinning pass. Part thin in spun portion.

Part #6: Processed as indicated in Figure 11-C. Surface crazing in area between points #29 and #37. Diameter large and part thin in spun portion.

Part #2: Processed as indicated in Figure 12-C. Part fractured between Points #21 and #25. Diameter large.

Part #7: Processed as indicated in Figure 13-C. Thickness good but large end still oversize.

Part #8: Processed as indicated in Figure 14-C. Part finished tight on arbor. After cooling, part was smaller than desired due to differential expansion of arbor material and workpiece material.

Parts #9, #13, #10 and #20: Processed as indicated in Figure 16-C. Thickness of four parts generally consistant. Part #13 fractured just short of end of part, and part #10 was short before starting on the third operation, so that large end diameters could not be determined. Diameters of parts #9 and #20 very consistant and smaller than arbor.

Parts #17 and #19: Processed as indicated in Figure 16-C except that the first three spinning passes were modified. Spinning passes on Part #17 were as follows:

First Pass	.300 out from Point #37
Second Pass	.150 out from Point #37
Third Pass	.050 inside of Point #37

Spinning passes on Part #19 were as follows:

First Pass	.350 out from Point #37
Second Pass	.200 out from Point #37
Third Pass	Even with Point #37

The large diameters were still smaller than the arbor but larger than previous parts, and a comparison of Part #19 to Part #17 shows the effect of the change of the spinning passes.

Parts #16 and #11: Processed as indicated in Figure 17-C. First three spinning passes were the same as used on Part #19. Fourth spinning pass modified by adding blocks under stylus when on auxiliary template. Large diameter of both parts oversize; however, no reason could be determined for this condition.

Parts #12, #14, #15 and #18: Processed in same manner as Parts #16 and #11 except that third spinning pass was made .050 inside of point #37 instead of even with point #37. Thickness and large diameter generally consistant with diameter again smaller than arbor.

Complete data covering thickness and diameters of all parts is given on the following pages.

The variations encountered in the diameters at point #37 are traceable to variations in spinning methods and possible variation in arbor temperature except for parts #16 and #11.

After completion of a third operation, sixteen parts were full length; however, two of these, parts #2 and #18, had small fractures.

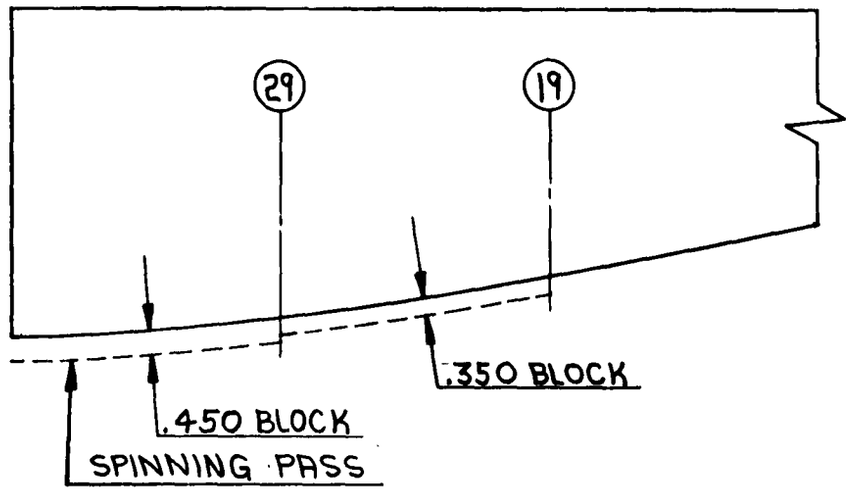

THIRD OPERATION PROCESSING
PART # 3

FIGURE 9-C

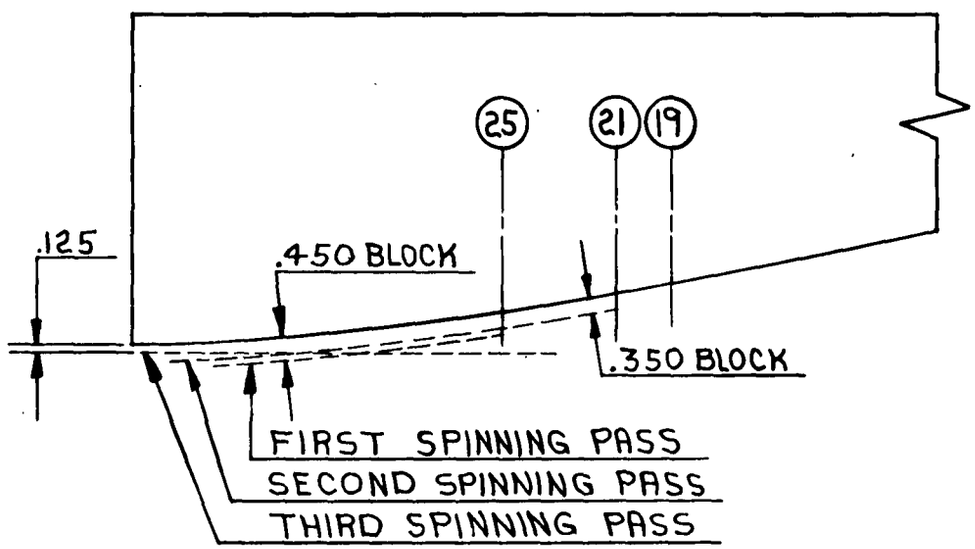

THIRD OPERATION PROCESSING
PART # 5
FIGURE 10-C

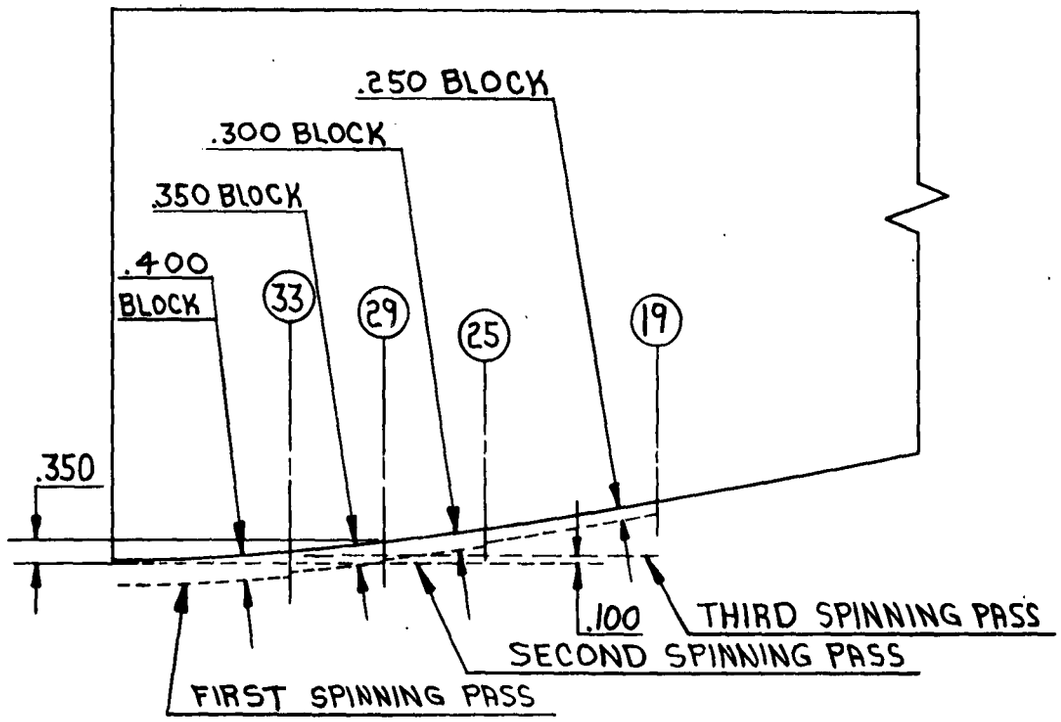

THIRD OPERATION PROCESSING
PART #6

FIGURE 11-C

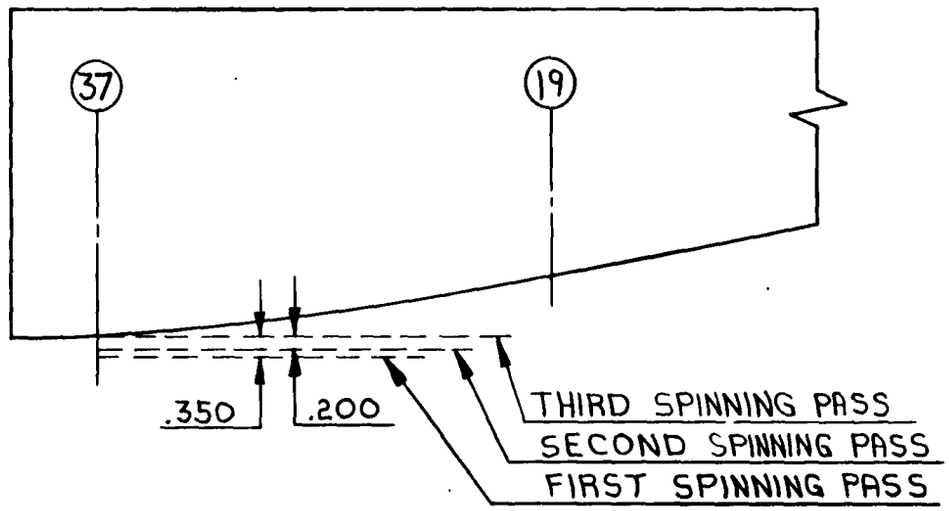

THIRD OPERATION PROCESSING
PART # 2

FIGURE 12-C

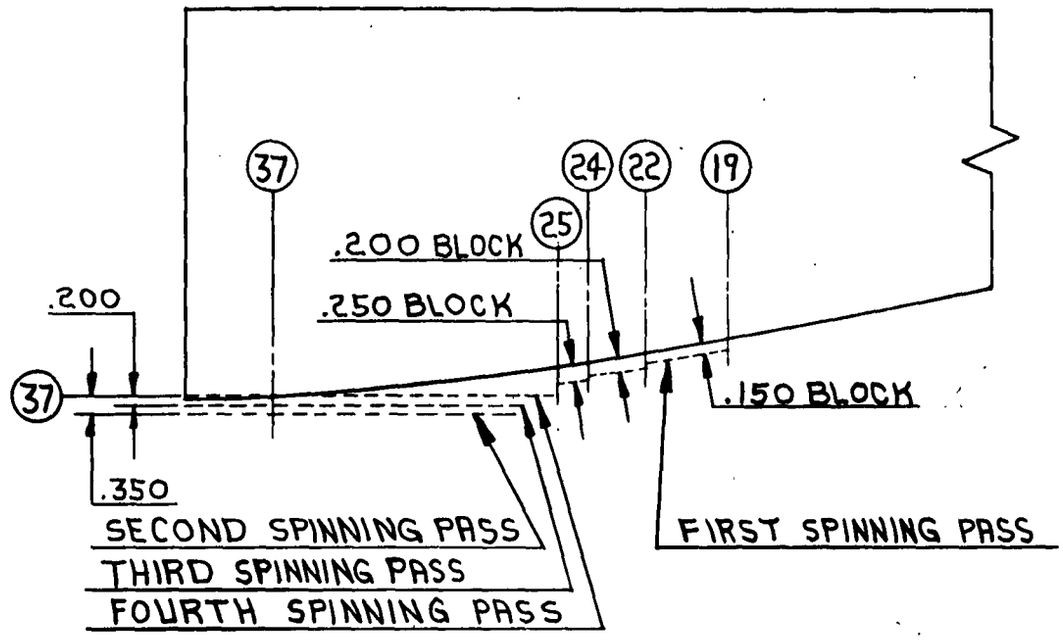

THIRD OPERATION PROCESSING
PART # 7

FIGURE 13-C

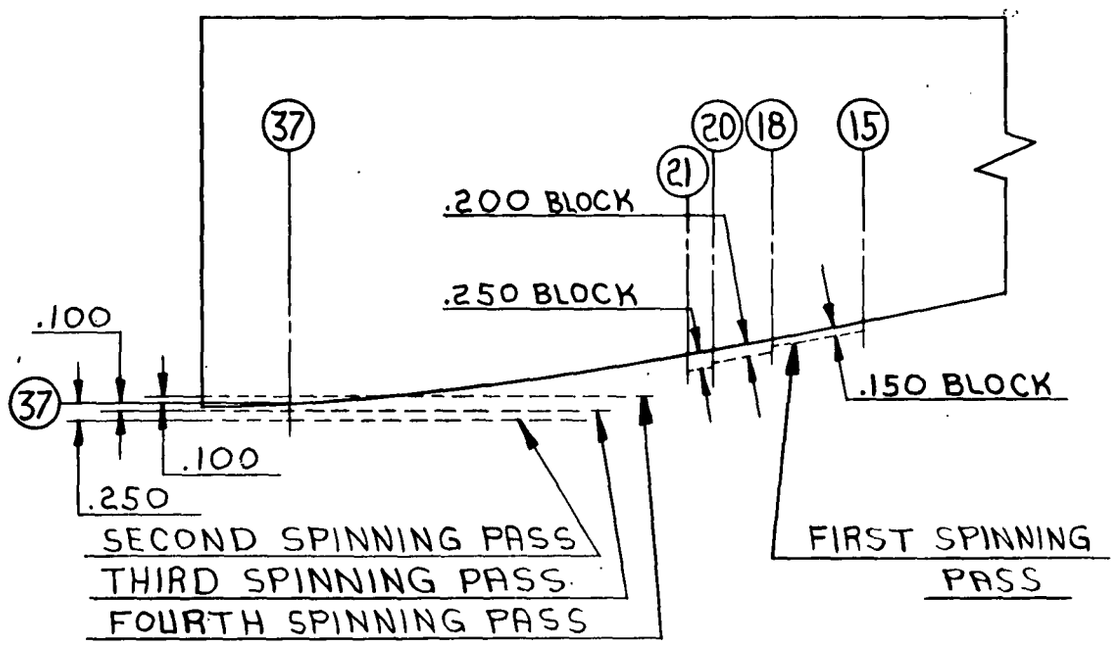

THIRD OPERATION PROCESSING
PART # 8

FIGURE 14-C

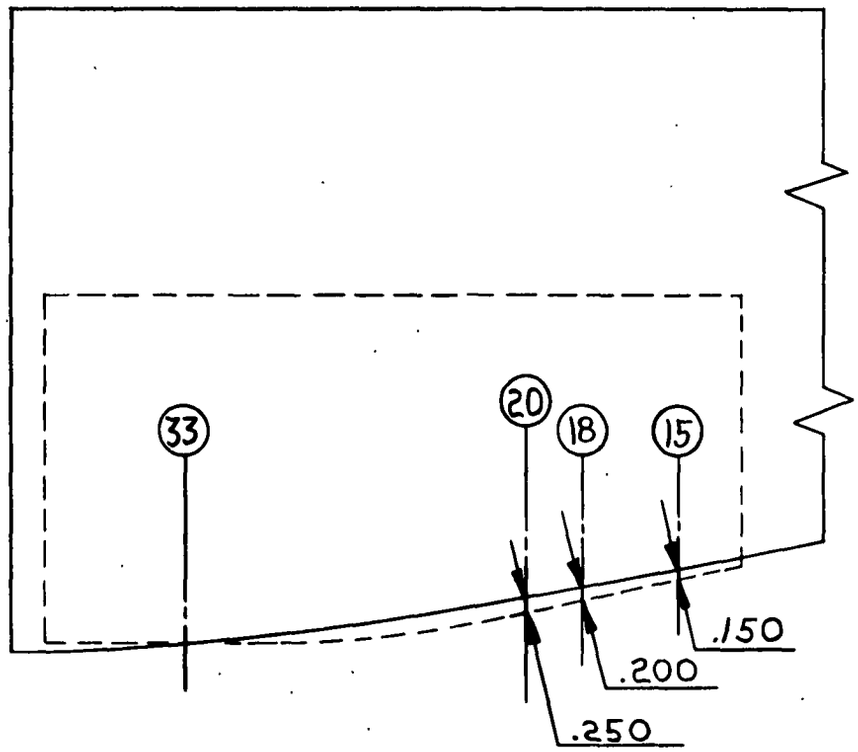

SPECIAL AUXILIARY TEMPLATE
USED FOR FOURTH SPINNING PASS
ON BALANCE OF PARTS

FIGURE 15-C

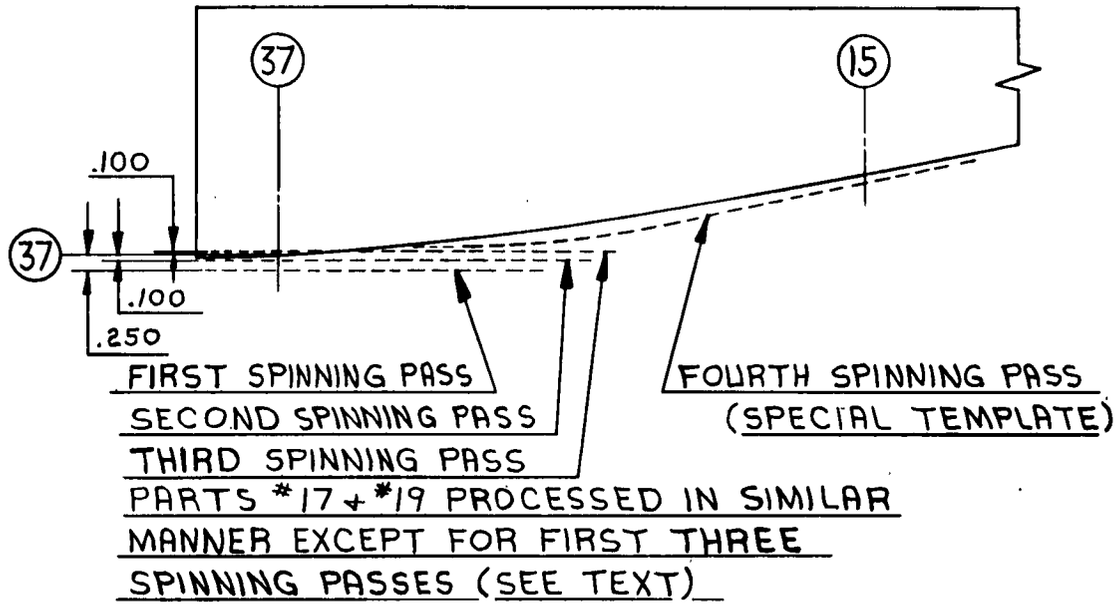

THIRD OPERATION PROCESSING
PART #9-10-13-20

FIGURE 16-C

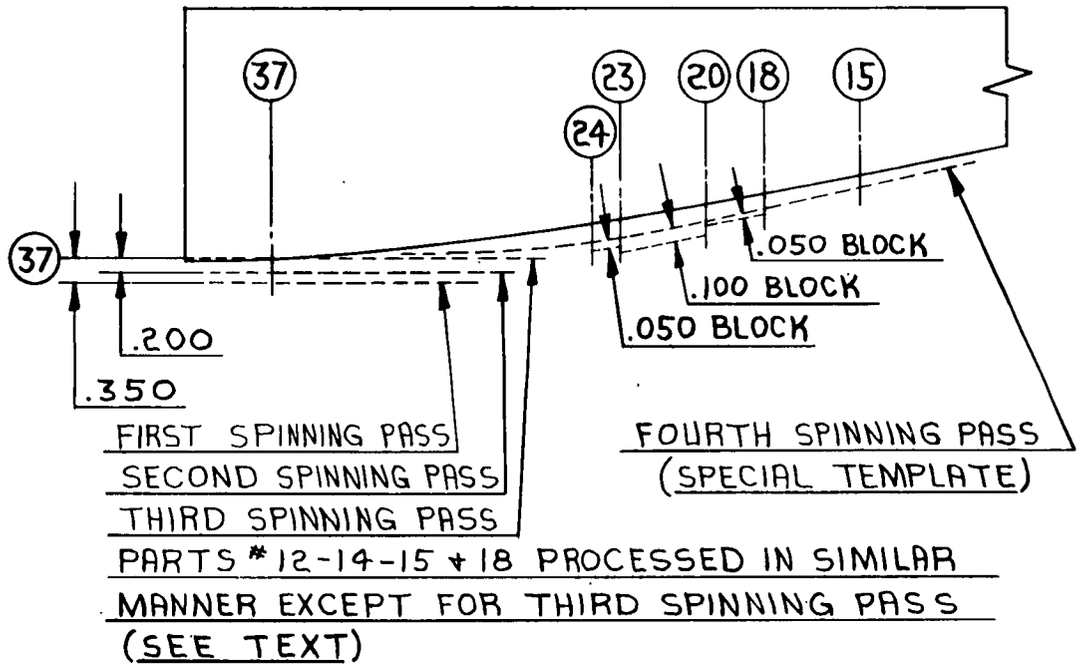

THIRD OPERATION PROCESSING
PART #16 + 11

FIGURE 17-C

ROLLER SETTING AND THICKNESS RESULTS

THIRD OPERATION

PART #1

POINT NO.	ROLLER GAP SETTING		THICKNESS						
	DESIRED	ACTUAL	DESIRED	ACTUAL 1	2	3	4	AVG.	DEVIATION
1	.096	.096	.103	.107	.105	.103	.105	.105	+.002
5	.089	.090	.094	.101	.099	.097	.099	.099	+.005
9	.082		.085						
13									
17									
21									
25									
29									
33									
37	.183								

PART #4

POINT NO.	ROLLER GAP SETTING		THICKNESS						
	DESIRED	ACTUAL	DESIRED	ACTUAL 1	2	3	4	AVG.	DEVIATION
1	.101	.102	.108	.114	.112	.110	.112	.112	+.004
5	.094	.097	.099	.103	.101	.099	.101	.101	+.002
9	.087	.088	.090	.091	.089	.088	.089	.089	-.001
13	.082	.085	.084	.087	.086	.085	.087	.086	+.002
17	.092	.094	.093						
21									
25									
29									
33									
37	.188								

PART #3

POINT NO.	ROLLER GAP SETTING		THICKNESS						
	DESIRED	ACTUAL	DESIRED	ACTUAL 1	2	3	4	AVG.	DEVIATION
1	.101	.102	.108	.112	.110	.107	.109	.109	+.001
5	.094	.098	.099	.101	.099	.097	.100	.099	.000
9	.087	.088	.090	.088	.086	.087	.089	.087	-.003
13	.082	.085	.084	.082	.081	.082	.082	.082	-.002
17	.092	.095	.093	.092	.090	.091	.090	.091	-.002
21	.106	.110	.106	.105	.105	.105	.106	.105	-.001
25	.122	.124	.121	.115	.113	.116	.117	.115	-.006
29	.142	.144	.140	.133	.133	.137	.136	.135	-.005
33	.175	.177	.172	.169	.170	.173	.173	.171	-.001
37	.188	.191	.184	.175	.176	.179	.178	.177	-.007

ROLLER SETTING AND THICKNESS RESULTS

THIRD OPERATION

PART #5

POINT NO.	ROLLER GAP SETTING		THICKNESS						
	DESIRED	ACTUAL	DESIRED	ACTUAL 1	2	3	4	AVG.	DEVIATION
1	.101	.101	.108	.110	.111	.115	.113	.112	+.004
5	.098	.098	.099	.100	.102	.104	.103	.102	+.003
9	.091	.088	.090	.090	.092	.091	.092	.091	+.001
13	.086	.085	.084	.086	.088	.087	.087	.087	+.003
17	.096	.094	.093	.090	.092	.091	.090	.091	-.002
21	.110	.109	.106	.103	.103	.103	.102	.103	-.003
25	.126	.124	.121	.111	.112	.115	.114	.113	-.008
29	.146	.144	.140	.134	.136	.136	.136	.135	-.005
33	.179	.176	.172	.171	.172	.172	.171	.171	-.001
37	.192	.192	.184	.178	.180	.182	.180	.180	-.004

PART #6

POINT NO.	ROLLER GAP SETTING		THICKNESS						
	DESIRED	ACTUAL	DESIRED	ACTUAL 1	2	3	4	AVG.	DEVIATION
1	.101	.100	.108	.107	.107	.108	.108	.107	-.001
5	.098	.097	.099	.099	.100	.100	.099	.099	.000
9	.091	.089	.090	.088	.089	.088	.088	.088	-.002
13	.086	.085	.084	.083	.084	.084	.082	.083	-.001
17	.096	.095	.093	.091	.092	.091	.090	.091	-.002
21	.110	.109	.106	.104	.104	.104	.103	.104	-.002
25	.126	.124	.121	.114	.116	.116	.114	.115	-.006
29	.146	.144	.140	.135	.135	.135	.134	.135	-.005
33	.179	.177	.172	.168	.169	.170	.168	.169	-.003
37	.192	.191	.183	.179	.181	.181	.179	.180	-.004

PART #2

POINT NO.	ROLLER GAP SETTING		THICKNESS						
	DESIRED	ACTUAL	DESIRED	ACTUAL 1	2	3	4	AVG.	DEVIATION
1	.101	.101	.108	.111	.111	.111	.111	.111	+.003
5	.098	.098	.099	.102	.102	.104	.103	.103	+.004
9	.091	.090	.090	.093	.093	.094	.093	.093	+.003
13	.086	.085	.084	.085	.087	.086	.085	.086	+.002
17	.096	.095	.093	.093	.094	.094	.093	.093	.000
21	.110	.110	.106	.112	.111	.109	.110	.110	+.004
25	.126	.125	.121	.120	.117	.117	.119	.118	-.003
29	.146	.146	.140	.140	.137	.139	.141	.139	-.001
33	.179	.178	.172	.174	.172	.174	.175	.174	+.002
37	.192	.193	.184	.185	.183	.183	.184	.184	.000

ROLLER SETTING AND THICKNESS RESULTS

THIRD OPERATION

PART #7

POINT NO.	ROLLER GAP SETTING		THICKNESS						
	DESIRED	ACTUAL	DESIRED	ACTUAL 1	2	3	4	AVG.	DEVIATION
1	.101	.100	.108	.113	.113	.113	.111	.112	+.004
5	.098	.098	.099	.104	.104	.103	.102	.103	+.004
9	.091	.088	.090	.089	.088	.088	.087	.088	-.002
13	.086	.086	.084	.085	.084	.083	.085	.084	.000
17	.096	.098	.093	.095	.094	.094	.095	.094	+.001
21	.114	.115	.106	.111	.110	.110	.110	.110	+.004
25	.131	.132	.121	.126	.126	.124	.125	.125	+.004
29	.149	.152	.140	.145	.144	.143	.143	.144	+.004
33	.179	.181	.172	.178	.179	.177	.178	.178	+.006
37	.197	.199	.184	.190	.190	.189	.190	.190	+.006

PART #8

POINT NO.	ROLLER GAP SETTING		THICKNESS						
	DESIRED	ACTUAL	DESIRED	ACTUAL 1	2	3	4	AVG.	DEVIATION
1	.095	.095	.108	.103	.103	.104	.103	.103	-.005
5	.094	.095	.099	.100	.100	.101	.100	.100	+.001
9	.090	.091	.090	.092	.093	.092	.092	.092	+.002
13	.086	.089	.084	.088	.088	.088	.087	.088	+.004
17	.097	.099	.093	.094	.095	.094	.094	.094	+.001
21	.111	.113	.106	.108	.108	.107	.107	.107	+.001
25	.127	.131	.121	.121	.121	.120	.120	.120	-.001
29	.147	.150	.140	.141	.142	.142	.141	.141	+.001
33	.180	.183	.172	.175	.177	.177	.173	.175	+.003
37	.193	.192	.184	.181	.183	.183	.181	.182	-.002

PART #9

POINT NO.	ROLLER GAP SETTING		THICKNESS						
	DESIRED	ACTUAL	DESIRED	ACTUAL 1	2	3	4	AVG.	DEVIATION
1	.100	.099	.108	.109	.109	.108	.108	.108	.000
5	.094	.094	.099	.098	.097	.097	.096	.097	-.002
9	.090	.090	.090	.091	.091	.090	.090	.090	.000
13	.086	.086	.084	.087	.086	.085	.086	.086	+.002
17	.097	.098	.093	.093	.092	.092	.093	.092	-.001
21	.111	.113	.106	.105	.104	.104	.105	.104	-.002
25	.127	.130	.121	.122	.121	.122	.122	.122	+.001
29	.147	.149	.140	.141	.140	.141	.142	.141	+.001
33	.180	.182	.172	.177	.176	.177	.178	.177	+.005
37	.195	.195	.184	.187	.185	.185	.187	.186	+.002

ROLLER SETTING AND THICKNESS RESULTS

THIRD OPERATION

PART #13

POINT NO.	ROLLER GAP SETTING		THICKNESS						
	DESIRED	ACTUAL	DESIRED	ACTUAL 1	2	3	4	AVG.	DEVIATION
1	.100	.100	.108	.111	.111	.112	.112	.111	+.003
5	.094	.095	.099	.102	.103	.103	.102	.102	+.003
9	.090	.091	.090	.094	.094	.095	.095	.094	+.004
13	.086	.087	.084	.089	.089	.090	.090	.089	+.005
17	.097	.099	.093	.095	.096	.096	.095	.095	+.002
21	.111	.114	.106	.109	.110	.108	.108	.109	+.003
25	.127	.132	.121	.125	.126	.124	.124	.125	+.004
29	.147	.152	.140	.144	.145	.142	.143	.143	+.003
33	.180	.186	.172	.179	.179	.177	.178	.178	+.006
37	.195	.198	.184						

PART #10

POINT NO.	ROLLER GAP SETTING		THICKNESS						
	DESIRED	ACTUAL	DESIRED	ACTUAL 1	2	3	4	AVG.	DEVIATION
1	.100	.100	.108	.113	.114	.113	.112	.113	+.005
5	.095	.096	.099	.105	.105	.105	.104	.105	+.006
9	.091	.092	.090	.096	.097	.095	.095	.096	+.006
13	.087	.088	.084	.088	.088	.088	.088	.088	+.004
17	.099	.101	.093	.100	.098	.097	.098	.098	+.005
21	.114	.116	.106	.114	.112	.112	.113	.113	+.007
25	.132	.133	.121	.131	.129	.129	.131	.130	+.009
29	.152	.153	.140	.149	.148	.148	.149	.148	+.008
33									
37									

PART #20

POINT NO.	ROLLER GAP SETTING		THICKNESS						
	DESIRED	ACTUAL	DESIRED	ACTUAL 1	2	3	4	AVG.	DEVIATION
1	.100	.099	.108	.111	.110	.110	.109	.110	+.002
5	.094	.093	.099	.099	.099	.098	.098	.098	-.001
9	.088	.086	.090	.089	.088	.087	.086	.087	-.003
13	.085	.083	.084	.083	.082	.081	.080	.081	-.003
17	.097	.096	.093	.090	.089	.089	.088	.089	-.004
21	.111	.111	.106	.101	.101	.100	.100	.100	-.006
25	.128	.128	.121	.119	.120	.119	.119	.119	-.002
29	.150	.150	.140	.140	.140	.140	.139	.140	.000
33	.181	.182	.172	.173	.173	.171	.171	.172	.000
37	.193	.193	.184	.181	.181	.180	.180	.180	-.004

ROLLER SETTING AND THICKNESS RESULTS

THIRD OPERATION

PART #17

POINT NO.	ROLLER GAP SETTING		THICKNESS						
	DESIRED	ACTUAL	DESIRED	ACTUAL 1	2	3	4	AVG.	DEVIATION
1	.100	.101	.108	.111	.111	.111	.110	.111	+.003
5	.094	.094	.099	.100	.100	.098	.099	.099	+.000
9	.090	.090	.090	.093	.092	.090	.092	.092	+.002
13	.087	.087	.084	.090	.089	.088	.090	.089	+.005
17	.101	.101	.093	.099	.098	.098	.099	.098	+.005
21	.118	.119	.106	.116	.115	.116	.116	.116	+.010
25	.130	.133	.121	.125	.124	.124	.125	.124	+.003
29	.150	.153	.140	.145	.143	.143	.144	.144	+.004
33	.181	.184	.172	.180	.177	.177	.178	.178	+.006
37	.193	.195	.184	.188	.186	.187	.188	.187	+.003

PART #19

POINT NO.	ROLLER GAP SETTING		THICKNESS						
	DESIRED	ACTUAL	DESIRED	ACTUAL 1	2	3	4	AVG.	DEVIATION
1	.104	.104	.108	.114	.112	.112	.112	.112	+.004
5	.097	.097	.099	.101	.100	.099	.100	.100	+.001
9	.093	.093	.090	.094	.092	.092	.093	.093	+.003
13	.090	.089	.084	.090	.089	.088	.090	.089	+.005
17	.104	.104	.093	.101	.099	.099	.100	.100	+.007
21	.121	.121	.106	.117	.116	.116	.117	.116	+.010
25	.133	.134	.121	.130	.128	.128	.130	.129	+.008
29	.153	.154	.140	.148	.147	.148	.149	.148	+.008
33	.184	.185	.172	.183	.180	.180	.182	.181	+.009
37	.195	.196	.184	.191	.190	.190	.191	.190	+.006

PART #16

POINT NO.	ROLLER GAP SETTING		THICKNESS						
	DESIRED	ACTUAL	DESIRED	ACTUAL 1	2	3	4	AVG.	DEVIATION
1	.104	.105	.108	.112	.111	.111	.112	.111	+.003
5	.097	.098	.099	.100	.099	.100	.100	.100	+.001
9	.093	.093	.090	.091	.090	.092	.092	.091	+.001
13	.090	.089	.084	.088	.087	.088	.088	.088	+.004
17	.104	.104	.093	.101	.101	.102	.102	.101	+.008
21	.121	.120	.106	.117	.117	.118	.118	.117	+.011
25	.133	.133	.121	.129	.129	.130	.130	.129	+.008
29	.153	.153	.140	.147	.148	.149	.149	.148	+.008
33	.184	.184	.172	.181	.181	.183	.183	.182	+.010
37	.195	.196	.184	.191	.191	.193	.192	.192	+.008

ROLLER SETTING AND THICKNESS RESULTS

THIRD OPERATION

PART #11

POINT NO.	ROLLER GAP SETTING		THICKNESS						
	DESIRED	ACTUAL	DESIRED	ACTUAL 1	2	3	4	AVG.	DEVIATION
1	.104	.104	.108	.115	.114	.114	.114	.114	+.006
5	.097	.097	.099	.102	.101	.101	.101	.101	+.002
9	.093	.093	.090	.093	.092	.092	.092	.092	+.002
13	.090	.089	.084	.086	.086	.086	.086	.086	+.002
17	.104	.104	.093	.097	.096	.096	.097	.096	+.003
21	.121	.121	.106	.112	.111	.112	.113	.112	+.006
25	.133	.133	.121	.124	.124	.123	.124	.124	+.003
29	.153	.152	.140	.142	.141	.142	.144	.142	+.002
33	.184	.184	.172	.176	.174	.175	.178	.176	+.004
37	.195	.195	.184	.184	.183	.184	.186	.184	.000

PART #12

POINT NO.	ROLLER GAP SETTING		THICKNESS						
	DESIRED	ACTUAL	DESIRED	ACTUAL 1	2	3	4	AVG.	DEVIATION
1	.104	.104	.108	.112	.112	.112	.112	.112	+.004
5	.097	.097	.099	.099	.100	.100	.100	.100	+.001
9	.093	.092	.090	.089	.090	.090	.089	.089	-.001
13	.090	.088	.084	.084	.085	.085	.083	.084	.000
17	.104	.103	.093	.096	.098	.097	.096	.097	+.004
21	.121	.121	.106	.112	.114	.113	.112	.113	+.007
25	.133	.133	.121	.125	.126	.126	.124	.125	+.004
29	.153	.153	.140	.146	.147	.146	.145	.146	+.006
33	.184	.183	.172	.178	.179	.180	.177	.178	+.006
37	.195	.195	.184	.187	.189	.189	.186	.188	+.004

PART #14

POINT NO.	ROLLER GAP SETTING		THICKNESS						
	DESIRED	ACTUAL	DESIRED	ACTUAL 1	2	3	4	AVG.	DEVIATION
1	.104	.104	.108	.112	.111	.110	.111	.111	+.003
5	.097	.097	.099	.103	.102	.102	.101	.102	+.003
9	.093	.092	.090	.094	.094	.094	.092	.093	+.003
13	.090	.088	.084	.087	.087	.088	.086	.087	+.003
17	.104	.103	.093	.097	.098	.098	.096	.097	+.004
21	.121	.121	.106	.113	.114	.114	.112	.113	+.007
25	.133	.133	.121	.125	.126	.125	.124	.125	+.004
29	.153	.152	.140	.143	.145	.144	.142	.143	+.003
33	.184	.183	.172	.177	.179	.179	.176	.178	+.006
37	.195	.195	.184	.186	.188	.188	.185	.187	+.003

ROLLER SETTING AND THICKNESS RESULTS

THIRD OPERATION

PART #15

POINT NO.	ROLLER GAP SETTING		THICKNESS						
	DESIRED	ACTUAL	DESIRED	ACTUAL				AVG.	DEVIATION
				1	2	3	4		
1	.104	.104	.108	.112	.112	.111	.111	.111	+.003
5	.097	.097	.099	.102	.101	.100	.100	.101	+.002
9	.093	.093	.090	.092	.092	.090	.090	.091	+.001
13	.090	.089	.084	.087	.086	.086	.086	.086	+.002
17	.104	.104	.093	.099	.098	.097	.098	.098	+.005
21	.121	.122	.106	.115	.114	.113	.114	.114	+.008
25	.133	.134	.121	.127	.127	.125	.127	.126	+.005
29	.153	.155	.140	.148	.147	.144	.146	.146	+.006
33	.184	.186	.172	.181	.181	.179	.180	.180	+.008
37	.195	.197	.184	.190	.190	.189	.188	.189	+.005

PART #18

POINT NO.	ROLLER GAP SETTING		THICKNESS						
	DESIRED	ACTUAL	DESIRED	ACTUAL				AVG.	DEVIATION
				1	2	3	4		
1	.104	.104	.108	.112	.111	.112	.113	.112	+.004
5	.097	.097	.099	.101	.100	.102	.102	.101	+.002
9	.093	.093	.090	.093	.093	.093	.094	.093	+.003
13	.090	.089	.084	.087	.087	.088	.088	.087	+.003
17	.104	.104	.093	.097	.098	.099	.099	.098	+.005
21	.121	.121	.106	.113	.115	.116	.115	.115	+.009
25	.133	.134	.121	.126	.127	.129	.129	.128	+.007
29	.153	.154	.140	.146	.147	.148	.148	.147	+.007
33	.184	.184	.172	.180	.181	.182	.181	.181	+.009
37	.195	.197	.184	.189	.190	.191	.190	.190	+.006

Diameters at Point #37

Third Operation

See Appendix B Page B-8 for
Method of Determining Diameter

		PART NUMBER			
		3	5	6	2
1.	A	12.450	12.356	12.410	12.422
	B	12.438	12.325	12.378	12.393
2.	A	12.448	12.353	12.415	12.425
	B	12.434	12.323	12.386	12.345
3.	A	12.452	12.343	12.407	12.438
	B	12.436	12.313	12.378	12.408
4.	A	12.451	12.344	12.396	12.433
	B	12.442	12.315	12.366	12.404
Average	A	12.450	12.349	12.407	12.430
	B	12.438	12.319	12.377	12.400
O.D.		12.426	12.289	12.347	12.370
Thickness Pt. 37		.177	.180	.180	.184
I.D.		12.072	11.929	11.987	12.002

PART NUMBER

		7	8	9	20
1.	A	12.383	12.257	12.242	12.240
	B	12.359	12.231	12.216	12.211
2.	A	12.373	12.255	12.243	12.235
	B	12.350	12.231	12.218	12.206
3.	A	12.371	12.255	12.233	12.246
	B	12.348	12.230	12.208	12.212
4.	A	12.384	12.257	12.235	12.252
	B	12.359	12.231	12.209	12.218
Average	A	12.378	12.256	12.238	12.243
	B	12.354	12.231	12.213	12.212
O.D.		12.330	12.206	12.188	12.181
Thickness Pt 37		.190	.182	.186	.180
I.D.		11.950	11.842	11.816	11.821

		PART NUMBER			
		17	19	16	11
1.	A	12.245	12.290	12.373	12.418
	B	12.219	12.260	12.341	12.381
2.	A	12.252	12.297	12.379	12.416
	B	12.228	12.266	12.348	12.382
3.	A	12.265	12.295	12.376	12.415
	B	12.241	12.265	12.343	12.382
4.	A	12.258	12.288	12.369	12.419
	B	12.235	12.259	12.335	12.384
Average	A	12.255	12.293	12.374	12.417
	B	12.231	12.263	12.342	12.382
O.D.		12.207	12.233	12.310	12.347
Thickness Pt. 37		.187	.190	.192	.184
I.D.		11.833	11.853	11.926	11.979

		PART NUMBER			
		12	14	15	18
1.	A	12.263	12.252	12.264	12.290
	B	12.238	12.228	12.235	12.260
2.	A	12.265	12.248	12.248	12.288
	B	12.238	12.223	12.221	12.261
3.	A	12.260	12.255	12.257	12.279
	B	12.233	12.229	12.231	12.252
4.	A	12.257	12.258	12.277	12.290
	B	12.232	12.231	12.248	12.255
Average	A	12.261	12.253	12.261	12.287
	B	12.235	12.228	12.234	12.257
O.D.		12.209	12.203	12.207	12.227
Thickness Pt. 37		.188	.187	.189	.190
I.D.		11.833	11.829	11.829	11.847

Section #6 - Fourth Operation

Prior to starting work on parts in the fourth operation, it was necessary to install new heating rods in the fourth operation arbor. Following the recommendation of the rod manufacturer, sand was utilized in place of steel shot to obtain more uniform heating.

After completion of rod installation, the arbor was mounted in the Floturn machine and heated to operating temperature and a check made for stability. When suitable stability was indicated, several short sections, salvaged from parts that had fractured in earlier operations, were run to determine the best operating conditions. As this work was being performed, it was noticed that the sand packed inside of the arbor was sifting out through the adapter into the spindle bore due to insufficient confinement.

The arbor was removed from the machine, repacked with sand, and additional packing and clamping placed around the rods at the open end of the arbor. Following these corrective measures, the arbor was once again mounted in the Floturn machine and heated to operating temperature. Two more short sections were run on the tool and results indicated that, although the arbor was running true enough at each end, the center was not true due to a warped condition introduced by the application of heat.

In order to eliminate the warped condition, it was decided to remachine the contoured section of the arbor while the arbor was at operating temperature. Shortly after the remachining was begun, the heating rods again failed, so that no further work could be done.

A review of the problems encountered with the fourth operation arbor pointed up the following difficulties:

1. The alloy iron arbor would not remain stable at operating temperature unless some conductive material was packed around the rods inside the arbor.

2. The heating rods fail very quickly if some material is packed in the arbor.

It was concluded that the only way to by-pass the foregoing difficulties would be to make a new arbor using a tool steel grade of material which could be hardened and then drawn at about 1000°F. so as to obtain stability at an operating temperature of 700°F.

Approval was requested and received to procure a new fourth operation arbor made from high carbon- high chromium air hardening tool steel. The internal core configuration of the arbor casting presented great difficulty at the foundry and even after making a second casting, the grooves required for location of the heating rods and the small end of the core section were

filled with burned sand so that the heating rods could not be inserted to full depth. The rod mounting was modified so that although the rods extended approximately 3" from the original position, they would clear the arbor mounting adapter.

Following installation of the rods, the arbor was heated to check operation of the rods and to determine the reaction of the arbor. A preliminary check indicated that there was some distortion of the arbor. On the following day, the arbor was again brought to operating temperature and a complete check was made of distortion and stability. It was found that the large and small end of the arbor could be maintained at a stable condition with runout held to a maximum of .001 TIR. However, at the middle, the runout was .010.

While the observations were being made to determine the general condition of the arbor at operating temperature, a trace of oil was noticed seeping out between the arbor adapter and the spindle flange. This condition had never been observed prior to this time and since the amount of oil was very slight, no particular significance was attached to this matter.

The runout condition existing in the arbor when at operating temperature made it imperative that the arbor be re-machined while hot.

After cooling overnight, the arbor was again brought to operating temperature and the runout established as .001 T.I.R. maximum at the large and small end. The template was set so that the contoured portion of the arbor could be machined by adjusting the template parallel to center line toward the headstock, thereby permitting stock removal throughout the contour by shortening the arbor slightly without reducing the diameter at the large end.

A problem was encountered in the break down of the carbide turning tool; however, with frequent indexing of the insert and careful blending of cuts in various areas, the machining was carried out until the end of the day at which time approximately one-third of the length of the arbor from the small end had been cleaned-up and the middle third partially cleaned-up but all of the runout not removed. Before shutting down, a check was made of the runout condition of the arbor with the tailstock removed. The large end of the arbor was found to have the same runout of .001 T.I.R. as originally established; however, the small end of the arbor ranout .030 T.I.R. This drastic change was assumed to have resulted from the removal of metal from only a portion of the circumference in the middle third of the length of the arbor. The removal of metal from only a portion of the surface apparently resulted in a differential expansion in the middle of the arbor which caused the small end of the arbor to have a greater runout.

Although it would appear that the additional distortion would present a very serious problem, it was felt that it could be overcome by reversing the direction of machining and starting the cuts at the large end finishing the nose last.

On the following morning, heating power was again applied to the internal heating rods to heat the arbor to operating temperature so that machining could continue. Following standard procedures, the rods were kept under close observation through the hole in the small end of the arbor until it was apparent that they were heating properly. After a period of approximately one hour, it became apparent that the temperature of the arbor was not increasing in a normal manner. Also, the seepage of oil from between the arbor adapter and spindle flange had increased. A visual check of the rods showed that only one of the three heating rods was hot, while the other two showed no sign of being at elevated temperature. A check of electrical conditions showed that one fuse in the three phase supply was blown and that an electrical ground existed somewhere inside the arbor.

The arbor was immediately removed from the Floturn Machine; however, the arbor was too hot to permit removal of the adapter for further examination of the rods that day.

After cooling over night, the adapter was removed from the arbor and it was found that the alloy sheath of all three rods was burnt through at one end approximately three inches from the end terminal. Also, all surfaces of the arbor, adapter and rods in the cavity at the large end were coated with a brownish white film that is the characteristic result of vaporized oil.

A study was made of the cause for rod failure, which seemed to be the result of the oil seeping out of the head stock.

Since the rods were closer to the spindle, a greater heat flow into the spindle was encountered which caused some distortion of the spindle and slinger ring, permitting oil to flow out through the bearing knockout holes into the space between the spindle and the arbor adapter. This oil reached the terminal ends of the rods and was absorbed by the Magnesium Oxide insulation in the rods until the oil reached the Nichrome resistor wire, causing rapid failure of the wire and alloy sheath.

This completes Appendix C as no further work was done on this contract.