63-3-6

406711

CATALOGED BY DDC
AS AD No. 406711

BOEING

406 711

DDC
RECEIVED
JUN 10 1963
TISIA D

SEATTLE, WASHINGTON

THE BOEING COMPANY

CODE IDENT NO. 81205

NUMBER D2-13946-4

TITLE FLIGHT ARTICLE MASS PROPERTIES REPORT FOR MINUTEMAN WING II COMPONENTS FOR MISSILES 653-687 (U)

MODEL NO. WS-133A CONTRACT NO. AF04(694)-46

ISSUE NO. 20 ISSUED TO astia 25-287052

SPECIAL LIMITATIONS ON ASTIA DISTRIBUTION

ASTIA may distribute this report to requesting agencies subject to their security agreement, approved fields of interest, and the following:

☒ UNLIMITED—To all agencies of the Department of Defense and their contractors.

☐ LIMITED—To U. S. Military organizations only.

This report may be distributed to nonmilitary agencies not approved above subject to Boeing approval of each request.

NOTE: the LIMITED category may be checked only because of actual or potential patent, proprietary, ethical, or similar implications.

	Charles A. Hanson	4-22-63
PREPARED BY	Fred W. Sladen	4-22-63
SUPERVISED BY	Roger C. Wierenga	4-22-63
APPROVED BY	Duane C. Brenden	4-22-63
APPROVED BY	R. G. Grey	4-22-63
CLASS & DISTR APPROVED BY	R. G. Grey	4-22-63
		(DATE)

REV SYM _____

VOL. NO. OF

SECT. PAGE 1

U3 4287 9035 ORIG. 8/62

2-5142-2

ACTIVE PAGE RECORD

SECTION	ORIG REL PAGE NO.	REV SYM	ADDED PAGES						SECTION	ORIG REL PAGE NO.	REV SYM	ADDED PAGES					
			PAGE NO.	REV SYM	PAGE NO.	REV SYM	PAGE NO.	REV SYM				PAGE NO.	REV SYM	PAGE NO.	REV SYM	PAGE NO.	REV SYM
	1									49							
	2									50							
	3									51							
	4									52							
	5									53							
	6									54							
	7									55							
	8									56							
	9									57							
	10									58							
	11									59							
	12									60							
	13									61							
	14									62							
	15									63							
	16									64							
	17									65							
	18									66							
	19									67							
	20									68							
	21									69							
	22									70							
	23									71							
	24									72							
	25																
	26																
	27																
	28																
	29																
	30																
	31																
	32																
	33																
	34																
	35																
	36																
	37																
	38																
	39																
	40																
	41																
	42																
	43																
	44																
	45																
	46																
	47																
	48																

REVISIONS			
SYM	DESCRIPTION	DATE	APPROVED

U3 4287 9025 ORIG. 8/62

2-5142-2

REV SYM_____

TABLE OF CONTENTS

		PAGE
	SUMMARY	5
1.0	INTRODUCTION	6
1.1	REFERENCES	6
1.2	REFERENCES	6
1.3	DISCUSSION	6
1.4	CTLI PROVISIONS	7
1.5	WEIGHING PROCEDURES	7
1.6	ECP INCORPORATION	7
2.0	MISSILE STATION DIAGRAM	8
3.0	WEIGHT AND BALANCE SUMMARIES	
3.1	MISSILE 653	9
3.2	MISSILE 655	10
3.3	MISSILE 660	11
3.4	MISSILE 662	12
3.5	MISSILE 667	13
3.6	MISSILE 669	14
3.7	MISSILE 674	15
3.8	MISSILE 676	16
3.9	MISSILE 679	17
3.10	MISSILE 681	18
3.11	MISSILE 683	19
3.12	MISSILE 686	20
3.13	MISSILE 687	21
3.14	SUMMARY OF MEAN WEIGHT COMPONENTS	22
4.0	SUMMARY CHECK LISTS - MISSILE SECTIONS	23
5.0	ENGINEERING CHANGE PROPOSALS INCORPORATED	24
6.0	ACTUAL WEIGHING RECORDS	
6.1	INTERSTAGE - SECTION 45	25
6.2	INTERSTAGE - SECTION 47	41
6.3	AFT SKIRT - SECTION 49	57
6.4	BASE HEAT DEFLECTORS	72

SUMMARY

This report contains mass property summaries of the Boeing components for a series of Operational Wing II Minuteman missiles. The serialized components included in the data for each missile are those committed to that particular missile during the course of production in Seattle and may not be the ones finally installed during missile assembly at Air Force Plant 77.

1.0 INTRODUCTION

1.1 REFERENCES

1.1.1 BSD Exhibit 62-45, "Mass Properties Control Data for WS-133A", Dated 3 August 1962.

1.1.2 CCN 258 (BSD-63MSN-2597) to AF04(647)-580 dated 5 October 1962.

1.1.3 Boeing Document D2-13943-2, "Flight Article Mass Properties Report for CTLI Installations."

1.1.4 Boeing Document D2-13944-501, "Flight Article Mass Properties Report for Missile 501 Components."

1.1.5 Boeing Document D2-13956-1 "Statistical Means and Dispersions for the Mass Properties of Boeing Components for the Wing II Operational Minuteman Missile - March 1, 1963."

1.1.6 Boeing Document D2-13947-xxx "Air Force Plant 77 Flight Article Mass Properties Report for Missile xxx.

1.2 COMPONENT SERIAL NUMBERS

Component serial numbers appear on the data summary sheet for each missile. See pages 9 through 21.

1.3 DISCUSSION

This weight report for the Boeing components of a series of Operational Wing II Minuteman missiles is presented in accordance with section 3.1.1 of BSD Exhibit 62-45 (reference 1.1.1) as authorized by CCN 258 to AF04(647)-580 (reference 1.1.2). Since the data are to be reported monthly, this report contains data for a series of Wing II missiles whose components were manufactured recently. The report includes actual mass properties for the major components assigned to each missile in the manufacturing records at Seattle. (These may not be the same components finally assembled together at Air Force Plant 77. See reference 1.1.6 for the final configuration). Mean mass properties are used for components other than the interstages, aft skirt, and base heat deflectors since the weights for these remaining items are small. Mean and dispersion back-up data for these items can be found in the latest quarterly means and dispersions report (reference 1.1.5).

The data presented in this report consist of (1) sectional summaries of the total Boeing weight responsibility for each missile covered by this report, (2) a sectional summary of the components whose mean weights are used in lieu of actual weights, (3) summary check lists by missile section, (4) a list of Engineering Change Proposals incorporated on the hardware included in this report, and (5) actual weighing records for the interstages, the aft skirt, and the base heat deflectors.

The actual weighing records for the major components covered by this report can be found in section 6 (pages 25 through 72). In order to limit the size of this report, weighing diagrams and inventory lists have been omitted for all but the first unit of each interstage and skirt since the components have all been weighed in the "complete" condition. However, these records are on file and can be supplied if necessary. The change records found in section 6 are listed in order by serial number for each major component in order to assist in cross referencing the components in case of substitution at a later date.

This report contains no weight and balance summary data for missile 658 even though the latest schedule lists this as a Wing II missile. However, when the components were manufactured, this position was scheduled for a Wing I missile so no Wing II components were made. Components for this missile will be reallocated at Air Force Plant 77 from those on hand there.

1.4 CTLI PROVISIONS

The only CTLI provisions incorporated into this report are those components which are installed on every operational missile. The mass properties data for CTLI components which will be added at Vandenberg Air Force Base are reported in reference 1.1.3.

1.5 WEIGHING PROCEDURES

A description of the weighing procedures and an accuracy statement will be found in reference 1.1.4.

1.6 ENGINEERING CHANGE PROPOSAL (ECP) SUMMARY

See page 24 for a list of the ECP's incorporated on the Boeing components covered by this report. The ECP's listed are those not covered by the latest revision to "Model Specification for Guided Missile Main Assemblage, S-133-1000-0-1", Dated 25 October 1962.

WING II
OPERATIONAL AND CTLI MISSILE STATION DIAGRAM

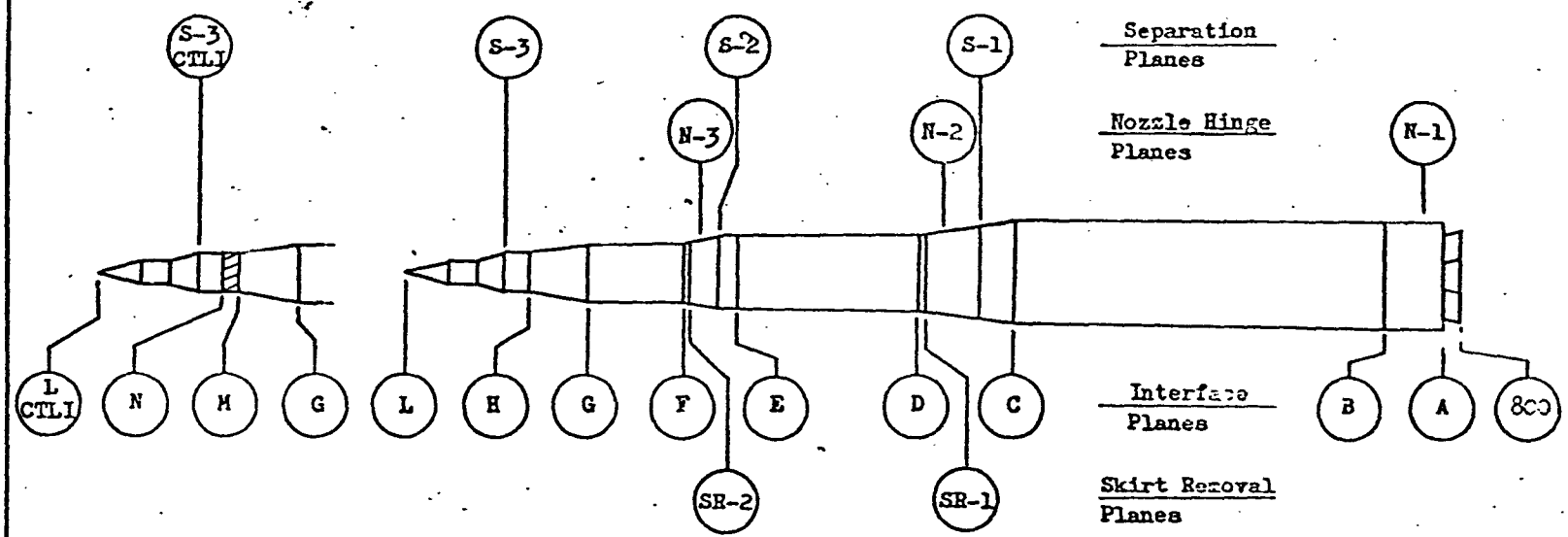

▷ These Missile Stations become 50.000 when converted to Boeing Section Stations.

SEPARATION PLANES	MISSILE STA	INTERFACE PLANES	MISSILE STA
S-1	501.66	A	784.24
S-2	342.93	B ▷	748.24
S-3	210.55	C ▷	525.60
S-3 CTLI	200.53	D ▷	466.52
		E ▷	357.58
SKIRT REMOVAL PLANES		F ▷	319.23
SR-1	466.97	G ▷	257.45
SR-2	319.74	H ▷	225.95
		L	129.48
NOZZLE HINGE PLANES			
N-1	770.03	M ▷	225.95
N-2	477.32	N ▷	215.95
N-3	327.33	L CTLI	119.46

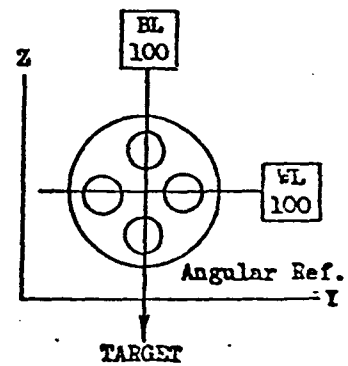

Reference
STL Release 9862.6-513
(17 December 1962)

3.1 MISSILE NO. 653
WEIGHT AND BALANCE SUMMARY
MAJOR COMPONENTS S/N **

REPORT NO. _____
DATE _____

LINE	SEC.	DESCRIPTION	DATA	EXPENDED WEIGHT (LB)	TOTAL WEIGHT (LB)	CENTER OF GRAVITY LONG.*	CENTER OF GRAVITY LAT.	CENTER OF GRAVITY VERT.	INERTIA SLUG FT2x10-3 ROLL	INERTIA SLUG FT2x10-3 PITCH
1	41	RV Spacer								
2			Silo							
3			Aero							
4	39	CTLI Section								
5			Silo							
6			Aero							
7	42	G&C Section			1.02	80.94	100.00	100.00	0	0
8			Silo							
9			Aero							
10	44	3rd Stage Engine			18.60	97.33	106.53	111.49	0	.003
11		S/N 0000918	Silo	.43		94.95	110.30	117.70	0	0
12			Aero	.80		94.95	110.30	117.70	0	0
13			Base	.20		131.00	100.00	100.00	0	0
14	45	Interstage 2-3			119.45	59.99	100.18	101.48	.010	.006
15		(Fwd)	Silo							
16		S/N 0000915	Aero							
17			Base	2.81		57.33	107.51	108.65	0	0
18			Silo	1.92		61.11	101.01	101.74	0	0
19		Jettisoned	Aero	3.40		61.59	100.27	100.47	0	0
20		Portion	Base							
21			Jett	86.81		61.99	99.02	100.65	.008	.005
22	45	Interstage 2-3			63.58	80.64	99.30	101.39	.006	.003
23		(Aft)	Silo	1.18		80.97	100.50	100.84	0	0
24			Aero	1.18		82.00	103.07	105.23	0	0
25	46	2nd Stage Engine			32.53	145.65	105.89	110.24	.001	.018
26		S/N 0000918	Silo	.63		99.62	112.30	121.20	0	0
27			Aero	.53		99.62	112.30	121.20	0	0
28			Base	1.80		189.25	100.00	100.00	0	0
29	47	Interstage 1-2			242.56	67.44	99.61	101.54	.032	.022
30		(Fwd)	Silo							
31		S/N 0000915	Aero							
32			Base	3.10		64.06	112.35	115.53	0	0
33			Silo	4.21		66.61	100.32	100.55	.001	0
34		Jettisoned	Aero	7.56		66.87	100.10	100.17	.001	.001
35		Portion	Base	5.40		67.09	100.27	100.76	.001	0
36			Jett	197.79		68.97	98.71	100.97	.028	.018
37	47	Interstage 1-2			128.74	96.61	100.76	99.76	.024	.014
38		(Aft)	Silo	3.37		96.69	100.34	100.59	.001	0
39			Aero	3.41		97.71	101.98	103.41	.001	0
40	48	1st Stage Engine			63.08	223.60	110.32	117.51	.004	.115
41		S/N 0000918	Silo	2.89		190.41	111.84	120.45	0	.004
42			Aero	1.04		136.60	117.20	129.70	0	.001
43			Base	4.80		309.40	100.00	100.00	0	0
44	49	Skirt			290.27	68.46	100.74	101.07	.064	.039
45		S/N 0000198	Silo	17.57		68.02	100.35	100.60	.004	.002
46			Aero	3.33		67.80	100.64	101.12	.001	0
47			Base	40.60		69.10	101.70	102.76	.009	.006
48		MISSILE			959.83					
49			Silo	32.20						
50			Aero	21.25						
51			Base	58.71						
52			Jett	284.60						

* Boeing Section Stations (See Missile Station Diagram)
2-5550-0-58
** Serial numbers shown under section in description column.

3.2. MISSILE NO. 655
WEIGHT AND BALANCE SUMMARY
MAJOR COMPONENTS S/N 0000199

REPORT NO. _____
DATE _____

LINE	SEC.	DESCRIPTION	DATA	EXPENDED WEIGHT (LB)	TOTAL WEIGHT (LB)	CENTER OF GRAVITY LONG.*	CENTER OF GRAVITY LAT.	CENTER OF GRAVITY VERT.	INERTIA SLUG FT2x10-3 ROLL	INERTIA SLUG FT2x10-3 PITCH
1	41	RV Spacer								
2			Silo							
3			Aero							
4	39	CTLI Section								
5			Silo							
6			Aero							
7	42	G&C Section			1.02	80.94	100.00	100.00	0	0
8			Silo							
9			Aero							
10	44	3rd Stage Engine			18.52	97.17	106.56	111.54	0	.003
11			Silo	.43		94.95	110.30	117.70	0	0
12			Aero	.80		94.95	110.30	117.70	0	0
13			Base	.20		131.00	100.00	100.00	0	0
14	45	Interstage 2-3			119.84	59.83	100.30	101.46	.010	.006
15		(Fwd)	Silo							
16			Aero							
17			Base	2.81		57.33	107.51	108.65	0	0
18			Silo	1.92		61.11	101.01	101.74	0	0
19		Jettisoned	Aero	3.40		61.59	100.27	100.47	0	0
20		Portion	Base							
21			Jett	87.20		61.75	99.18	100.62	.008	.005
22	45	Interstage 2-3			63.84	80.64	99.30	101.39	.006	.003
23		(Aft)	Silo	1.18		80.97	100.50	100.84	0	0
24			Aero	1.18		82.00	103.07	105.23	0	0
25	46	2nd Stage Engine			32.34	145.38	105.92	110.30	.001	.018
26			Silo	.63		99.62	112.30	121.20	0	0
27			Aero	.53		99.62	112.30	121.20	0	0
28			Base	1.80		189.25	100.00	100.00	0	0
29	47	Interstage 1-2			243.41	67.48	99.60	101.43	.032	.022
30		(Fwd)	Silo							
31			Aero							
32			Base	3.10		64.06	112.35	115.53	0	0
33			Silo	4.21		66.61	100.32	100.55	.001	0
34		Jettisoned	Aero	7.56		66.87	100.10	100.17	.001	.001
35		Portion	Base	5.40		67.09	100.27	100.76	.001	0
36			Jett	198.64		69.02	98.71	100.83	.028	.018
37	47	Interstage 1-2			129.24	96.61	100.76	99.76	.024	.014
38		(Aft)	Silo	3.37		96.69	100.34	100.59	.001	0
39			Aero	3.41		97.71	101.98	103.41	.001	0
40	48	1st Stage Engine			63.18	223.75	110.30	117.48	.004	.115
41			Silo	2.89		190.41	111.84	120.45	0	.004
42			Aero	1.04		136.60	117.20	129.70	0	.001
43			Base	4.80		309.40	100.00	100.00	0	0
44	49	Skirt			289.97	68.48	100.80	101.01	.064	.039
45			Silo	17.57		[illegible].02	100.35	100.60	.004	.002
46			Aero	3.33		67.80	100.64	101.12	.001	0
47			Base	40.60		69.10	101.70	102.76	.009	.006
48		MISSILE			961.36					
49			Silo	32.20						
50			Aero	21.25						
51			Base	58.71						
52			Jett	285.84						

* Boeing Section Stations (See Missile Station Diagram)

2-5550-0-58

3.3 MISSILE NO. 660
WEIGHT AND BALANCE SUMMARY
MAJOR COMPONENTS S/N 0000200

REPORT NO. _____
DATE _____

LINE	SEC.	DESCRIPTION	DATA	EXPENDED WEIGHT (LB)	TOTAL WEIGHT (LB)	CENTER OF GRAVITY LONG.*	CENTER OF GRAVITY LAT.	CENTER OF GRAVITY VERT.	INERTIA SLUG FT2x10-3 ROLL	INERTIA SLUG FT2x10-3 PITCH
1	41	RV Spacer								
2			Silo							
3			Aero							
4	39	CTLI Section								
5			Silo							
6			Aero							
7	42	G&C Section			1.02	80.94	100.00	100.00	0	0
8			Silo							
9			Aero							
10	44	3rd Stage Engine			18.65	97.43	106.52	111.46	0	.003
11			Silo	.43		94.95	110.30	117.70	0	0
12			Aero	.80		94.95	110.30	117.70	0	0
13			Base	.20		131.00	100.00	100.00	0	0
14	45	Interstage 2-3			119.72	59.93	100.23	101.52	.010	.006
15		(Fwd)	Silo							
16			Aero							
17			Base	2.81		57.33	107.51	108.65	0	0
18			Silo	1.92		61.11	101.01	101.74	0	0
19		Jettisoned	Aero	3.40		61.59	100.27	100.47	0	0
20		Portion	Base							
21			Jett	87.08		61.90	99.08	100.71	.008	.005
22	45	Interstage 2-3			63.76	80.64	99.30	101.39	.006	.003
23		(Aft)	Silo	1.18		80.97	100.50	100.84	0	0
24			Aero	1.18		82.00	103.07	105.23	0	0
25	46	2nd Stage Engine			32.52	145.64	105.89	110.25	.001	.018
26			Silo	.63		99.62	112.30	121.20	0	0
27			Aero	.53		99.62	112.30	121.20	0	0
28			Base	1.80		189.25	100.00	100.00	0	0
29	47	Interstage 1-2			244.20	67.59	99.49	101.42	.032	.022
30		(Fwd)	Silo							
31			Aero							
32			Base	3.10		64.06	112.35	115.53	0	0
33			Silo	4.21		66.61	100.32	100.55	.001	0
34		Jettisoned	Aero	7.56		66.87	100.10	100.17	.001	.001
35		Portion	Base	5.40		67.09	100.27	100.76	.001	0
36			Jett	199.43		69.15	98.57	100.83	.028	.018
37	47	Interstage 1-2			129.70	96.61	100.76	99.76	.024	.014
38		(Aft)	Silo	3.37		96.69	100.34	100.59	.001	0
39			Aero	3.41		97.71	101.98	103.41	.001	0
40	48	1st Stage Engine			63.13	223.68	110.31	117.50	.004	.115
41			Silo	2.89		190.41	111.84	120.45	0	.004
42			Aero	1.04		136.60	117.20	129.70	0	.001
43			Base	4.80		309.40	100.00	100.00	0	0
44	49	Skirt			291.12	68.49	100.96	100.98	.064	.039
45			Silo	17.57		68.02	100.35	100.60	.004	.002
46			Aero	3.33		67.80	100.64	101.12	.001	0
47			Base	40.60		69.10	101.70	102.76	.009	.006
48		MISSILE			963.82					
49			Silo	32.20						
50			Aero	21.25						
51			Base	58.71						
52			Jett	286.51						

* Boeing Section Stations (See Missile Station Diagram)

2-5550-0-58

3.4 MISSILE NO. 662
WEIGHT AND BALANCE SUMMARY
MAJOR COMPONENTS S/N **

REPORT NO. _____
DATE _____

LINE	SEC.	DESCRIPTION	DATA	EXPENDED WEIGHT (LB)	TOTAL WEIGHT (LB)	CENTER OF GRAVITY LONG.*	CENTER OF GRAVITY LAT.	CENTER OF GRAVITY VERT.	INERTIA SLUG FT²x10-3 ROLL	INERTIA SLUG FT²x10-3 PITCH
1	41	RV Spacer								
2			Silo							
3			Aero							
4	39	CTLI Section								
5			Silo							
6			Aero							
7	42	G&C Section			1.02	80.94	100.00	100.00	0	0
8			Silo							
9			Aero							
10	44	3rd Stage Engine			18.60	97.33	106.53	111.49	0	.003
11		S/N 0000919	Silo	.43		94.95	110.30	117.70	0	0
12			Aero	.80		94.95	110.30	117.70	0	0
13			Base	.20		131.00	100.00	100.00	0	0
14	45	Interstage 2-3			119.27	59.93	100.21	101.48	.010	.006
15		(Fwd)	Silo							
16			Aero							
17			Base	2.81		57.33	107.51	108.65	0	0
18			Silo	1.92		61.11	101.01	101.74	0	0
19		Jettisoned	Aero	3.40		61.59	100.27	100.47	0	0
20		Portion	Base							
21			Jett	86.63		61.90	99.05	100.65	.008	.005
22	45	Interstage 2-3			63.46	80.64	99.30	101.39	.006	.003
23		(Aft)	Silo	1.18		80.97	100.50	100.84	0	0
24			Aero	1.18		82.00	103.07	105.23	0	0
25	46	2nd Stage Engine			32.31	145.33	105.93	110.31	.001	.018
26		S/N 0000917	Silo	.63		99.62	112.30	121.20	0	0
27			Aero	.53		99.62	112.30	121.20	0	0
28			Base	1.80		189.25	100.00	100.00	0	0
29	47	Interstage 1-2			242.84	67.44	99.56	101.65	.032	.022
30		(Fwd)	Silo							
31		S/N 0000917	Aero							
32			Base	3.10		64.06	112.35	115.53	0	0
33			Silo	4.21		66.61	100.32	100.55	.001	0
34		Jettisoned	Aero	7.56		66.87	100.10	100.17	.001	.001
35		Portion	Base	5.40		67.09	100.27	100.76	.001	0
36			Jett	198.07		68.97	98.65	101.11	.028	.018
37	47	Interstage 1-2			128.91	96.61	100.76	99.76	.024	.014
38		(Aft)	Silo	3.37		96.69	100.34	100.59	.001	0
39			Aero	3.41		97.71	101.98	103.41	.001	0
40	48	1st Stage Engine			63.16	223.72	110.31	117.49	.004	.115
41		S/N 0000917	Silo	2.89		190.41	111.84	120.45	0	.004
42			Aero	1.04		136.60	117.20	129.70	0	.001
43			Base	4.80		309.40	100.00	100.00	0	0
44	49	Skirt			285.12	68.39	100.58	101.17	.064	.039
45		S/N 0000201	Silo	17.57		68.02	100.35	100.60	.004	.002
46			Aero	3.33		67.80	100.64	101.12	.001	0
47			Base	40.60		69.10	101.70	102.76	.009	.006
48		MISSILE			954.69					
49			Silo	32.20						
50			Aero	21.25						
51			Base	58.71						
52			Jett	284.70						

* Boeing Section Stations (See Missile Station Diagram)
2-5550-0-58

** Serial numbers of major components shown under section of description column.

3.5 MISSILE NO. 667
WEIGHT AND BALANCE SUMMARY
MAJOR COMPONENTS S/N 0000201**

REPORT NO. _____
DATE _____

LINE	SEC.	DESCRIPTION	DATA	EXPENDED WEIGHT (LB)	TOTAL WEIGHT (LB)	CENTER OF GRAVITY LONG.*	CENTER OF GRAVITY LAT.	CENTER OF GRAVITY VERT.	INERTIA SLUG FT2x10-3 ROLL	INERTIA SLUG FT2x10-3 PITCH
1	41	RV Spacer								
2			Silo							
3			Aero							
4	39	CTLI Section								
5			Silo							
6			Aero							
7	42	G&C Section			1.02	80.94	100.00	100.00	0	0
8			Silo							
9			Aero							
10	44	3rd Stage Engine			18.53	97.19	106.56	111.54	0	.003
11			Silo	.43		94.95	110.30	117.70	0	0
12			Aero	.80		94.95	110.30	117.70	0	0
13			Base	.20		131.00	100.00	100.00	0	0
14	45	Interstage 2-3			119.81	59.98	100.37	101.45	.010	.006
15		(Fwd)	Silo							
16			Aero							
17			Base	2.81		57.33	107.51	108.65	0	0
18			Silo	1.92		61.11	101.01	101.74	0	0
19		Jettisoned	Aero	3.40		61.59	100.27	100.47	0	0
20		Portion	Base							
21			Jett	87.17		61.97	99.28	100.61	.008	.005
22	45	Interstage 2-3			63.82	80.64	99.30	101.39	.006	.003
23		(Aft)	Silo	1.18		80.97	100.50	100.84	0	0
24			Aero	1.18		82.00	103.07	105.23	0	0
25	46	2nd Stage Engine			32.38	145.44	105.92	110.29	.001	.018
26			Silo	.63		99.62	112.30	121.20	0	0
27			Aero	.53		99.62	112.30	121.20	0	0
28			Base	1.80		189.25	100.00	100.00	0	0
29	47	Interstage 1-2			241.96	67.58	99.80	101.56	.032	.022
30		(Fwd)	Silo							
31			Aero							
32			Base	3.10		64.06	112.35	115.53	0	0
33			Silo	4.21		66.61	100.32	100.55	.001	0
34		Jettisoned	Aero	7.56		66.87	100.10	100.17	.001	.001
35		Portion	Base	5.40		67.09	100.27	100.76	.001	0
36			Jett	197.19		69.15	98.94	100.99	.028	.018
37	47	Interstage 1-2			128.39	96.61	100.76	99.76	.024	.014
38		(Aft)	Silo	3.37		96.69	100.34	100.59	.001	0
39			Aero	3.41		97.71	101.98	103.41	.001	0
40	48	1st Stage Engine			63.20	223.78	110.30	117.48	.004	.115
41			Silo	2.89		190.41	111.84	120.45	0	.004
42			Aero	1.04		136.60	117.20	129.70	0	.001
43			Base	4.80		309.40	100.00	100.00	0	0
44	49	Skirt			290.57	68.22	100.80	101.06	.064	.039
45			Silo	17.57		68.02	100.35	100.60	.004	.002
46			Aero	3.33		67.80	100.64	101.12	.001	0
47			Base	40.60		69.10	101.70	102.76	.009	.006
48		MISSILE			959.68					
49			Silo	32.20						
50			Aero	21.25						
51			Base	58.71						
52			Jett	284.36						

* Boeing Section Stations (See Missile Station Diagram)

2-5550-0-58

** Aft Skirt S/N 0000202

3.6 MISSILE NO. 669
WEIGHT AND BALANCE SUMMARY
MAJOR COMPONENTS S/N 0000202**

REPORT NO. _____
DATE _____

LINE	SEC.	DESCRIPTION	DATA	EXPENDED WEIGHT (LB)	TOTAL WEIGHT (LB)	CENTER OF GRAVITY LONG.*	CENTER OF GRAVITY LAT.	CENTER OF GRAVITY VERT.	INERTIA SLUG FT2x10-3 ROLL	INERTIA SLUG FT2x10-3 PITCH
1	41	RV Spacer								
2			Silo							
3			Aero							
4	39	CTLI Section								
5			Silo							
6			Aero							
7	42	G&C Section			1.02	80.94	100.00	100.00	0	0
8			Silo							
9			Aero							
10	44	3rd Stage Engine			18.69	97.50	106.50	111.44	0	.003
11			Silo	.43		94.95	110.30	117.70	0	0
12			Aero	.80		94.95	110.30	117.70	0	0
13			Base	.20		131.00	100.00	100.00	0	0
14	45	Interstage 2-3			119.57	59.80	100.25	101.42	.010	.006
15		(Fwd)	Silo							
16			Aero							
17			Base	2.81		57.33	107.51	108.65	0	0
18			Silo	1.92		61.11	101.01	101.74	0	0
19		Jettisoned	Aero	3.40		61.59	100.27	100.47	0	0
20		Portion	Base							
21			Jett	86.93		61.72	99.10	100.56	.008	.005
22	45	Interstage 2-3			63.66	80.64	99.30	101.39	.006	.003
23		(Aft)	Silo	1.18		80.97	100.50	100.84	0	0
24			Aero	1.18		82.00	103.07	105.23	0	0
25	46	2nd Stage Engine			32.27	145.28	105.94	110.33	.001	.018
26			Silo	.63		99.62	112.30	121.20	0	0
27			Aero	.53		99.62	112.30	121.20	0	0
28			Base	1.80		189.25	100.00	100.00	0	0
29	47	Interstage 1-2			244.01	67.74	99.56	101.38	.032	.022
30		(Fwd)	Silo							
31			Aero							
32			Base	3.10		64.06	112.35	115.53	0	0
33			Silo	4.21		66.61	100.32	100.55	.001	0
34		Jettisoned	Aero	7.56		66.87	100.10	100.17	.001	.001
35		Portion	Base	5.40		67.09	100.27	100.76	.001	0
36			Jett	199.24		69.33	98.67	100.77	.028	.018
37	47	Interstage 1-2			129.59	96.61	100.76	99.76	.024	.014
38		(Aft)	Silo	3.37		96.69	100.34	100.59	.001	0
39			Aero	3.41		97.71	101.98	103.41	.001	0
40	48	1st Stage Engine			63.74	224.59	110.21	117.33	.004	.115
41			Silo	2.89		190.41	111.84	120.45	0	.004
42			Aero	1.04		136.60	117.20	129.70	0	.001
43			Base	4.80		309.40	100.00	100.00	0	0
44	49	Skirt			288.72	68.47	100.70	101.16	.064	.039
45			Silo	17.57		68.02	100.35	100.60	.004	.002
46			Aero	3.33		67.80	100.64	101.12	.001	0
47			Base	40.60		69.10	101.70	102.76	.009	.006
48		MISSILE			961.27					
49			Silo	32.20						
50			Aero	21.25						
51			Base	58.71						
52			Jett	286.17						

* Boeing Section Stations (See Missile Station Diagram)
2-5550-0-58

** Aft Skirt S/N 0000203

3.7 MISSILE NO. 674
WEIGHT AND BALANCE SUMMARY
MAJOR COMPONENTS S/N 0000203**

REPORT NO. _____
DATE _____

LINE	SEC.	DESCRIPTION	DATA	EXPENDED WEIGHT (LB)	TOTAL WEIGHT (LB)	CENTER OF GRAVITY LONG.*	CENTER OF GRAVITY LAT.	CENTER OF GRAVITY VERT.	INERTIA SLUG FT2x10-3 ROLL	INERTIA SLUG FT2x10-3 PITCH
1	41	RV Spacer								
2			Silo							
3			Aero							
4	39	CTLI Section								
5			Silo							
6			Aero							
7	42	G&C Section			1.02	80.94	100.00	100.00	0	0
8			Silo							
9			Aero							
10	44	3rd Stage Engine			18.64	97.41	106.52	111.47	0	.003
11			Silo	.43		94.95	110.30	117.70	0	0
12			Aero	.80		94.95	110.30	117.70	0	0
13			Base	.20		131.00	100.00	100.00	0	0
14	45	Interstage 2-3			119.24	59.97	100.22	101.50	.010	.006
15		(Fwd)	Silo							
16			Aero							
17			Base	2.81		57.33	107.51	108.65	0	0
18			Silo	1.92		61.11	101.01	101.74	0	0
19		Jettisoned	Aero	3.40		61.59	100.27	100.47	0	0
20		Portion	Base							
21			Jett	86.60		61.97	99.07	100.67	.008	.005
22	45	Interstage 2-3			63.44	80.64	99.30	101.39	.006	.003
23		(Aft)	Silo	1.18		80.97	100.50	100.84	0	0
24			Aero	1.18		82.00	103.07	105.23	0	0
25	46	2nd Stage Engine			32.52	145.64	105.89	110.25	.001	.018
26			Silo	.63		99.62	112.30	121.20	0	0
27			Aero	.53		99.62	112.30	121.20	0	0
28			Base	1.80		189.25	100.00	100.00	0	0
29	47	Interstage 1-2			243.47	67.35	99.57	101.50	.032	.022
30		(Fwd)	Silo							
31			Aero							
32			Base	3.10		64.06	112.35	115.53	0	0
33			Silo	4.21		66.61	100.32	100.55	.001	0
34		Jettisoned	Aero	7.56		66.87	100.10	100.17	.001	.001
35		Portion	Base	5.40		67.09	100.27	100.76	.001	0
36			Jett	198.70		68.85	98.67	100.92	.028	.018
37	47	Interstage 1-2			129.28	96.61	100.76	99.76	.024	.014
38		(Aft)	Silo	3.37		96.69	100.34	100.59	.001	0
39			Aero	3.41		97.71	101.98	103.41	.001	0
40	48	1st Stage Engine			63.25	223.86	110.29	117.46	.004	.115
41			Silo	2.89		190.41	111.84	120.45	0	.004
42			Aero	1.04		136.60	117.20	129.70	0	.001
43			Base	4.80		309.40	100.00	100.00	0	0
44	49	Skirt			287.37	68.47	100.80	101.12	.064	.039
45			Silo	17.57		68.02	100.35	100.60	.004	.002
46			Aero	3.33		67.80	100.64	101.12	.001	0
47			Base	40.60		69.10	101.70	102.76	.009	.006
48		MISSILE			958.23					
49			Silo	32.20						
50			Aero.	21.25						
51			Base	58.71						
52			Jett	285.30						

* Boeing Section Stations (See Missile Station Diagram)
2-5550-0-58
** Aft Skirt S/N 0000919

3.8 MISSILE NO. 676
WEIGHT AND BALANCE SUMMARY
MAJOR COMPONENTS S/N 0000204

REPORT NO. _____
DATE

LINE	SEC.	DESCRIPTION	DATA	EXPENDED WEIGHT (LB)	TOTAL WEIGHT (LB)	CENTER OF GRAVITY LONG.*	CENTER OF GRAVITY LAT.	CENTER OF GRAVITY VERT.	INERTIA SLUG FT2x10-3 ROLL	INERTIA SLUG FT2x10-3 PITCH
1	41	RV Spacer								
2			Silo							
3			Aero							
4	39	CTLI Section								
5			Silo							
6			Aero							
7	42	G&C Section			1.02	80.94	100.00	100.00	0	0
8			Silo							
9			Aero							
10	44	3rd Stage Engine			18.64	97.41	106.52	111.47	0	.003
11			Silo	.43		94.95	110.30	117.70	0	0
12			Aero	.80		94.95	110.30	117.70	0	0
13			Base	.20		131.00	100.00	100.00	0	0
14	45	Interstage 2-3			119.30	59.97	100.27	101.44	.010	.006
15		(Fwd)	Silo							
16			Aero							
17			Base	2.81		57.33	107.51	108.65	0	0
18			Silo	1.92		61.11	101.01	101.74	0	0
19		Jettisoned	Aero	3.40		61.59	100.27	100.47	0	0
20		Portion	Base							
21			Jett	86.66		61.97	99.14	100.59	.008	.005
22	45	Interstage 2-3			63.48	80.64	99.30	101.39	.006	.003
23		(Aft)	Silo	1.18		80.97	100.50	100.84	0	0
24			Aero	1.18		82.00	103.07	105.23	0	0
25	46	2nd Stage Engine			32.28	145.29	105.93	110.32	.001	.018
26			Silo	.63		99.62	112.30	121.20	0	0
27			Aero	.53		99.62	112.30	121.20	0	0
28			Base	1.80		189.25	100.00	100.00	0	0
29	47	Interstage 1-2			243.98	67.38	99.43	101.53	.032	.022
30		(Fwd)	Silo							
31			Aero							
32			Base	3.10		64.06	112.35	115.53	0	0
33			Silo	4.21		66.61	100.32	100.55	.001	0
34		Jettisoned	Aero	7.56		66.87	100.10	100.17	.001	.001
35		Portion	Base	5.40		67.09	100.27	100.76	.001	0
36			Jett	199.21		68.89	98.50	100.97	.028	.018
37	47	Interstage 1-2			129.57	96.61	100.76	99.76	.024	.014
38		(Aft)	Silo	3.37		96.69	100.34	100.59	.001	0
39			Aero	3.41		97.71	101.98	103.41	.001	0
40	48	1st Stage Engine			62.93	223.37	110.34	117.55	.004	.115
41			Silo	2.89		190.41	111.84	120.45	0	.004
42			Aero	1.04		136.60	117.20	129.70	0	.001
43			Base	4.80		309.40	100.00	100.00	0	0
44	49	Skirt			291.32	68.57	100.74	101.16	.064	.039
45			Silo	17.57		68.02	100.35	100.60	.004	.002
46			Aero	3.33		67.80	100.64	101.12	.001	0
47			Base	40.60		69.10	101.70	102.76	.009	.006
48		MISSILE			962.52					
49			Silo	32.20						
50			Aero	21.25						
51			Base	58.71						
52			Jett	285.87						

* Boeing Section Stations (See Missile Station Diagram)

3.9 MISSILE NO. 679
WEIGHT AND BALANCE SUMMARY
MAJOR COMPONENTS S/N 0000211

REPORT NO. _____
DATE

LINE	SEC.	DESCRIPTION	DATA	EXPENDED WEIGHT (LB)	TOTAL WEIGHT (LB)	CENTER OF GRAVITY LONG.*	CENTER OF GRAVITY LAT.	CENTER OF GRAVITY VERT.	INERTIA SLUG FT2x10-3 ROLL	INERTIA SLUG FT2x10-3 PITCH
1	41	RV Spacer								
2			Silo							
3			Aero							
4	39	CTLI Section								
5			Silo							
6			Aero							
7	42	G&C Section			1.02	80.94	100.00	100.00	0	0
8			Silo							
9			Aero							
10	44	3rd Stage Engine			18.64	97.41	106.52	111.47	0	.003
11			Silo	.43		94.95	110.30	117.70	0	0
12			Aero	.80		94.95	110.30	117.70	0	0
13			Base	.20		131.00	100.00	100.00	0	0
14	45	Interstage 2-3			119.03	59.95	100.18	101.60	.010	.006
15		(Fwd)	Silo							
16			Aero							
17			Base	2.81		57.33	107.51	108.65	0	0
18			Silo	1.92		61.11	101.01	101.74	0	0
19		Jettisoned	Aero	3.40		61.59	100.27	100.47	0	0
20		Portion	Base							
21			Jett	86.39		61.94	99.02	100.80	.008	.005
22	45	Interstage 2-3			63.30	80.64	99.30	101.39	.006	.003
23		(Aft)	Silo	1.18		80.97	100.50	100.84	0	0
24			Aero	1.18		82.00	103.07	105.23	0	0
25	46	2nd Stage Engine			32.16	145.11	105.96	110.36	.001	.018
26			Silo	.63		99.62	112.30	121.20	0	0
27			Aero	.53		99.62	112.30	121.20	0	0
28			Base	1.80		189.25	100.00	100.00	0	0
29	47	Interstage 1-2			243.19	67.48	99.59	101.40	.032	.022
30		(Fwd)	Silo							
31			Aero							
32			Base	3.10		64.06	112.35	115.53	0	0
33			Silo	4.21		66.61	100.32	100.55	.001	0
34		Jettisoned	Aero	7.56		66.87	100.10	100.17	.001	.001
35		Portion	Base	5.40		67.09	100.27	100.76	.001	0
36			Jett	198.42		69.02	98.70	100.80	.028	.018
37	47	Interstage 1-2			129.11	95.61	100.76	99.76	.024	.014
38		(Aft)	Silo	3.37		96.69	100.34	100.59	.001	0
39			Aero	3.41		97.71	101.98	103.41	.001	0
40	48	1st Stage Engine			63.15	223.71	110.31	117.49	.004	.115
41			Silo	2.89		130.41	111.84	120.45	0	.004
42			Aero	1.04		136.60	117.20	129.70	0	.001
43			Base	4.80		309.40	100.00	100.00	0	0
44	49	Skirt			292.22	68.43	100.84	101.05	.064	.039
45			Silo	17.57		68.02	100.35	100.60	.004	.002
46			Aero	3.33		67.80	100.64	101.12	.001	0
47			Base	40.60		69.10	101.70	102.76	.009	.006
48		MISSILE			961.82					
49			Silo	32.20						
50			Aero	21.25						
51			Base	58.71						
52			Jett	284.81						

* Boeing Section Stations (See Missile Station Diagram)

3.10 MISSILE NO. 681
WEIGHT AND BALANCE SUMMARY
MAJOR COMPONENTS S/N 0000205

REPORT NO. _____
DATE _____

LINE	SEC.	DESCRIPTION	DATA	EXPENDED WEIGHT (LB)	TOTAL WEIGHT (LB)	CENTER OF GRAVITY LONG.*	LAT.	VERT.	INERTIA SLUG FT2x10-3 ROLL	PITCH
1	41	RV Spacer								
2			Silo							
3			Aero							
4	39	CTLI Section								
5			Silo							
6			Aero							
7	42	G&C Section			1.02	80.94	100.00	100.00	0	0
8			Silo							
9			Aero							
10	44	3rd Stage Engine			18.69	97.50	106.50	111.44	0	.003
11			Silo	.43		94.95	110.30	117.70	0	0
12			Aero	.80		94.95	110.30	117.70	0	0
13			Base	.20		131.00	100.00	100.00	0	0
14	45	Interstage 2-3			119.06	59.84	100.27	101.50	.010	.006
15		(Fwd)	Silo							
16			Aero							
17			Base	2.81		57.33	107.51	108.65	0	0
18			Silo	1.92		61.11	101.01	101.74	0	0
19		Jettisoned	Aero	3.40		61.59	100.27	100.47	0	0
20		Portion	Base							
21			Jett	86.42		61.79	99.13	100.67	.008	.005
22	45	Interstage 2-3			63.32	80.64	99.30	101.39	.006	.003
23		(Aft)	Silo	1.18		80.97	100.50	100.84	0	0
24			Aero	1.18		82.00	103.07	105.23	0	0
25	46	2nd Stage Engine			32.57	145.71	105.88	110.23	.001	.018
26			Silo	.63		99.62	112.30	121.20	0	0
27			Aero	.53		99.62	112.30	121.20	0	0
28			Base	1.80		189.25	100.00	100.00	0	0
29	47	Interstage 1-2			244.67	67.59	99.55	101.47	.032	.022
30		(Fwd)	Silo							
31			Aero							
32			Base	3.10		64.06	112.35	115.53	0	0
33			Silo	4.21		66.61	100.32	100.55	.001	0
34		Jettisoned	Aero	7.56		66.87	100.10	100.17	.001	.001
35		Portion	Base	5.40		67.09	100.27	100.76	.001	0
36			Jett	199.90		69.14	98.66	100.89	.028	.018
37	47	Interstage 1-2			129.98	95.61	100.76	99.76	.024	.014
38		(Aft)	Silo	3.37		96.69	100.34	100.59	.001	0
39			Aero	3.41		97.71	101.98	103.41	.001	0
40	48	1st Stage Engine			63.23	223.83	110.30	117.47	.004	.115
41			Silo	2.89		190.41	111.84	120.45	0	.004
42			Aero	1.04		136.60	117.20	129.70	0	.001
43			Base	4.80		309.40	100.00	100.00	0	0
44	49	Skirt			290.12	68.48	100.70	101.11	.064	.039
45			Silo	17.57		68.02	100.35	100.60	.004	.002
46			Aero	3.33		67.80	100.64	101.12	.001	0
47			Base	40.60		69.10	101.70	102.76	.009	.006
48		MISSILE			962.66					
49			Silo	32.20						
50			Aero	21.25						
51			Base	58.71						
52			Jett	286.32						

* Boeing Section Stations (See Missile Station Diagram)

2-5550-0-58

J.11 MISSILE NO. 683
WEIGHT AND BALANCE SUMMARY
MAJOR COMPONENTS S/N 0000212

REPORT NO. _____
DATE _____

LINE	SEC.	DESCRIPTION	DATA	EXPENDED WEIGHT (LB)	TOTAL WEIGHT (LB)	CENTER OF GRAVITY LONG.*	CENTER OF GRAVITY LAT.	CENTER OF GRAVITY VERT.	INERTIA SLUG FT2x10-3 ROLL	INERTIA SLUG FT2x10-3 PITCH
1	41	RV Spacer								
2			Silo							
3			Aero							
4	39	CTLI Section								
5			Silo							
6			Aero							
7	42	G&C Section			1.02	80.94	100.00	100.00	0	0
8			Silo							
9			Aero							
10	44	3rd Stage Engine			18.69	97.50	106.50	111.44	0	.003
11			Silo	.43		94.95	110.30	117.70	0	0
12			Aero	.80		94.95	110.30	117.70	0	0
13			Base	.20		131.00	100.00	100.00	0	0
14	45	Interstage 2-3			118.82	59.68	100.27	101.22	.010	.006
15		(Fwd)	Silo							
16			Aero							
17			Base	2.81		57.33	107.51	108.65	0	0
18			Silo	1.92		61.11	101.01	101.74	0	0
19		Jettisoned	Aero	3.40		61.59	100.27	100.47	0	0
20		Portion	Base							
21			Jett	86.18		61.58	99.14	100.27	.008	.005
22	45	Interstage 2-3			63.16	8.64	99.30	101.39	.006	.003
23		(Aft)	Silo	1.18		80.97	100.50	100.84	0	0
24			Aero	1.18		82.00	103.07	105.23	0	0
25	46	2nd Stage Engine			32.64	145.81	105.87	110.21	.001	.018
26			Silo	.63		99.62	112.30	121.20	0	0
27			Aero	.53		99.62	112.30	121.20	0	0
28			Base	1.80		189.25	100.00	100.00	0	0
29	47	Interstage 1-2			244.61	67.42	99.69	101.47	.032	.022
30		(Fwd)	Silo							
31			Aero							
32			Base	3.10		64.06	112.35	115.53	0	0
33			Silo	4.21		66.61	100.32	100.55	.001	0
34		Jettisoned	Aero	7.56		66.87	100.10	100.17	.001	.001
35		Portion	Base	5.40		67.09	100.27	100.76	.001	0
36			Jett	199.84		68.93	98.82	100.89	.028	.018
37	47	Interstage 1-2			129.94	96.61	100.76	99.76	.024	.014
38		(Aft)	Silo	3.37		96.69	100.34	100.59	.001	0
39			Aero	3.41		97.71	101.98	103.41	.001	0
40	48	1st Stage Engine			63.94	224.88	110.18	117.28	.004	.115
41			Silo	2.89		190.41	111.84	120.45	0	.004
42			Aero	1.04		136.60	117.20	129.70	0	.001
43			Base	4.80		309.40	100.00	100.00	0	0
44	49	Skirt			290.67	68.46	100.69	101.15	.064	.039
45			Silo	17.57		68.02	100.35	100.60	.004	.002
46			Aero	3.33		67.80	100.64	101.12	.001	0
47			Base	40.60		69.10	101.70	102.76	.009	.006
48		MISSILE			963.49					
49			Silo	32.20						
50			Aero	21.25						
51			Base	58.71						
52			Jett	286.02						

* Boeing Section Stations (See Missile Station Diagram)

2-5550-0-58

3.12 MISSILE NO. 686
WEIGHT AND BALANCE SUMMARY
MAJOR COMPONENTS S/N 0000206

REPORT NO. _____
DATE _____

LINE	SEC.	DESCRIPTION	DATA	EXPENDED WEIGHT (LB)	TOTAL WEIGHT (LB)	CENTER OF GRAVITY LONG.*	CENTER OF GRAVITY LAT.	CENTER OF GRAVITY VERT.	INERTIA SLUG FT2x10-3 ROLL	INERTIA SLUG FT2x10-3 PITCH
1	41	RV Spacer								
2			Silo							
3			Aero							
4	39	CTLI Section								
5			Silo							
6			Aero							
7	42	G&C Section			1.02	80.94	100.00	100.00	0	0
8			Silo							
9			Aero							
10	44	3rd Stage Engine			18.57	97.27	106.54	111.51	0	.003
11			Silo	.43		94.95	110.30	117.70	0	0
12			Aero	.80		94.95	110.30	117.70	0	0
13			Base	.20		131.00	100.00	100.00	0	0
14	45	Interstage 2-3			119.54	59.90	100.34	101.49	.010	.006
15		(Fwd)	Silo							
16			Aero							
17			Base	2.81		57.33	107.51	108.65	0	0
18			Silo	1.92		61.11	101.01	101.74	0	0
19		Jettisoned	Aero	3.40		61.59	100.27	100.47	0	0
20		Portion	Base							
21			Jett	86.90		61.87	99.23	100.65	.008	.005
22	45	Interstage 2-3			63.64	80.64	99.30	101.39	.006	.003
23		(Aft)	Silo	1.18		80.97	100.50	100.84	0	0
24			Aero	1.18		82.00	103.07	105.23	0	0
25	46	2nd Stage Engine			32.60	145.76	105.88	110.22	.001	.018
26			Silo	.63		99.62	112.30	121.20	0	0
27			Aero	.53		99.62	112.30	121.20	0	0
28			Base	1.80		189.25	100.00	100.00	0	0
29	42	Interstage 1-2			241.92	67.57	99.47	101.77	.032	.022
30		(Fwd)	Silo							
31			Aero							
32			Base	3.10		64.06	112.35	115.53	0	0
33			Silo	4.21		66.61	100.32	100.55	.001	0
34		Jettisoned	Aero	7.56		66.87	100.10	100.17	.001	.001
35		Portion	Base	5.40		67.09	100.27	100.76	.001	0
36			Jett	197.15		69.13	98.54	101.25	.028	.018
37	47	Interstage 1-2			128.38	96.61	100.76	99.76	.024	.014
38		(Aft)	Silo	3.37		96.69	100.34	100.59	.001	0
39			Aero	3.41		97.71	101.98	103.41	.001	0
40	48	1st Stage Engine			63.35	224.01	110.28	117.44	.004	.115
41			Silo	2.89		190.41	111.84	120.45	0	.004
42			Aero	1.04		136.60	117.20	129.70	0	.001
43			Base	4.80		309.40	100.00	100.00	0	0
44	49	Skirt			287.97	68.45	100.66	101.10	.064	.039
45			Silo	17.57		68.02	100.35	100.60	.004	.002
46			Aero	3.33		67.80	100.64	101.12	.001	0
47			Base	40.60		69.10	101.70	102.76	.009	.006
48		MISSILE			956.99					
49			Silo	32.20						
50			Aero	21.25						
51			Base	58.71						
52			Jett	284.05						

* Boeing Section Stations (See Missile Station Diagram)

2-5550-0-58

3.13 MISSILE NO. 687
WEIGHT AND BALANCE SUMMARY
MAJOR COMPONENTS S/N 0000231

REPORT NO. _____
DATE _____

LINE	SEC.	DESCRIPTION	DATA	EXPENDED WEIGHT (LB)	TOTAL WEIGHT (LB)	CENTER OF GRAVITY LONG.*	LAT.	VERT.	INERTIA SLUG FT2x10-3 ROLL	PITCH
1	41	RV Spacer								
2			Silo							
3			Aero							
4	39	CTLI Section								
5			Silo							
6			Aero							
7	42	G&C Section			1.02	80.94	100.00	100.00	0	0
8			Silo							
9			Aero							
10	44	3rd Stage Engine			18.65	97.43	106.52	111.46	0	.003
11			Silo	.43		94.95	110.30	117.70	0	0
12			Aero	.80		94.95	110.30	117.70	0	0
13			Base	.20		131.00	100.00	100.00	0	0
14	45	Interstage 2-3			119.48	59.85	100.24	101.46	.010	.006
15		(Fwd)	Silo							
16			Aero							
17			Base	2.81		57.33	107.51	108.65	0	0
18			Silo	1.92		61.11	101.01	101.74	0	0
19		Jettisoned	Aero	3.40		61.59	100.27	100.47	0	0
20		Portion	Base							
21			Jett	86.84		61.80	99.10	100.61	.008	.005
22	45	Interstage 2-3			63.60	80.64	99.30	101.39	.006	.003
23		(Aft)	Silo	1.18		80.97	100.50	100.84	0	0
24			Aero	1.18		82.00	103.07	105.23	0	0
25	46	2nd Stage Engine			32.47	145.57	105.90	110.26	.001	.018
26			Silo	.63		99.62	112.30	121.20	0	0
27			Aero	.53		99.62	112.30	121.20	0	0
28			Base	1.80		189.25	100.00	100.00	0	0
29	47	Interstage 1-2			245.59	67.50	99.63	101.54	.032	.022
30		(Fwd)	Silo							
31			Aero							
32			Base	3.10		64.06	112.35	115.53	0	0
33			Silo	4.21		66.61	100.32	100.55	.001	0
34		Jettisoned	Aero	7.56		66.87	100.10	100.17	.001	.001
35		Portion	Base	5.40		67.09	100.27	100.76	.001	0
36			Jett	200.82		69.03	98.75	100.98	.028	.018
37	47	Interstage 1-2			130.51	96.61	100.76	99.76	.024	.014
38		(Aft)	Silo	3.37		96.69	100.34	100.59	.001	0
39			Aero	3.41		97.71	101.98	103.41	.001	0
40	48	1st Stage Engine			63.54	224.29	110.24	117.38	.004	.115
41			Silo	2.89		190.41	111.84	120.45	0	.004
42			Aero	1.04		136.60	117.20	129.70	0	.001
43			Base	4.80		309.40	100.00	100.00	0	0
44	49	Skirt			287.62	68.36	100.87	101.02	.064	.039
45			Silo	17.57		68.02	100.35	100.60	.004	.002
46			Aero	3.33		67.80	100.64	101.12	.001	0
47			Base	40.60		69.10	101.70	102.76	.009	.006
48		MISSILE			962.48					
49			Silo	32.20						
50			Aero	21.25						
51			Base	58.71						
52			Jett	287.66						

* Boeing Section Stations (See Missile Station Diagram)

3.1.4 WEIGHT AND BALANCE SUMMARY
MEAN WEIGHT COMPONENTS**
(APPLICABLE TO ALL MISSILES)

REPORT NO. _____
DATE _____

LINE	SEC.	DESCRIPTION	DATA	EXPENDED WEIGHT (LB)	TOTAL WEIGHT (LB)	CENTER OF GRAVITY LONG.*	CENTER OF GRAVITY LAT.	CENTER OF GRAVITY VERT.	INERTIA SLUG FT2x10-3 ROLL	INERTIA SLUG FT2x10-3 PITCH
1	41	RV Spacer								
2			Silo							
3			Aero							
4	39	CTLI Section								
5			Silo							
6			Aero							
7	42	G&C Section			1.02	80.94	100.00	100.00		
8			Silo							
9			Aero							
10	44	3rd Stage Engine			12.71	80.65	109.56	116.82		
11			Silo							
12			Aero							
13			Base							
14	45	Interstage 2-3			18.57	59.49	105.24	107.52		
15		(Fwd)	Silo							
16			Aero							
17			Base							
18			Silo							
19		Jettisoned	Aero							
20		Portion	Base							
21			Jett	7.68		61.44	100.06	103.80		
22	45	Interstage 2-3			7.61	80.79	98.29	96.54		
23		(Aft)	Silo							
24			Aero							
25	46	2nd Stage Engine			16.89	102.11	111.34	119.73		
26			Silo							
27			Aero							
28			Base							
29	47	Interstage 1-2			22.14	66.13	105.62	111.67		
30		(Fwd)	Silo							
31			Aero							
32			Base							
33			Silo							
34		Jettisoned	Aero							
35		Portion	Base							
36			Jett	9.35		68.33	96.79	109.60		
37	47	Interstage 1-2			8.56	91.01	100.68	97.51		
38		(Aft)	Silo							
39			Aero							
40	48	1st Stage Engine			38.09	161.19	117.09	129.00		
41			Silo							
42			Aero							
43			Base							
44	49	Skirt			14.47	62.87	106.84	110.70		
45			Silo							
46			Aero							
47			Base							
48		MISSILE			140.06					
49			Silo							
50			Aero							
51			Base							
52			Jett							

* Boeing Section Stations (See Missile Diagram)

2-5550-0-58

** See page 23 for details of these items.

CHECK LIST NO.	4.0	SUMMARY MISSILE WEIGHING CHECK LIST	RECORD OF CHECKING (DATE)						
			Mo						
DATE	MODEL WS-133A	FINAL ASSEMBLY DRAWING NO. 21-5050-4	Day						
			Yr						

SECTION A11 MISSILE NO. 653-687

MISSILE COMPONENT _____ COMPONENT PART NO. _____

ITEM NUMBER	DESCRIPTION	PART NO.	WEIGHT	X ARM	Y ARM	Z ARM	COMPONENT: BASIC WEIGHT	COMPONENT: AS WEIGHED	COMPONENT:	COMPONENT: REMOTE SITE SHIPMENT	COMPONENT: AS RECEIVED REMOTE SITE	MISSILE: AS WEIGHED REMOTE SITE	MISSILE: LAUNCH
	SUMMARY CHECK LISTS FOR SECTIONS 42 THROUGH 49 ARE IDENTICAL TO THOSE FOUND IN D2-13946-3 PAGES 20 THROUGH 26.												

2-5550-0-21

5.0 ENGINEERING CHANGE PROPOSAL (ECP) INCORPORATION APPLICABLE TO WING II MISSILES 653-687

The following ECP's have not been incorporated into "Model Specification, Guided Missile Main Assemblage (S-133-1000-0-1)" dated 25 October 1962. However, the mass properties of these ECP's have been incorporated into this report unless otherwise noted. ECP's applicable to the CTLI components will be found in D2-13943-2, "Flight Article Mass Properties for CTLI Installations".

ECP NO. (WS-133A-BO-)	ECP TITLE	STAGE	WEIGHT CHANGE	WEIGHT CHANGE INCORPORATED IN THIS REPORT
369	Revision to Incorporate Blast Tubes in Second Stage Wing II Engines	2	-	Yes
540	Potting and Bonding Deletion for Vandenberg Air Force Base Missiles, Phase II	1,2,3	-	No*

* ECP 540 postpones the potting of certain components on scheduled CTLI missiles until final installation at Vandenberg Air Force Base. Since the potting is considered part of the operational weight, its mass properties are still included in this report even though it will be applied at VAFB.

2-5550-0-78

SERIAL NUMBER: 0000199 6.1.1 ACTUAL WEIGHT RECORD - INTERSTAGE 2-3

U/O MISSILE 655	DRAWING NO. 25-36103-1	CHECK LIST NO. 5	REPORT NO. OPR-2066
MISSILE MODEL WS-133	DCN New	REPORTED BY HC-JH	PAGE NO.
CONFIGURATION TAH	ADCN 6	CHECKED BY GVR	DATE 3/11/63

(FIGURE I)

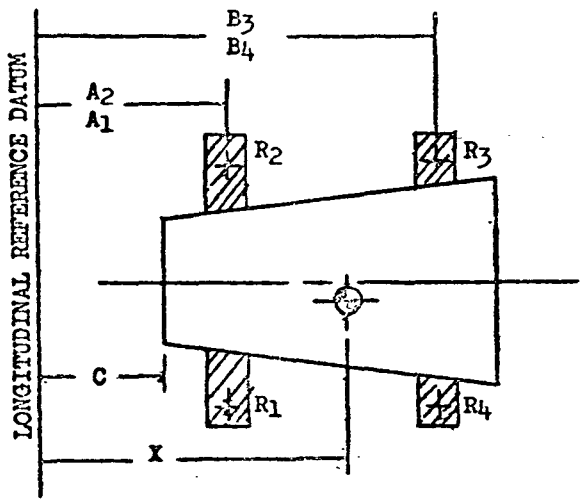

(FIGURE II)

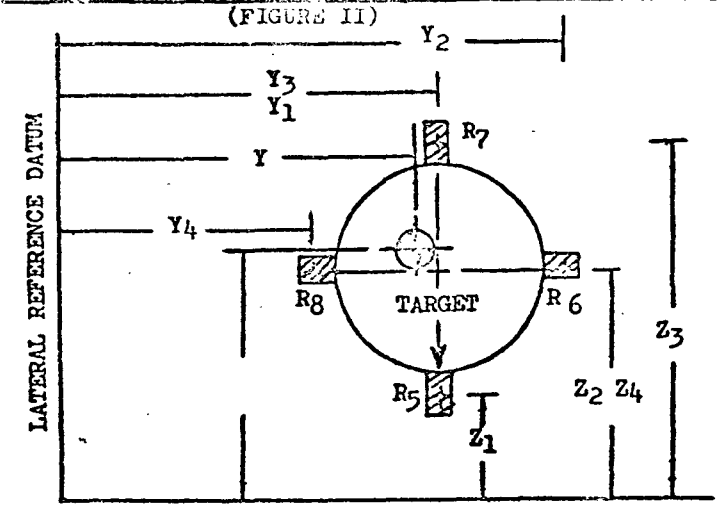

WEIGHING DATA

REACTION	GR. WT.	TARE	CORR.	NET WT.	REACTION	GR. WT.	TARE	CORR.	NET WT.
R1	84.55	41.00		43.55	R5	95.40	40.80		54.60
R2	132.20	94.85		37.35	R6	47.00	23.90		23.10
R3	78.10	40.50		37.60	R7	100.75	40.65		60.10
R4	134.00	95.00		39.00	R8	40.80	21.10		19.70
TOTAL	428.85	271.35		157.50	TOTAL	283.95	126.45		157.50

DIMENSIONAL DATA

DIM.	INCHES	DIM.	INCHES	DIM.	INCHES
A1	47.343	Z1	100.000	Y1	72.500
A2	47.354	Z2	72.501	Y2	100.000
B3	88.351	Z3	100.000	Y3	127.493
B4	88.351	Z4	127.499	Y4	100.000
C	50.000				

LONGITUDINAL C.G.

REACTION	NET WT.	ARM	MOMENT
R1	43.55	47.343	
R2	37.35	47.354	
R3	37.60	88.351	
R4	39.00	88.351	
AS WGD	157.50	67.29	10,598.1

LATERAL C.G.

REACTION	NET WT	ARM	MOMENT
R5	54.60	100.000	
R6	23.10	72.501	
R7	60.10	100.000	
R8	19.70	127.499	
AS WGD	157.50	99.41	15,656.5

VERTICAL C.G.

REACTION	NET WT.	ARM	MOMENT
R5	54.60	72.500	
R6	23.10	100.000	
R7	60.10	127.498	
R8	19.70	100.000	
AS WGD	157.50	100.96	15,901.1

Fig "A" Number: 6501 Serial Number: 0000199

RECORD OF CHECKING (DATE)							
Mo		3					
Day		11					
Yr		63					

CHECK LIST NO. 5

DATE 3/11/63

6.1.1 MISSILE WEIGHING CHECK LIST

MODEL WS-133 FINAL ASSEMBLY DRAWING NO. 21-50150

SECTION 45 MISSILE NO. 655

MISSILE COMPONENT BODY SECTION GUIDED MISSILE COMPONENT PART NO. Noted

ITEM NUMBER	DESCRIPTION	PART NO.	WEIGHT	X ARM	Y ARM	Z ARM	COMPONENT BASIC WEIGHT	COMPONENT AS WEIGHED		REMOTE SITE SHIPMENT	AS RECEIVED REMOTE SITE	REV. OF USED ON ADCN	REV. OF USED ON DCN
	BODY SECTION ASSY	25-36103-1					-	-					
	Interstage Assy- Structural	25-36102-1					x	x					
	Cork Insulation Installation	25-37084-1					x	x					
	Instr Rack & Accelerometer	25-31659-4					x	x					
	Marking Instl- Section 45	25-30134-28					x	x					
	Cover- Insulating	29-24652-2					x	x					
	Cover- Insulating	29-25598-1					x	x					
	Cover- Insulating (8)	29-23365-1					x	x					
	Cover- Insulating (8)	29-23365-2					x	x					
	Cover- Insulating (7)	29-23365-3					x	x					
	Cover- Insulating (4)	29-23365-4					x	x					
	Cover- Insulating	29-23365-5					x	x					
	Cover- Insulating (4)	29-23365-6					x	x					
	Seal- Forward (2)	29-23674-1					x	x					
	Door- Access, Ordnance (3)	29-22673-3					x	x					
	Closure Panel- Access, Ordnance	29-22672-2					x	x					
	Door- Access, Ignitor Stage II	29-22361-4					x	x					
	Closure Panel- Access, Booster Skirt	29-22081-5					x	x					
	Door- Access, Detonator	26-11878-1					x	x					
	Door- Access, Ignitor Stage III	26-11885-4					x	x					
	Door- Access, CTLI	26-12909-1					x	x					
	Plug- Screw, Insulated (2)	26-15247-2					x	x					
	Sleeve	26-14713-1					x	x					
	Bolt - 100° Head (6)	BACB30EM-3-3					x	x					
	Bolt - 100° Head (4)	-3-4					x	x					
	Bolt - 100° Head (14)	-4-6					x	x					
	Bolt - 100° Head (8)	-4-7					x	x					
	Bolt - 100° Head (41)	-4-10					x	x					
	Bolt - 100° Head (3)	-5-3					x	x					
	Bolt - 100° Head (6)	-4-4					x	x					

SERIAL NUMBER: 0000199 6.1.1 ACTUAL WEIGHT RECORD - INTERSTAGE 2-3

U/O MISSILE 655	DRAWING NO. 25-36103-1	CHECK LIST NO. 5	REPORT NO. OPR-2066
MISSILE MODEL WS-133	DCN New	REPORTED BY HC-JH	PAGE NO.
CONFIGURATION TAH	ADCN 6	CHECKED BY GVR	DATE 3/11/63

(FIGURE I)

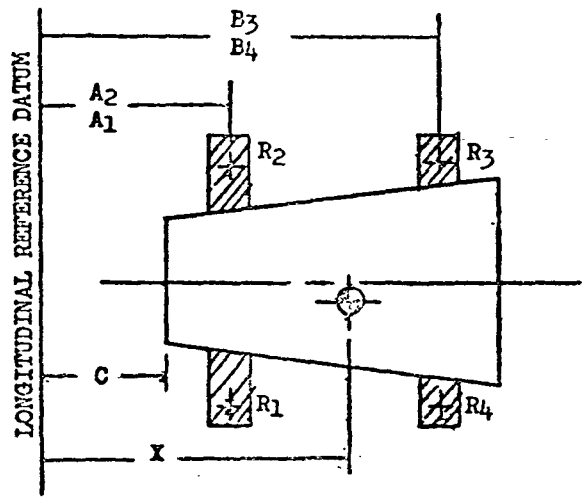

(FIGURE II)

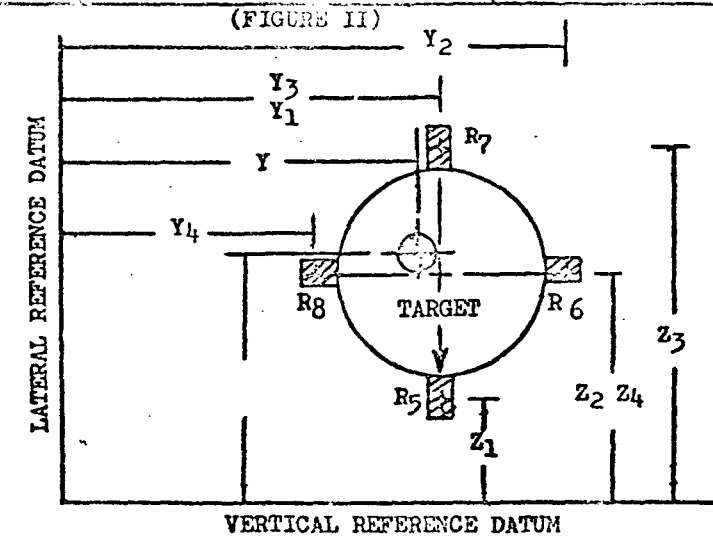

WEIGHING DATA

REACTION	GR. WT.	TARE	CORR.	NET WT.	REACTION	GR. WT.	TARE	CORR.	NET WT.
R1	84.55	41.00		43.55	R5	95.40	40.80		54.60
R2	132.20	94.85		37.35	R6	47.00	23.90		23.10
R3	78.10	40.50		37.60	R7	100.75	40.65		60.10
R4	134.00	95.00		39.00	R8	40.80	21.10		19.70
TOTAL	428.85	271.35		157.50	TOTAL	283.95	126.45		157.50

DIMENSIONAL DATA

DIM.	INCHES	DIM.	INCHES	DIM.	INCHES
A1	47.343	Z1	100.000	Y1	72.500
A2	47.354	Z2	72.501	Y2	100.000
B3	88.351	Z3	100.000	Y3	127.493
B4	88.351	Z4	127.499	Y4	100.000
C	50.000				

LONGITUDINAL C.G.

REACTION	NET WT.	ARM	MOMENT
R1	43.55	47.343	
R2	37.35	47.354	
R3	37.60	88.351	
R4	39.00	88.351	
AS WGD	157.50	67.29	10,598.1

LATERAL C.G.

REACTION	NET WT	ARM	MOMENT
R5	54.60	100.000	
R6	23.10	72.501	
R7	60.10	100.000	
R8	19.70	127.499	
AS WGD	157.50	99.41	15,656.5

VERTICAL C.G.

REACTION	NET WT.	ARM	MOMENT
R5	54.60	72.500	
R6	23.10	100.000	
R7	60.10	127.498	
R8	19.70	100.000	
AS WGD	157.50	100.96	15,901.1

Fig. "A" Number: 6501 Serial Number: 0000199

CHECK LIST NO. 5

DATE 3-11-63

6.1.1 MISSILE WEIGHING CHECK LIST

MODEL WS-133 FINAL ASSEMBLY DRAWING NO. 21-50150

SECTION 45 MISSILE NO. 655

MISSILE COMPONENT BODY SECTION GUIDED MISSILE COMPONENT PART NO. Noted

RECORD OF CHECKING (DATE)						
Mo		3				
Day		11				
Yr		63				

ITEM NUMBER	DESCRIPTION	PART NO.	WEIGHT	X ARM	Y ARM	Z ARM	COMPONENT: BASIC WEIGHT	COMPONENT: AS WEIGHED	COMPONENT: ,	COMPONENT: REMOTE SITE SHIPMENT	COMPONENT: AS RECEIVED REMOTE SITE	MISSILE: AS WEIGHED REMOTE SITE	MISSILE: LAUNCH
	BODY SECTION ASSY (CONTINUED)						-	-					
	Bolt - 100° Head (3)	BAOB30EM-4-5					x	x					
	Bolt - 100° Head (2)	-4-12					x	x					
	Insulation	EMS-5-62					x	x					

WEIGHT AND BALANCE CHANGE RECORD

ASSOCIATE CONTRACTOR	BOEING	CONTRACT NO.	AF04(694)-046	REPORT NO.	OPR-2066
COMPONENT	INTERSTAGE 2-3	LOT NO.	-	DATE	3/12/63
MODEL NO.	WS-133	DRAWING NO.	25-36103-1	PREPARED	H. CHRISTIANSEN
SERIAL NO.	0000199	U.O. MISSILE	655	APPROVED	G. ROBERTS

LINE	EQUIPMENT CHANGE RECORD		WEIGHT AND BALANCE						
			WEIGHT	X AXIS		Y AXIS		Z AXIS	
	PART NO.	DESCRIPTION OF EQUIPMENT		ARM	MOMENT	ARM	MOMENT	ARM	MOMENT
1									
2	25-36103-1	Body Section (As Weighed)	157.50	67.29	10,598.1	99.41	15,656.5	100.96	15,901.1
3									
4									
5		ADD:	0						
6									
7									
8		DEDUCT:	0						
9									
10									
11	25-36103-1	Body Section (Complete)	157.50	67.29	10,598.1	99.41	15,656.5	100.96	15,901.1
12									
13									
14									
15									
16									
17									
18									
19									
20									
21									
22									
23									
24									
25									
26									
27									
28									
29									
30									
31									
32									

WEIGHT AND BALANCE CHANGE RECORD

ASSOCIATE CONTRACTOR	BOEING	CONTRACT NO.	AF04(694)-046	REPORT NO.	OPR-2067
COMPONENT	INTERSTAGE 2-3	LOT NO.		DATE	3/12/63
MODEL NO.	WS-133	DRAWING NO.	25-36103-1	PREPARED	H. CHRISTIANSEN
SERIAL NO.	0000200	U.O. MISSILE	660	APPROVED	G. ROBERTS

LINE	EQUIPMENT CHANGE RECORD		WEIGHT AND BALANCE						
			WEIGHT	X AXIS		Y AXIS		Z AXIS	
	PART NO.	DESCRIPTION OF EQUIPMENT		ARM	MOMENT	ARM	MOMENT	ARM	MOMENT
1									
2	25-36103-1	Body Section (As Weighed)	157.30	67.37	10,596.9	99.36	15,629.6	101.00	15,888.0
3									
4									
5		ADD:	0						
6									
7									
8		DEDUCT:	0						
9									
10									
11	25-36103-1	Body Section (Complete)	157.30	67.37	10,596.9	99.36	15,629.6	101.00	15,888.0
12									
13									
14									
15									
16									
17									
18									
19									
20									
21									
22									
23									
24									
25									
26									
27									
28									
29									
30									
31									
32									

WEIGHT AND BALANCE CHANGE RECORD

ASSOCIATE CONTRACTOR	BOEING	CONTRACT NO.	Af04(694)-046	REPORT NO.	OPR-2269
COMPONENT	INTERSTAGE 2-3	LOT NO.		DATE	3/12/63
MODEL NO.	WS-133	DRAWING NO.	25-36103-1	PREPARED	H. CHRISTIANSEN
SERIAL NO.	0000201	U.O. MISSILE	667	APPROVED	G. ROBERTS

LINE	EQUIPMENT CHANGE RECORD		WEIGHT AND BALANCE						
			WEIGHT	X AXIS		Y AXIS		Z AXIS	
	PART NO.	DESCRIPTION OF EQUIPMENT		ARM	MOMENT	ARM	MOMENT	ARM	MOMENT
1									
2	25-36103-1	Body Section (As Weighed)	157.45	67.41	10,614.3	99.46	15,659.9	100.95	15,894.8
3									
4									
5		ADD:	0						
6									
7									
8		DEDUCT:	0						
9									
10									
11	25-36103-1	Body Section (Complete)	157.45	67.41	10,614.3	99.46	15,659.9	100.95	15,894.8
12									
13									
14									
15									
16									
17									
18									
19									
20									
21									
22									
23									
24									
25									
26									
27									
28									
29									
30									
31									
32									

WEIGHT AND BALANCE CHANGE RECORD

ASSOCIATE CONTRACTOR	BOEING	CONTRACT NO.	AF04(694)-046	REPORT NO.	OPR-2070
COMPONENT	INTERSTAGE 2-3	LOT NO.		DATE	3/18/63
MODEL NO.	WS-133	DRAWING NO.	25-36103-1	PREPARED	H. CHRISTIANSEN
SERIAL NO.	0000202	U.O. MISSILE	669	APPROVED	G. ROBERTS

LINE	EQUIPMENT CHANGE RECORD		WEIGHT AND BALANCE						
			WEIGHT	X AXIS		Y AXIS		Z AXIS	
	PART NO.	DESCRIPTION OF EQUIPMENT		ARM	MOMENT	ARM	MOMENT	ARM	MOMENT
1									
2	25-36103-1	Body Section (As Weighed)	157.05	67.27	10,564.6	99.37	15,606.0	100.92	15,849.3
3									
4									
5		ADD:	0						
6									
7									
8		DEDUCT:	0						
9									
10									
11	25-36103-1	Body Section (Complete)	157.05	67.27	10,564.6	99.37	15,606.0	100.92	15,849.3
12									
13									
14									
15									
16									
17									
18									
19									
20									
21									
22									
23									
24									
25									
26									
27									
28									
29									
30									
31									
32									

WEIGHT AND BALANCE CHANGE RECORD

ASSOCIATE CONTRACTOR	BOEING	CONTRACT NO.	AF04(694)-046	REPORT NO.	OPR-2071
COMPONENT	INTERSTAGE 2-3	LOT NO.		DATE	3/18/63
MODEL NO.	WS-133	DRAWING NO.	25-36103-1	PREPARED	H. CHRISTIANSEN
SERIAL NO.	0000203	U.O. MISSILE	674	APPROVED	G. ROBERTS

LINE	EQUIPMENT CHANGE RECORD		WEIGHT AND BALANCE						
			WEIGHT	X AXIS		Y AXIS		Z AXIS	
	PART NO.	DESCRIPTION OF EQUIPMENT		ARM	MOMENT	ARM	MOMENT	ARM	MOMENT
1									
2	25-36103-1	Body Section (As Weighed)	156.50	67.40	10,548.8	99.35	15,548.3	100.98	15,803.9
3									
4									
5		ADD:	0						
6									
7									
8		DEDUCT:	0						
9									
10									
11	25-36103-1	Body Section (Complete)	156.50	67.40	10,548.8	99.35	15,548.3	100.98	15,803.9
12									
13									
14									
15									
16									
17									
18									
19									
20									
21									
22									
23									
24									
25									
26									
27									
28									
29									
30									
31									
32									

WEIGHT AND BALANCE CHANGE RECORD

ASSOCIATE CONTRACTOR	BOEING	CONTRACT NO.	AF04(694)-046	REPORT NO.	OPR-2072
COMPONENT	INTERSTAGE 2-3	LOT NO.		DATE	3/15/63
MODEL NO.	WS-133	DRAWING NO.	25-36103-1	PREPARED	R. ST. ROMAIN
SERIAL NO.	0000204	U.O. MISSILE	676	APPROVED	G. ROBERTS

LINE	EQUIPMENT CHANGE RECORD		WEIGHT AND BALANCE						
			WEIGHT	X AXIS		Y AXIS		Z AXIS	
	PART NO.	DESCRIPTION OF EQUIPMENT		ARM	MOMENT	ARM	MOMENT	ARM	MOMENT
1									
2	25-36103-1	Body Section (As Weighed)	156.60	67.40	10,555.5	99.38	15,562.4	100.94	15,807.0
3									
4									
5		ADD:	0						
6									
7									
8		DEDUCT:	0						
9									
10									
11	25-36103-1	Body Section (Complete)	156.60	67.40	10,555.5	99.38	15,562.4	100.94	15,807.0
12									
13									
14									
15									
16									
17									
18									
19									
20									
21									
22									
23									
24									
25									
26									
27									
28									
29									
30									
31									
32									

WEIGHT AND BALANCE CHANGE RECORD

ASSOCIATE CONTRACTOR	BOEING	CONTRACT NO.	AF04(694)-046	REPORT NO.	OPR-2074
COMPONENT	INTERSTAGE 2-3	LOT NO.		DATE	3/26/63
MODEL NO.	WS-133	DRAWING NO.	25-36103-1	PREPARED	H. CHRISTIANSEN
SERIAL NO.	0000205	U.O. MISSILE	681	APPROVED	G. ROBERTS

LINE	EQUIPMENT CHANGE RECORD		WEIGHT AND BALANCE						
			WEIGHT	X AXIS		Y AXIS		Z AXIS	
	PART NO.	DESCRIPTION OF EQUIPMENT		ARM	MOMENT	ARM	MOMENT	ARM	MOMENT
1									
2	25-36103-1	Body Section (As Weighed)	156.20	67.29	10,509.9	99.38	15,522.4	100.98	15,772.6
3									
4									
5		ADD:	0						
6									
7									
8		DEDUCT:	0						
9									
10									
11	25-36103-1	Body Section (Complete)	156.20	67.29	10,509.9	99.38	15,522.4	100.98	15,772.6
12									
13									
14									
15									
16									
17									
18									
19									
20									
21									
22									
23									
24									
25									
26									
27									
28									
29									
30									
31									
32									

2-5550-0-11 R1

WEIGHT AND BALANCE CHANGE RECORD

ASSOCIATE CONTRACTOR	BOEING	CONTRACT NO.	AF04(694)-046	REPORT NO.	OPR-2076
COMPONENT	INTERSTAGE 2-3	LOT NO.		DATE	3/22/63
MODEL NO.	WS-133	DRAWING NO.	25-36103-1	PREPARED	R. ST. ROMAIN
SERIAL NO.	0000206	U.O. MISSILE	686	APPROVED	G. ROBERTS

LINE	EQUIPMENT CHANGE RECORD		WEIGHT AND BALANCE						
			WEIGHT	X AXIS		Y AXIS		Z AXIS	
	PART NO.	DESCRIPTION OF EQUIPMENT		ARM	MOMENT	ARM	MOMENT	ARM	MOMENT
1									
2	25-36103-1	Body Section (As Weighed)	157.00	67.35	10,574.4	99.44	15,622.0	100.98	15,863.9
3									
4									
5		ADD:	0						
6									
7									
8		DEDUCT:	0						
9									
10									
11	25-36103-1	Body Section (Complete)	157.00	67.35	10,574.4	99.44	15,622.0	100.98	15,863.9
12									
13									
14									
15									
16									
17									
18									
19									
20									
21									
22									
23									
24									
25									
26									
27									
28									
29									
30									
31									
32									

WEIGHT AND BALANCE CHANGE RECORD

ASSOCIATE CONTRACTOR	BOEING	CONTRACT NO.	AF04(694)-046	REPORT NO.	OPR-2073
COMPONENT	INTERSTAGE 2-3	LOT NO.		DATE	3/20/63
MODEL NO.	WS-133	DRAWING NO.	25-36103-1	PREPARED	R. ST. ROMAIN
SERIAL NO.	0000211	U.O. MISSILE	679	APPROVED	G. ROBERTS

LINE	EQUIPMENT CHANGE RECORD		WEIGHT AND BALANCE						
			WEIGHT	X AXIS		Y AXIS		Z AXIS	
	PART NO.	DESCRIPTION OF EQUIPMENT		ARM	MOMENT	ARM	MOMENT	ARM	MOMENT
1									
2	25-36103-1	Body Section (As Weighed)	156.15	67.37	10,519.9	99.32	15,509.1	101.06	15,779.9
3									
4									
5		ADD:	0						
6									
7									
8		DEDUCT:	0						
9									
10									
11	25-36103-1	Body Section (Complete)	156.15	67.37	10,519.9	99.32	15,509.1	101.06	15,779.9
12									
13									
14									
15									
16									
17									
18									
19									
20									
21									
22									
23									
24									
25									
26									
27									
28									
29									
30									
31									
32									

2-5550-0-11 R1

WEIGHT AND BALANCE CHANGE RECORD

ASSOCIATE CONTRACTOR	BOEING	CONTRACT NO.	AF04(694)-046	REPORT NO.	OPR-2075
COMPONENT	INTERSTAGE 2-3	LOT NO.		DATE	3/21/63
MODEL NO.	WS-133	DRAWING NO.	25-36103-1	PREPARED	R. ST. ROMAIN
SERIAL NO.	0000212	U.O. MISSILE	683	APPROVED	G. ROBERTS

LINE	EQUIPMENT CHANGE RECORD		WEIGHT AND BALANCE						
			WEIGHT	X AXIS		Y AXIS		Z AXIS	
	PART NO.	DESCRIPTION OF EQUIPMENT		ARM	MOMENT	ARM	MOMENT	ARM	MOMENT
1									
2	25-36103-1	Body Section (As Weighed)	155.80	67.17	10,464.3	99.38	15,483.8	100.76	15,698.2
3									
4									
5		ADD:	0						
6									
7									
8		DEDUCT:	0						
9									
10									
11	25-36103-1	Body Section (Complete)	155.80	67.17	10,464.3	99.38	15,483.8	100.76	15,698.2
12									
13									
14									
15									
16									
17									
18									
19									
20									
21									
22									
23									
24									
25									
26									
27									
28									
29									
30									
31									
32									

WEIGHT AND BALANCE CHANGE RECORD

ASSOCIATE CONTRACTOR	BOEING	CONTRACT NO.	AF04(694)-046	REPORT NO.	OPR-2077
COMPONENT	INTERSTAGE 2-3	LOT NO.		DATE	3/27/63
MODEL NO.	WS-133	DRAWING NO.	25-36103-1	PREPARED	R. ST. ROMAIN
SERIAL NO.	0000231	U.O. MISSILE	687	APPROVED	G. ROBERTS

LINE	EQUIPMENT CHANGE RECORD		WEIGHT AND BALANCE						
			WEIGHT	X AXIS		Y AXIS		Z AXIS	
	PART NO.	DESCRIPTION OF EQUIPMENT		ARM	MOMENT	ARM	MOMENT	ARM	MOMENT
1									
2	25-36103-1	Body Section (As Weighed)	156.90	67.31	10,561.6	99.36	15,589.6	100.95	15,839.8
3									
4									
5		ADD:	0						
6									
7									
8		DEDUCT:	0						
9									
10									
11	25-36103-1	Body Section (Complete)	156.90	67.31	10,561.6	99.36	15,589.6	100.95	15,839.8
12									
13									
14									
15									
16									
17									
18									
19									
20									
21									
22									
23									
24									
25									
26									
27									
28									
29									
30									
31									
32									

WEIGHT AND BALANCE CHANGE RECORD

ASSOCIATE CONTRACTOR	BOEING	CONTRACT NO.	AF04(694)-046	REPORT NO.	OPR-2065
COMPONENT	INTERSTAGE 2-3	LOT NO.		DATE	2/28/63
MODEL NO.	WS-133	DRAWING NO.	25-36103-1	PREPARED	W. BAIRD
SERIAL NO.	0000915	U.O. MISSILE	653	APPROVED	G. ROBERTS

LINE	EQUIPMENT CHANGE RECORD		WEIGHT AND BALANCE						
			WEIGHT	X AXIS		Y AXIS		Z AXIS	
	PART NO.	DESCRIPTION OF EQUIPMENT		ARM	MOMENT	ARM	MOMENT	ARM	MOMENT
1									
2	25-36103-1	Body Section (As Weighed)	156.85	67.41	10,573.6	99.32	15,577.8	100.97	15,837.5
3									
4									
5		ADD:	0						
6									
7									
8		DEDUCT:	0						
9									
10									
11	25-36103-1	Body Section (Complete)	156.85	67.41	10,573.6	99.32	15,577.8	100.97	15,837.5
12									
13									
14									
15									
16									
17									
18									
19									
20									
21									
22									
23									
24		.....							
25									
26									
27									
28									
29									
30									
31									
32									

2-5550-0-11 R1

WEIGHT AND BALANCE CHANGE RECORD

ASSOCIATE CONTRACTOR	BOEING	CONTRACT NO.	AF04(694)-046	REPORT NO.	OPR-2068
COMPONENT	INTERSTAGE 2-3	LOT NO.		DATE	3/26/63
MODEL NO.	WS-133	DRAWING NO.	25-36103-1	PREPARED	H. CHRISTIANSEN
SERIAL NO.	0000917	U.O. MISSILE	Sp. 020 (662)	APPROVED	G. ROBERTS

LINE	EQUIPMENT CHANGE RECORD		WEIGHT AND BALANCE						
			WEIGHT	X AXIS		Y AXIS		Z AXIS	
	PART NO.	DESCRIPTION OF EQUIPMENT		ARM	MOMENT	ARM	MOMENT	ARM	MOMENT
1									
2	25-36103-1	Body Section (As Weighed)	156.55	67.36	10,545.0	99.34	15,551.9	100.97	15,806.1
3									
4									
5		ADD:	0						
6									
7									
8		DEDUCT:	0						
9									
10									
11	25-36103-1	Body Section (Complete)	156.55	67.36	10,545.0	99.34	15,551.9	100.97	15,806.1
12									
13									
14									
15									
16									
17									
18									
19									
20									
21									
22									
23									
24									
25									
26									
27									
28									
29									
30									
31									
32									

2-5550-0-77

SERIAL NUMBER: 0000199 | 6.2.1 ACTUAL WEIGHT RECORD - INTERSTAGE 1-2

U/O MISSILE 655	DRAWING NO. 25-36101-1	CHECK LIST NO. 7	REPORT NO. OPR-
MISSILE MODEL WS-133	DCN C	REPORTED BY RS	PAGE NO.
CONFIGURATION TAH	ADCN 14	CHECKED BY GVR	DATE 3-15-63

(FIGURE I)

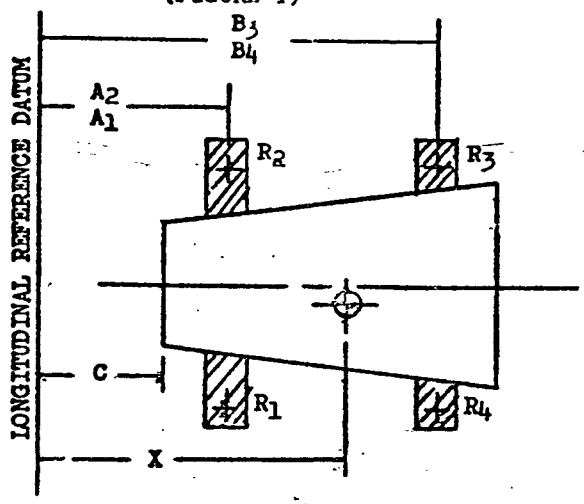

(FIGURE II)

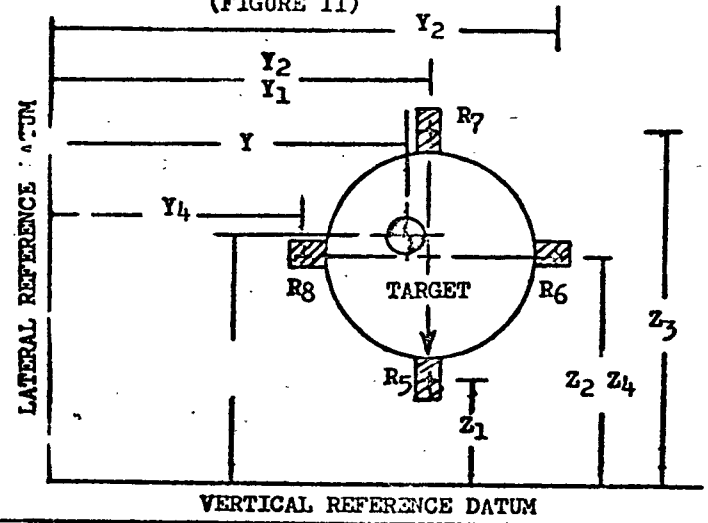

WEIGHING DATA

REACTION	GR. WT.	TARE	CORR.	NET WT.	REACTION	GR. WT.	TARE	CORR.	NET WT.
R1	223.85	127.80		96.05	R5	69.85	8.95		60.90
R2	179.00	97.90		81.10	R6	166.75	55.75		111.00
R3	198.45	110.90		87.55	R7	72.50	8.70		63.80
R4	159.35	82.10		77.25	R8	159.30	53.05		106.25
TOTAL	760.65	418.70		341.95	TOTAL	468.40	126.45		341.95

DIMENSIONAL DATA

DIM.	INCHES	DIM.	INCHES	DIM.	INCHES
A1	49.072	Z1	100.000	Y1	72.500
A2	49.070	Z2	72.501	Y2	100.000
B3	109.070	Z3	100.000	Y3	127.493
B4	109.070	Z4	127.499	Y4	100.000
C	50.000				

LONGITUDINAL C.G.

REACTION	NET WT.	ARM	MOMENT
R1	96.05	49.072	
R2	81.10	49.070	
R3	87.55	109.070	
R4	77.25	109.070	
AS WGD	341.95	77.99	26,667.7

LATERAL C.G.

REACTION	NET WT.	ARM	MOMENT
R5	60.90	100.000	
R6	111.00	72.501	
R7	63.80	100.000	
R8	106.25	127.499	
AS WGD	341.95	99.62	34,064.4

VERTICAL C.G.

REACTION	NET WT	ARM	MOMENT
R5	60.90	72.500	
R6	111.00	100.000	
R7	63.80	127.493	
R8	106.25	100.000	
AS WGD	341.95	100.23	34,274.6

Fig. "A" Number: 6701 Serial Number: 0000199

CHECK LIST NO. 7

DATE 3-15-63

6.2.1 MISSILE WEIGHING CHECK LIST

MODEL WS-133 FINAL ASSEMBLY DRAWING NO. 21-50150

RECORD OF CHECKING (DATE)							
Mo		3					
Day		15					
Yr		63					

SECTION 47 MISSILE NO. 655

MISSILE COMPONENT BODY SECTION GUIDED MISSILE COMPONENT PART NO. Noted

ITEM NUMBER	DESCRIPTION	PART NO.	WEIGHT	X ARM	Y ARM	Z ARM	COMPONENT: BASIC WEIGHT	COMPONENT: AS WEIGHED		COMPONENT: REMOTE SITE SHIPMENT	COMPONENT: AS RECEIVED REMOTE SITE	MISSILE: AS WEIGHED REMOTE SITE	MISSILE: LAUNCH
	BODY SECTION ASSY	25-36101-1					-	-					
	Interstage Assy-Structural	25-36100-1					x	x					
	Shield-Assy of, Insulated	25-36101-2					x	x					
	Shield-Time Delay, Booster	25-29544-1					x	x					
	Cork Insulation Instl-Exterior	25-37131-1					x	x					
	Plug-Access Hole	29-23663-1					x	x					
	Seal-Fwd Adapter Ring (2)	29-24180-1					x	x					
	Door-Access Stage Separation	26-11886-1					x	x					
	Door-Access, Booster	26-11888-1					x	x					
	Door Assy - Safe & Arm	29-20567-4					x	x					
	Closure Panel Ord. Access (117°)	29-28371-1					x	x					
	Door-Ordnance Access (4)	29-28391-1					x	x					
	Cover Panel Tie (4)	29-23654-1					x	x					
	Cover Panel Tie (4)	29-23654-2					x	x					
	Panel-Insulation	29-25565-1					x	x					
	Panel-Insulation	25-36383-1					x	x					
	Marking Instl	25-30134-29					x	x					
	Cover Receptacle	29-22725-1					x	x					
	Bolt - 100° Head	BACB30EM-3-8					x	x					
	Bolt - 100° Head (33)	-4-11					x	x					
	Bolt - 100° Head	-4-9					x	x					
	Bolt - 100° Head (6)	-4-5					x	x					
	Bolt - 100° Head (3)	-3-4					x	x					
	Bolt - 100° Head (4)	-3-3					x	x					
	Bolt - 100° Head (4)	-4-10					x	x					
	Bolt - 100° Head	-4-19					x	x					
	Bolt - 100° Head	-4-20					x	x					
	Bolt - 100° Head	-4L-9					x	x					
	Bolt - 100° Head	-4L-16					x	x					
	Bolt - 100° Head	-4-4					x	x					

Fig. "A" Number: 6701 Serial Number: 0000199

CHECK LIST NO. 7

DATE 3-15-63

6.2.1 MISSILE WEIGHING CHECK LIST

MODEL WS-133 FINAL ASSEMBLY DRAWING NO. 21-50150

RECORD OF CHECKING (DATE)							
Mo		3					
Day		15					
Yr		63					

SECTION 47 MISSILE NO. 655

MISSILE COMPONENT BODY SECTION GUIDED MISSILE COMPONENT PART NO. Noted

ITEM NUMBER	DESCRIPTION	PART NO.	WEIGHT	X ARM	Y ARM	Z ARM	COMPONENT BASIC WEIGHT	COMPONENT AS WEIGHED		MISSILE REMOTE SITE SHIPMENT	MISSILE AS RECEIVED REMOTE SITE	MISSILE AS WEIGHED REMOTE SITE	MISSILE LAUNCH
	BODY SECTION ASSY (CONTINUED)						-	-					
	Bolt - 100° Head (14)	BACB30EM-4-6					x	x					
	Bolt - 100° Head (16)	BACB30EM-P4-4					x	x					
	Washer (22)	AN960-416L					x	x					
	Nut (6)	NAS679-A4W					x	x					
	Insulation	EMS 5-62					x	x					

2-5550-0-21

BOEING NO. D2-13946-4 PAGE 43

2-5550-0-11 R1

WEIGHT AND BALANCE CHANGE RECORD

ASSOCIATE CONTRACTOR	BOEING	CONTRACT NO.	AF04(694)-046	REPORT NO.	OPR-2066
COMPONENT	INTERSTAGE 1-2	LOT NO.		DATE	3/15/63
MODEL NO.	WS-133	DRAWING NO.	25-36101-1	PREPARED	R. ST. ROMAIN
SERIAL NO.	0000199	U.O. MISSILE	655	APPROVED	G. ROBERTS

LINE	EQUIPMENT CHANGE RECORD		WEIGHT AND BALANCE						
			WEIGHT	X AXIS		Y AXIS		Z AXIS	
	PART NO.	DESCRIPTION OF EQUIPMENT		ARM	MOMENT	ARM	MOMENT	ARM	MOMENT
1									
2	25-36101-1	Body Section (As Weighed)	341.95	77.99	26,667.7	99.62	34,064.4	100.23	34,274.6
3									
4									
5		ADD:	0						
6									
7									
8		DEDUCT:	0						
9									
10									
11	25-36101-1	Body Section (Complete)	341.95	77.99	26,667.7	99.62	34,064.4	100.23	34,274.6
12									
13									
14									
15									
16									
17									
18									
19									
20									
21									
22									
23									
24									
25									
26									
27									
28									
29									
30									
31									
32									

BOEING NO. D2-13946-4

2-5550-0-11 R1

WEIGHT AND BALANCE CHANGE RECORD

ASSOCIATE CONTRACTOR	BOEING	CONTRACT NO.	AF04(694)-046	REPORT NO.	OPR-2067
COMPONENT	INTERSTAGE 1-2	LOT NO.		DATE	3/15/63
MODEL NO.	WS-133	DRAWING NO.	25-36101-1	PREPARED	T. VOGEL
SERIAL NO.	0000200	U.O. MISSILE	660	APPROVED	G. ROBERTS

LINE	EQUIPMENT CHANGE RECORD		WEIGHT AND BALANCE						
			WEIGHT	X AXIS		Y AXIS		Z AXIS	
	PART NO.	DESCRIPTION OF EQUIPMENT		ARM	MOMENT	ARM	MOMENT	ARM	MOMENT
1									
2	25-36101-1	Body Section (As Weighed)	343.20	78.07	26,795.0	99.55	34,164.6	100.23	34,398.3
3									
4									
5		ADD:	0						
6									
7									
8		DEDUCT:	0						
9									
10									
11	25-36101-1	Body Section (Complete)	343.20	78.07	26,795.0	99.55	34,164.6	100.23	34,398.3
12									
13									
14									
15									
16									
17									
18									
19									
20									
21									
22									
23									
24									
25									
26									
27									
28									
29									
30									
31									
32									

BOEING NO. D2-13946-4

WEIGHT AND BALANCE CHANGE RECORD

ASSOCIATE CONTRACTOR	BOEING	CONTRACT NO.	AF04(694)-046	REPORT NO.	OPR-2069
COMPONENT	INTERSTAGE 1-2	LOT NO.		DATE	3/18/63
MODEL NO.	WS-133	DRAWING NO.	25-36101-1	PREPARED	H. CHRISTIANSEN
SERIAL NO.	0000201	U.O. MISSILE	667	APPROVED	G. ROBERTS

LINE	EQUIPMENT CHANGE RECORD		WEIGHT AND BALANCE						
			WEIGHT	X AXIS		Y AXIS		Z AXIS	
	PART NO.	DESCRIPTION OF EQUIPMENT		ARM	MOMENT	ARM	MOMENT	ARM	MOMENT
1									
2	25-36101-1	Body Section (As Weighed)	339.65	78.06	26,512.8	99.77	33,888.0	100.32	34,073.3
3									
4									
5		ADD:	0						
6									
7									
8		DEDUCT:	0						
9									
10									
11	25-36101-1	Body Section (Complete)	339.65	78.06	26,512.8	99.77	33,888.0	100.32	34,073.3
12									
13									
14									
15									
16									
17									
18									
19									
20									
21									
22									
23									
24									
25									
26									
27									
28									
29									
30									
31									
32									

WEIGHT AND BALANCE CHANGE RECORD

ASSOCIATE CONTRACTOR	BOEING	CONTRACT NO.	AF04(694)-046	REPORT NO.	OPR-2070
COMPONENT	INTERSTAGE 1-2	LOT NO.		DATE	3/21/63
MODEL NO.	WS-133	DRAWING NO.	25-36101-1	PREPARED	R. ST. ROMAIN
SERIAL NO.	0000202	U.O. MISSILE	669	APPROVED	G. ROBERTS

LINE	EQUIPMENT CHANGE RECORD		WEIGHT AND BALANCE						
			WEIGHT	X AXIS		Y AXIS		Z AXIS	
	PART NO.	DESCRIPTION OF EQUIPMENT		ARM	MOMENT	ARM	MOMENT	ARM	MOMENT
1									
2	25-36101-1	Body Section (As Weighed)	342.90	78.18	26,807.2	99.60	34,153.9	100.20	34,360.0
3									
4									
5		ADD:	0						
6									
7									
8		DEDUCT:	0						
9									
10									
11	25-36101-1	Body Section (Complete)	342.90	78.18	26,807.2	99.60	34,153.9	100.20	34,360.0
12									
13									
14									
15									
16									
17									
18									
19									
20									
21									
22									
23									
24									
25									
26									
27									
28									
29									
30									
31									
32									

WEIGHT AND BALANCE CHANGE RECORD

ASSOCIATE CONTRACTOR	BOEING	CONTRACT NO.	AF04(694)-046	REPORT NO.	OPR-2071
COMPONENT	INTERSTAGE 1-2	LOT NO.		DATE	3/21/63
MODEL NO.	WS-133	DRAWING NO.	25-36101-1	PREPARED	T. VOGEL
SERIAL NO.	0000203	U.O. MISSILE	674	APPROVED	G. ROBERTS

LINE	EQUIPMENT CHANGE RECORD		WEIGHT AND BALANCE						
			WEIGHT	X AXIS		Y AXIS		Z AXIS	
	PART NO.	DESCRIPTION OF EQUIPMENT		ARM	MOMENT	ARM	MOMENT	ARM	MOMENT
1									
2	25-36101-1	Body Section (As Weighed)	342.05	77.90	26,645.5	99.60	34,067.5	100.28	34,299.7
3									
4									
5		ADD:	0						
6									
7									
8		DEDUCT:	0						
9									
10									
11	25-36101-1	Body Section (Complete)	342.05	77.90	26,645.5	99.60	34,067.5	100.28	34,299.7
12									
13									
14									
15									
16									
17									
18									
19									
20									
21									
22									
23									
24									
25									
26									
27									
28									
29									
30									
31									
32									

WEIGHT AND BALANCE CHANGE RECORD

ASSOCIATE CONTRACTOR	BOEING	CONTRACT NO.	AF04(694)-046	REPORT NO.	OPR-2072
COMPONENT	INTERSTAGE 1-2	LOT NO.		DATE	3/21/63
MODEL NO.	WS-133	DRAWING NO.	25-36101-1	PREPARED	H. CHRISTIANSEN
SERIAL NO.	0000204	U.O. MISSILE	676	APPROVED	G. ROBERTS

LINE	EQUIPMENT CHANGE RECORD		WEIGHT AND BALANCE						
			WEIGHT	X AXIS		Y AXIS		Z AXIS	
	PART NO.	DESCRIPTION OF EQUIPMENT		ARM	MOMENT	ARM	MOMENT	ARM	MOMENT
1									
2	25-36101-1	Body Section (As Weighed)	342.85	77.92	26,714.9	99.50	34,113.1	100.31	34,392.1
3									
4									
5		ADD:	0						
6									
7									
8		DEDUCT:	0						
9									
10									
11	25-36101-1	Body Section (Complete)	342.85	77.92	26,714.9	99.50	34,113.1	100.31	34,392.1
12									
13									
14									
15									
16									
17									
18									
19									
20									
21									
22									
23									
24									
25									
26									
27									
28									
29									
30									
31									
32									

WEIGHT AND BALANCE CHANGE RECORD

ASSOCIATE CONTRACTOR	BOEING	CONTRACT NO.	AF04(694)-046	REPORT NO.	OPR-2074
COMPONENT	INTERSTAGE 1-2	LOT NO.		DATE	3/26/63
MODEL NO.	WS-133	DRAWING NO.	25-36101-1	PREPARED	H. CHRISTIANSEN
SERIAL NO.	0000205	U.O. MISSILE	681	APPROVED	G. ROBERTS

LINE	EQUIPMENT CHANGE RECORD		WEIGHT AND BALANCE						
			WEIGHT	X AXIS		Y AXIS		Z AXIS	
	PART NO.	DESCRIPTION OF EQUIPMENT		ARM	MOMENT	ARM	MOMENT	ARM	MOMENT
1									
2	25-36101-1	Body Section (As Weighed)	343.95	78.07	26,852.8	99.59	34,254.8	100.26	34,484.2
3									
4									
5		ADD:	0						
6									
7									
8		DEDUCT:	0						
9									
10									
11	25-36101-1	Body Section (Complete)	343.95	78.07	26,852.8	99.59	34,254.8	100.26	34,484.2
12									
13									
14									
15									
16									
17									
18									
19									
20									
21									
22									
23									
24									
25									
26									
27									
28									
29									
30									
31									
32									

2-5550-0-11 R1

WEIGHT AND BALANCE CHANGE RECORD

ASSOCIATE CONTRACTOR	BOEING	CONTRACT NO.	AF04(694)-046	REPORT NO.	OPR-2076
COMPONENT	INTERSTAGE 1-2	LOT NO.		DATE	3/26/63
MODEL NO.	WS-133	DRAWING NO.	25-36101-1	PREPARED	R. ST. ROMAIN
SERIAL NO.	0000206	U.O. MISSILE	686	APPROVED	G. ROBERTS

LINE	EQUIPMENT CHANGE RECORD		WEIGHT AND BALANCE						
			WEIGHT	X AXIS		Y AXIS		Z AXIS	
	PART NO.	DESCRIPTION OF EQUIPMENT		ARM	MOMENT	ARM	MOMENT	ARM	MOMENT
1									
2	25-36101-1	Body Section (As Weighed)	339.60	78.05	26,504.3	99.53	33,799.1	100.47	34,120.7
3									
4									
5		ADD:	0						
6									
7									
8		DEDUCT:	0						
9									
10									
11	25-36101-1	Body Section (Complete)	339.60	78.05	26,504.3	99.53	33,799.1	100.47	34,120.7
12									
13									
14									
15									
16									
17									
18									
19									
20									
21									
22									
23									
24									
25									
26									
27									
28									
29									
30									
31									
32									

WEIGHT AND BALANCE CHANGE RECORD

ASSOCIATE CONTRACTOR	BOEING	CONTRACT NO.	AF04(694)-046	REPORT NO.	OPR-2073
COMPONENT	INTERSTAGE 1-2	LOT NO.		DATE	3/26/63
MODEL NO.	WS-133	DRAWING NO.	25-36101-1	PREPARED	H. CHRISTIANSEN
SERIAL NO.	0000211	U.O. MISSILE	679	APPROVED	G. ROBERTS

LINE	EQUIPMENT CHANGE RECORD		WEIGHT AND BALANCE						
			WEIGHT	X AXIS		Y AXIS		Z AXIS	
	PART NO.	DESCRIPTION OF EQUIPMENT		ARM	MOMENT	ARM	MOMENT	ARM	MOMENT
1									
2	25-36101-1	Body Section (As Weighed)	341.60	77.99	26,641.5	99.62	34,030.8	100.21	34,231.3
3									
4									
5		ADD:	0						
6									
7									
8		DEDUCT:	0						
9									
10									
11	25-36101-1	Body Section (Complete)	341.60	77.99	26,641.5	99.62	34,030.8	100.21	34,231.3
12									
13									
14									
15									
16									
17									
18									
19									
20									
21									
22									
23									
24									
25									
26									
27									
28									
29									
30									
31									
32									

WEIGHT AND BALANCE CHANGE RECORD

ASSOCIATE CONTRACTOR	BOEING	CONTRACT NO.	AF04(694)-046	REPORT NO.	OPR-2075
COMPONENT	INTERSTAGE 1-2	LOT NO.		DATE	3/26/63
MODEL NO.	WS-133	DRAWING NO.	25-36101-1	PREPARED	H. CHRISTIANSEN
SERIAL NO.	0000212	U.O. MISSILE	683	APPROVED	G. ROBERTS

LINE	EQUIPMENT CHANGE RECORD		WEIGHT AND BALANCE						
			WEIGHT	X AXIS		Y AXIS		Z AXIS	
	PART NO.	DESCRIPTION OF EQUIPMENT		ARM	MOMENT	ARM	MOMENT	ARM	MOMENT
1									
2	25-36101-1	Body Section (As Weighed)	343.85	77.95	26,802.9	99.69	34,302.8	100.26	34,497.8
3									
4									
5		ADD:	0						
6									
7									
8		DEDUCT:	0						
9									
10									
11	25-36101-1	Body Section (Complete)	343.85	77.95	26,802.9	99.69	34,302.8	100.26	34,497.8
12									
13									
14									
15									
16									
17									
18									
19									
20									
21									
22									
23									
24									
25									
26									
27									
28									
29									
30									
31									
32									

2-5550-0-11 R1

WEIGHT AND BALANCE CHANGE RECORD

ASSOCIATE CONTRACTOR	BOEING	CONTRACT NO.	AF04(694)-046	REPORT NO.	OPR-2077
COMPONENT	INTERSTAGE 1-2	LOT NO.		DATE	3/27/63
MODEL NO.	WS-133	DRAWING NO.	25-36101-1	PREPARED	R. ST. ROMAIN
SERIAL NO.	0000231	U.O. MISSILE	687	APPROVED	G. ROBERTS

LINE	EQUIPMENT CHANGE RECORD		WEIGHT AND BALANCE						
			WEIGHT	X AXIS		Y AXIS		Z AXIS	
	PART NO.	DESCRIPTION OF EQUIPMENT		ARM	MOMENT	ARM	MOMENT	ARM	MOMENT
1									
2	25-36101-1	Body Section (As Weighed)	345.40	78.01	26,945.0	99.65	34,417.6	100.32	34,651.2
3									
4									
5		ADD:	0						
6									
7									
8		DEDUCT:	0						
9									
10									
11	25-36101-1	Body Section (Complete)	345.40	78.01	26,945.0	99.65	34,417.6	100.32	34,651.2
12									
13									
14									
15									
16									
17									
18									
19									
20									
21									
22									
23									
24									
25									
26									
27									
28									
29									
30									
31									
32									

WEIGHT AND BALANCE CHANGE RECORD

ASSOCIATE CONTRACTOR	BOEING	CONTRACT NO.	AF 04(694)-046	REPORT NO.	OPR-2065
COMPONENT	INTERSTAGE 1-2	LOT NO.	WING II	DATE	4-8-63
MODEL NO.	WS-133	DRAWING NO.	25-36101-1	PREPARED	H. CHRISTIANSEN
SERIAL NO.	0000915	U.O. MISSILE	653	APPROVED	G. ROBERTS

LINE	EQUIPMENT CHANGE RECORD		WEIGHT AND BALANCE						
			WEIGHT	X AXIS		Y AXIS		Z AXIS	
	PART NO.	DESCRIPTION OF EQUIPMENT		ARM	MOMENT	ARM	MOMENT	ARM	MOMENT
1									
2	25-36101-1	Body Section (As Weighed)	340.60	77.96	26,553.4	99.63	33,933.5	100.31	34,167.1
3									
4									
5		ADD:	0						
6									
7									
8		DEDUCT:	0						
9									
10									
11	25-36101-1	Body Section (Complete)	340.60	77.96	26,553.4	99.63	33,933.5	100.31	34,167.1
12									
13									
14									
15									
16									
17									
18									
19									
20									
21									
22									
23									
24									
25									
26									
27									
28									
29									
30									
31									
32									

2-5550-0-11 R1

WEIGHT AND BALANCE CHANGE RECORD

ASSOCIATE CONTRACTOR	BOEING	CONTRACT NO.	AF04(694)-046	REPORT NO.	OPR-2068
COMPONENT	INTERSTAGE 1-2	LOT NO.		DATE	4/3/63
MODEL NO.	WS-133	DRAWING NO.	25-36101-1	PREPARED	H. CHRISTIANSEN
SERIAL NO.	0000917	U.O. MISSILE	662	APPROVED	G. ROBERTS

LINE	EQUIPMENT CHANGE RECORD		WEIGHT AND BALANCE						
			WEIGHT	X AXIS		Y AXIS		Z AXIS	
	PART NO.	DESCRIPTION OF EQUIPMENT		ARM	MOMENT	ARM	MOMENT	ARM	MOMENT
1									
2	25-36101-1	Body Section (As Weighed)	341.05	77.96	26,587.5	99.59	33,966.1	100.39	34,236.9
3									
4									
5		ADD:	0						
6									
7									
8		DEDUCT:	0						
9									
10									
11	25-36101-1	Body Section (Complete)	341.05	77.96	26,587.5	99.59	33,966.1	100.39	34,236.9
12									
13									
14									
15									
16									
17									
18									
19									
20									
21									
22									
23									
24									
25									
26									
27									
28									
29									
30									
31									
32									

S/N 0000198 6.3.1 ACTUAL WEIGHT RECORD - SKIRT

U/O MISSILE 653	DRAWING NO. 25-36080-1	CHECK LIST NO. 9	REPORT NO. OPR-
MISSILE MODEL WS-133	DCN c	REPORTED BY RS-TV	PAGE NO.
CONFIGURATION TAH	ADCN 9	CHECKED BY GVR	DATE 3-8-63

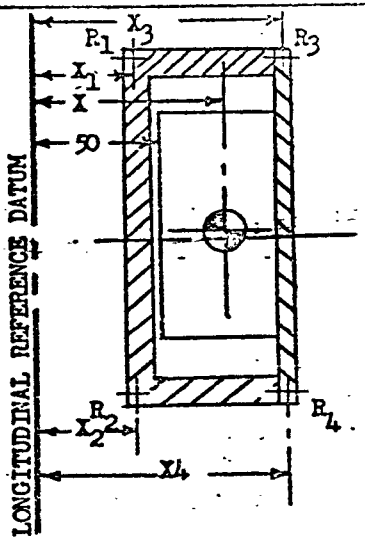

NOTE: Views taken from top.

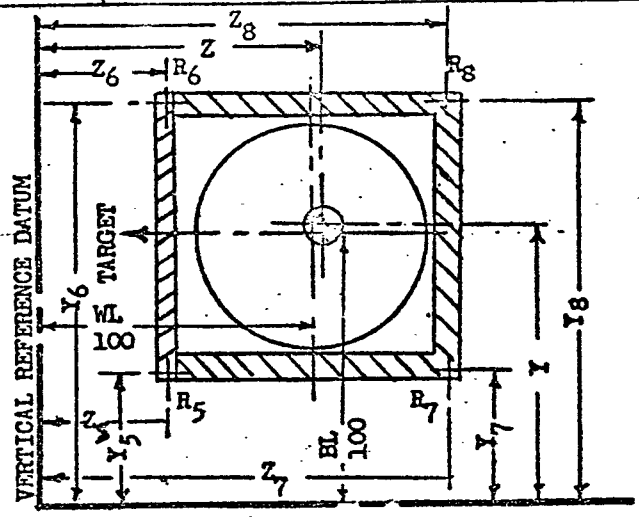

LATERAL REFERENCE DATUM

WEIGHING DATA

REACTION	GR. WT.	TARE	CORR.	NET WT.	X ARM	Y ARM	Z ARM
R1	140.10	64.10		76.00	52.353		
R2	87.65	8.45		79.20	52.354		
R3	160.45	96.55		63.90	89.854		
R4	207.80	151.10		56.70	89.854		
TOTAL	596.00	320.20		275.80			
R5	102.60	39.40		63.20		63.752	63.661
R6	218.85	146.60		72.25		136.253	63.698
R7	193.55	120.50		73.05		63.727	136.160
R8	81.00	13.70		67.30		136.229	136.198
MOMENT					18,961.7	27,696.9	27,738.2
TOTAL	596.00	320.20		275.80	68.75	100.42	100.57

DIMENSIONAL DATA

DIM	INCHES	DIM	INCHES	DIM	INCHES
X1	52.353	Y5	63.752	Z5	63.661
X2	52.354	Y7	63.727	Z6	63.698
X3	89.854	Y6	136.253	Z7	136.160
X4	89.854	Y8	136.229	Z8	136.198

REMARKS

2-12-3

FIG. "A" NUMBER: 6901 SERIAL NUMBER: 0000198

CHECK LIST NO. 9

DATE 3-8-63

6.3.1 MISSILE WEIGHING CHECK LIST

MODEL WS-133 FINAL ASSEMBLY DRAWING NO. 21-50150

RECORD OF CHECKING (DATE)							
Mo		3					
Day		8					
Yr		63					

SECTION 49 MISSILE NO. 653

MISSILE COMPONENT BODY SECTION GUIDED MISSILE COMPONENT PART NO. Noted

ITEM NUMBER	DESCRIPTION	PART NO.	WEIGHT	X ARM	Y ARM	Z ARM	COMPONENT: BASIC WEIGHT	COMPONENT: AS WEIGHED	COMPONENT:	COMPONENT: REMOTE SITE SHIPMENT	COMPONENT: AS RECEIVED REMOTE SITE	MISSILE: AS WEIGHED REMOTE SITE	MISSILE: LAUNCH
	BODY SECTION ASSY	25-36080-1					-	-					
	Skirt	25-36081-1					x	x					
	Screw	NAS514P832-8					x	x					
	Screw	NAS603-10					x	x					
	Suppt Brkt G&C & CTL Conn	25-37345-1					x	x					
	Bracket G&C Cable	29-28033-1					x	x					
	Bracket-Clamp G&C Cable	25-36624-1					x	x					
	Bracket Cable Suppt	29-28847-1					x	x					
	Bracket Cable Suppt	29-28847-2					x	x					
	Marking Installation	25-30134-30					x	x					
	Insulation	BMS 5-62					x	x					

2-5550-0-21

BOEING NO. D2-13946-4

WEIGHT AND BALANCE CHANGE RECORD

ASSOCIATE CONTRACTOR	BOEING	CONTRACT NO.	AF 04(694)-046	REPORT NO.	OPR-2065
COMPONENT	SKIRT	LOT NO.		DATE	3-8-63
MODEL NO.	WS-133	DRAWING NO.	25-36080-1	PREPARED	R. ST. ROMAIN
SERIAL NO.	0000198	U.O. MISSILE	653	APPROVED	G. ROBERTS

LINE	EQUIPMENT CHANGE RECORD		WEIGHT AND BALANCE						
			WEIGHT	X AXIS		Y AXIS		Z AXIS	
	PART NO.	DESCRIPTION OF EQUIPMENT		ARM	MOMENT	ARM	MOMENT	ARM	MOMENT
1									
2	25-36080-1	Body Section (As Weighed)	275.80	68.75	18,961.7	100.42	27,696.9	100.57	27,738.2
3									
4									
5		ADD:	0						
6									
7									
8		DEDUCT:	0						
9									
10									
11	25-36080-1	Body Section (Complete)	275.80	68.75	18,961.7	100.42	27,696.9	100.57	27,738.2
12									
13									
14									
15									
16									
17									
18									
19									
20									
21									
22									
23									
24									
25									
26									
27									
28									
29									
30									
31									
32									

2-5550-0-11 R1

WEIGHT AND BALANCE CHANGE RECORD

ASSOCIATE CONTRACTOR	BOEING	CONTRACT NO.	AF04(694)-046	REPORT NO.	OPR-2065
COMPONENT	SKIRT	LOT NO.		DATE	3/11/63
MODEL NO.	WS-133	DRAWING NO.	25-36080-1	PREPARED	R. ST. ROMAIN
SERIAL NO.	0000199	U.O. MISSILE	655	APPROVED	G. ROBERTS

LINE	EQUIPMENT CHANGE RECORD		WEIGHT AND BALANCE						
			WEIGHT	X AXIS		Y AXIS		Z AXIS	
	PART NO.	DESCRIPTION OF EQUIPMENT		ARM	MOMENT	ARM	MOMENT	ARM	MOMENT
1									
2	25-36080-1	Body Section (As Weighed)	275.50	68.77	18,946.0	100.48	27,681.4	100.50	27,686.5
3									
4									
5		ADD:	0						
6									
7									
8		DEDUCT:	0						
9									
10									
11	25-36080-1	Body Section (Complete)	275.50	68.77	18,946.0	100.48	27,681.4	100.50	27,686.5
12									
13									
14									
15									
16									
17									
18									
19									
20									
21									
22									
23									
24									
25									
26									
27									
28									
29									
30									
31									
32									

WEIGHT AND BALANCE CHANGE RECORD

ASSOCIATE CONTRACTOR	BOEING	CONTRACT NO.	AF04(694)-046	REPORT NO.	OPR-2067
COMPONENT	SKIRT	LOT NO.		DATE	3/12/63
MODEL NO.	WS-133	DRAWING NO.	25-36080-1	PREPARED	H. CHRISTIANSEN
SERIAL NO.	0000200	U.O. MISSILE	660	APPROVED	G. ROBERTS

LINE	EQUIPMENT CHANGE RECORD		WEIGHT AND BALANCE						
			WEIGHT	X AXIS		Y AXIS		Z AXIS	
	PART NO.	DESCRIPTION OF EQUIPMENT		ARM	MOMENT	ARM	MOMENT	ARM	MOMENT
1									
2	25-36080-1	Body Section (As Weighed)	276.65	68.78	19,024.9	100.65	27,845.3	100.47	27,796.0
3									
4									
5		ADD:	0						
6									
7									
8		DEDUCT:	0						
9									
10									
11	25-36080-1	Body Section (Complete)	276.65	68.78	19,024.9	100.65	27,845.3	100.47	27,796.0
12									
13									
14									
15									
16									
17									
18									
19									
20									
21									
22									
23									
24									
25									
26									
27									
28									
29									
30									
31									
32									

WEIGHT AND BALANCE CHANGE RECORD

ASSOCIATE CONTRACTOR	BOEING	CONTRACT NO.	AF04(694)-046	REPORT NO.	OPR-2068
COMPONENT	SKIRT	LOT NO.		DATE	3/18/63
MODEL NO.	WS-133	DRAWING NO.	25-36080-1	PREPARED	H. CHRISTIANSEN
SERIAL NO.	0000201	U.O. MISSILE	662	APPROVED	G. ROBERTS

LINE	EQUIPMENT CHANGE RECORD		WEIGHT AND BALANCE						
			WEIGHT	X AXIS		Y AXIS		Z AXIS	
	PART NO.	DESCRIPTION OF EQUIPMENT		ARM	MOMENT	ARM	MOMENT	ARM	MOMENT
1									
2	25-36080-1	Body Section (As Weighed)	270.65	68.69	18,590.8	100.25	27,133.0	100.66	27,243.4
3									
4									
5		ADD:	0						
6									
7									
8		DEDUCT:	0						
9									
10									
11	25-36080-1	Body Section (Complete)	270.65	68.69	18,590.8	100.25	27,133.0	100.66	27,243.4
12									
13									
14									
15									
16									
17									
18									
19									
20									
21									
22									
23									
24									
25									
26									
27									
28									
29									
30									
31									
32									

2-5550-0-11 R1

WEIGHT AND BALANCE CHANGE RECORD

ASSOCIATE CONTRACTOR	BOEING	CONTRACT NO.	AF04(694)-046	REPORT NO.	OPR-2069
COMPONENT	SKIRT	LOT NO.		DATE	3/18/63
MODEL NO.	WS-133	DRAWING NO.	25-36080-1	PREPARED	H. CHRISTIANSEN
SERIAL NO.	0000202	U.O. MISSILE	667	APPROVED	G. ROBERTS

LINE	EQUIPMENT CHANGE RECORD		WEIGHT AND BALANCE						
			WEIGHT	X AXIS		Y AXIS		Z AXIS	
	PART NO.	DESCRIPTION OF EQUIPMENT		ARM	MOMENT	ARM	MOMENT	ARM	MOMENT
1									
2	25-36080-1	Body Section (As Weighed)	276.10	68.50	18,911.5	100.48	27,741.4	100.55	27,760.9
3									
4									
5		ADD:	0						
6									
7									
8		DEDUCT:	0						
9									
10									
11	25-36080-1	Body Section (Complete)	276.10	68.50	18,911.5	100.48	27,741.4	100.55	27,760.9
12									
13									
14									
15									
16									
17									
18									
19									
20									
21									
22									
23									
24									
25									
26									
27									
28									
29									
30									
31									
32									

2-5550-0-11 R1

WEIGHT AND BALANCE CHANGE RECORD

ASSOCIATE CONTRACTOR	BOEING	CONTRACT NO.	AF04(694)-046	REPORT NO.	OPR-2070
COMPONENT	SKIRT	LOT NO.		DATE	3/13/63
MODEL NO.	MB-133	DRAWING NO.	25-36080-1	PREPARED	T. VOGEL
SERIAL NO.	0000203	U.O. MISSILE	669	APPROVED	G. ROBERTS

LINE	EQUIPMENT CHANGE RECORD		WEIGHT AND BALANCE						
			WEIGHT	X AXIS		Y AXIS		Z AXIS	
	PART NO.	DESCRIPTION OF EQUIPMENT		ARM	MOMENT	ARM	MOMENT	ARM	MOMENT
1									
2	25-36080-1	Body Section (As Weighed)	274.25	68.77	18,859.9	100.38	27,529.2	100.66	27,606.8
3									
4									
5		ADD:	0						
6									
7									
8		DEDUCT:	0						
9									
10									
11	25-36080-1	Body Section (Complete)	274.25	68.77	18,859.9	100.38	27,529.2	100.66	27,606.8
12									
13									
14									
15									
16									
17									
18									
19									
20									
21									
22									
23									
24									
25									
26									
27									
28									
29									
30									
31									
32									

BOEING

2-5550-0-11 R1

WEIGHT AND BALANCE CHANGE RECORD

ASSOCIATE CONTRACTOR	BOEING	CONTRACT NO.	AF04(694)-046	REPORT NO.	OPR-2072
COMPONENT	SKIRT	LOT NO.		DATE	3/18/63
MODEL NO.	MS-133	DRAWING NO.	25-36080-1	PREPARED	H. CHRISTIANSEN
SERIAL NO.	0000204	U.O. MISSILE	676	APPROVED	C. ROBERTS

LINE	EQUIPMENT CHANGE RECORD		WEIGHT AND BALANCE						
			WEIGHT	X AXIS		Y AXIS		Z AXIS	
	PART NO.	DESCRIPTION OF EQUIPMENT		ARM	MOMENT	ARM	MOMENT	ARM	MOMENT
1									
2	25-36080-1	Body Section (As Weighed)	276.85	68.87	19,067.3	100.42	27,800.1	100.66	27,866.7
3									
4									
5		ADD:	0						
6									
7									
8		DEDUCT:	0						
9									
10									
11	25-36080-1	Body Section (Complete)	276.85	68.87	19,067.3	100.42	27,800.1	100.66	27,866.7
12									
13									
14									
15									
16									
17									
18									
19									
20									
21									
22									
23									
24									
25									
26									
27									
28									
29									
30									
31									
32									

2-5550-0-11 R1

WEIGHT AND BALANCE CHANGE RECORD

ASSOCIATE CONTRACTOR	BOEING	CONTRACT NO.	AF04(694)-046	REPORT NO.	OPR-2074
COMPONENT	SKIRT	LOT NO.		DATE	3/25/63
MODEL NO.	MS-133	DRAWING NO.	25-36080-1	PREPARED	T. VOGEL
SERIAL NO.	0000205	U.O. MISSILE	681	APPROVED	G. ROBERTS

LINE	EQUIPMENT CHANGE RECORD		WEIGHT AND BALANCE						
			WEIGHT	X AXIS		Y AXIS		Z AXIS	
	PART NO.	DESCRIPTION OF EQUIPMENT		ARM	MOMENT	ARM	MOMENT	ARM	MOMENT
1									
2	25-36080-1	Body Section (As Weighed)	275.65	68.77	18,957.5	100.38	27,669.2	100.61	27,732.2
3									
4									
5		ADD:	0						
6									
7									
8		DEDUCT:	0						
9									
10									
11	25-36080-1	Body Section (Complete)	275.65	68.77	18,957.5	100.38	27,669.2	100.61	27,732.2
12									
13									
14									
15									
16									
17									
18									
19									
20									
21									
22									
23									
24									
25									
26									
27									
28									
29									
30									
31									
32									

2-5550-0-11 R1

WEIGHT AND BALANCE CHANGE RECORD

ASSOCIATE CONTRACTOR	BOEING	CONTRACT NO.	AF04(694)-046	REPORT NO.	OPR-2073
COMPONENT	SKIRT	LOT NO.		DATE	3/18/63
MODEL NO.	WS-133	DRAWING NO.	25-36080-1	PREPARED	H. CHRISTIANSEN
SERIAL NO.	0000211	U.O. MISSILE	679	APPROVED	G. ROBERTS

LINE	EQUIPMENT CHANGE RECORD		WEIGHT AND BALANCE						
			WEIGHT	X AXIS		Y AXIS		Z AXIS	
	PART NO.	DESCRIPTION OF EQUIPMENT		ARM	MOMENT	ARM	MOMENT	ARM	MOMENT
1									
2	25-36080-1	Body Section (As Weighed)	277.75	68.72	19,086.2	100.53	27,922.7	100.55	27,927.6
3									
4									
5		ADD:	0						
6									
7									
8		DEDUCT:	0						
9									
10									
11	25-36080-1	Body Section (Complete)	277.75	68.72	19,086.2	100.53	27,922.7	100.55	27,927.6
12									
13									
14									
15									
16									
17									
18									
19									
20									
21									
22									
23									
24									
25									
26									
27									
28									
29									
30									
31									
32									

2-5550-0-11 R1

WEIGHT AND BALANCE CHANGE RECORD

ASSOCIATE CONTRACTOR	BOEING	CONTRACT NO.	AF04(694)-0[illegible]	REPORT NO.	OPR-2075
COMPONENT	SKIRT	LOT NO.		DATE	3/25/63
MODEL NO.	WS-133	DRAWING NO.	25-36080-1	PREPARED	T. VOGEL
SERIAL NO.	0000212	U.O. MISSILE	683	APPROVED	G. ROBERTS

LINE	EQUIPMENT CHANGE RECORD		WEIGHT AND BALANCE						
			WEIGHT	X AXIS		Y AXIS		Z AXIS	
	PART NO.	DESCRIPTION OF EQUIPMENT		ARM	MOMENT	ARM	MOMENT	ARM	MOMENT
1									
2	25-36080-1	Body Section (As Weighed)	276.20	68.75	18,990.0	100.37	27,722.4	100.65	27,799.9
3									
4									
5		ADD:	0						
6									
7									
8		DEDUCT:	0						
9									
10									
11	25-36080-1	Body Section (Complete)	276.20	68.75	18,990.0	100.37	27,722.4	100.65	27,799.9
12									
13									
14									
15									
16									
17									
18									
19									
20									
21									
22									
23									
24									
25									
26									
27									
28									
29									
30									
31									
32									

2-5550-0-11 R1

WEIGHT AND BALANCE CHANGE RECORD

ASSOCIATE CONTRACTOR	BOEING	CONTRACT NO.	AF04(694)-046	REPORT NO.	OPR-2077
COMPONENT	SKIRT	LOT NO.		DATE	3/25/63
MODEL NO.	WS-133	DRAWING NO.	25-36080-1	PREPARED	T. VOGEL
SERIAL NO.	0000231	U.O. MISSILE	687	APPROVED	G. ROBERTS

LINE	EQUIPMENT CHANGE RECORD		WEIGHT AND BALANCE						
			WEIGHT	X AXIS		Y AXIS		Z AXIS	
	PART NO.	DESCRIPTION OF EQUIPMENT		ARM	MOMENT	ARM	MOMENT	ARM	MOMENT
1									
2	25-36080-1	Body Section (As Weighed)	273.15	68.65	18,751.7	100.55	27,466.4	100.51	27,453.5
3									
4									
5		ADD:	0						
6									
7									
8		DEDUCT:	0						
9									
10									
11	25-36080-1	Body Section (Complete)	273.15	68.65	18,751.7	100.55	27,466.4	100.51	27,453.5
12									
13									
14									
15									
16									
17									
18									
19									
20									
21									
22									
23									
24									
25									
26									
27									
28									
29									
30									
31									
32									

BOEING

NO. D2-13946-4 PAGE 70

2-5550-0-11 R1

WEIGHT AND BALANCE CHANGE RECORD

ASSOCIATE CONTRACTOR	BOEING	CONTRACT NO.	AF04(694)-046	REPORT NO.	OPR-2071
COMPONENT	SKIRT	LOT NO.		DATE	4/2/63
MODEL NO.	WS-133	DRAWING NO.	25-36080-1	PREPARED	H. CHRISTIANSEN
SERIAL NO.	0000919	U.O. MISSILE	GTM-020	APPROVED	G. ROBERTS

LINE	EQUIPMENT CHANGE RECORD		WEIGHT AND BALANCE						
	PART NO.	DESCRIPTION OF EQUIPMENT	WEIGHT	X AXIS		Y AXIS		Z AXIS	
				ARM	MOMENT	ARM	MOMENT	ARM	MOMENT
1									
2	25-36080-1	Body Section (As Weighed)	272.90	68.77	18,766.7	100.48	27,421.4	100.61	27,455.6
3									
4									
5		ADD:	0						
6									
7									
8		DEDUCT:	0						
9									
10									
11	25-36080-1	Body Section (Complete)	272.90	68.77	18,766.7	100.48	27,421.4	100.61	27,455.6
12									
13									
14									
15									
16									
17									
18									
19									
20									
21									
22									
23									
24									
25									
26									
27									
28									
29									
30									
31									
32									

6.4 BASE HEAT DEFLECTORS

Serial No.	25-37379-1	25-36378-1	25-36377-1
0000199	5.81 lb.	15.45 lb.	25.09
0000200	5.94	15.63	25.04
0000201	5.82	15.49	25.11
0000202	5.98	15.38	25.65
0000203	5.93	15.63	25.16
0000204	5.93	15.39	24.84
0000205	5.98	15.68	25.14
0000206	5.86	15.71	25.26
0000211	5.93	15.27	25.06
0000212	5.98	15.75	25.85
0000231	5.94	15.58	25.45
0000917	--	15.42	25.07
0000918	5.89	15.54	24.99
0000919	5.89	--	--