CATALOGED BY ASTIA
AS AD No. 403423

63-5-7

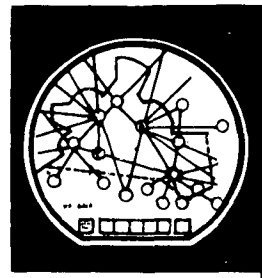

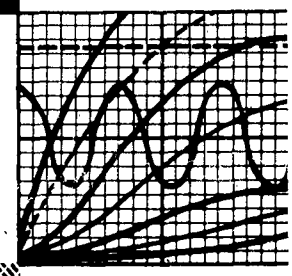

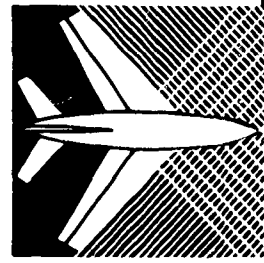

FINAL REPORT

Project No. 104-602T

Sub-Task 3

COMPUTER PROGRAMMING OF PHASE I MASTER PROGRAM (VOLUME I)

MAR 8 1963
TISIA

JUNE 1962

FEDERAL AVIATION AGENCY

Systems Research & Development Service

EXPERIMENTATION DIVISION

Atlantic City, New Jersey

FINAL REPORT

COMPUTER PROGRAMMING OF PHASE I MASTER PROGRAM

(VOLUME I)

PROJECT NO. 104-602T
Sub-Task 3
Work Detail C

Prepared by:

Don W. Vogel
Kenneth W. House
William Brown
Raymond J. Hilton
Robert B. Stein

June 1962

This report has been approved for general distribution.

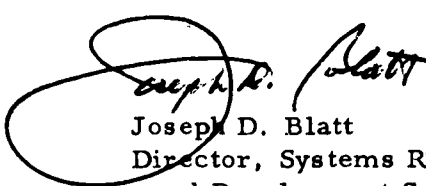

Joseph D. Blatt
Director, Systems Research
and Development Service
Federal Aviation Agency

Experimentation Division
National Aviation Facilities Experimental Center
Atlantic City, New Jersey

This report has been released to the U. S. Department of Commerce, Business and Defense Services Administration, Office of Technical Services, Washington 25, D. C. for reproduction and sale to the general public.

FINAL REPORT

COMPUTER PROGRAMMING OF PHASE I MASTER PROGRAM

VOLUME I

TEXT
AND
APPENDIX I

TABLE OF CONTENTS

	Page
ABSTRACT ..	ix
INTRODUCTION	1
PROGRAM LOGIC	1
INTERNAL PROGRAM	3
Computer-Built Tables	3
Tables of Constants	4
Processing Routines	5
EXTERNAL PROGRAM	10
Main Frame Plugboard	11
Input and Output Translate and Format Control Unit Plugboards	11
High-Speed Printer Plugboard	11
High-Speed Printer Paper Control Loop	12
OPERATING INSTRUCTIONS	15
SYNCHROTAPE PROGRAMMING AND OPERATION	15
Equipment and General Operating Description	16
Programming	20
Function Codes	25
Operator Instructions	29
Operator Error Correction	38
Loading Programs and Tables from Synchrotape	43
Loading Utility Programs from Synchrotape	43
PROGRAM AND COMPUTER COMPLEX OPERATION	44
Supervisory Messages	55
DETAILED NARRATIVES	67
Starting Routine (Appendix III)	67
Executive Routine (Appendix IV)	71

TABLE OF CONTENTS (Continued)

Page

Airway Routine (Appendix V) 90
Direct-Route Routine (Appendix VI) 95
Time Computation Routine (Appendix VII) 103
Tailoring Routine (Appendix VIII) 106
Printout Routine (Appendices IX and X) 108
Intercenter Message Routine (Appendix XI) 126
Departure/Modification Routine (Appendix XII) 127
Continuation Routine (Appendix XIII) 130
Cancellation and Erase Routine (Appendix XIV) 132
Readout Routine (Appendix XV) 133
Ending Routine (Appendix XVI) 135
Machine Error Routine (Appendix XVII) 138
Main Frame Plugboard (Appendix XVIII) 149
High-Speed Printer Plugboard (Appendix XIX) 171
Tables of Data 176
Computer Developed Tables 176
Constant Tables 185

CONCLUSIONS 197

RECOMMENDATIONS 198

ACKNOWLEDGMENTS 199

BIBLIOGRAPHY 200

APPENDIX I

Glossary (16 pages)

APPENDIX II

System Diagram and General Flow Charts (3 pages)

APPENDIX III

Starting Routine (4 pages)

APPENDIX IV

Executive Routine (22 pages)

TABLE OF CONTENTS (Continued)

APPENDIX V

Airway Routine (9 pages)

APPENDIX VI

Direct-Route Routine (15 pages)

APPENDIX VII

Time Computation Routine (3 pages)

APPENDIX VIII

Tailoring Routine (4 pages)

APPENDIX IX

High-Speed Printer Printout Routine (13 pages)

APPENDIX X

Typewriter Printout Routine (10 pages)

APPENDIX XI

Intercenter Message Routine (6 pages)

APPENDIX XII

Departure/Modification Routine (8 pages)

APPENDIX XIII

Continuation Routine (3 pages)

APPENDIX XIV

Cancellation Routine (3 pages)

TABLE OF CONTENTS (Continued)

APPENDIX XV

Readout Routine (4 pages)

APPENDIX XVI

Ending Routine (8 pages)

APPENDIX XVII

Machine Error Routine (10 pages)

APPENDIX XVIII

Main Frame Plugboard Wiring Charts (12 pages)

APPENDIX XIX

High-Speed Printer Plugboard Wiring Charts (9 pages)

APPENDIX XX

Input Translate and Format Control Unit Plugboard Narrative and Wiring Charts (62 pages)

APPENDIX XXI

Output Translate and Format Control Unit Plugboard Narrative and Wiring Charts (46 pages)

LIST OF ILLUSTRATIONS

Figure	Title	Page
1	UFC-1 Control Cabinets and Console	2
2	High-Speed Printer Paper Tape Loop	13
3	High-Speed Printer Paper Tape Loop Prepared for Master Operational Program	14
4	Synchrotape Typewriter	17
5	Synchrotape Console, Punch and Reader #2	18
6	Synchrotape Reader #1	19
7	Synchrotape Message Input Operation Sequence	21
8	Sample Format Tape for Master Program	22
9	Sample Format Tape for Loading Program and Tables	23
10	Sample Format Tape for Loading Utility Programs	24
11	Synchrotape Codes	26
12	Synchrotape Key to Univac Code Translation	45
13	Magnetic Tape Unit	46
14	Tab Settings for Strip Printout on Supervisor's Typewriter	50
15	High-Speed Printer Console	52
16	Supervisor's Console and Inquiry Typewriter	53

LIST OF ILLUSTRATIONS (Continued)

Figure	Title	Page
17	Supervisory Message - Input Message Received . . .	56
18	Supervisory Messages - Processing Completed . . .	58
19	Supervisory Messages - Operator Errors	58
20	Supervisory Messages - Machine Errors	61, 62
21	Supervisory Messages - Data Errors	64
22	Supervisory Messages - Program Errors	66
23	Miscellaneous Supervisory Messages	68
24	Supervisory Messages - CUE Errors	68
25	Ending Message	69
26	High-Speed Paper Tape System	72
27	Control Area in First Quadrant	96
28	Mathematical Factors and Their Development . . .	99
29	Derivation of Rotation Formulae	101
30	High-Speed Printer	109
31	Plugboard Start	150
32	Transfer Routine from Drum to Working Storage	151
33	Load Field Patterns	153
34	Compare for Positive Result	155
35	Compare for Negative Result	156
36	Compare for Equal Result	158

LIST OF ILLUSTRATIONS (Continued)

Figure	Title	Page
37	Transfer One Word of Data and Vary the Program	160
38	Shift and Transfer One Word of Data	160
39	Load General Storage Buffer and Vary the Program	162
40	Transfer One Block of Data and Vary the Program	162
41	Determine Message Kind	163
42	Square-Root Routine	164
43	Determine Flight Direction for Direct Route	166
44	Shift Aircraft Identification	168
45	Machine Error Recovery	169
46	Determine Message Kind for CUE	172
47	Table 1 - Flight Identification Table	177
48	Table 2 - Flight-Data Table	179
49	Table 7 - Fix-Data Table	181
50	Table 9 - Clock Readout Table	183
51	Table 14 - Continuation Table	184
52	Table 15 - Remarks Table	186
53	Table 16 - Continuation Message Index Table	186
54	Table 3 - Airway Table	187

LIST OF ILLUSTRATIONS (Continued)

Figure	Title	Page
55	Table 4 - Airway Fix Table	187
56	Table 5 - Major Outside Fix Table	189
57	Table 6 - Major Inside Fix Table	189
58	Table 8 - Airway-Junction Table	191
59	Table 12 - Clock Table	191
60	Table 13 - Jet-Type Table	192
61	Table 17 - Fix-Conversion Table	192
62	Table 18 - Theta-Rho Table	194
63	Table 19 - Latitude Reference Table	194
64	Table 20 - X Minimum/Maximum Table	195
65	Table 21 - Longitude Reference Table	195
66	Table 22 - Flight Direction Table	196
67	Table 23 - Relative Direction Table	196

Experimentation Division, Systems Research and Development Service, Federal Aviation Agency, Atlantic City, New Jersey.
COMPUTER PROGRAMMING OF THE PHASE I MASTER PROGRAM
by Harold R. Johnson, Jr., Don W. Vogel, Kenneth W. House, Robert B. Stein, William Brown and Raymond J. Hilton, June 1962, 3 Volumes, 508 pp. incl. 67 illus. and 21 Appendices, Final Report
(Project No. 104-602T)

ABSTRACT

The master program for Phase I flight data processing was developed to provide the maximum benefits for the Phase I systems. It permits the computer to accept and process six different kinds of messages, thus providing the system with the capability of processing semiautomatically any flight plan message received in the prescribed format. The resultant output of the program provides the Air Route Traffic Control Center with printed flight progress strips and the automatic transmission of flight plan estimates to other computer-equipped centers.

The outputs are time-controlled by the use of a real-time digital computer clock. The program is capable of handling airway routes and four types of direct routes, and will accept modification messages reflecting data or route changes. In addition, provisions are made for the integration of a controller update program to implement the controller updating equipment.

INTRODUCTION

The master program for Phase I flight data processing systems is designed to provide an Air Route Traffic Control Center, equipped with the Phase I computer system (Fig. 1), with an operational program constructed to meet the requirements of the Air Traffic Service. This program, with tables of information based on the user's geographical area, will provide the desired output for the automatic printing of flight progress strips and transmission of intercenter messages (ICM's) to similarly equipped facilities.

A general description of the program logic is provided, as well as a detailed narrative of each processing routine. The general description contains a brief resume of each routine and the associated tables of data, while the detailed narrative is written for use with the detailed flow charts contained in the appendices. Along with the detailed narrative are descriptions and illustrations of the tables of data.

The section dealing with operating instructions includes the functions of the output/input devices and descriptions of format tapes and message content. In addition, program operation, including start-of-day and end-of-day requirements, is provided.

It will be noted that frequent reference is made to controller updating equipment (CUE) in the detailed narratives and flow charts. This is due to the fact that the programming necessary to tie in the CUE Routines commenced prior to the completion of this document, and became an integral part of the existing program. Final documentation of the CUE program will be released at a later date.

PROGRAM LOGIC

The program logic for the Phase I Computer consists of two parts, the internal program and the external program. The internal program is made up of a series of processing routines and 25 tables of information. Due to the limited number of instructions which may be on the high-speed drum at any given time, the processing routines are retained in general storage until called out by the Executive Routine or by the routine sharing the high-speed drum with the Executive Routine. Supplemental to the internal program are the external (plugboard) programs. The computer plugboard instructions consist of common operations required by all internal routines, or special handling more readily programmed

FIG. 1 UFC-1 CONTROL CABINETS AND CONSOLE

externally. The translate and format-control plugboards and the printer plugboard are basically utilized to format data, permitting a considerable reduction in internal programming.

INTERNAL PROGRAM

The processing routines of the internal program are stored in general storage so as to permit consecutive readout of the instruction words of each routine as they are required. When two or more routines are required to operate simultaneously, the assigned storage areas are in sequence for ready access. In support of the program, tables of constants are developed and placed in general storage, and the starting address of each table becomes an integral part of the processing routines. Also, areas of storage are assigned to data tables built by the computer program in flight plan processing.

Computer-Built Tables

One of the major operations of the computer program is the construction of tables of information pertaining to each flight plan that enters the system. These tables are used by the program to provide the desired outputs, which are the flight progress strip for each geographical fix along the aircraft's route of flight and the intercenter message to an adjacent center's computer. For speed of operation, it is desirable that all tables constructed for a given flight be related by direct storage of addresses within a table or by modifying a table address to obtain the general storage address of the associated table.

The Flight Identification Table, consisting of the aircraft identification and departure point, is the key table for each flight. A modification of the address of this table provides the Flight-Data Table Address. The Flight-Data Table contains the route of flight, type of aircraft, altitude, speed and addresses of two associated tables. One of these is the Remarks Table, which will be constructed if the flight plan contains a remarks section. The second address is either the starting Fix-Data Table or the Continuation Table, when the route of flight is long enough to require a continuation message. In the case of the latter, the Continuation Table contains the balance of the route of flight and the starting Fix-Data Table address.

The Fix-Data Table contains the information necessary for the preparation of a flight progress strip for a given geographical location. This information consists of the fix identifier, fix time, previous fix time, distance between the two fixes, and the computer flight number, which is a modification of the Flight Identification Table address. In addition, the Fix-Data Table contains the address of the next Fix-Data Table and several codes used for processing special conditions.

The Clock Readout Table is developed to provide access to data stored for chronological processing. It consists of the general storage address of the data to be processed and the time at which the processing must occur. This table controls the predetermined time that the following functions are to be performed: (1) printing of flight progress strips, (2) transmitting intercenter messages, and (3) erasing of obsolete flight data information from computer files.

Since these tables are useful only as long as the flight for which they were constructed remains in the center's control area, the erase function becomes vital to an efficient operation. By erasing information that is no longer valid, the use of storage space is kept to a minimum.

Tables of Constants

The tables of constants can be divided into two categories: those associated with airway processing and those pertaining to the Direct-Route Routine. These tables, in general, afford the computer a geographical picture of the Air Route Traffic Control Center area for which it must function. To do this, the tables must also reflect the geographical limits of flight plan routes to any point in the United States and sometimes beyond. The data pertaining to areas outside the center's boundaries must necessarily be restricted to the most frequently used fixes and airways.

For airway processing, the three primary tables are the Airway Table, the Airway-Fix Table, and the Airway-Junction Table. The Airway Table contains the airway identification, the Airway-Fix Table starting address, and the Airway-Junction Table starting address. Each airway has an Airway-Fix Table consisting of data for each fix along the airway within the center's area. Each airway also has an associated Airway-Junction Table which provides the junction information for any portion of a route

of flight in which the junction fix is omitted. These tables provide the program with the necessary data for establishing the limits of an airway segment of route and the construction of the Fix-Data Tables.

For the Direct-Route Routine to provide Fix-Data Tables for direct segments, there are seven tables of information required. Two of these are the Inside and Outside Fix Tables, the first containing the X-Y grid values for fixes inside the control area, and the second, the X-Y grid values for fixes outside the control area. The X Minimum/Maximum Table defines the eastern and western limits of the control area and is used to determine if the junction is inside or outside of the area. The Relative Direction Table contains the sine and cosine functions of each of the eight cardinal compass headings, and the Theta-Rho Table, the sine and cosine function of a circle and the relative cardinal compass heading corresponding to each degree. The Latitude Reference Table contains the mileage from the equator to the X axis for every 10 minutes of a degree of longitude, and the Longitude Reference Table contains the cosine of each 10 minutes of a degree of latitude as well as the mileage from the prime meridian to the Y axis for each listed latitude.

Processing Routines

The descriptions of the processing routines that follow are general and do not reflect the many special conditions which are described in the detailed narrative. It was decided that each program package should be self-contained, if at all possible, to keep to a minimum the transfer of data from general storage to the high-speed drum. It was also apparent that to make each package completely self-contained would result in an excessive repetition of program steps, so the Executive Routine was developed as a common processing routine available to all routines. In most cases, when a program completes an operation, its transit to the next program is by way of the Executive Routine.

Executive Routine: The Executive Routine functions as the director of the program, and during the operational period of the Phase I system, is always available on the high-speed drum. When a flight plan is entered into the system, it is the Executive Routine that reads in the message from the input High-Speed Paper Tape System, assembles it on two preselected, high-speed drum tracks, and prints out an acknowledgment of the input on the

supervisory typewriter. If the message contains remarks, they are stored in the Remarks Table, and the general storage address at which they are located is added to the assembled information for this flight. By use of the code distributor register, the alpha character identifying the kind of message acts as a selector to read in the appropriate processing routine and directs the program to the entry point in that routine for the required processing.

In addition, the Executive Routine provides several other services to the program such as printing out a running log of the computer operations on the supervisory typewriter, testing the Clock Readout Table for chronological processing of stored data, and building the Continuation Index Table.

Airway Routine: The primary function of the Airway Routine is the processing of the airway segments in any given route of flight. Because the majority of flights processed by the computer are airway flights, the building of the Flight Identification Table and the Flight-Data Table is handled by the Airway Routine, and the receipt of an en route or a proposed flight plan will cause the read-in of this program. After the construction of the two tables, the first segment of the route is tested for being direct. If the test is negative, the airway program continues the processing, making this test after each segment has been completed.

The airway segment processing consists primarily of two iterative program loops, the major one handling successive segments and the secondary loop, contained within the first, handling successive fixes within the segment. Initially, the limits of the segment are established; that is, the entry fix and the junction fix. The construction of the Fix-Data Tables is begun with the junction fix of each segment, and processing is continued back along the airway to, but not including, the entry fix since it was processed as the junction of the previous segment. Because each Fix-Data Table must contain the next fix address to maintain continuity, this backward processing method was developed in the interest of conserving computer time. The starting Fix-Data Table address is stored in the Flight-Data Table to complete the chain.

During each fix processing loop, the construction of a Fix-Data Table is accomplished. Most of the information comes from the Airway-Fix Table, which contains the constant information for the fix that is being processed. In addition to the constant

data and the next Fix-Data Table address, codes indicating special processing are included in this Fix-Data Table. These codes identify the coordination fix or the landing fix, and provide for a segment counter for the use of the Printout and Intercenter Message Routines in the tailoring of the route.

Termination of the processing is handled in two ways. In the development of the limits of the segment, a junction that is outside the geographical limits of the center area indicates to the program that the processing is to be terminated after the processing of this segment. If this indication is not received, a test made at the end of each segment processing will show that (1) there is another segment to be processed, (2) there are no more segments to be processed, or (3) the next segment will be obtained from a continuation message. The latter two determinations will terminate the processing in the airway program. If, at the start of a segment processing loop, the direct-route test indicates that this segment is direct, the Direct-Route Routine is read onto the high-speed drum for the processing of this segment.

Direct Routine: The Direct-Route Routine was developed to process route segments that are defined as being direct from one geographical point to another. The fixes defining the limits of these segments lie in four different categories. They may be described as the fix itself, a distance and direction (cardinal points of the compass) from the fix, a theta-rho (degrees and distance) fix, or a latitude and longitude fix. By use of a rectangular grid coordinate system and the conversion of the fixes to their respective X and Y values, the line of flight is established. All fixes whose X-Y values lie within a given distance of the line of flight are developed for printing.

Entry into the Direct Routine may be from the Airway Routine, the Departure/Modification Routine, or the Continuation Routine. In the Direct Routine, a series of tests determines which of the four types of direct segments are to be processed, and the routine is conditioned accordingly. As in the Airway Routine, Fix-Data Tables are built for each fix in the segment that is to be posted. Also, the same tests must be made at the conclusion of each segment processing loop to determine whether more processing is required and by which routine. If the next segment is airway, the Airway Routine is read out; if no further processing is indicated, the termination steps are followed and the program is directed to the Time Computation Routine via the Executive Routine.

Time Computation Routine: The Time Computation Routine, using the aircraft speed and the distance factor between the previous fix and the one being processed, computes the time of flight between the two fixes and adds it to the estimated time over the previous fix. This time, as well as the estimated time over the previous fix, is then stored in the Fix-Data Table. At this point, a test is made to determine whether or not it is time to print this strip. If the estimated time over the fix is within the next 40 minutes, the processing is directed to the Printout Routine; if it is not, a test is made to see if this fix posting is in the same sector as the last one printed, and an equal condition again leads to the Printout Routine. An unequal result terminates the processing, and the address of this fix is stored in the Clock Readout Table for later processing.

Since the logic indicated here requires the printing of a flight progress strip immediately after the time-to-print test, the Tailoring Routine and the Printout Routine are read onto the high-speed drum with the Time Computation Routine.

Tailoring Routine: The Tailoring Routine, as the name implies, tailors off the route segments that are no longer required for the fix posting that is to be printed or for the intercenter message to be transmitted. As previously stated, segment counters stored in the Fix-Data Tables are used for this purpose, and as the route is tailored, the succeeding segments are packed to the left, permitting the inclusion of segments heretofore assigned to a continuation message in the case of the intercenter message, and to rider strips for fix postings.

Printout Routine: In the Printout Routine, the stored data for this flight plan and the fix data for a flight progress strip are assembled on the output tracks for the printing device (High-Speed Printer or inquiry typewriter). After the actual strip printing, a series of tests is made to determine the next operation to be performed. The first test is to determine if this fix is the last fix posting for this flight. A negative causes the continuation of the Time Computation-Printout Loop. A positive results in the storage of the Flight-Data Table address in the Clock Readout Table for retention until it is time to erase all data pertaining to the flight. The positive result causes a test to determine the need for sending an intercenter message to an adjacent center's computer, providing the flight is to enter another center's area. If this is true,

still another test for time-to-transmit is required which, if affirmative, will read in the Intercenter Message Routine for immediate transmission of this flight plan or, if negative, will store the Fix-Data Table Address in the Clock Readout Table for chronological processing.

Intercenter Message Routine: The Intercenter Message Routine is similar to the Printout Routine in that it assembles a message for output. In this case, however, the message is formulated in the on-line format for teletype transmission to another computer. Prior to the operation, the routine must determine that the full route is available. If there is a continuation message indicated, no transmission may be made unless the continuation message has been processed and is available for transmission immediately after the parent message.

Cancellation Routine: The Cancellation Routine's primary function is erasing data in computer storage. If a flight plan is cancelled, a cancellation message will result in the erasure of the Flight Identification Table, Fix-Data Tables, Remarks Table, Continuation Table, and Clock Readout Tables associated with that specific flight. Therefore, any functions of the other programs which require data erasure will use a part or all of this routine to accomplish the purpose.

Readout Routine: The Readout Routine processes request messages for a repeat printing of any given flight progress strip or the printing of the balance of the fix postings for a given flight which have been stored for chronological processing.

Continuation Routine: The Continuation Routine builds the Continuation Table and provides the linkage required for associating this message with the parent message. As previously stated, the Executive Routine provides for a Continuation Index Table upon receipt of a flight plan message which contains a continuation code. The Continuation Index Table makes available the address of the Continuation Table. The balance of the route is stored in the Continuation Table as well as the starting Fix-Data Table Address for the flight. The address of the Continuation Table is stored in the Flight-Data Table for the purpose of establishing the chain of addresses for continuity.

After processing and storing the data in the Continuation Table, it is determined whether there are more segments in this flight to be processed or that the balance of the route pertains to another center's area and will be used only for a rider strip and

an intercenter message. If the latter is the case, the program is directed to the Printout Routine for the rider strip and to the Intercenter Message Routine if it is time to send the message.

If more segments are to be processed, the necessary links are established for processing, and the first segment of the continued route is tested for being direct or airway for the read-in of the appropriate routine.

Departure/Modification Routine: The Departure Routine and the Modification Routine were combined, since both must be capable of modifying flight plan information within the computer. For either type of message, a series of steps is followed that test the stored flight data for changes in the essential components of the flight plan. Any changes noted result in the new information being placed in the Flight-Data Table. A departure message with no route change is directed to the Time Computation Routine for processing. A modification of a proposal with no route change is transferred to the Printout Routine for a new proposed fix posting. A modification of an en route flight with no route change results in no additional action unless an intercenter message has been transmitted. If such is the case, an intercenter modification message is processed and transmitted to the appropriate center. Any changes in route results in erasure of the Fix-Data Tables and the reconstruction of those required for the new route. The processing of the new route is identical to the processing required for a new flight plan entry.

Error Routine: The Error Routine provides for the handling of two kinds of errors, input and machine errors. If an input error is detected, data pertaining to the flight are erased and the notification to the supervisory typewriter provides sufficient data for the corrected re-entry of the flight plan. When a machine error is encountered, a time-out feature is used to attempt recovery without stopping the computer. If the error recurs, a supervisory printout defines the problem area for corrective action.

EXTERNAL PROGRAM

The Phase I Computer (UFC-1) operates as an externally-programmed computer through the wiring of program steps on a 48-step main frame plugboard. In addition, there are plugboards on the input and output Translate and Format Control Units and the High-Speed Printer Unit. Programs developed for the UFC-1

incorporate both internally stored and plugboard-defined instructions in a single interrelated program to exploit the strongest features of each type of programming. A general description of the external programming methods being utilized in the Phase I laboratory follows.

Main Frame Plugboard

The main frame plugboard for the UFC-1 is programmed with various subroutines common to the internal program. Some of these are data-reduction and analysis routines, a routine which is common to the transfer of any internally stored subprogram from the general storage drum as an overlay to the working storage area, the square-root routine which is common to direct-route processing, and many small routines which serve to aid in faster processing methods and the alleviation of exceeding the capacity of the working storage area by internal programs. (These routines are further described in the plugboard documentation and the detailed description of the programs written for the main frame plugboard.)

Input and Output Translate and Format Control Unit Plugboards

These plugboards are programmed as part of the High-Speed Paper Tape System to transmit and receive data to and from inter- and intracenter agencies. They function separately from the central computer in determining acceptance, auditing, editing, translation and formatting of input and output messages. In the case of input, when the computer accepts the message, it is ready for immediate processing with no further validity checks necessary. In the case of output, the computer merely transfers the data to be transmitted to the output unit and returns to the Executive Routine. The output unit then translates, formats and transmits the message accordingly. These functions are described in detail in Appendices XX and XXI.

High-Speed Printer Plugboard

The High-Speed Printer is wired for use in an on-line configuration with the UFC-1. Its main function is to assign each character of a blockette of data, received from the computer, to its proper line and print position. For a strip to be printed properly, two blocketts of data are required. After placing all characters required from the first blockette, a signal from the plugboard causes a track switch of the High-Speed Printer track in order to obtain the second blockette of data. It then continues placing this data into its

proper lines and print positions to complete the strip, after which the strip is actually printed.

The plugboard also has the capability, on signal from the computer, to print only one line of print in order to void the last strip printed. It also suppresses zeros (changes zeros to nonprint ignore codes) in specified areas of the data received from the computer.

High-Speed Printer Paper Control Loop

The movement of the paper within the High-Speed Printer is controlled by computer to Input/Output control signals and punched holes in a paper control loop within the High-Speed Printer. The paper control loop for the Master Operational Program was punched so as to cause one strip-width movement of the paper (connected strips) for each depression of the "Home Paper" button. It also contains punched holes to cause the paper to move to the first print line on a strip each time the computer sends the proper signals (Computer to Input/Output control line E, Form Compensation 1) to the printer.

To cause the proper movement to home paper, a hole must be punched in channel 7 of the paper control loop every sixth line around the loop (see Figs. 2 and 3). There are five lines printed on each strip and the sixth line would be the first line of the next strip. Depressing "Home Paper" moves the strips one strip width.

To align the strips properly for printing, the loop should be put in position and the "Home Paper" button depressed before the strips are placed in the printer. If the strips are placed on the sprockets in the printer so that the perforation between the strips is aligned with the etched line near the print hammers, the strips should be aligned properly for printing. If alignment is not possible at first, the paper loop may have to be lifted and moved one or two sprocket holes, or the fine adjustment knob in the printer may be moved and the "Home Button" again depressed until the proper alignment is achieved. Each time thereafter that the "Home Paper" button is depressed, the paper control loop and the strips will move until a hole is sensed in channel 7 of the paper control loop, thus keeping the strips aligned in proper position to print the next strip. Once aligned, the position of the fine adjustment wheel should be noted and the position of the paper control loop should be

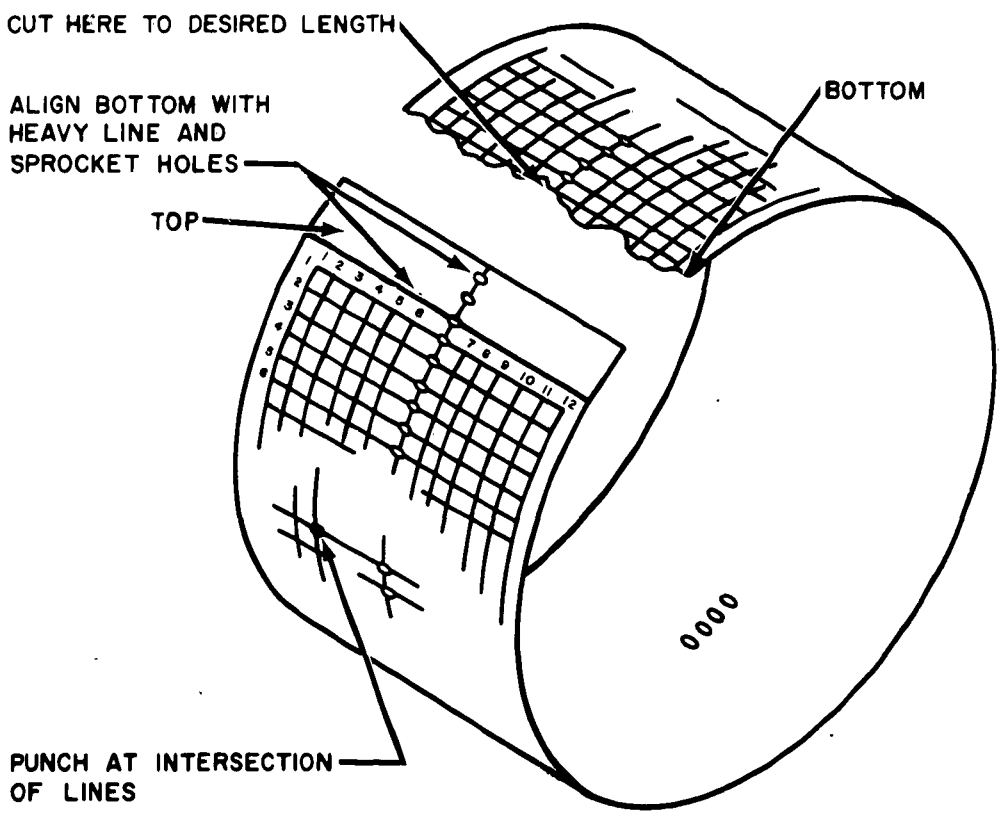

FIG. 2 HIGH-SPEED PRINTER PAPER TAPE LOOP

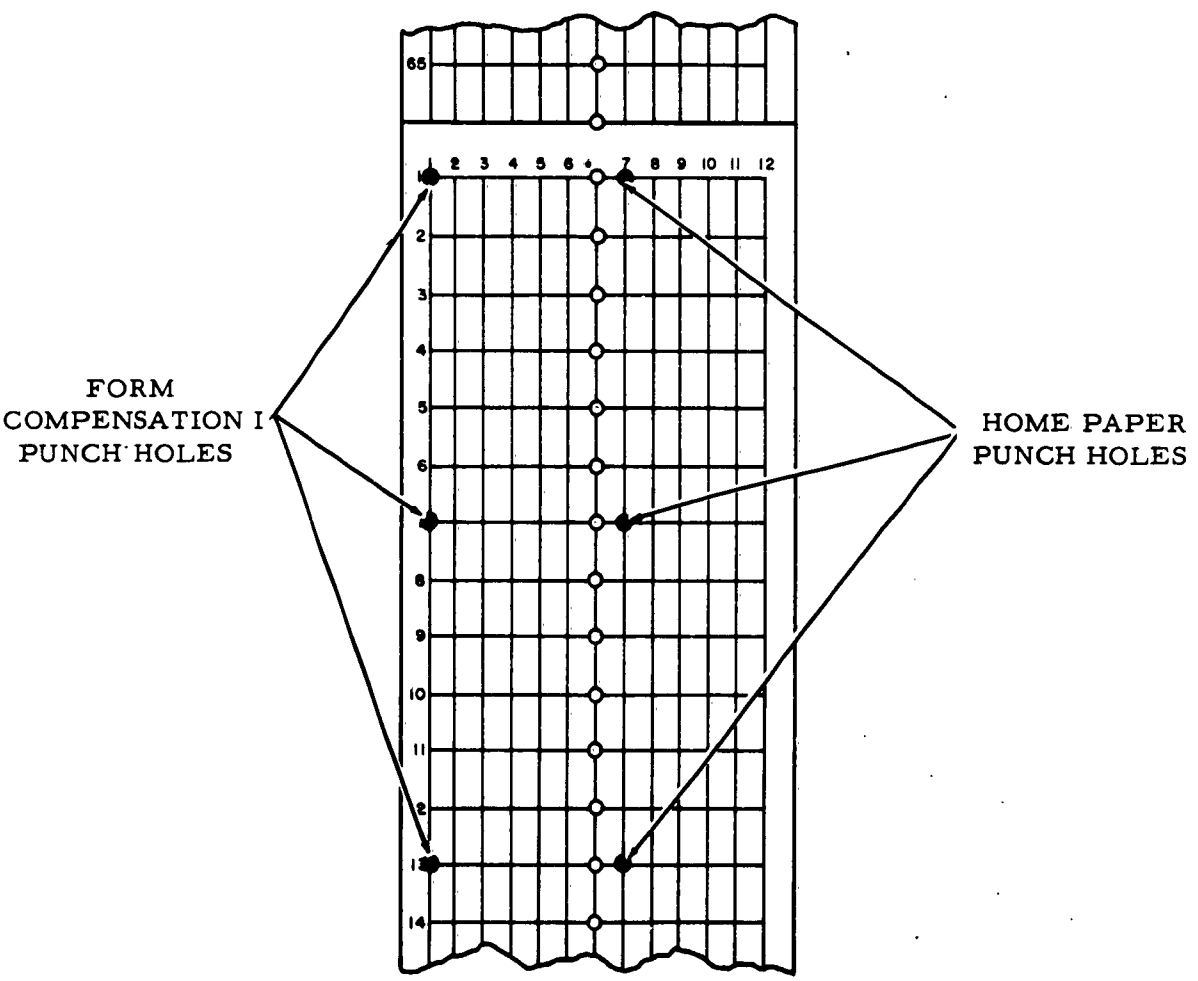

FIG. 3 HIGH-SPEED PRINTER PAPER TAPE LOOP PREPARED FOR MASTER OPERATIONAL PROGRAM

noted and the position of the paper control loop should be marked on the loop and the loop sprocket. Future alignment thus would mean only matching up the marks.

To cause the proper movement of the strips to line up each new strip on command from the computer, another hole must be punched in channel 1 of each of the same lines which were first punched in channel 7 (Fig. 3). Upon receiving the Form Compensation 1 signal from the computer, the paper control loop and the strips will move until a hole is sensed in channel 1, thus lining up the strips for proper printing of the next strip.

OPERATING INSTRUCTIONS

The operation of the Phase I system is divided into two major categories, the Synchrotape typewriter of the flight data position (FLIDAP) area and the operation of the computer complex. A description of the operation and controls of the Synchrotape typewriter is provided, as well as a detailed step-by-step narrative on flight plan entry and error correction. Sample format tapes with each character defined are included.

The operation of the computer complex describes the starting and ending requirements. This section includes the handling of the High-Speed Printer and supervisory typewriters, since these output devices are directly related to specific program stops. Supervisory printouts are illustrated and described.

SYNCHROTAPE PROGRAMMING AND OPERATION

The Remington Rand Synchrotape machine is used in Phase I Computer systems to enable local entry into the computer of flight plan messages. The Synchrotape machines are normally located in the FLIDAP area and are operated by assistant controller personnel.

The machine affords the operator the ability to compose flight plan messages for entry into the computer in rigid format without having to count the number of character entries to assure completion of each area, or field, of information. The machine also provides visual reference to entered information, by printing each character as it is entered, and multiple-message storage, pending computer acceptance, by punching a by-product paper tape.

The purpose of this section is to describe in detail the programming, operation and function of the Synchrotape.

Equipment and General Operating Description

Each Synchrotape is composed of three units: an electric typewirter, a floor-stand console cabinet, and an input substation control cabinet (Figs. 4 and 5). These units are cable-connected to each other, and the control unit is cable-connected to the High-Speed Paper Tape System input substation scanner.

The operation and functions of the Synchrotape are described below. A logical operation and information flow chart follows the description to illustrate the sequence of entry and transmission.

Each complete flight plan message entry is hereafter termed a "message." The by-product tape into which the message is punched is referred to as the "message tape;" the message tape reader is "Reader #2" (Fig. 5); the message format control tape is the "format tape;" and the format tape reader is "Reader #1" (Fig. 6).

Reader #1 is mounted on the rear panel of the floor-stand console. Reader #2 and the by-product paper tape punch are mounted on the front panel. At the start of each message, the operator enters the necessary function by depressing the space bar of the typewriter. This action transfers control of the printing and punching functions to Reader #1. Codes are read from the format tape until a "Reader #1 Stop" code is encountered. Reader #1 stops, and control of printing and punching functions is returned to the operator's keyboard of the typewriter. The operator then enters the message in the order shown in ATM Circular 200-12, depressing the space bar to complete each field of information. In the event the number of characters of information to be placed in a particular field is less than the number required for that field, depressing the space bar causes padding characters, normally periods (. . .), to be read from the format tape. These are printed by the typewriter and punched into the message tape to complete the required number of characters. For example, "Aircraft type" is allotted four characters and a space code. A Martin 404 type is entered as "M4." Depressing the space bar following the "M4" causes the field to appear as "M4..".

The operator continues entering information in this fashion until he has either used all of the format, in which case a "continuation" message is required, or entered all of the information necessary on the message. He then depresses the "Tape Skip" key. This causes Reader #1 to advance the format tape through any unused

FIG. 4 SYNCHROTAPE TYPEWRITER

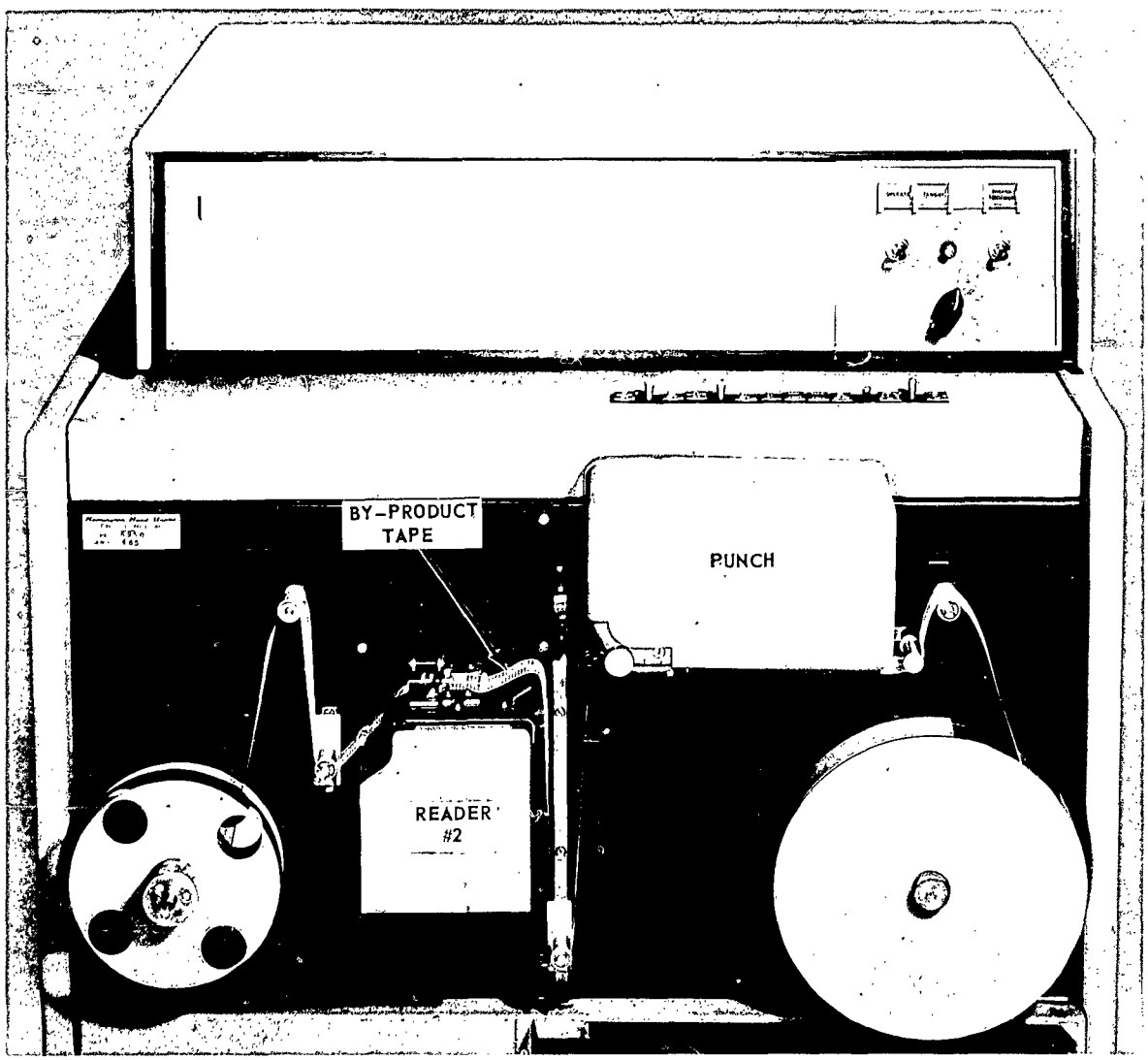

FIG. 5 SYNCHROTAPE CONSOLE, PUNCH AND READER #2

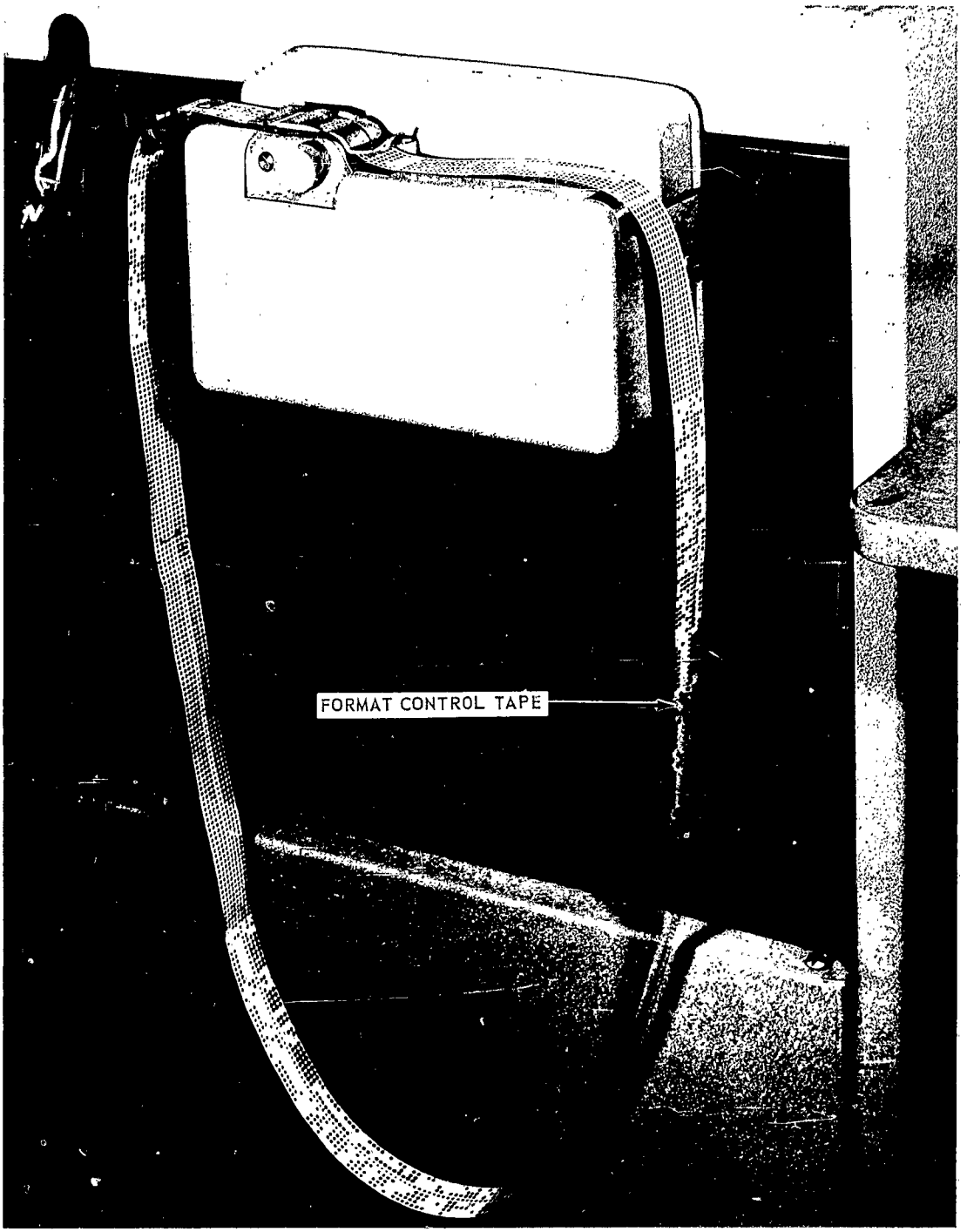

FIG. 6 SYNCHROTAPE READER #1

portions of the format until encountering a "Print Restore" code in the format tape. No printing or punching takes place between the "Tape Skip" depression and the "Print Restore" code.

Printing and punching functions resume with the "Print Restore" code, and the end-of-message codes are read from the format tape and punched into the message tape. After the end-of-message codes are punched into the message tape, a "Reader #2 On" code on the format tape causes the substation unit to request service from the input scanner, and Reader #1 comes to a stop. The operator may start composing a second message at this point.

The input scanner may be cycling through a number of substations, accepting a message from each in turn at a speed of 600 words per minute. The message just composed is accepted when the scanner reaches the Synchrotape substation and detects the service request. On completion of the read-in, the scanner disconnects from that substation and advances to the next substation in sequence.

The only circumstances under which an individual Synchrotape has two messages or more taken from it in succession will be when no other substation is requesting service. A block diagram (Fig. 7) provides the sequence of operation for the entry of a flight plan message.

Programming

Composing a format tape for the Synchrotape machine is not complicated once an understanding of the function codes is attained. Each of these codes initiates a specific function within the machine. A series of function codes will, of course, initiate a series of functions. A number of such series appears in the sample tape layouts (Figs. 8, 9, and 10).

The programmer need only determine the required format and select the codes necessary to attain that format. Punching of these codes into a format tape is done on the Synchrotape by setting the appropriate switches to bypass format control. (These settings are described in a later section.) When the format tape has been punched, the two ends are glued or otherwise fastened together, forming a loop. It is then ready for mounting on Reader #1 and use as a format control tape.

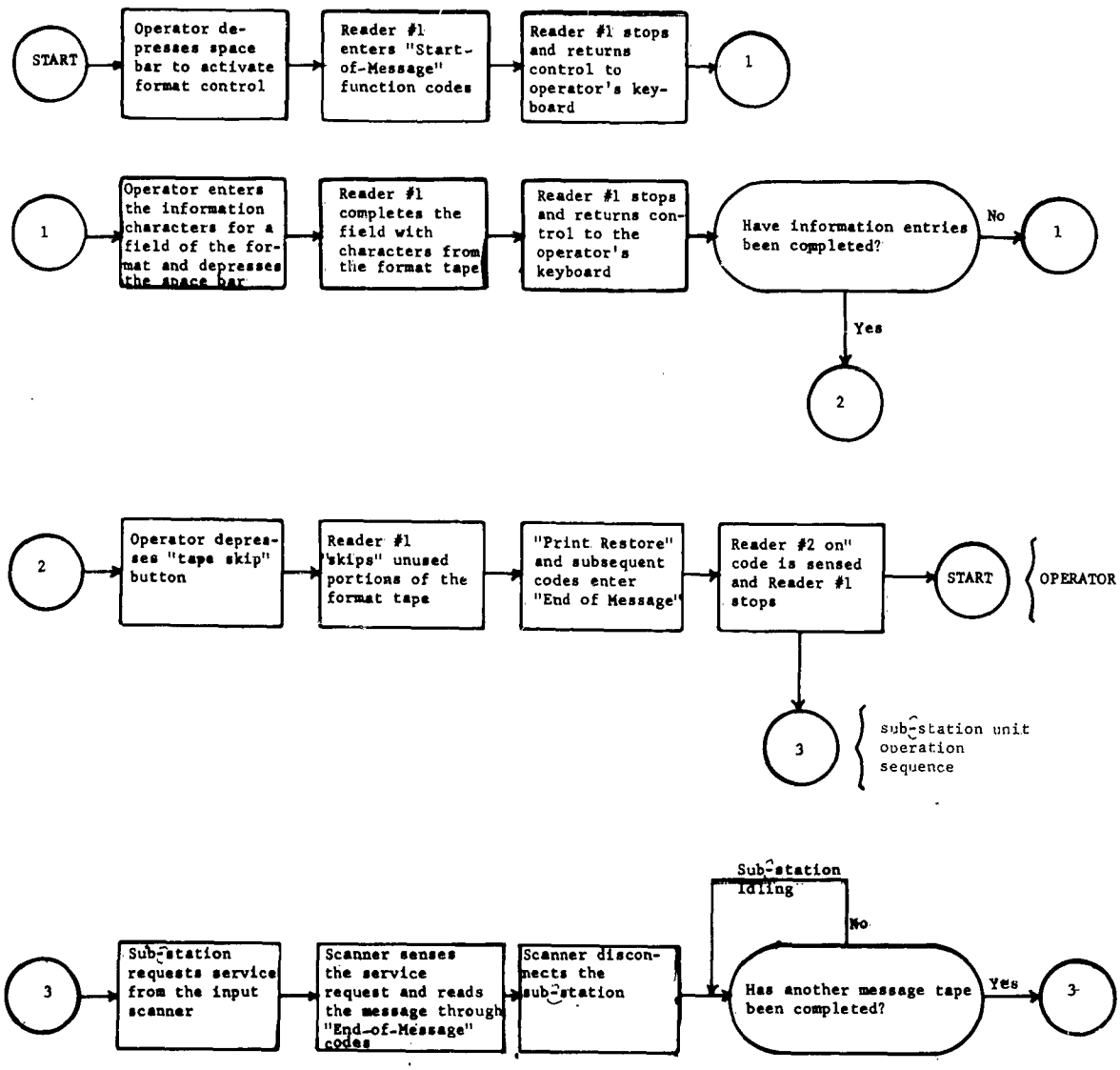

FIG. 7 SYNCHROTAPE MESSAGE INPUT OPERATION SEQUENCE

FIRST LINE

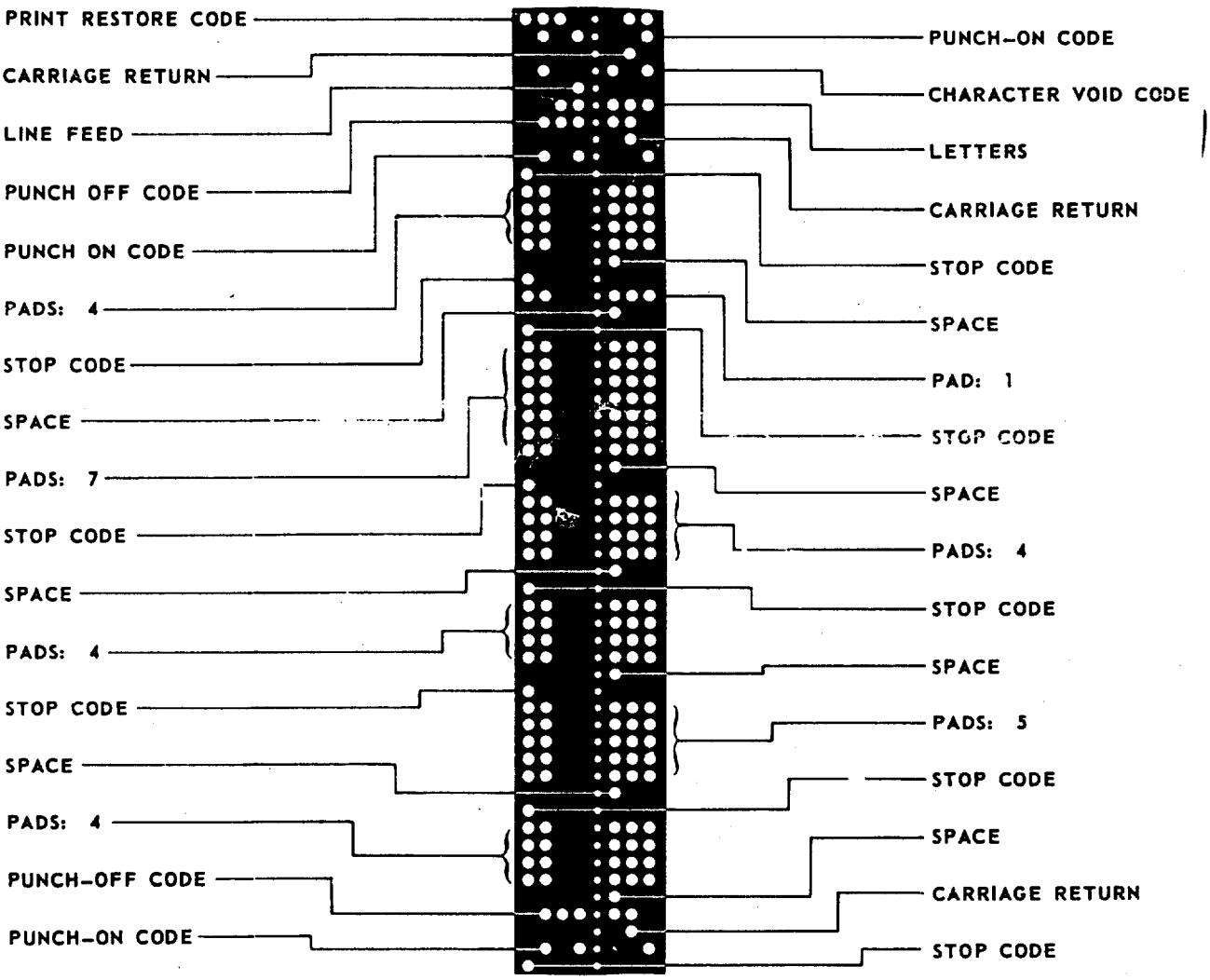
PRINT RESTORE CODE
CARRIAGE RETURN
LINE FEED
PUNCH OFF CODE
PUNCH ON CODE
PADS: 4
STOP CODE
SPACE
PADS: 7
STOP CODE
SPACE
PADS: 4
STOP CODE
SPACE
PADS: 4
PUNCH-OFF CODE
PUNCH-ON CODE
PUNCH-ON CODE
CHARACTER VOID CODE
LETTERS
CARRIAGE RETURN
STOP CODE
SPACE
PAD: 1
STOP CODE
SPACE
PADS: 4
STOP CODE
SPACE
PADS: 5
STOP CODE
SPACE
CARRIAGE RETURN
STOP CODE

SECOND LINE

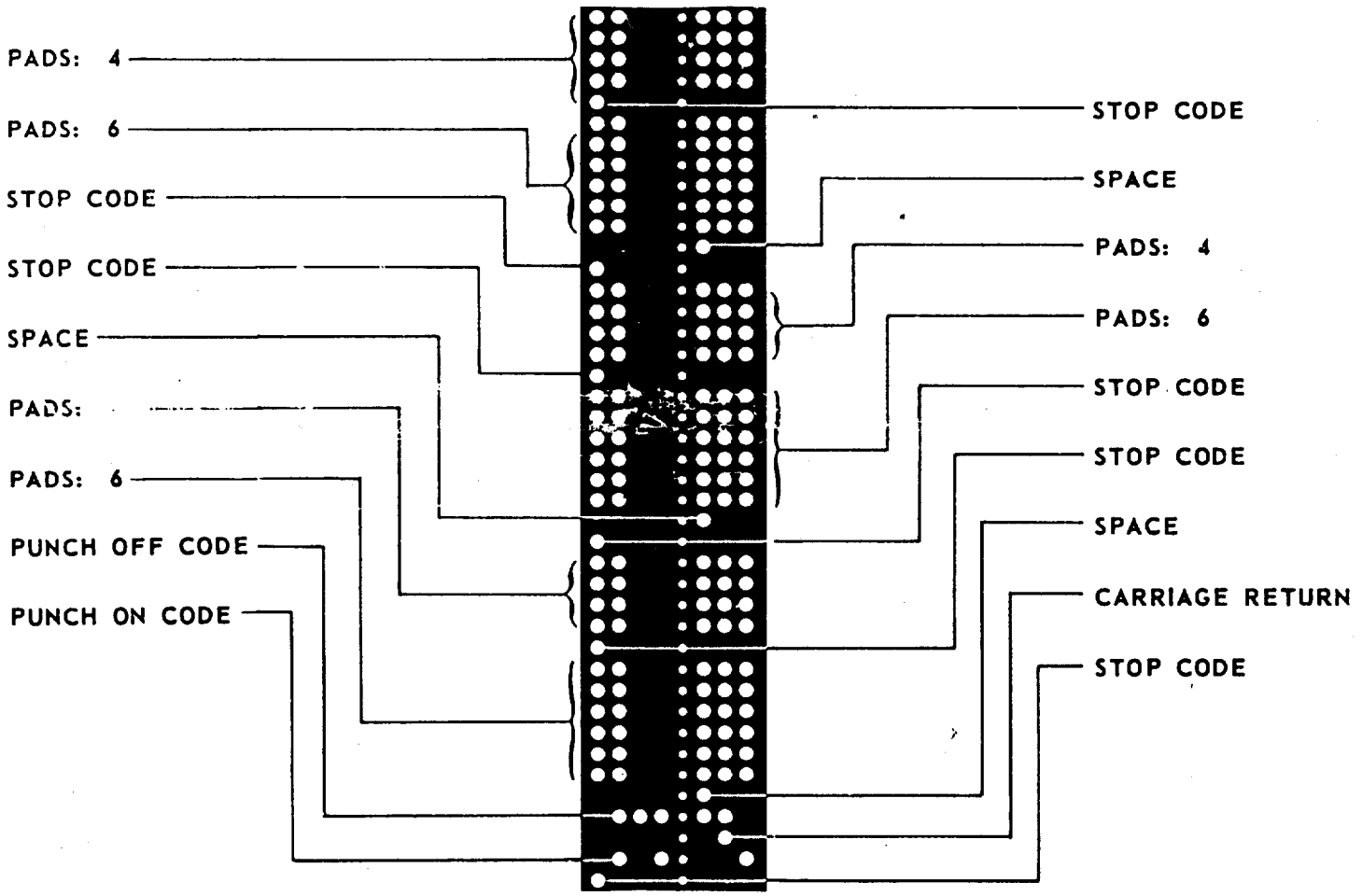

FIG. 8 SAMPLE FORMAT TAPE FOR MAST

THIRD LINE

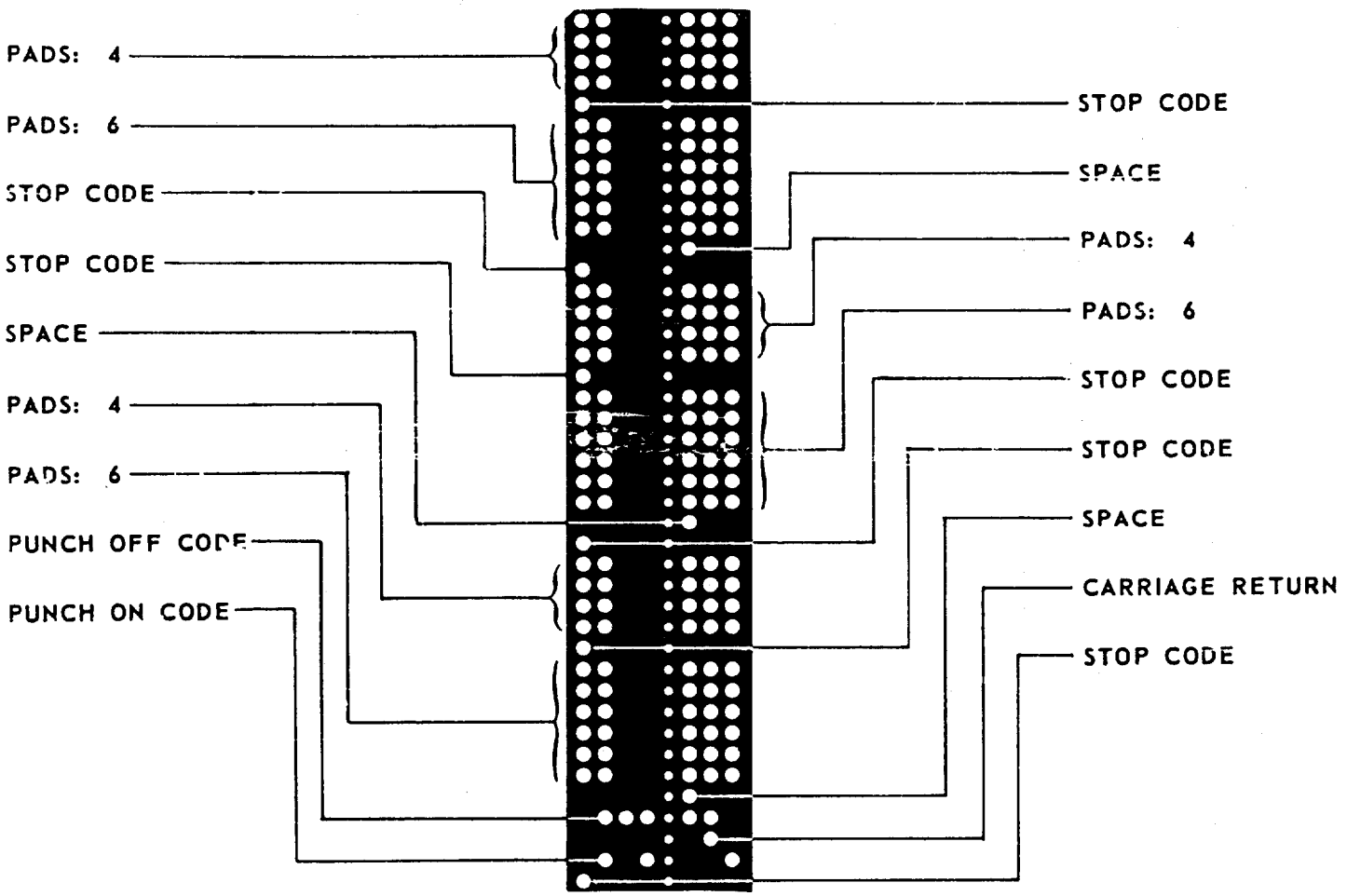

OR MASTER PROGRAM

3

FOURTH LINE

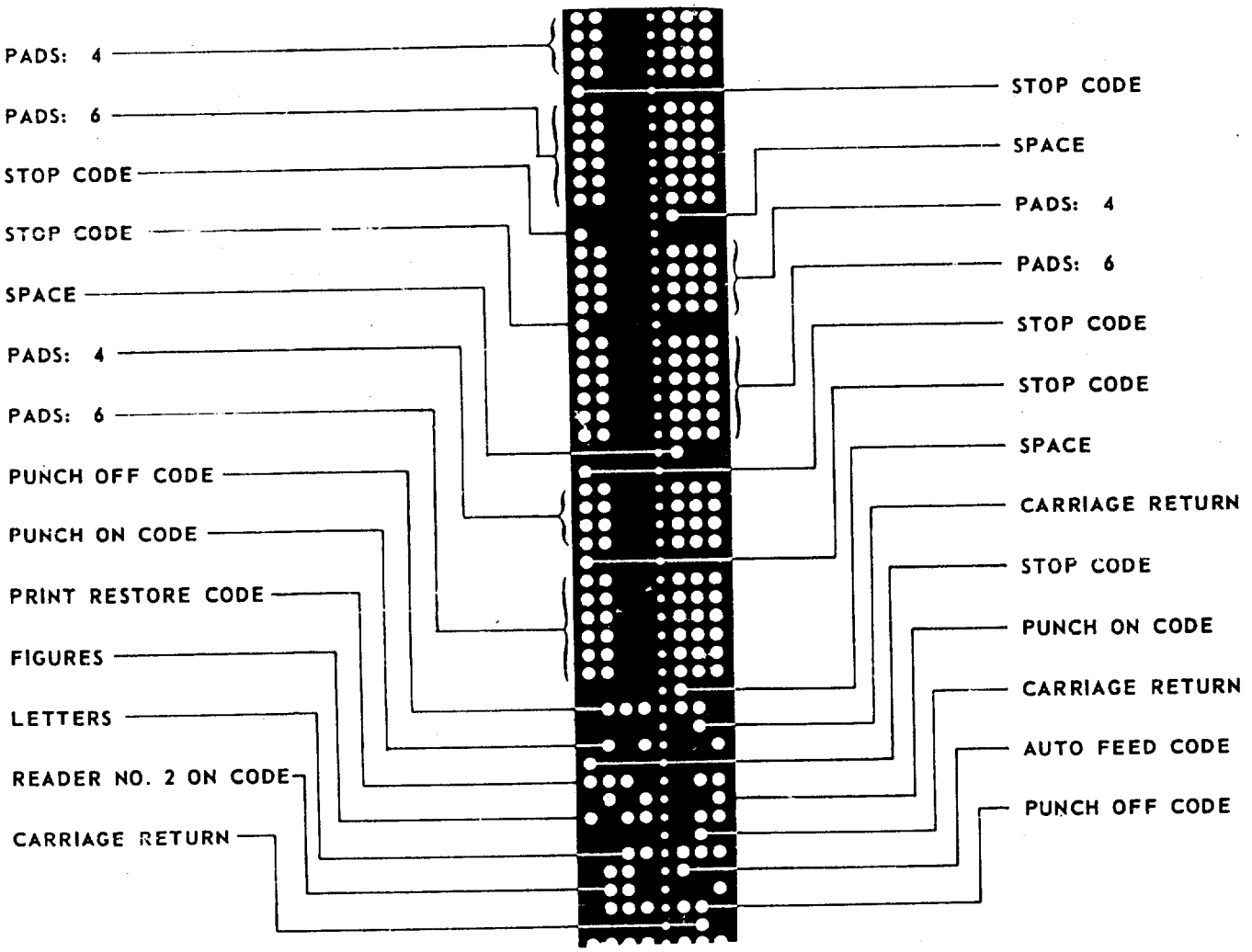

4

LINES 1 AND 2

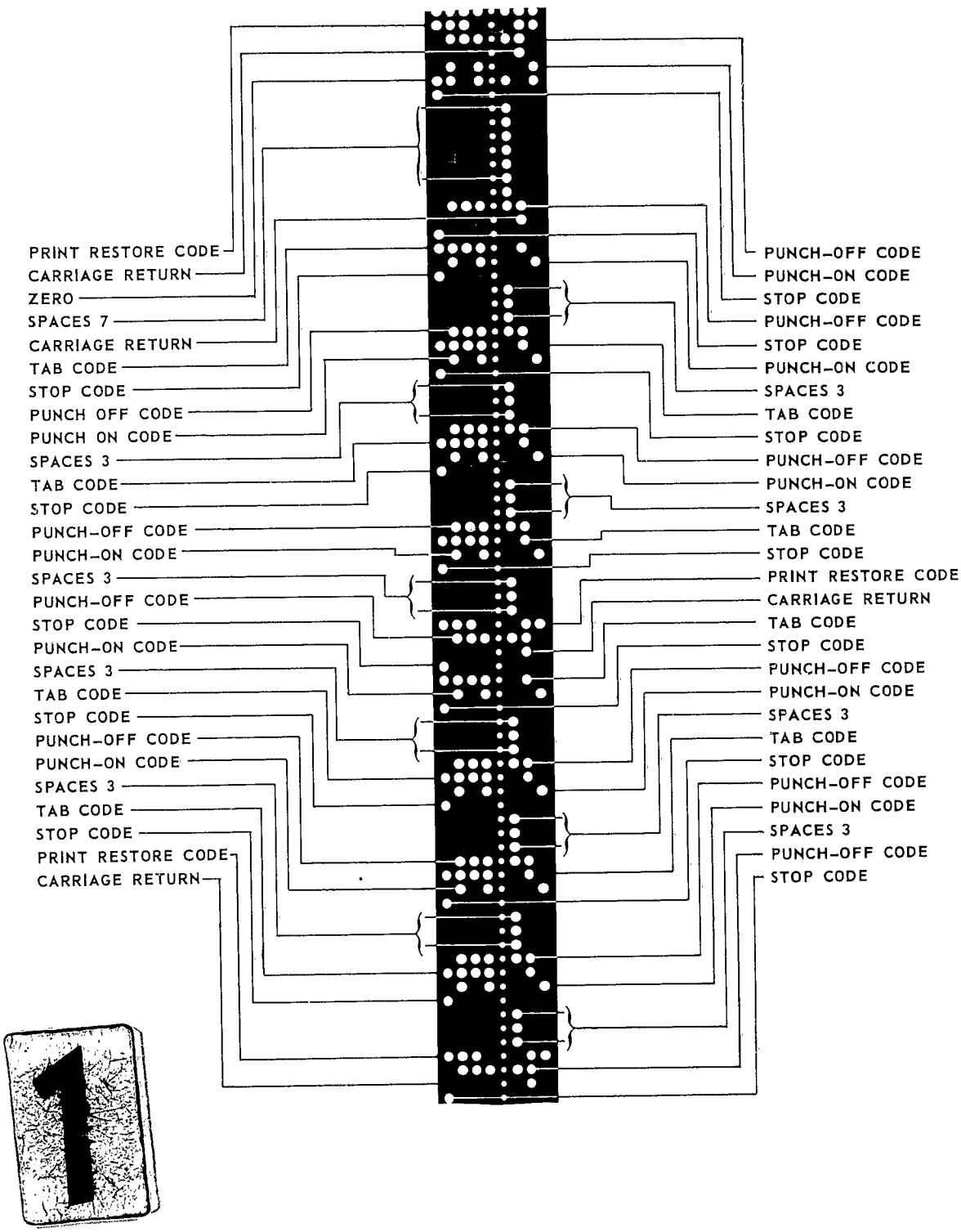
PRINT RESTORE CODE
CARRIAGE RETURN
ZERO
SPACES 7
CARRIAGE RETURN
TAB CODE
STOP CODE
PUNCH OFF CODE
PUNCH ON CODE
SPACES 3
TAB CODE
STOP CODE
PUNCH-OFF CODE
PUNCH-ON CODE
SPACES 3
PUNCH-OFF CODE
STOP CODE
PUNCH-ON CODE
SPACES 3
TAB CODE
STOP CODE
PUNCH-OFF CODE
PUNCH-ON CODE
SPACES 3
TAB CODE
STOP CODE
PRINT RESTORE CODE
CARRIAGE RETURN
PUNCH-OFF CODE
PUNCH-ON CODE
STOP CODE
PUNCH-OFF CODE
STOP CODE
PUNCH-ON CODE
SPACES 3
TAB CODE
STOP CODE
PUNCH-OFF CODE
PUNCH-ON CODE
SPACES 3
TAB CODE
STOP CODE
PUNCH-OFF CODE
PUNCH-ON CODE
SPACES 3
PUNCH-OFF CODE
STOP CODE

1

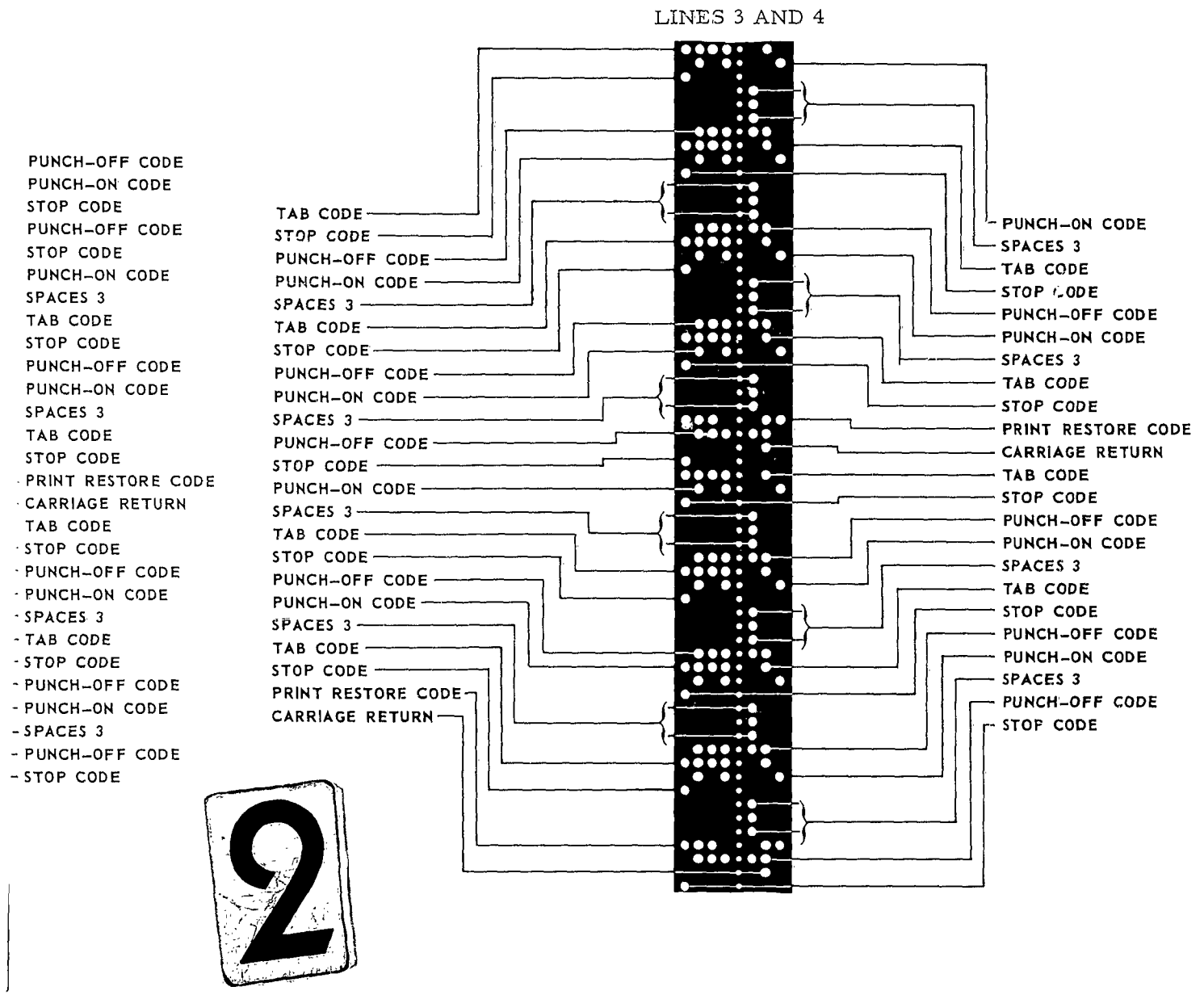

FIG. 9 SAMPLE FORMAT TAPE FOR LOADING PROGRAM AND TABLES

LINES 9 AND 10

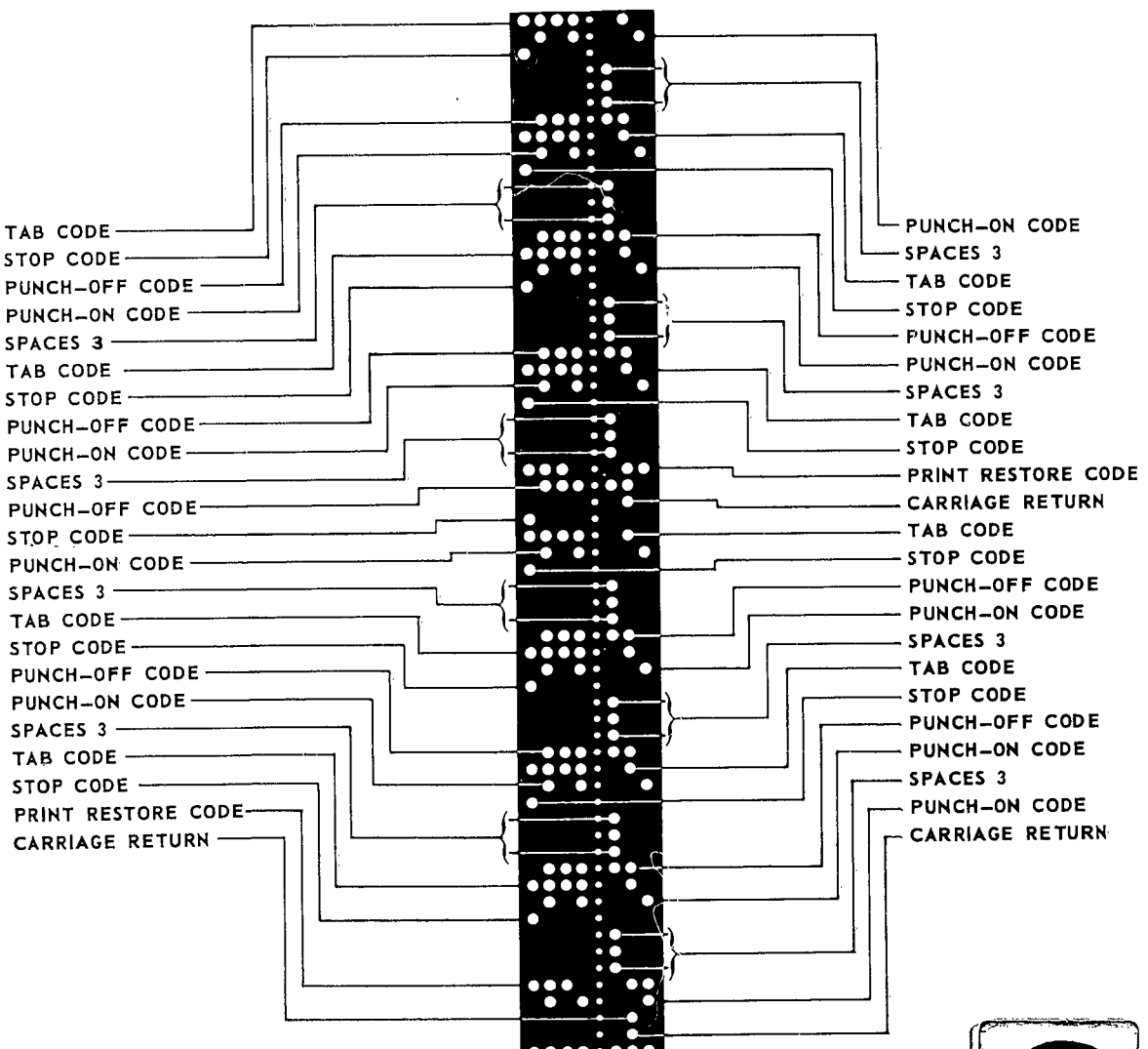

LINES 1 AND 2

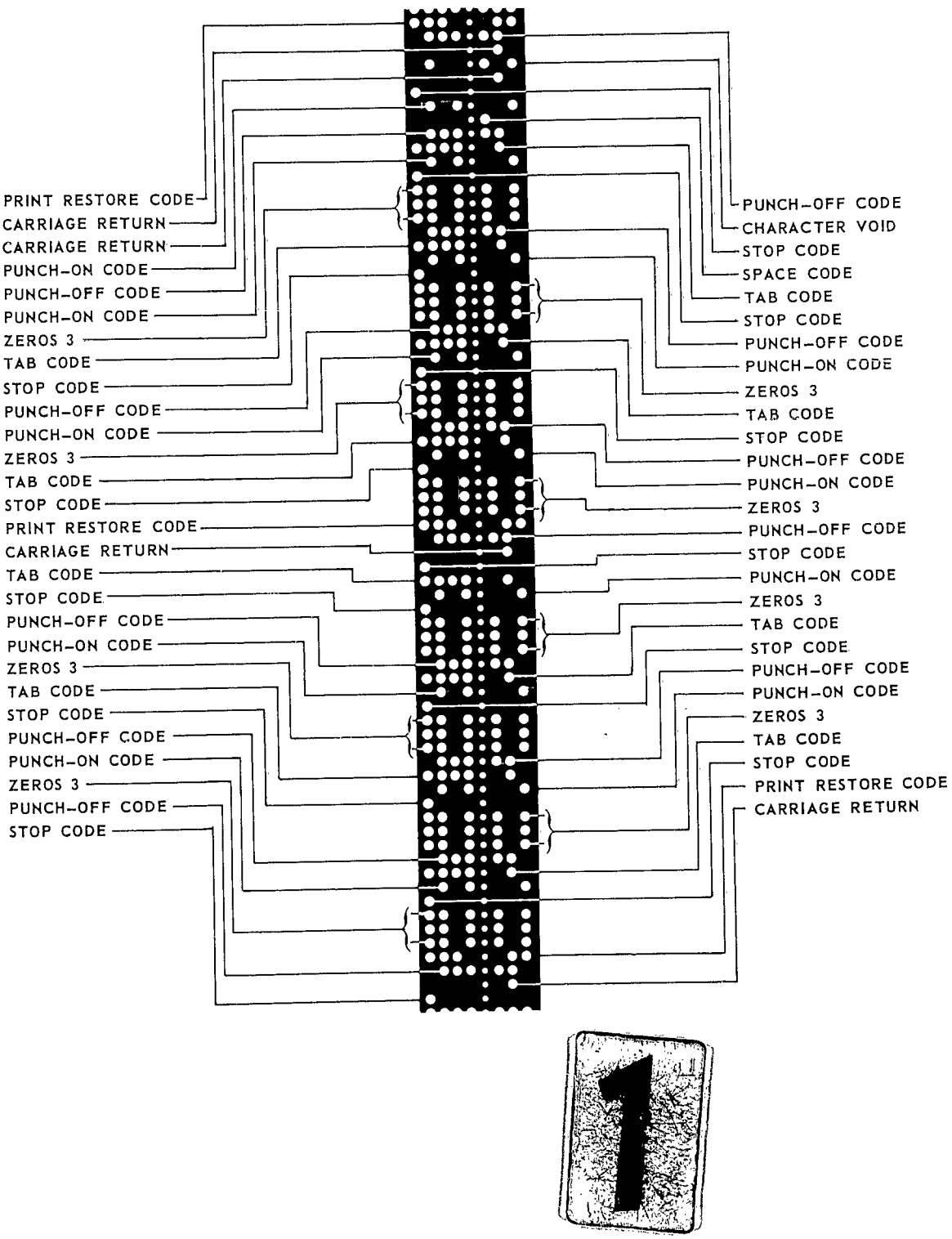
PRINT RESTORE CODE
CARRIAGE RETURN
CARRIAGE RETURN
PUNCH-ON CODE
PUNCH-OFF CODE
PUNCH-ON CODE
ZEROS 3
TAB CODE
STOP CODE
PUNCH-OFF CODE
PUNCH-ON CODE
ZEROS 3
TAB CODE
STOP CODE
PRINT RESTORE CODE
CARRIAGE RETURN
TAB CODE
STOP CODE
PUNCH-OFF CODE
PUNCH-ON CODE
ZEROS 3
TAB CODE
STOP CODE
PUNCH-OFF CODE
PUNCH-ON CODE
ZEROS 3
PUNCH-OFF CODE
STOP CODE
PUNCH-OFF CODE
CHARACTER VOID
STOP CODE
SPACE CODE
TAB CODE
STOP CODE
PUNCH-OFF CODE
PUNCH-ON CODE
ZEROS 3
TAB CODE
STOP CODE
PUNCH-OFF CODE
PUNCH-ON CODE
ZEROS 3
PUNCH-OFF CODE
STOP CODE
PUNCH-ON CODE
ZEROS 3
TAB CODE
STOP CODE
PUNCH-OFF CODE
PUNCH-ON CODE
ZEROS 3
TAB CODE
STOP CODE
PRINT RESTORE CODE
CARRIAGE RETURN

1

LINES 3 AND 4

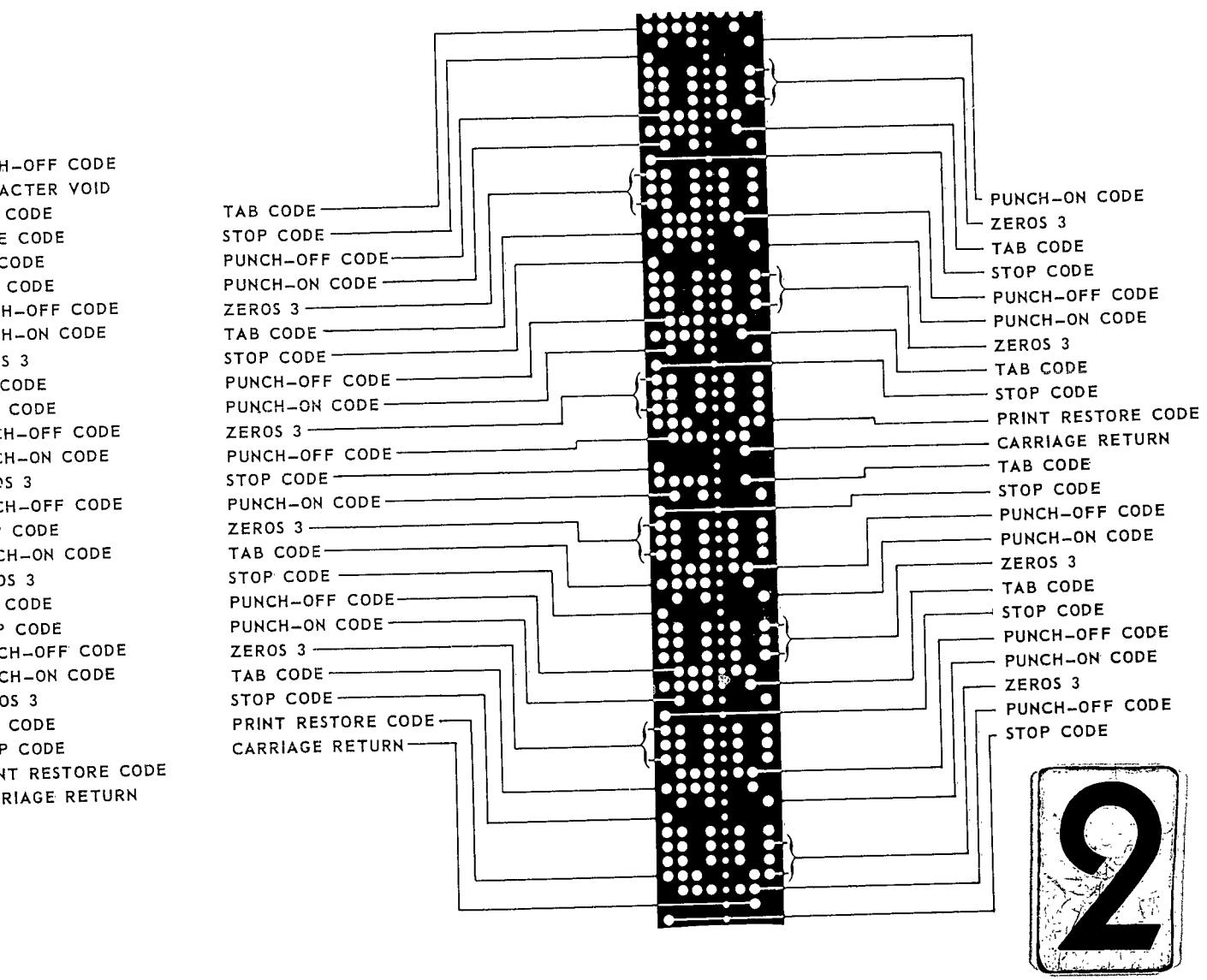

FIG. 10 SAMPLE FORMAT TAPE FOR LOADING UTILITY PROGRAMS

LINES 9 AND 10

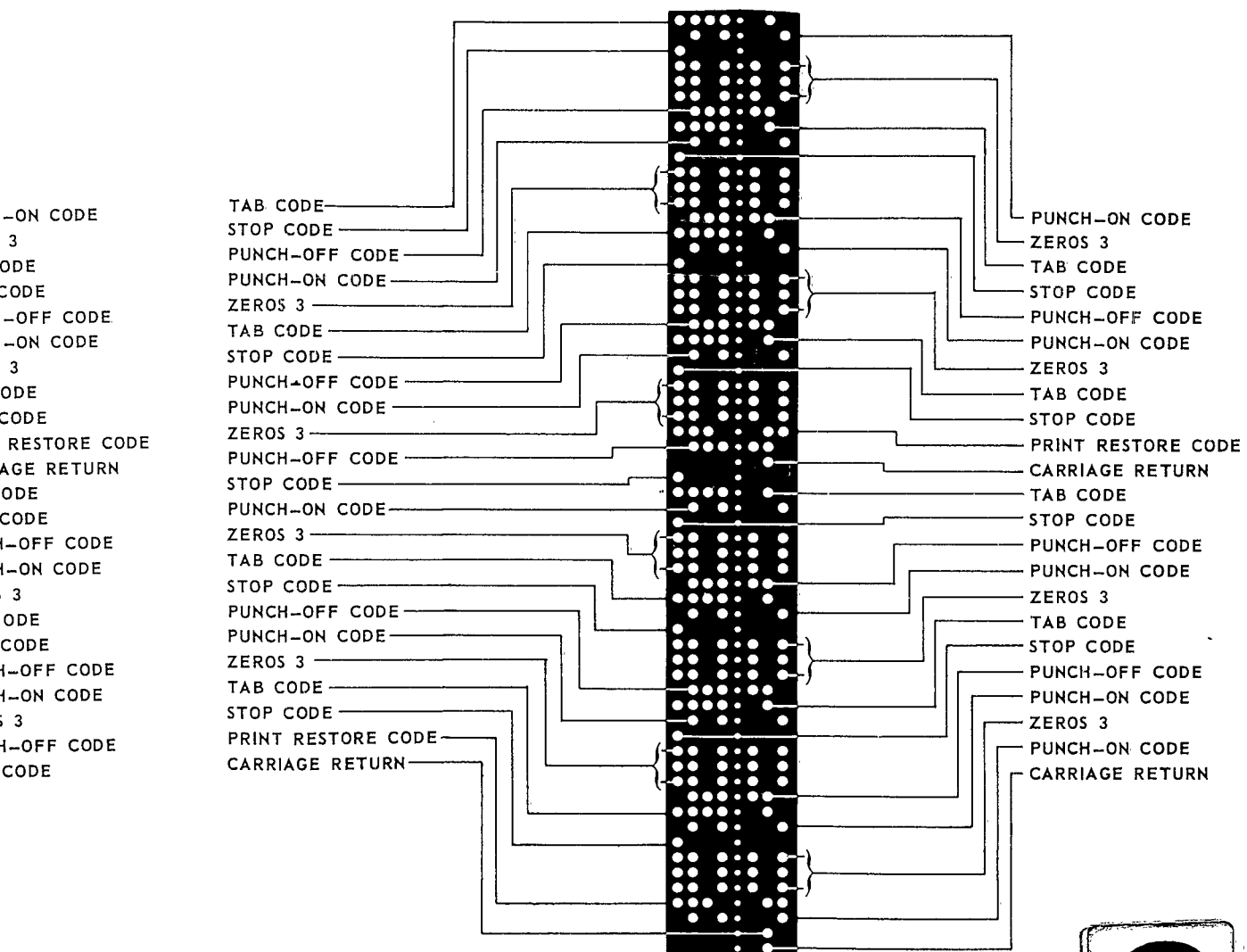

GRAMS

3

The tape that is prepared is in seven-level punched code. Five levels of this are normal Baudot punched code. The sixth level is a precedence level, determining the character to be lower or upper case (alphabetic or numbers), and the seventh level is a character-parity level; that is, the seventh level is punched only if there is an even number of holes punched in the other six levels.

Function Codes

The following codes perform various functions when encountered in other portions of the Phase I system. The only functions that are treated here are those performed when they are encountered in a format tape when it is being used to control a message format. The levels punched for each code are illustrated in Fig. 11.

Reader #1 Stop: The "Reader #1 Stop" code stops automatic reading from the format tape of Reader #1 and returns control to the operator's keyboard on the typewriter.

Auto Feed: The "Auto Feed" code causes the punching of 9 1/4 inches of "Delete" codes into the message tape. This is to insure that all of the message is read, when Reader #2 is activated by the input scanner, without activating the "Taut Tape" switch.

Reader #2 On; The "Reader #2 On" code causes Reader #2 to advance to the first character of the message other than delete codes and request servicing from the input scanner.

Print Disconnect: The "Print Disconnect" code causes the typewriter to disregard further codes read from the format tape until a "Print Restore" code is read.

Print Restore: The "Print Restore" code causes the typewriter to resume printing functions after they have been discontinued by sensing of a "Print Disconnect" code. If the "Print Restore" is not preceded by a "Print Disconnect," the "Print Restore" has no effect on Synchrotape operations.

Message Void: The "Message Void" code is used only on the message tape, when the operator has committed an error in composing the message and wishes to void it and restart composition. The actual message voiding is a function of the Input Paper Tape System programming; hence, the "Message Void" code, under

Char/Function	Levels Punched							
	Par.	Prec.			Baudot			
Letters			●	●	·	●	●	●
Figures	●		●	●	·		●	●
Line Feed				●	·			
Carriage Rtrn					S	●		
Slash (/)		●	●		P	●	●	●
Period (.)	●	●			R	●	●	●
Tabulate	●	●	●	●	O		●	
Reader #1 Stop	●				C			
Auto Feed		●	●		K	●		
Reader #2 On		●	●		E			●
Print Disc		●		●	T	●	●	●
Print Restore	●	●	●		·		●	●
Msg Void		●			H		●	
Remarks	●	●		●	O	●	●	
Punch On		●		●	L			●
Punch Off		●	●	●	E	●	●	
Delete	●	●	●	●	S	●	●	●
Field Void		●	●	●	·			
Char Void		●			·	●		●
1		●	●	●	·	●		●
2	●	●	●	●	·			●
3	●	●	●		·			
4		●		●	·		●	
5	●	●			·			●
6	●	●	●		·	●		●
7	●	●	●	●	·	●		
8		●		●	·	●		
9		●			·		●	●

Char/Function	Levels Punched							
	Par.	Prec.			Baudot			
0	●	●		●	·	●		●
A	●		●	●	·			
B			●		·		●	●
C				●	S	●	●	
D	●		●		P		●	
E			●		R			
F			●		O	●	●	
G				●	C		●	●
H	●				K	●		●
I	●			●	E	●		
J			●	●	T		●	
K	●		●	●	·	●	●	
L	●			●	H			●
M					O	●	●	●
N	●				L	●	●	
O	●				E		●	●
P				●	S	●		●
Q	●		●	●	·	●		●
R	●			●	·		●	
S	●		●		·	●		
T					·			●
U			●	●	·			
V	●			●	·	●	●	●
W			●	●	·			●
X	●		●		·	●	●	●
Y			●		·	●		●
Z	●		●		·			●
					·			

FIG. 11 SYNCHROTAPE CODES

different Paper Tape System programming, possibly may not perform a message void function. The "Message Void" nomenclature refers only to the functions initiated by the code when it appears on a flight plan message tape.

Remarks: The "Remarks" code, like the "Message Void;" is used only on the message tape. The operator will punch this code just prior to entering unformatted remarks as part of a flight information message. The Synchrotape machine permits use of this code only once during each message by disabling the button, after it is used, until a "Print Restore" code is detected on the format tape. The "Remarks" functions are a part of the Input Paper Tape System programming, activated when the "Remarks" code is detected on a flight plan message. Thus, "Remarks" nomenclature refers only to the operations initiated by the code when it is used on a flight plan message.

Punch On: The "Punch On" code causes restoration of punching functions after they are disabled by detection of a "Punch Off" code in the format tape. If no "Punch Off" code precedes the "Punch On," the "Punch On" code will perform no functions.

Punch Off: The "Punch Off" code causes disabling of punching functions when detected in the format tape. This code is used on the format tape when printing or typewriter functions are desired without activating any punching of extraneous codes into the flight plan message. For each time that the "Punch Off" code is used in the format tape, a "Punch On" code must be used following it to restore message tape punching functions.

Carriage Return: The "Carriage Return" code causes the carriage of the typewriter to return the point of type to the extreme left of a line. An automatic paper feed of one line is also activated by this code.

Delete, Character Void and Field Void Codes: These codes are functions of the Input Paper Tape System, and the functions are described separately in the following paragraphs.

Delete Code: This code is used to overpunch an erroneous character that has been entered into the message tape. It is deleted when the message is being read by the Paper Tape System. It is usable only if the erroneous character is detected by the operator

before he progresses to another field of the message. When so detected, the operator has the ability to backspace and overpunch the erroneous character and all subsequent characters. He then may continue from the point at which the erroneous character occurred.

Character Void: This code is an alternate method available to the operator for deleting an erroneous character. It is usable only immediately following the erroneous character. On detecting the erroneous entry, the operator must enter the "Character Void" code, manually back up the format tape by two places, and commence from the point at which the erroneous character was entered. The manual backspacing of the format tape by two places is necessary due to the erroneous character advancing the format tape one place, and the entry of the "Character Void" code advancing it the second place.

NOTE: The operator will find it much easier to merely backspace with the "Backspace" key, overpunch the erroneous character with a "Delete" code ("Delete" code does not advance the format tape), and then continue.

Field Void: This code is used when the operator detects one or more characters in a field that are in error and he wishes to void the whole field. The operator must enter the "Field Void" code, manually backspace the format tape to the start of the field, and recommence from the start of the voided field. If the "Field Void" code is used, it must be used before the spacebar has been depressed at the end of the field. Should the operator attempt to use it to void a field after that field has been completed, it will not cancel that field out of the message.

NOTE: As with use of the "Character Void" code, the operator will find it much easier to use the "Backspace" key to return to the erroneous character and overpunch with "Delete" codes, resuming from the point at which the erroneous character was entered.

Operator Instructions

The following operator instructions are concerned only with the formation of flight plan messages plus some additional explanation of the purposes and operation of the various special buttons, switches, and keys of the Synchrotape (see Figs. 4, 5, and 6).

The instructions assume that the operator is entering on duty at the beginning of the day and must activate the Synchrotape before commencing to enter flight plan messages.

1. Place the "Power On-Off" switches on the floor-stand console and the typewriter in the "On" position.

2. Place the "AC Power On-Off" switch, located inside the panel of the substation cabinet, in the "On" position.

3. Place the "Tape Step On-Off" switch on the console cabinet in the "On" position.

4. Place the "Punch On-Off Select" switch on the console cabinet in the "Select" position.

5. Place the "Rewind On-Off" switch on the console cabinet in the "On" position.

6. Depress the "Tape Skip" button on the typewriter. This advances the format tape to the beginning of a message format.

7. Check the "Reader Lockout" light on the substation cabinet to insure that the light is out. If the light is on, push the "Clear-Read" switch up to the "Clear" position in order to clear the lockout condition. This switch has a spring return on it and will not remain in the "Clear" position.

8. Check the "Hold Off-Hold On" switch on the substation cabinet for being in the center, or "Neutral" position.

When the Synchrotape has been operated during the day prior to an operator's entry on duty, the operator entering on duty may disregard the above instructions, but should check each of the switches mentioned above for being in the described position and the format tape for being at the start of a flight plan message format.

NOTE: The substation address switch on the substation cabinet must not be changed at any time except at the direction or by the FLIDAP supervisor. The setting of this rotary switch generates a character that is sent to the computer, identifying a particular Synchrotape substation. Indiscriminate changing of this switch setting may result in considerable confusion in tracking down the Synchrotape at which errors in information entered originated. This is especially true during periods of machine malfunction when the operator's initials on the entered message may be garbled on presentation to the computer.

Following are the steps an operator must perform in composing a flight plan message. The messages will, of course, vary in length. Information content of a particular field within a message may also vary. The specific number of characters allowable for a particular field and the maximum allowable length of a message will, however, remain rigidly constant. Hence, if the operator types information beyond the end of a particular field, the message is rejected by the computer.

The following entries are described with reference to a "proposed" flight plan (message kind N) with the AT-200-12 field designation (fa, fb, fc, and so forth) appearing in parentheses. For the purposes of this description, a route segment is defined as the "fix" at which an aircraft will enter a portion of his route of flight and the portion of that route following the fix (the airway, "direct", latitude-longitude coordinates, and so on). Where a field requires a space code at the end, it will be entered automatically from the format tape (Fig. 11).

1. Addressor (fa):

   Enter the operator's initials and the "minutes" of the time at which entry is started.

   Example: The operator is John Doe and the message entry is started at 1408 Greenwich time. The addressor field should read:

   JD08

   Four characters plus a space code are the maximum allowable.

2. Kind of Message (fb):

Enter the kind of message.

Example: The message concerns a "proposed" flight plan. The message kind is entered as:

N

One character plus a space code.

3. Aircraft Identification (fc):

Enter the commercial flight trip number, military identification or civil identification.

Example: The flight is a civil aircraft with an identification of "NC123." The entry appears as:

N123...

Seven characters plus a space code.

4. Aircraft Type (fd):

Enter the type of aircraft. If an abbreviation is required to conform to the maximum field length allowable, use the standard abbreviations specified in ATM contraction manual.

Example: The aircraft type is a Beechcraft Bonanza. The entry would appear as:

BNZA

Four characters plus a space code.

5. Aircraft Speed (fe):

Enter the aircraft speed in nautical miles per hour (knots).

Example: The aircraft speed is 150 knots. The entry appears as:

0150

Four characters plus a space code.

6. Proposed Departure Time (ff):

Enter the proposed departure time.

Example: The pilot estimates departure time as 1432 Greenwich time. The entry appears as:

P1432

Five characters plus a space code.

7. Altitude (fg):

Enter the altitude requested by the pilot.

Example: The requested altitude is 9000 feet. The entry appears as:

0090

Four characters plus a space code.

8. Coordination Fix (fh):

This field contains the coordination fix identification on an en route kind of flight plan message. It is blank for a "Proposed" (N) kind of message; however, the operator depresses the space bar to fill the field with padding characters.

Example: After the operator depresses the space bar and the format tape stops, the field appears as:

....

Four characters. No space code follows this field.

9. Second Portion of Coordination Fix Field (fh):

This field contains information only if the fix identification is to be modified by a distance and direction from the fix on a direct-route flight. If there is no information supplementing the fix identification, it will be a blank field for an "en route" (E) kind and a "proposed" (N) kind of message. It will,

however, always contain information for a continuation (X) kind of message. Since this narrative is dealing with a proposed (N) kind of message, this field is blank. The operator again, depresses the space bar to fill the field with padding characters.

Example: After the operator depresses the space bar and and the format tape comes to a stop, the field appears as:

.....

Six characters plus a space code.

NOTE: On completion of items 8 and 9 the entries appear as:

.....

Ten characters plus a space code.

10. Departure Airport (fj):

The departure airport is entered in this field in three characters of identification. The operator must then depress the space bar to enter the pad character to complete the field.

Example: On completion, the field appears as:

DCA.

Four characters. No space code follows this field.

11. Second Portion of Departure Airport (fj):

The operator enters the first portion of the route of flight in this field.

Example: The first airway is V16. The operator enters the V16 and depresses the space bar. When the format tape stops, the field appears as:

V16...

Six characters plus a space code.

12. After entry of the departure airport and first route portion, the complete field appears as:

DCA. V16...

Ten characters plus a space code. This is the first segment of route.

13. Route Segment (fk): The next field is the fix at which the aircraft leaves V16. This is entered in the same manner as the departure airport.

Example: The pilot proposes to leave V16 at Coyle intersection.

This is entered as:

CYN.

Four characters.

14. Second Portion of Route Segment (fk):

The second airway is entered in this field.

Example: The second airway is V501. This is entered in the same manner as V16; that is, the operator enters V501 and depresses the space bar. When the format tape stops, the field reads:

V501..

Six characters plus a space code.

15. After entry of the transition fix (CYN) and the second airway, the full field reads:

CYN. V501..

Ten characters plus a space code. This is the second full route segment.

16. Third Route Segment (fl):

The third route segment is composed of the fix at which the aircraft leaves V501 and the third portion of route. These are entered in the same manner as described for the first and second route segments.

Example: The flight plan calls for the aircraft to leave V501 at Ambrose and proceed direct to Idlewild. This is entered as:

ABS. D.....

Ten characters plus a space code.

17. Entry of route segments may continue up to a maximum of seven full segments for a single proposed (N) kind of message. More than seven segments of route for a particular flight will require the operator to compose a continuation (X) message. The next entry on the proposed message presently being composed, however, is the destination. This is entered as the destination fix in three characters and the route portion of the field is padded.

Example: The flight plan is terminating at Idlewild. The destination entry appears as:

IDL.....

Ten characters plus a space code.

18. If there are any remarks on the flight plan that are pertinent to the conduct and control of the flight, they are the last entry to be made. The operator must depress the "Remarks" button on the typewriter prior to entering the remarks. This frees the space bar to perform the normal function of spacing one space for each depression.

Example: The flight plan contains the remarks "heart patient aboard." These are entered as:

HEART PATIENT ABOARD

after the operator depresses the "Remarks" button.

A maximum of 36 characters is allowable for remarks.

19. After all entries are made, the operator depresses the "Tape Skip" button on the typewriter console. This advances the format tape to the "End of Message" without performing any further printing or punching functions. The "End of Message" restores printing and punching function, punches the final codes into the message tape, and causes the substation to request service from the Paper Tape System. When the format tape comes to rest, the Synchrotape is ready for entry of another message. This is true, even though the message just completed has not been read into the computer. After all of the flight plan entries are accomplished and the "Tape Skip" button completes its functions, the foregoing message appears on the Synchrotape typewriter printed copy as follows:

*

JD08 N N123... BNZA 0150 P1432 0090

..... DCA.V16... CYN.V501..ABS.D.....

IDL..... HEART PATIENT ABOARD

The following are additional message samples as they would appear on the Synchrotape typewriter printed copy:

Airfile:

JD08 E N1234.. DC3. 0160 E1455 0100

DCA..... DCA.V16... IDL.....

Proposal with continuation message:

JD10 N N123456 T6... 0145 P1350 ØOTP

..... DCA.V16... IDL. V588..

COR.V39... SSB.V232.. FED.V29...

ABE.V162.. FNK.V30... CTTYHAR...

JD11 X N123456 DCA. ....

SEG.V31... HAR.....

Proposal with direct segments:

JD10 N N12.... B17 . 0190 P1300 0150

..... DCA.D.... 20E.BAL...

SBY.090020 3906-07525 ENO.....

Departure message:

JD11 D N12.... .... D1300 ....

..... DCA.....

NOTE: Type, speed, altitude or route change will be processed by filling in the appropriate areas.

Modification message en route (airfile sample):

JD10 M N1234.. .... E1515 ....

ENO..... DCA..... ENO.V16...

CYN.V501.. IDL.....

NOTE: Change of route commencing at ENO with ENO time 1515. Other components may also be changed. Until the advent of updating equipment, modification of en routes are confined to route changes.

Modification message, proposal:

JD10 M N123456 .... P1350 0080

..... DCA.....

NOTE: Change in altitude depicted. Other components may be changed as well, including proposed time. However, time, changed or not, must be included.

Readout message (uses either aircraft identification or computer flight number):

JD45 R AF132.. 10N. ENO. ....

NOTE: This format prints a duplicate of the desired fix posting if it has already been printed. If it has not, all strips up to and including this fix are printed.

JD45 R AF132.. NS.. ENO. ....

NOTE: This format is provided for a flight which passes over the same fix several times and will print the strips for a succeeding loop back to this fix.

JD45 R A132.. ....

NOTE: This format provides for the printing of the balance of the unprinted strips for this flight.

Cancellation message (uses either aircraft identification or computer flight number):

JD45 C AF123.. DCA. 9999 ....

Operator Error Correction

There are a number of methods available to the operator for correcting errors made during message composition. All of the character correction errors depend on the operator detecting his error before the field of information being entered is completed and the format tape has advanced to the next field or subfield of information. These methods are outlined below. Due to the manual operations required by the last two and the possibility of error, the first method is recommended.

Correcting an erroneous character by deletion: If the operator commits an erroneous entry and detects it immediately, before any further characters are entered, he need only use the backspace key on the typewriter, depress the "Delete" button on the typewriter console and continue from that point, entering the correct character.

Example: In entering the aircraft type in the proposed message, the operator makes the following error:

BZ

He then backspaces, deletes, and types correctly

BNZA

If the operator wishes to avoid the overtype, he can manually advance the paper by one line. This produces the copy shown below.

BZ
NZA

If the operator detects an error in entry after he types in several more characters but is not at the end of the field, he can backspace to the point at which the error was made, delete the erroneous character and all succeeding characters and continue from the point at which the erroneous entry was made.

Example: In entering the aircraft identification, the operator discovers the following error just before depressing the space-bar to complete the field:

B123

He then backspaces to the "B," depresses the "Delete" button four times, and continues with the correct character entry.

N123

Again, if the operator wishes to avoid the overtype, he manually advances the paper by one line.

The above method is most desirable in correcting errors because the backspace key activates backspacing of the message tape and format tape simultaneously with the backspacing of the typewriter carriage. The operator must be extremely careful not to backspace too far. Doing so will backspace the format tape to special function codes that do not activate message tape punching

of characters, and as a result of this backspacing, put the message entirely out of format. This is not true if the erroneous entry occurs after several characters in the field are entered. Backspacing one or two spaces too far, in such a circumstance, merely means that the operator has to re-enter the characters into which he backspaced (in order to advance the format tape and message tape to the erroneous character point), and then insert his deletions.

Character correction by use of the "Character Void" key: If the operator detects an erroneous character entry immediately after it is made, he depresses the "Character Void" key (this will enter a star on the message copy), uses the manual knob on Reader #1 to backspace the format tape two places (one place for the "Character Void" and one place for the erroneous character), and resumes by typing in the correct character.

Field correction by use of the "Field Void" key: If the operator detects an erroneous character entry within a field after one or more additional characters are typed after the character in error, but before the field is complete, he may use the "Field Void" key. Use of this key will enter an asterisk on the message copy. The operator then uses the manual knob on Reader #1 to backspace the format tape to the beginning of the voided field, and resumes his entries with the first character of that field.

If the manual backspacing of the format tape in methods 2 and 3 is neglected or performed incorrectly, the message will be rejected when entered into the computer.

Message Void: If the operator detects an error after a field is complete but before the message is complete, he depresses the "Message Void" button on the typewriter console and then the "Tape Skip" button.

Cautionary Measures: If a message is complete (that is, if the operator has made all the entries for that message and depressed the "Tape Skip" button), and that message contains erroneous information, it will be read into the computer and the program will attempt to process it as a normal message. Whether or not the message is rejected by the processing depends entirely on where the erroneous information occurs (an incorrect altitude could be entered and the error routine would not detect this). Therefore, flight progress strips will be printed and forwarded to the control

sectors with the erroneous information on them. In order to prevent such an occurrence, the Synchrotape operator must scan each message for being correct in its entirety prior to depressing the "Tape Skip" button.

A number of the switches and buttons on the Synchrotape machine should not be used by the operator during normal flight plan message composition. If any of these switches or buttons are activated or have their settings changed, the reaction may be to lock the particular Synchrotape machine out of the system, cause it to read a portion of a message without transmitting the message or cause the computer to reject all messages originating at that particular Synchrotape machine. The following list of these controls indicates their location on the equipment.

Substation Unit (Fig. 5):

1. All switches and buttons inside the panel of the substation unit other than the "AC Power On-Off" switch.

2. "Hold On-Neutral Hold Off" toggle switch. This is a switch on the outside panel of the substation unit.

3. The "Reader Clear-Neutral-Read" toggle switch. At times, especially at the start of a particular Synchrotape machine's operational day, the operator will have to use the "Reader Clear-Neutral-Read" toggle switch on the outside panel of the substation unit to clear a "lockout" condition of the unit. Clearing the reader may cause it to advance through a length of "Leader" characters on the message tape in order to reach the start of a message. The operator must be extremely careful that this switch is not depressed to the "Read" position as this will cause it to read message tape without the information going anywhere. The "Read" position merely advances tape. It does not cause the information on the tape to be forwarded to the computer.

Floor-Stand Cabinet Console (Fig. 5):

1. The "Reader #1 On" button.

2. The "Non-Print" button.

3. The "Tape Feed" button.

   Activation of this button will cause punching of 9 1/4 inches of "Leader" characters.

4. The "Punch On-Off-Select" switch.

   This switch should always be in the "Select" position during normal operations. Putting the switch into the "On" position will cause it to punch invalid function codes from the format tape. The result will be the rejection of all messages originating at the particular Synchrotape machine.

On the Typewriter Console (Fig. 4):

1. The "Stop Code" button.

2. The "Auto Feed Code" button.

3. The "Reader #2 On Code" button.

4. The "Print Disconnect Code" button.

5. The "Print Restore Code" button.

6. The "Punch On Code" button.

7. The "Punch Off Code" button.

   NOTE: If the operator should use any of the above seven buttons on the typewriter during message composition, it will cause an invalid code to be punched into the message tape, with the result that the message will be rejected by the computer.

8. The "Tape Feed" button.

   Like the "Tape Feed" button on the floor-stand console, this will cause punching of 9 1/4 inches of "Leader" characters into the message tape.

Loading Programs and Tables from Synchrotape

Following is a description of the format and operation for loading programs and tables from Synchrotape.

The operator initially depresses the space bar and the format tape (Fig. 9) progresses through Reader #1 to the first code, punching a zero in the by-product tape as the unit record length for the general storage address of this blockette of data. The operator then types the drum section, channel, and angular address, and again depresses the space bar. The format tape moves through Reader #1, the carriage returns the typewriter and stops again. At this point, if the operator desires, he may type the program address for this line of data and it will not be punched on the by-product tape. The operator depresses the space bar, and the format tape tabs the typewriter carriage to the first tab setting. The operator is now ready to type the first three characters of program or table data. Having typed these three characters, the operator depresses the space bar and the format tape tabs the typewriter carriage to the next tab setting. The operator types three characters and again depresses the space bar. This procedure is repeated until 12 characters of data have been typed. The operator then depresses the space bar and the format tape returns the typewriter carriage to the start position for the next line of data to be typed by the operator. The procedure for typing the remaining nine lines of data is identical to that explained for typing the first line. When the operator has typed the last (120th) character of data, he depresses the space bar and the format tape causes the typewriter unit to activate two carriage returns, where it is positioned at the start of the tape for the next blockette of data.

Loading Utility Programs from Synchrotape

Following is a description of the Synchrotape format and operation of the loading of utility programs by Synchrotape (Fig. 10). The operator initially depresses the space bar, and the format tape causes the unit to print a star without punching the by-product tape, indicating that the unit is conditioned and ready to operate. At this time, the operator may type the program address of this line without punching the by-product tape. The operator depresses the space bar again, and the format tape moves through Reader #1, causing a space code to be punched on the by-product tape, and tabs the typewriter carriage to the first tab setting. The operator is now ready to type the first three characters of data. Having completed this,

he again depresses the space bar and the format tape tabs the typewriter to the next tab setting. The operator types the next three characters of data and again depresses the space bar, repeating this procedure until completing the first line of data. Having typed the 12 characters of data for line 1, the operator depresses the space bar and the format tape returns to the typewriter carriage to start position. The unit is now ready for the second line of data. The procedure for entering the remaining nine lines of data is identical to that explained for the first line of data. When the operator has typed the last (120th) character of data, he depresses the space bar, and the format tape causes the typewriter unit to activate carriage returns and conditions the unit for the next blockette of data.

Figure 12 provides the Synchrotape key to the Univac code translation.

PROGRAM AND COMPUTER COMPLEX OPERATION

During a normal run of the Master Operational Program, it is necessary to perform some manual operations to start, end, or correct the normal processing. The instructions following are for normal special conditions which may be encountered in a day's operation. No attempt has been made to determine operating instructions necessary to correct for abnormal conditions, each of which must be analyzed individually by the operator or programmer to effect proper recovery.

Start of Run: To start a normal run of the Master Operational Program, the following conditions must be established:

1. Set the left margin of the two supervisory typewriters as far to the left as possible without causing the type bars to strike the guides; then set two tab stops 6 and 17 spaces from the left margin, respectively.

2. Set the clock to the exact Greenwich time of the facility.

3. Turn off the timer and all alternate switches and clear the timer panel.

4. Put the master general storage magnetic tape on Magnetic Tape Unit (MTU) I (see Fig. 13).

SYNCHROTAPE KEY	BIT CONFIGURATION PUNCHED ON PAPER TAPE	LOAD-UNLOAD PLUGBOARD TRANSLATION TO UNIVAC CODE
STOP CODE	ØØØØØ Ø1	¢
AUTO FEED	ØØ1Ø1 1Ø	'
READER NO. 2 ON	1ØØØ1 1Ø	/
PRINT DISCONNECT	1111Ø 1Ø	t
PRINT RESTORE	11ØØ1 11	?
MESSAGE VOID	Ø11ØØ 1Ø	VOIDS BLOCKETTE
REMARKS CODE	Ø111Ø 11	;
PUNCH ON	1ØØ1Ø 1Ø	i
PUNCH OFF	Ø1111 1Ø	#
CHARACTER VOID	1Ø1ØØ 1Ø	$
FIELD VOID	ØØØ11 1Ø	r
TAB	Ø1Ø11 11	,
- (MINUS)	Ø1ØØ1 1Ø	-
/ (SLANT)	111Ø1 1Ø	+
LINE FEED	ØØØ1Ø ØØ	I
FIGURES	11Ø11 Ø1	Σ
. (DOT)	111ØØ 11	.
LETTERS	11111 ØØ	β
SPACE BAR	ØØ1ØØ Ø1	Δ

FIG. 12 SYNCHROTAPE KEY TO UNIVAC CODE TRANSLATION

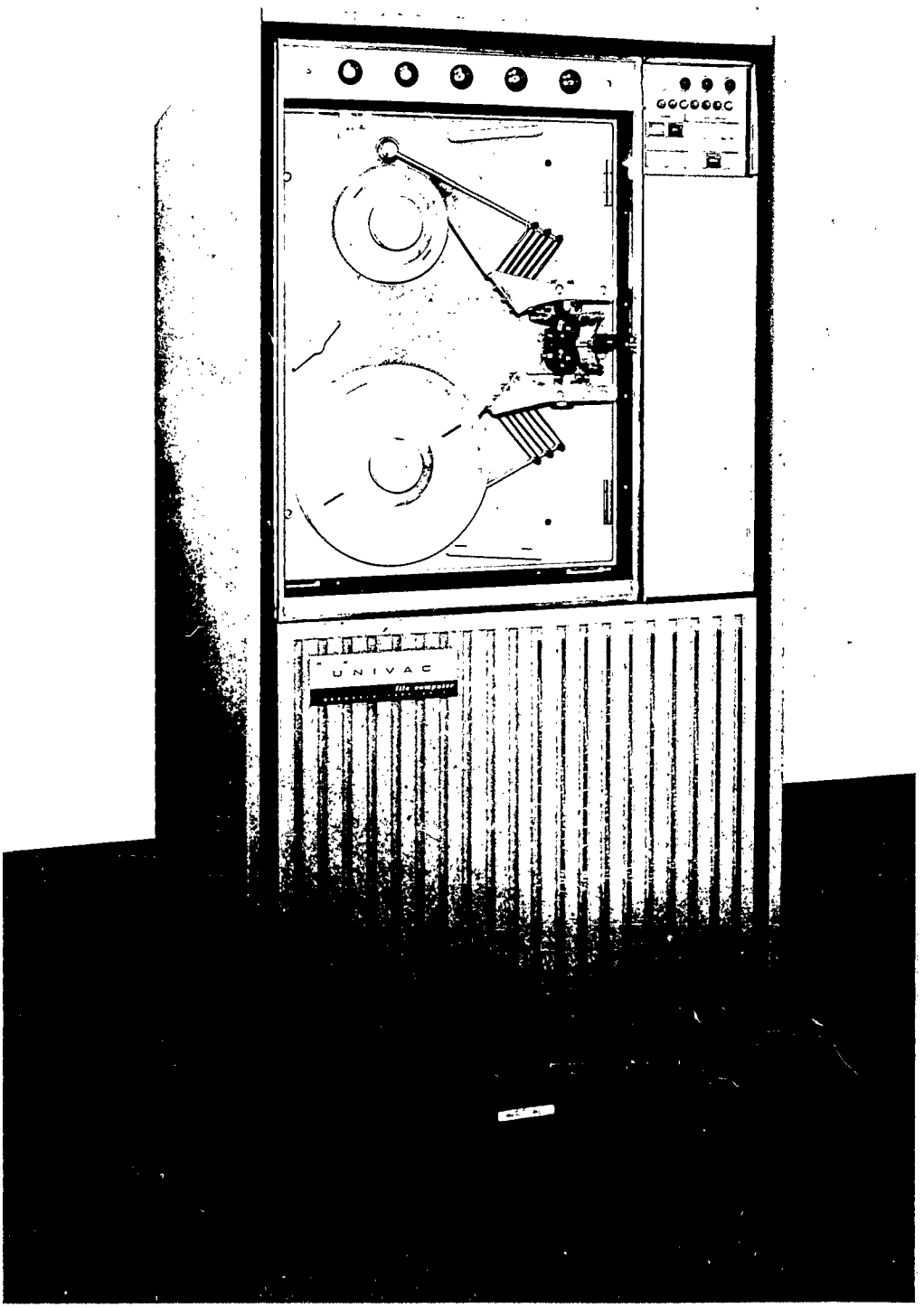

FIG. 13 MAGNETIC TAPE UNIT

5. Wire end of data on MTU-I to high-speed control line X.

6. Put demand station 5 on line.

7. If the general storage area containing the starting routine has not been destroyed:

   a. Place the address Ø11ØØØØ into the general storage address register (GSAR) and read out the record from general storage.

   b. Set the Program Address Counter (PAK) to 980, Operation Pulse/Enable Distribution (OED) to Ø and start.

8. If general storage has been destroyed since the last run, after 1 through 6, above:

   a. Type the following instructions on the supervisor's typewriter:

```
ØØØ - Ø5Ø   556  ΔΔΔ   DE5
ØØ1 - Ø5Ø   ØØ2  ØØ1   TD5
ØØ2 - 15Ø   556  ΔΔΔ   DE5
ØØ3 - Ø5Ø   ØØ3  Ø5Ø   TD5
```

   b. Track switch the typewriter.

   c. Set PAK to ØØØ, OED to Ø and start.

9. After 7b or 8c, above, the label from the tape will be printed on the typewriter in the following format and the program will stop: six characters of data (year, month, day); BRD; GS FROM MT; and the general storage parameters to be loaded from the magnetic tape.

10. Check the label for correct data and area, and if satisfactory, start. All of the general storage between the parameters in the label, including search control locations, will be loaded.

The complete Executive Routine is loaded onto the high-speed drum with all initialized switches and counters. A program stop

printout (13, 22, 28, 32, 38, 46 and 78 spaces, respectively, starting from the left margin as in Fig. 14). To save time in this eventuality, these tab stops, except for the first one, could be preset on the typewriter in the FLIDAP area at the start of the run. During normal operation, the two tab stops described under "Start of Run" should be set.

Depressing the start button will now cause a reprint on the typewriter of the last strip printed on the printer, if that strip was printed in error. Future strip printout will occur on the supervisor's typewriter. At any time after typewriter printout has started and it is desired to return to the strip printout on the printer, the typewriter should be made "not ready," I/O-C, HSCL W should be set, and then the typewriter should be restored to the ready condition. This will cause the next strip to be printed on the printer. After High-Speed Printer printout has started, the typewriter should again be placed in a "not ready" condition, HSCL W should be removed, HSCL X set, and the typewriter restored to a "ready" condition. The strips should now be replaced with the regular paper and the original tab stops should be reset. When this is done, the typewriter should again be made "not ready," the HSCL X removed, and the typewriter restored to a "ready" condition. It is now in its normal state for supervisory messages, and they will resume printing on this typewriter.

It has been found that the typewriter strip printout is not always desirable under certain conditions such as an out-of-paper or a minor error condition which may be corrected rapidly. In these cases, it would be more desirable to wait for the condition to be corrected and then continue using the printer. If the HSCL W from the typewriter is set before printing has started on the typewriter, printing will return to the printer; however, it is possible to lose the strip originally being formatted when the error condition was found. To correct for this possibility, and to allow easy resumption of strip printout on the printer without intermediate printout on the typewriter, the following manual program variation is provided:

Remain idle until the condition is corrected. When the printer is ready to start printing and has been cleared, put 771 in PAK, set OED to Ø, and depress the computer start. The condition set in the program for the typewriter printout will be initialized to the High-Speed Printer condition, and normal strip printout will resume on the printer with the strip whose formatting was interrupted by the

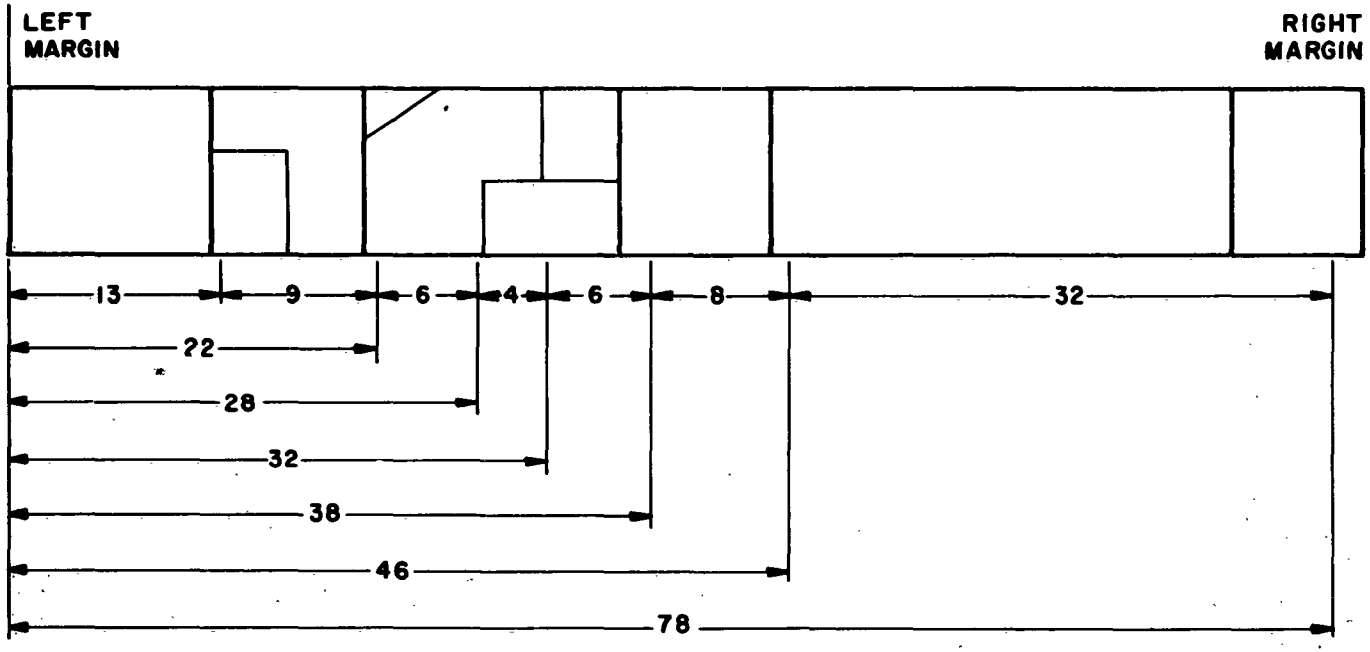

FIG. 14 TAB SETTINGS FOR STRIP PRINTOUT ON SUPERVISOR'S TYPEWRITER

error. If the outage was caused by machine errors, the last strip printed prior to the outage will be reprinted on the printer first.

High-Speed Printer Interruptions: Whenever a manual interruption of normal High-Speed Printer operation is necessary, check first for error light indication on the printer console (Fig. 15), which would mean that the last strip printed may have incorrect data or be incomplete. If there is such an indication, wait for the next strip or strips to be printed. The bad strip will be reprinted. When no error indication is present and the printer is idle, depress the "Normal Stop" first and then perform whatever operation is necessary. When the printer is again ready to resume printing, depress the "General Clear."

For removing a strip from the printer which is below the tear-off point, the sequence would be as follows:

1. Normal Stop.

2. Home Paper: Depress this button the number of times necessary to make the desired strip available for removal.

3. General Clear.

For major interruptions, put the printer's Test/Normal switch in the "Test" position. This takes the printer off line, and a program stop, as described above under "Program Stops," will occur when an attempt is made to print the next strip.

Typewriter Interruptions: Whenever it is desirable to interrupt printout on either of the typewriters (Fig. 16), the typewriter should be made "not ready," HSCL X should be set, and then the typewriter restored to a "ready" condition. For normal supervisory messages, this typewriter will be bypassed and the other typewriter will be advised that the typewriter is out. If the typewriter being interrupted is the FLIDAP typewriter, during a period when it is printing strips, the program will wait. The strips may then be removed, the paper changed, or whatever operation is required may be performed. When completed and ready to resume normal operation, the typewriter is again made "not ready," HSCL X is removed, and the typewriter restored to a "ready" condition. For major interruptions,

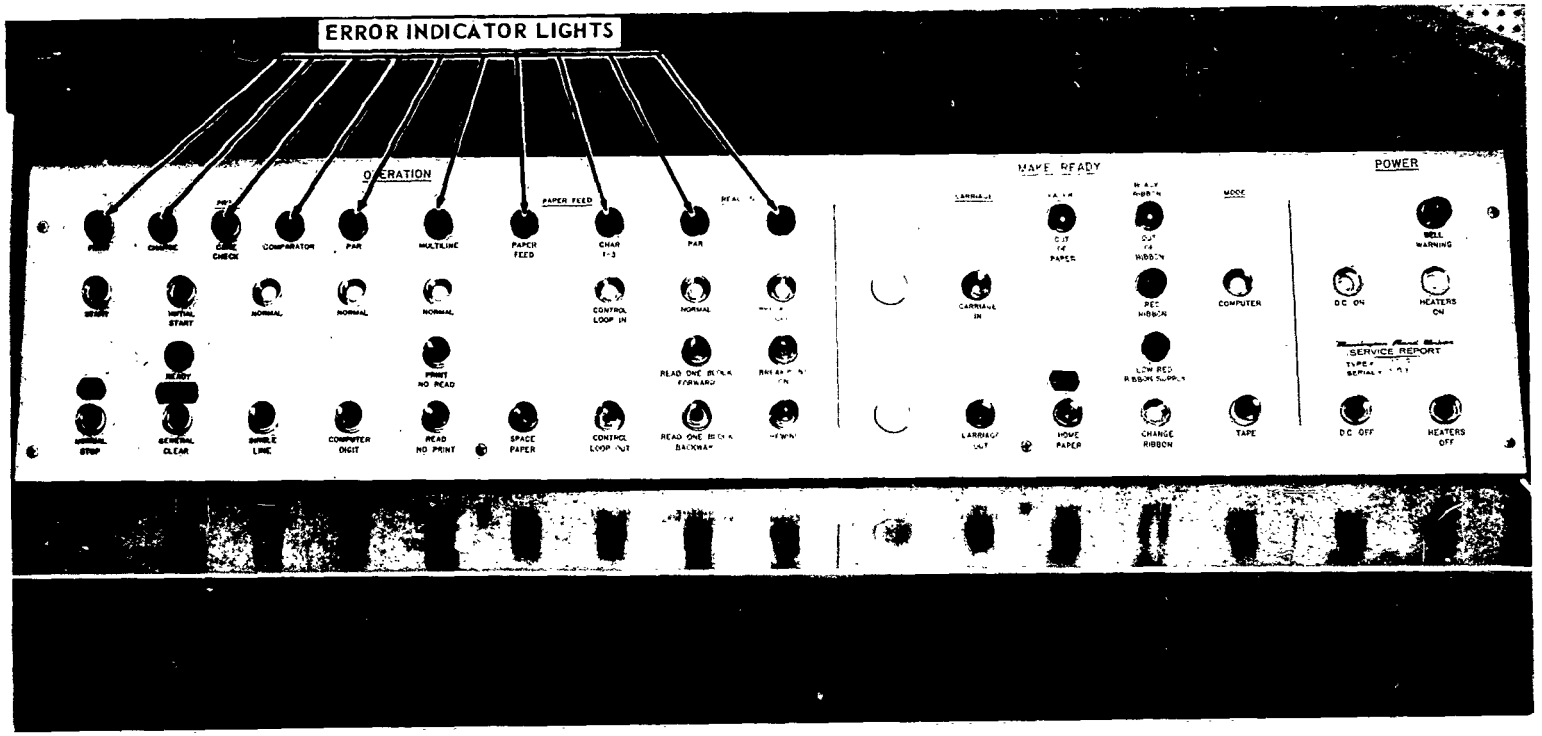

FIG. 15 HIGH-SPEED PRINTER CONSOLE

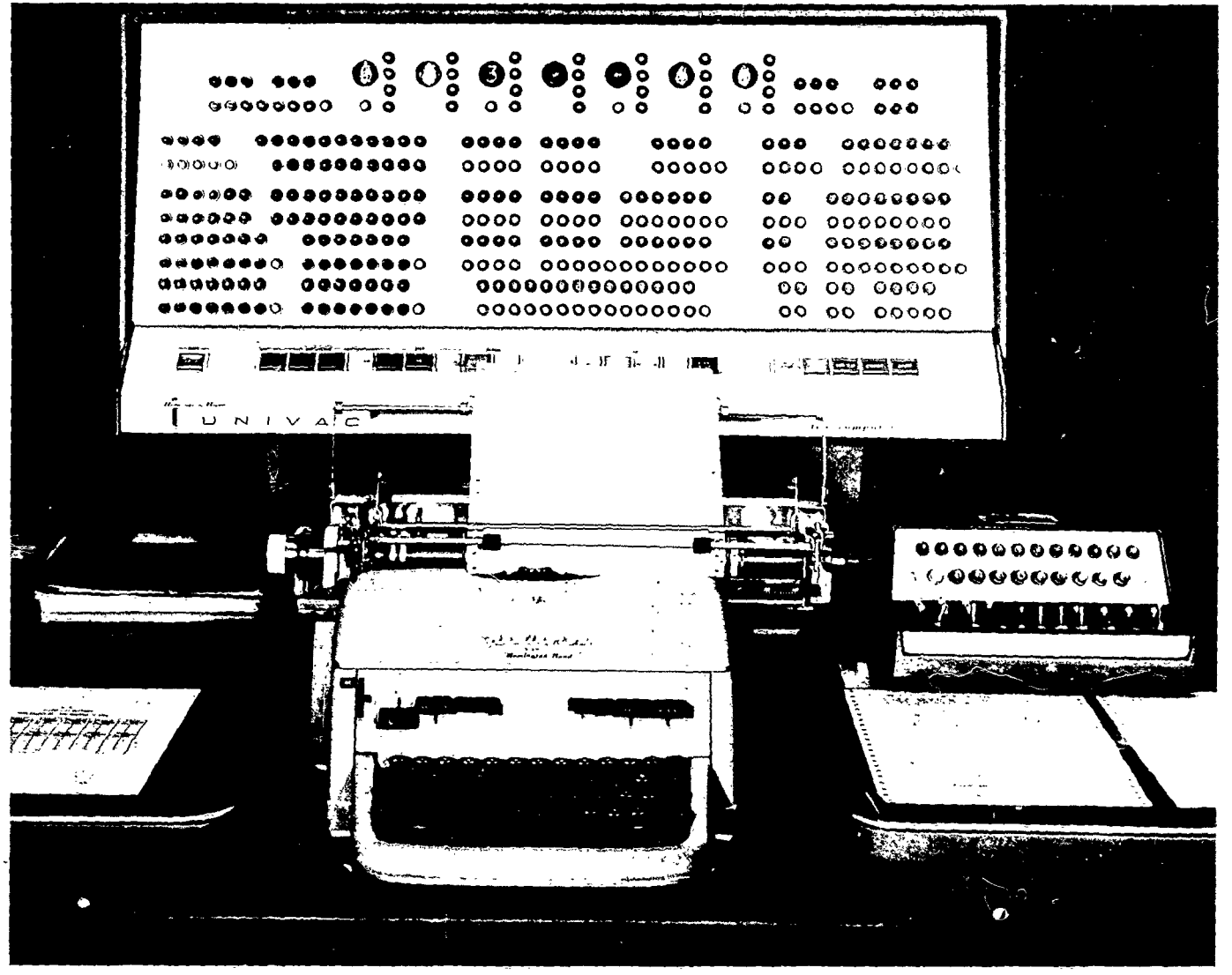

FIG. 16 SUPERVISOR'S CONSOLE AND INQUIRY TYPEWRITER

put the typewriter's Test/Normal switch in the "Test" position. This takes the typewriter off line.

Cautionary Note: Whenever both of the supervisory typewriters are interrupted at the same time, or if the computer room typewriter is interrupted while the FLIDAP typewriter is being used as a strip printer, a program stop will occur as described under "Program Stops," above, when the next attempt is made to send a supervisory message.

Ending a Run: As described in the "Ending Routine" and the "Executive Routine," if the program is allowed to run to the normal end of a day, it will enter the Ending Routine automatically at a predetermined time according to the clock. However, if it is desired to end a run completely, prior to this time, the operator would stop the computer, put up breakpoint 1 on the computer console, and then restart the computer. This will force the processing to the Ending Routine.

If it is desired to put all or a portion of general storage onto magnetic tape at this time, perform the following steps as soon as the message

MT DUMP
MOUNT TAPE
LABEL ON Ø

appears on the typewriter:

1. Put the magnetic tape to contain the general storage data on Magnetic Tape Unit I (MTU-I).

2. Put MTU-I on line.

3. Type the following label on supervisor's typewriter Ø:

ØØØ - ΔΔ 6 1 1 2 1 3 Δ B R D	Date (year, month, day).
ØØ1 - ΔG S F R O M Δ M T Δ	
ØØ2 - ΔΔΔΔ Ø Ø Ø Ø Ø Ø Ø Δ	First general storage blockette to be dumped.
ØØ3 - ΔΔΔΔ Ø 1 4 9 9 8 Ø Δ	Last general storage blockette to be dumped.

ØØ4 - r r|Δ Δ Δ Δ Δ Δ Δ Δ Δ Typewriter carriage returns and terminate print and clear.

4. Track switch the typewriter and start.

The program-generated tables in general storage are initalized to spaces where necessary. A blockette of bootstrap steps is first put on the tape, followed by the above label and two tracks of the Starting Routine. The complete general storage area between the parameters in the label, including search control locations, is then put onto the magnetic tape. Each blockette of data from general storage is preceded by a blockette containing the general storage address of the data. End-of-data codes (%) are added to the tape at the end. The tape is rewound and "MT DUMP COMPLETED" is typed on the typewriter.

Supervisory Messages

Input Message Received: Figure 17 depicts the various forms of a supervisory message indicating that a message has been received by the central computer and is being processed. The supervisory message consists of the time, the addressor, the kind of message, and the aircraft indentification. On the last line is the number of input messages received.

Figure 17A depicts an E kind of message received from another center (2ZNY). Figure 17B depicts a D kind of message received from the local FLIDAP Area. KH51 is the operator's initials and the minutes of time. Figure 17C depicts a P kind of message from a CUE unit at a sector (Ø4 is the sector number). Figure 17D depicts an input message containing more than 24 characters of remarks. In this case, all of the remarks are printed with the supervisory message so that the supervisor may determine distribution. The strips can contain only 24 of the characters of remarks.

These messages are all printed in black with one exception: the work "Remarks" and the remarks will be in red.

Processing Completed: Figure 18 illustrates various forms of a supervisory message indicating that the processing of a flight plan is completed (that is, all strips necessary have been printed), and that an intercenter message, where necessary, is being sent.

A.

B.

C.

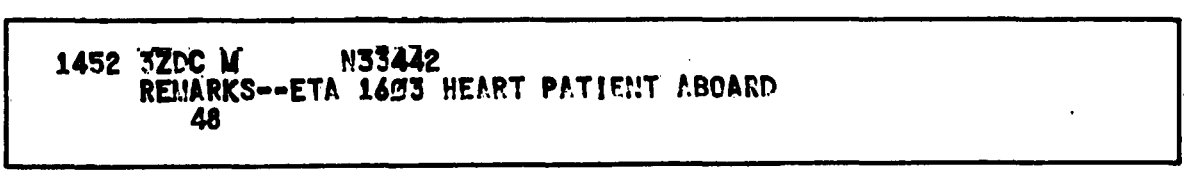

D.

FIG. 17 SUPERVISORY MESSAGE - INPUT MESSAGE RECEIVED

The supervisory message consists of the time and the aircraft identification. The remaining portions vary according to the flight. All of these messages are printed in black.

Figure 18A depicts the message when an intercenter message is being sent to another center (3ZDC). Included with this message is the coordination point (1ØNWENO, 10 miles northwest of Kenton).

Figure 18B depicts a flight landing (LNDG) at an airport (SBY) within the center's area. LNDG is replaced with ACM, if an approach control message should be sent manually or is being sent automatically from the computer (not included in the master operational program) to an approach control facility.

Figure 18C depicts a flight progressing through this center's area and entering another center's area which is not computer-equipped. The last fix in this center's area (HNK) is included.

Operator Errors: Figure 19 illustrates the supervisory messages resulting from errors which are detected by the input Translate and Format (T&F) unit or by the central computer, and which may usually be attributed to the input operator. These messages are printed in red.

Figure 19A depicts the supervisory message resulting from an operator error detected by the input T&F unit. It consists of the time, the code OE (operator error), "IN" to indicate an input, the addressor, the kind of message, the aircraft identification, and the time included in the input message.

Figure 19B depicts an error detected by the central computer. This indication always follows directly after the input supervisory message for the flight containing the error, and does not require that the identification be repeated. It consists of the code OE, a code to depict the type of error, DUP (duplicate message on an "N" kind of message) or CDR (improper kind of message), and the time contained in the message.

Machine Error: Figure 20 illustrates the supervisory messages resulting from the various possible machine malfunctions which may be encountered during normal processing. Each message contains the code ME (machine error) and an indication of the

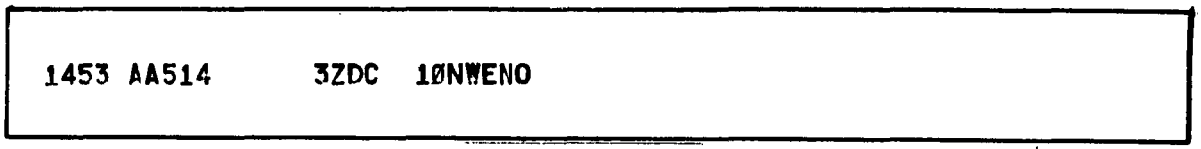

A.

B.

C.

FIG. 18 SUPERVISORY MESSAGES - PROCESSING COMPLETED

A.

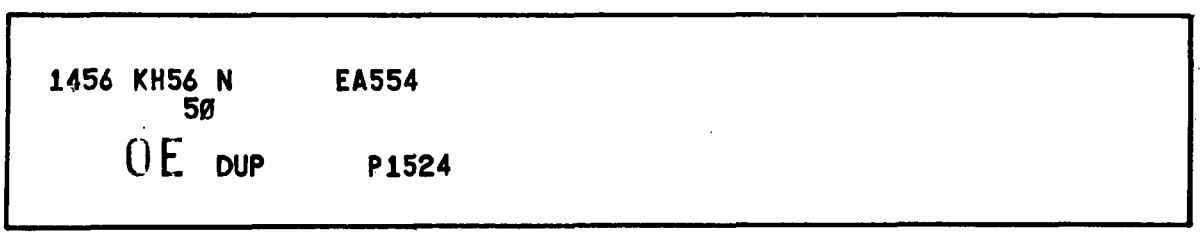

B.

FIG. 19 SUPERVISORY MESSAGES - OPERATOR ERRORS

equipment effected: IN (input T&F), OUT or ICM (output T&F), HSP (High-Speed Printer) or UFC (central computer).

Figure 20A depicts a machine error in the input T&F unit (ME IN). It contains the time, addressor, kind of message, aircraft identification, and the time included in the input message. Everything except the time is printed in red.

Figure 20B depicts a single machine error in the output T&F unit. An attempt is being made by the computer to resend the message, which caused the error condition.

Figure 20C also depicts a machine error in the output T&F unit (ICME). This message is sent when the second attempt to send an intercenter message again fails because of a machine error. In this case, both tracks of the intercenter message are printed out and each is followed by the code ICME. The first track contains the coordination fix, departure point, and route of flight. The second track contains the addressee, up to 36 characters of remarks, altitude, speed, estimated time at the coordination fix, type of aircraft, aircraft identification, addressor, and kind of message. In this supervisory message, everything is printed in black except the code ICME, which is in red.

Figure 20D depicts that the output T&F unit is out of operation (has been made "not ready" after the above output errors indicate that it is not working properly), and this message will result whenever an attempt is made to send an ICM during the outage. This supervisory message will be printed in red.

Figure 20E depicts a machine error in the High-Speed Printer (ME HSP), and indicates that the machine error interrupted the printing of a strip. This strip was voided and an attempt is being made to reprint it. The current time is printed in black and the remaining portion is in red.

Figure 20F indicates that the second attempt to print the strip failed and the printer is out of operation. Future strip printout will continue on the FLIDAP supervisor's typewriter (PO ON 1), if desired.

Figures 20G, 20H, and 20I depict a machine error in the computer (ME UFC), and contain the current time and the kind of error; PAR (parity), ATH (arithmetic), TMO (time out) or GSP (general storage program); the contents of the general storage address register (GSAR); the contents of the Program Address Counter (PAK); and the contents of the Instruction Revolver (IRV). These messages are printed in red except for the current time. The data on the second line vary according to the area of processing which was interrupted by the error. Where possible, the second line will contain the aircraft identification of the flight whose processing was interrupted, as in Fig. 20G. In some cases, the point of departure will be included. If a second computer machine error should occur during the attempt to recover from a previous machine error, but before the new processing of the message has started the words "2nd ME" will be included on the second line as in Fig. 20H. The data in the message will be that pertaining to the area of the first machine error. If the processing interrupted was in the portion of the Position Report Routine which does not allow recovery, the contraction "PSN RPRT" appears on the second line following the aircraft identification. If the processing interrupted does not pertain to a particular flight, a word will be placed on the second line to indicate the area concerned, as in Fig. 20I. These words are as follows:

"SEARCH" - The portion of the Executive Routine which brings in a new message from the input T&F unit.

"ENDING" - The Ending Routine.

"ERASE" - The portion of the Cancellation and Erase Routine when data are no longer needed and are being erased from storage.

"CUE" - The CUE Routine.

"ERROR" - The error portion of the Executive Routine.

Data Errors: Figure 21 illustrates the various forms of supervisory messages resulting when an error is detected which is probably attributable to an error in the data to be processed. Each of these supervisory messages, except that resulting from

```
1458 ME  IN      2ZNY E      PA5Ø      E152Ø
```

A.

```
     ONE ICME
```

B.

```
ENO MDT ENOV16 DCAV8 PITV37 ERIV14 SYRD MDT
ICME
2ZDC      5ØNM RADIUS SYR ETA SYR 183ØZ      Ø1ØØ  Ø185      E16Ø3
C54       A6Ø747      ZAC E
ICME
```

C.

```
ME OUT
```

D.

FIG. 20 SUPERVISORY MESSAGES - MACHINE ERRORS

```
1507 ME  HSP
```

E.

```
1510 HSP OUT. ME
     PO ON 1
```

F.

```
1512 ME  UFC PAR GSAR-0000340-PAK 535 IRV  98B   945AT5
         A99876
```

G.

```
1515 ME  UFC TMO GSAR-5063580-PAK 444 IRV  975477991MK5
     2ND  ME  IDL EA659
```

H.

```
1518 ME  UFC ATH GSAR-1122000-PAK 331 IRV  132129995ADL
     SEARCH
```

I.

FIG. 20 SUPERVISORY MESSAGES - MACHINE ERRORS

a No Continuation Message (NOX) error shown in Fig. 21E, will be printed out immediately after the input supervisory message for the flight affected by the error, as shown in Figs. 21A, 21B, 21C, and 21D, therefore, it is not necessary to repeat the identification. All of the data error supervisory messages are printed in red.

Figure 21A depicts a data error encountered during the route processing of a flight plan. Immediately following the Data Error Code (DE), another three-digit code is described in detail in the error subroutine portion of the Executive Routine. These would be: "NF3" (no-find in Table 3), "NFE" (no-find entry fix), "DSE" (direct-segment error), "EOJ" (entry or junction error), "RDD" (relative distance and direction error), "RTE" (rho-theta error), "LAT" (latitude error), "LON" (longitude error), "NFJ" (no-find junction), and "NFX" (no-find X coordinate). Following this code is the time from the input message and the two segments of the route of flight being processed at the time of the error.

Figure 21B depicts the supervisory message which results when an R kind of message requests data on a flight at a fix over which the aircraft does not fly. "NF7" (no-find in Table 7) and the fix involved are printed out.

Figure 21C depicts the supervisory message which results when an R kind of message requests data on a flight which is not in Table 1. "NF1" (no-find in Table 1) is then printed.

Figure 21D depicts the supervisory message which results when an X kind of message is entered for which there is no corresponding parent message for this flight.

Figure 21E depicts the supervisory message resulting when the predetermined time has passed without a required X kind of message being received. "NOX" (no X), the addressor of the parent message, and the aircraft identification are printed.

Program Errors: Figure 22 illustrates the various forms of supervisory messages resulting from an error which is caused by a programming error. These are all the result of a storage area becoming full. In all cases, this supervisory message will be printed immediately following the input supervisory message for the flight affected by the error; therefore, no identification is necessary. These will all be printed in red. Following "PE"

```
152Ø 2ZNY E      V1244
       51
     DE NF3      E1534 CYNV531 ACYV5Ø3 SB
```

A.

```
1521 Ø3  R       EA22
       52
     DE NF7 FIX ACY
```

B.

```
1524 Ø4  R       GACCK
       53
     DE NF1
```

C.

```
1526 3ZDC X      A66432
       54
     DE NOE
```

D.

```
153Ø          DE NOX 2ZNY A98765
```

E.

FIG. 21 SUPERVISORY MESSAGES - DATA ERRORS

(program error), a three-character code depicting the table which is full is printed as follows: TIF (Table 1 full), T7F (Table 7 full), XXF (Continuation Index full), XTF (Continuation Table full), and RTF (Remarks Table full). In the case of Table 1 being full, the time from the input message is printed as in Fig. 22A. In the case of the Table 7 being full, the time from the input message, the fix concerned, and its Table 7 start address are printed as in Fig. 22B.

In the case of the Remarks Table being full, the supervisor must be given the full remarks, as the processing of this flight will continue but without remarks. If the remarks were more than 24 characters, they already would have been printed with the input supervisory message, and need not be repeated (Fig. 22F). If they are not more than 24 characters, they are printed with the error supervisory message (Fig. 22E).

Miscellaneous Supervisory Messages: Figure 23A depicts the supervisory message resulting from one of the supervisory typewriters being out. The other typewriter will continue receiving supervisory messages, but each message will be followed by the message "Ø OUT" (the supervisory typewriter in the computer room is out) or "1 OUT." (The supervisory typewriter in the FLIDAP area is out.) This message is printed in red.

Figure 23B indicates that the High-Speed Printer is out of operation because it is out of paper or red ribbon, or it is not on line with the computer. If desired, future strip printout will take place on the FLIDAP area supervisory typewriter. Except for the time, this is printed in red.

Figure 23C indicates that the previously out High-Speed Printer is now in operation and strip printout will resume on the printer. Except for the time, this is printed in red.

CUE Errors: Figure 24 illustrates the supervisory messages which result from errors detected during CUE processing. Except for the time, these are all printed in red.

Figure 24A depicts a message resulting from some incorrect data having been entered by the controller from CUE. These errors may be: "INVALID FLIGHT NUMBER INPUT," to indicate that the flight number entered was an odd number or an unused number; "INVALID FIX DATA ON INPUT," to indicate that the fix entered is actually not on the route of this flight; "INVALID KIND FROM

```
1532 KH32 N       EA98
       55
    PE  T1F       P155Ø
```

A.

```
1534 2ZDC E       V1234
       56
    PE  T7F       E1545 ACY 5Ø6ØØ6Ø
```

B.

```
1536 3ZNY X       A44632
       57
    PE  XXF
```

C.

```
154Ø KH39 X       V44321
       58
    PE  XTF
```

D.

```
1541 2ZNY E       N11334
       59
    PE  RTF-ETA 1645
```

E.

```
1544 KH44 N       A11199
     REMARKS--ORBIT 5ØNM ACY 1+3Ø ETA ACY 1615
       6Ø
    PE  RTF-
```

F.

FIG. 22 SUPERVISORY MESSAGES - PROGRAM ERRORS

CUE," to indicate that the kind of message is an invalid character; "INVALID TIME FROM CUE," to indicate that the time entered was greater than 2359 or contained an invalid character; or "DUPLICATE FIX POSTINGS," to indicate that the message contains a fix over which this flight passes more than once, so that the computer does not know which is referred to in the message.

Figure 24B depicts the supervisory message which results if the controllers do not pick up the alert messages from the computer and the Alert Table storage area becomes full.

Figure 24C depicts the supervisory message resulting from an error encountered in an attempt to send a message to a CUE unit. "ERROR ON OUTPUT MESSAGE" indicates that the output message contained a parity error or an alpha character. "INACTIVE ADDRESS MESSAGE" indicates that an attempt was made to send the message to a sector without an active CUE unit.

Figure 24D depicts the supervisory message resulting from a false alert being sent to a sector when actually there is no output message for that sector.

Ending Message: Figure 25 illustrates the ending message described in detail in the ending routine. This message is printed in red except for the current time.

DETAILED NARRATIVES

The detailed narratives provide descriptions of the processing routines and plugboard programs to be used in conjunction with the detailed flow charts and wiring charts. Included in this section are descriptions and diagrams of the data tables, both constant and computer constructed.

Starting Routine (Appendix III)

The Starting Routine is used at the beginning of a day's run to initialized storage locations with data from a master magnetic tape. This tape may be produced at any desired time usually after changes have been made in general storage. (See Ending Routine.) This tape contains all of general storage or any portion desired including search control locations. Use of this routine insures that storage areas will contain the proper data at the start

```
1544 N38877        ACM        ACY
  OUT
```

A.

```
1545 HSP OUT - PAPER
     PO ON 1
```

B.

```
1550 HSP PO RESUMED
```

C.

FIG. 23 MISCELLANEOUS SUPERVISORY MESSAGES

```
1550 CUE  INVALID FLIGHT NUMBER INPUT
SECTOR NUMBER 03  KIND P  CFN 001  FIX     ENO  TIME 1552  ALT 0200
```

A.

```
1554 CUE  ALERT TABLE FULL     MESSAGE
SECTOR NUMBER 04  KIND ↓  CFN 070  FIX 00NWACY  TIME 1548  ALT 0110
```

B.

```
1556 CUE  ERROR ON OUTPUT      MESSAGE
SECTOR NUMBER 02  KIND C  CFN 066  FIX     CYN  TIME 1555  ALT
```

C.

```
1558 CUE  NO MESSAGE FOR REQUEST       SECTOR NUMBER 02
```

D.

FIG. 24 SUPERVISORY MESSAGES - CUE ERRORS

```
1600 END)

MSGS RCVD
     ZNY          145
     ZDC           98
     CUE         1003
     LOCAL        187
TOTAL            1433

MSGS VOIDED        18

FLT PLNS
     RCVD          405
     CMPLTD        403

MSGS XMTD
     ZNY          126
     ZDC          114
ICM               240
     CUE         1220

STRIPS PRINTED   2835

ERRORS

ME
     COMP           3
     HSP            2
     IN            14
     OUT            9
     CUE           22
TOTAL              50

OE
     CUE           45
     IN            32
TOTAL              77

PE                  3

DE                 46

MT DUMP
     MOUNT TAPE
     LABLE ON 0
```

FIG. 25 ENDING MESSAGE

of a run regardless of operations or conditions which may have taken place between runs, such as mechanical or electrical difficulties, or maintenance procedures which may have destroyed portions of storage.

After the general storage area is loaded, the field patterns for initial processing are brought out of storage and placed in all three of the pattern tracks. The complete Executive Routine, including all factor storage locations, is brought out of storage and placed on the high-speed drum.

A message is then sent to the supervisor's typewriters showing the time and the word "Start." The clock readout portion of the Executive Routine is entered to start the iteration which updates the data from the Clock Table to equal the time on the clock. (See Clock Readout and Executive Routine documentation.) As explained in the Executive Routine documentation, no tests will be made of the Input Paper Tape System or of the controller updating equipment until the proper Clock Table record for the present clock time is obtained. At that point, the normal input iteration in the Executive Routine is entered and processing starts.

It is not necessary that the starting routine be in general storage in order to run this program. As explained in operating instructions, a bootstrap routine may be used to load the Starting Routine from tape to the high-speed drum, and the Starting Routine would then continue as if it had been brought from general storage.

If it is not considered necessary or desirable to reload general storage from magnetic tape, an alternate starting routine is available. This routine assumes that all program and table areas in general storage are normal except that there may be extraneous data in some of the program-generated table areas. This routine will completely clear the following tables in general storage to space: Fix Data Table (Table 7), Clock Readout Table (Table 9), Remarks Table (Table 15), Continuation Table (Table 14), Continuation Index Table (Table 16), Flight Identification Table (Table 1), CUE Alert Table (Table 25), CUE Output Message Table (Table 26), and the CUE Speed Table. After this, the field patterns for initial processing and all of the Executive Routine are brought out of storage. Processing then continues as described above, following the description of loading of general storage from the magnetic tape.

Executive Routine (Appendix IV)

Primarily, the Executive Routine is an iterative loop within which it is looking for work to be performed. When a message is received, or it is determined that it is time to perform a processing function, the Executive Routine will determine which processing is required. It will then direct the logic flow to the proper processing routine. Within this iteration, there are three major areas from which processing may be required. These are as follows, in order of precedence:

1. A message is received from the controller updating equipment (CUE).

2. A predetermined amount of time has passed since partially completed data were stored for future processing, and it is now time to perform this processing.

3. A message is received from the input Translate and Format Unit (T&FU) (see Fig. 26).

Included within the Executive Routine are factor storage areas which are updated regularly throughout a program run and which should not be initialized or overwritten. These would be message and error counters, certain updated addresses, and so forth. Several subroutines common to different processing routines are also contained within the general title "Executive Routine."

CUE Message Test: The Executive Routine does not actually test for a CUE message. It does go into the CUE Routine and there a test is made of the CUE input. Messages from CUE input are processed, and CUE input is again tested until no further messages are waiting. At that time, the logic flow returns to the Executive Routine input iteration to test for time to process stored data.

Searching the Continuation Message Index Table: There are two areas into which data are stored for future processing. The first to be considered is called the Continuation Message Index Table (Table 16). This table is built and stored in general storage when a message is received with a route of flight too long for the original message (more than seven segments). This

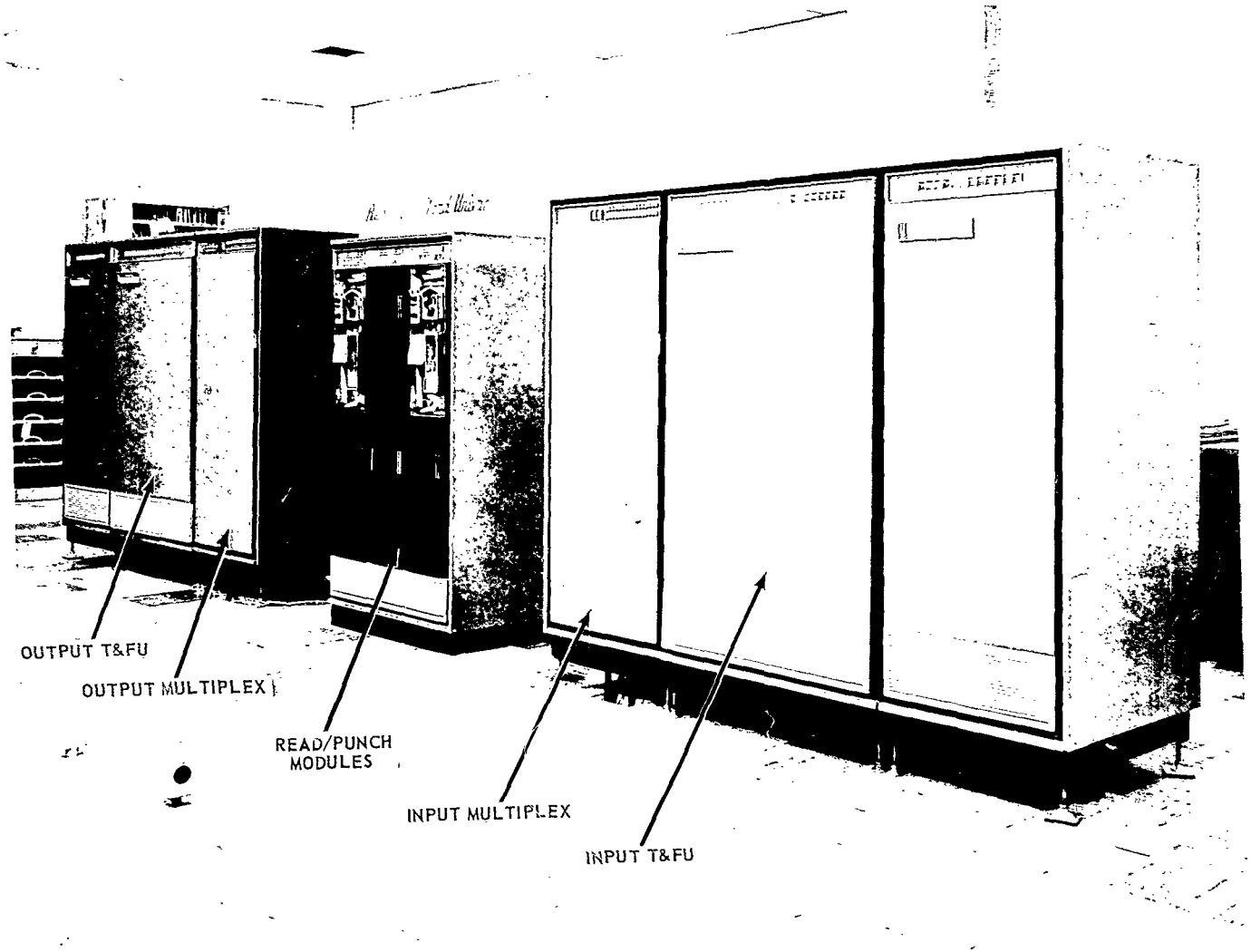

FIG. 26 HIGH-SPEED PAPER TAPE SYSTEM

condition requires a second message, continuation message (X kind) containing the remaining segments of route. An X message for a flight plan should be received as the next message on the same input unit following the original message (see AT 200-12). (This would not necessarily be the next message into the computer, as several input units would be multiplexed into a common computer input demand station.) It is therefore expected that this message will be received by the computer within seconds or minutes after its original message. If it is not received within a predetermined maximum number of minutes, an error is considered to exist. When the Continuation Message Index Table was constructed, this maximum unit of time (in this case, 4 minutes) was added to the time that the original message was received, and the resulting time, in minutes, was stored in the Continuation Message Index record.

The Executive Routine searches the Continuation Message Index Table for any records which may be stored in it. The time in minutes, stored in each record found, is compared with the clock time converted to minutes. If the clock time is greater than the time of the record, then at least 4 minutes have passed since the original message was stored. If the proper X kind of message for this flight plan had been received, this record would have been erased. (See Continuation Routine.) Since it was remaining after 4 minutes, it is assumed that the X message was not received or was rejected because of an error and the supervisor must be notified. The addressor of the original message and the aircraft identification are taken from the Continuation Message Index record and sent to the supervisor's typewriter with the proper error notations. Ten more minutes are added to the time in the record, and a flag character is inserted in place of the addressor. This record is then restored into its original position in the Continuation Message Index Table. This allows time for the supervisor to have the X message re-entered properly. If this record is still found in the Continuation Message Index Table at the end of the 10-minute period, the flag character in the record indicates that the supervisor has already been notified, and this record is erased from the table. Another table, called the Continuation Table (Table 14), is also erased at this time.

The 4-minute and 10-minute time increments may be varied to meet operational requirements. Also, the records may be left intact, in which case the X message may be entered at some later time. This does not seem practical; however, it is desirable to keep the Continuation Message Index Table as short as possible.

Whenever this portion of the Executive Routine is entered, all records within the Continuation Message Index Table are checked; therefore, this table is not required to be checked more than once a minute. To prevent more frequent checks, the clock time is stored in a factor storage location when this portion of the routine is entered. Just prior to entering this portion of the routine in the next iteration, the stored time is compared with the clock time. As long as they are equal, the search of this table is bypassed.

Searching the Clock Readout Table: The second area into which data are stored for future processing is the Clock Readout Table (Table 9). The records are built and stored into this table in other processing routines when it is determined that the next processing required on a flight plan should be deferred to a later time. Each record stored is one word long and contains the three high-order characters of a time, in minutes, the three characters of the computer flight number, and the low-order five characters of the flight data record (Table 7) general storage address for the fix concerned, or five pad characters (dots).

Three conditions are represented by data found in the Clock Readout Table:

1. The estimated time of arrival over a fix was computed and it was found to be too early to print out the strip for this fix. (See Time Computation Routine.)

2. The last strip was printed out and an intercenter message must be sent to an adjoining center's computer, but it is too early to send the message. (See Printout Routine.)

3. The last strip was printed out and all of the stored data on this flight should be erased at a future time. (See Printout Routine.)

The factor used in the Time Computation and Printout Routines, to determine if it is time for printout of a strip or for the sending of an intercenter message, is the same factor used to search the Clock Readout Table for data. This factor is the high-order three characters of the current clock time, converted to minutes, plus 30 minutes. This factor is used so as to cause action to occur 30 minutes prior to the time stored in a Clock Readout Table record. To maintain the relative value difference between all times used in

the program, including this time factor, 2400 is added to any time between ØØØØ Greenwich and Ø959 Greenwich before conversion to minutes; ØØØ2 will then represent an actual greater value, and therefore a later time, than 2358.

In the Time Computation Routine, the computed estimated time over a fix is compared with this factor. If the computed time is less than or equal to the factor, then the computed time is less than or just 30 minutes from the present clock time. If this condition exists, it is time to print. No Clock Readout record is stored or built for this strip. However, if the computed time is greater than the factor, then the computed time is more than 30 minutes from the present time, and processing may stop on this flight until a time 30 minutes prior to the computed time. To accomplish this, a Clock Readout Table is generated and stored. In this case, the low-order five characters of this Fix Data Table's (Table 7) general storage address are stored with the three digits of time and the computer flight number.

In the Printout Routine, a test is made to determine if it is time to send an intercenter message on this flight. If not, a record similar to that just described is stored in the Clock Readout Table. Also, in the Printout Routine, when it is determined that the last strip on a flight has been printed, 60 minutes is added to the estimated time over the last fix, and the high-order three characters of this new time, with the computer flight number, are stored in the Clock Readout Table. Five dots are placed in the area normally occupied by the five digits of the Table 7 address. With this adjusted time in the record, it can be seen that, in the search of the Clock Readout Table, this record will be found 30 minutes after the estimated time over the last fix. Using the dots as an erase flag, this record will then be used to cause erasure of all stored data on this flight.

Starting at the beginning of the Clock Readout Table, a search is made for any stored record with a time equal to the three-digit time factor previously described. When one is found, the record area in the Clock Readout Table is erased and the address where it was found is stored in what is called the "Table 9 interrupted address factor storage," so that on subsequent searches of this table, the search may be started at this point, with the same time factor, until the entire table has been searched. Disposition of the found record is now determined by first checking

for the five dots in the place of the five characters of a Table 7 address. If the dots are present, then it is time to erase this flight's data,and logic flows to the Cancellation Routine, where this is accomplished. If the dots are not present, then the flight data necessary for strip printout or intercenter message is brought out of storage. This includes the Fix Data Table (Table 7) for this fix, the Flight Identification Table (Table 1), and the Flight Data Table (Table 2) for this flight. A test is now made of Table 7 to determine if this strip has already been printed. If not, logic flow is directed to the Tailoring and Printout Routines to remove the route segments no longer needed, printout the strip, and continue necessary processing of this flight. If the strip has been printed and an intercenter message is necessary, the logic goes to the Tailoring and Intercenter Message Routines to remove completed route segments and send an intercenter message.

The time factor used in the tests for time for action in the Time Computation and Printout Routines, and in the search of the Clock Readout Table, was obtained from another table called the Clock Table (Table 12). Each record of this Clock Table contains six usable characters: the three characters of time converted to minutes, plus 30 minutes, previously described, and three high-order characters of Greenwich mean time as used within the center.

After determining that a complete search of Table 9 has been accomplished with a given time factor, the actual clock time is compared with the three characters of Greenwich time associated with the time factor. If they are equal, it means that the actual time has not progressed sufficiently to require a new check of Table 9. If they are unequal, it means that the actual time has progressed to the next 10-minute increment, or beyond, and the next record from the Clock Table is brought out to the factor storage location so that a search will be accomplished with the next succeeding time factor. As can be seen, a minor iteration is entered here, with Table 9 being searched completely with each possible time factor in succession until the actual time and the Greenwich time in the factor storage are equal.

The Clock Table for this routine is set up for the normal 16-hour operating period of a center in the eastern time zone, 1300 Greenwich to 0500 Greenwich, and the assumption is made that computer processing would be stopped at 0430 Greenwich, at the latest. These times are changeable to suit operational requirements. The 30-minute advance readout is also changeable.

The use of the time converted to minutes, rather than in hours and minutes, was decided upon to eliminate checks for change of hour with each time computation during normal processing. The only checks for change of hour or day are accomplished in the original conversion of time to minutes in the Executive Routine and its reconversion to hours and minutes in the Tailoring Routine for printout or intercenter message. To eliminate checks for change of day with each time adjustment, the original time on an input message and the time factor from the Clock Table have an added factor of 2400, before conversion to minutes, if the time was between 0000 and 0959, inclusive.

At the end of the Clock Table after the record used for the 0430 Greenwich time period, one high-order digit of a time factor is in each record. These include each of the three possible digits that could be in that location during the day's run. Using these time factors and three digits, which cannot compare equally to any Greenwich time, causes everything remaining in the Clock Readout Table to be brought out and processed. (See Ending Routine.) Any new messages entered during this time would be processed completely. After each complete search of the Clock Readout Table, a check is made to determine if the last time factor in the Clock Table has been used. If so, the Ending Routine is started.

As long as data are found in the Clock Readout Table, the interrupted address will always be greater than the start address. This is ensured, even if data are found at the start address, by the addition of a character in one of the normally unused high-order four-character positions of the interrupted address factor storage. If the table has been searched completely with the time factor previously mentioned, the Clock Readout Table start address is put into the interrupted address factor storage location. This is used, when returning to this portion of the routine, to determine if a search of the table has been completed with the current time. If not, the search is continued, but if it was completed, a test is then made to determine if the clock has progressed into the next 10-minute increment, thus requiring another search with the new time. If not, the next area of the input iteration is entered.

Messages Received from the Input Translate and Format Unit (T&FU): The third portion of the input iteration tests for a new message ready for entry from the input T&FU. If no message is available, then the CUE Routine is entered, thus completing the input loop and starting the next iteration.

A message received into the system from the input T&FU may have been initiated from any of the Synchrotape typewriters or FLIDEN's within the center's FLIDAP area, or it may have been received via teletype from an adjoining center's computer. In either case, they will arrive at the same input demand station and will therefore be on the same input track.

Each input/output track in the Univac File Computer is actually two tracks, one of which is available to the computer for processing and the other available to the Input/Output (I/O) unit. These tracks may be switched (reversed) either from the computer processing or on signal from the I/O unit.

Normally, an input message consists of two tracks of data. One track contains what might be called "flight data" (kind of message, aircraft identification, type of aircraft, speed, and so forth, and the other track contains the route of flight. When the message is received into the computer, the T&FU places the flight data on one side of the I/O track, track switches, and puts the route on the other side. If, however, there are remarks included in this message, the I/O tracks are again switched by the T&FU and the remarks are added to the flight data. (See Input T&FU Plugboard, Appendix XX.)

The first thing to be determined upon receiving a message into the computer is to determine if some special condition, such as remarks, exists within this message. If a special condition does exist, the T&FU will send a signal to the computer via Input/Output to Computer (I/O-C) high-speed control lines (HSCL). By testing each of these lines, the computer can determine which condition or conditions exist.

A test is first made to determine if any of the HSCL's are set. If not, the computer track switches the I/O track so as to make the route the first part of the message received. If one or more of the HSCL's are set, the possibility exists that this message contains remarks. This would mean that the route may be already on the computer side of the track because of the extra track switch initiated by the T&FU in placing the remarks with the flight data; therefore, the computer does not track switch the I/O track.

The first HSCL tested, when it is determined that one or more are set, is HSCL W, which would mean that the operator added a code to void the message because of some error. If

HSCL W is set, nothing more is required and another message is requested to be read in, overwriting the voided message. A count is kept of the number of voided messages received and each one is checked to see if an input machine error (HSCL Z) also exists. If so, a count is kept of these.

If this message was not voided, a check is made for an input machine error (HSCL Z) caused by a parity error in the input unit. If so, a count is kept of the number of these errors. Then a check is made for an operator error (HSCL X) caused by improper fields, invalid characters, wrong kind of message, and so forth. If so, a count is kept of the number of these errors. If either input machine error or operator error exists, a message is sent to the supervisory typewriters showing the kind of error, the aircraft identification, the kind of message, the addressor of the message, and the time on this message. A count is also added to a message-received counter.

If none of the above HSCL's were detected, then HSCL Y is all that remains, which indicates that the message contains remarks. The route portion of the message is available to the computer without further track switch, and processing may continue.

When no HSCL's are set and the I/O track is switched, or after determining that no switch was necessary because of remarks, the two parts of the message are brought into the computer, stored in general storage for recovery in case of future machine error, and placed on two tracks set aside as processing tracks. The T&FU is instructed to bring in the next message to the I/O tracks. The message-received counter is updated and a message is sent to the supervisor's typewriter notifying him that processing has started on this input message. The current clock time is stored in a factor storage location. If the input message contains remarks, they are stored in a Remarks Table, and the four low-order characters of the address, in which they were stored, are added to the flight data on the processing track. The flight progress strip has a capability of carrying only 24 characters of the remarks; however, an input message may contain as many as 36 characters of remarks. If an input message contains more than 24 characters of remarks, all of the remarks on this input message are included in the message sent to the supervisor's typewriter so that he may determine distribution within his center. In any case, all of the remarks are stored and carried with the flight plan to the next center, even though only 24 characters are printed on a strip.

Working storage tracks are next initialized to spaces as necessary for future processing.

If this message originated in another center, a counter is updated for the appropriate center, and a check is made to determine if this message is a proposed flight plan departing from an airport in the adjoining center's area. No processing is required on such a proposal other than printing out a strip to be used in approving the flight's entry into this center's area. The flight data and route are adjusted into the format necessary for printing a strip, and the previously stored remarks, if any, are erased from the Remarks Table. The Printout Routine is then entered to print the strip. Processing on all other messages proceeds to a subroutine which converts the time on this message, if any, to minutes and stores the converted time in a separate area on the flight data processing track. If the time was between 0000 Greenwich and 0959 Greenwich, inclusive, 2400 was added to it before conversion to minutes. (See "Searching the Clock Readout Table.")

The kind of message character in the flight data is now placed into a Code Distributor Register (CDR). The CDR, when loaded and probed, emits a pulse from a hub on the computer plugboard dependent upon the character which it contains. Therefore, the kind of message code is used to bring the proper routine out of general storage and to direct the processing to this routine. (E kind goes to the Airway Routine, X kind goes to the Continuation Routine, R kind goes to the Readout Routine, and so forth.) E (en route through the area) or N (proposed departure) kind of messages update a counter showing the number of flight plans received.

Common Processing Following Other Routines: Following the normal processing of a message through the Airway, Direct and/or the Continuation Routines, the Executive Routine is again entered to direct the remaining processing through proper areas.

Normal processing of an E or N kind of message at this time would bring out the Flight Data Table (Table 2) for this flight to a working track on the high-speed drum for the Time Computation and Printout Routines, and would place the first Table 7 general storage address in a working storage location for the Time Computation Routine. The flight data track, now modified, is stored in general storage for recovery in case of a future computer machine error. It would then go to the Time Computation Routine to compute the time on the first strip to be printed. Also, at this time, if this message did not contain all of the route for this flight,

a Continuation Message Index record would be processed and stored. In this case, an area would also be set aside in the general storage area known as the Continuation Table (Table 14) for the continuation route.

Other message variations re-entering the Executive Routine at this point would be as follows:

1. An X kind of message, with some preceding strip on the original message stored in the Clock Readout Table. No further processing is required on this message at this time. The continuation route has been tied with the original portion of the route. When the data on this flight are found in the Clock Readout Table, processing, including the continuation route, would continue.

2. An X kind of message on a proposed flight plan and the proposed strip is already printed. In this case, all that is required is to print a strip, to be put with the original proposed strip, containing only the aircraft identification and the remainder of the route. Processing goes directly to the Printout Routine to produce the strip.

3. A departure message (D kind). The only variation here is that the required Table 7 address (the second fix instead of the departure airport fix) has already been placed in working storage for time computation by the Departure/Modification Routine. Therefore, no Table 7 address need be added at this time before going to the Time Computation Routine.

4. A proposed flight plan (N kind), which requires an intercenter message to be sent after printout. The only variation on this kind is that the Station Directing Code (SDC) used to direct the Printout Routine to the Intercenter Message Routine and to direct the intercenter message to the proper center is added to the starting Table 7 data.

5. A modification message (M kind), which has already been determined to require a Continuation Message

Index to be built. Table 2 is already on the proper working storage track and the first Table 7 address is in the proper location for time computation. Processing goes immediately to process a Continuation Message Index and to set aside the Continuation Table area.

6. An X kind of message, on which all preceding strips resulting from the original portion of the route have been processed. Before bringing out Table 2 and going to the Time Computation Routine to continue processing, the first Table 7 of the continuation route portion, instead of the first Table 7 for the flight, is read into working storage for the Time Computation Routine. When the last strip of the route contained on the original message was printed, the time on that strip, which was converted to hours and minutes for the printout, could not be placed in the previous fix time of the next fix Table 7, as the next fix was not known at that time. Therefore, at this time, the time in minutes from the last Table 7 printed out must be converted to hours and minutes and placed in working storage to be combined with the first Table 7 of the continuation route.

Building the Continuation Message Index: The Continuation Message Index is built and the Continuation Table area is set aside at the same time but in different areas. First, the time this message was received is taken from the storage location into which it was stored and is converted to minutes. It is then updated by 4 minutes and stored with the Continuation Message Index data.

The Continuation Table is now searched for a blank area. Because of the size of this table, it would be too lengthy to start the search at the beginning of the table. At the start of each day, this table is completely cleared of data and when the first search is made, the first area will be found. This address is then updated by one record. The next search will then start at this next address and, of course, find a space immediately. This continues through the table, putting each new record in the next location, until the end of the table is reached. At that point, the start address of the table is replaced as the address from which to start the next search. If this condition is ever reached, the areas

at the beginning of the table again will be available. However, if there are some records still stored, the search will bypass those areas and leave them undisturbed. If the situation should exist whereby this table became full, an error routine is entered which transmits a message to the supervisory typewriter indicating that the Continuation Table is full, and processing continues with the original portion of the route. When the X message for this flight is received, it will be rejected as an error as there will be no method of tying it to the original route.

When an area is found in the Continuation Table, the address of this area is put with the Continuation Message Index data. The computer flight number and the last Table 7 address of the original route are put in the Continuation Table area. If this was a proposed departure, the departure point would be put into this table as a flag for future processing. If the original processing had to be terminated because the X message contains more route within the center's area, then the last fix and airway also are put into this table to allow processing of the remaining fixes when the X message is received. The addressor of the original message and the aircraft identification are added to the Continuation Message Index data, and the Continuation Message Index Table is searched for an unused area. When one is found, the record is stored in that location. If no unused area is found, an error message is sent to the supervisory typewriter indicating that the Continuation Message Index is full, the previously built Continuation Table record is erased, and processing of the original data is continued. As with the Continuation Table full condition above, the X message will be rejected as an error when received.

Subroutines: A group of subroutines common to several areas of the program are also included as a part of the Executive Routine. These routines perform the following operations:

Subroutine "a": A subroutine to send messages to both of the supervisory typewriters. Entry to this subroutine requires that the exit step must be set to return processing to the proper area after the message is sent to the typewriters and the complete message to be sent must be on the Block Transfer Buffer (BTB), in proper order, including the necessary function codes for the typewriter, If either typewriter is out, the message is sent to the other, and another message is immediately sent to the working typewriter that the other is out. If both typewriters are out, the computer program stops, as no

at the beginning of the table again will be available. However, if there are some records still stored, the search will bypass those areas and leave them undisturbed. If the situation should exist whereby this table became full, an error routine is entered which transmits a message to the supervisory typewriter indicating that the Continuation Table is full, and processing continues with the original portion of the route. When the X message for this flight is received, it will be rejected as an error as there will be no method of tying it to the original route.

When an area is found in the Continuation Table, the address of this area is put with the Continuation Message Index data. The computer flight number and the last Table 7 address of the original route are put in the Continuation Table area. If this was a proposed departure, the departure point would be put into this table as a flag for future processing. If the original processing had to be terminated because the X message contains more route within the center's area, then the last fix and airway also are put into this table to allow processing of the remaining fixes when the X message is received. The addressor of the original message and the aircraft identification are added to the Continuation Message Index data, and the Continuation Message Index Table is searched for an unused area. When one is found, the record is stored in that location. If no unused area is found, an error message is sent to the supervisory typewriter indicating that the Continuation Message Index is full, the previously built Continuation Table record is erased, and processing of the original data is continued. As with the Continuation Table full condition above, the X message will be rejected as an error when received.

Subroutines: A group of subroutines common to several areas of the program are also included as a part of the Executive Routine. These routines perform the following operations:

Subroutine "a": A subroutine to send messages to both of the supervisory typewriters. Entry to this subroutine requires that the exit step must be set to return processing to the proper area after the message is sent to the typewriters and the complete message to be sent must be on the Block Transfer Buffer (BTB), in proper order, including the necessary function codes for the typewriter, If either typewriter is out, the message is sent to the other, and another message is immediately sent to the working typewriter that the other is out. If both typewriters are out, the computer program stops, as no

supervisory notifications of program or error conditions are possible. When one of the typewriters is fixed and put on line, restarting from this point will cause the program to continue, starting with a printout of the supervisory message which was attempted at the time the program stopped. If, as explained in the Typewriter and High-Speed Printer Routines, the typewriter in the FLIDAP area is to be used as a strip printer, this typewriter is bypassed in this subroutine during the period it is thus used. At the start of this type of operation, a message is sent to both typewriters to advise the supervisors of the condition causing this type of operation and advising them that strip printout will now occur on the FLIDAP supervisor's typewriter. No further reference is made to this typewriter as a supervisory typewriter until it is no longer needed as a strip printer.

Subroutine "b": A subroutine which converts a time from hours and minutes to minutes. This subroutine requires that the exit step be set and that the time to be converted be in register "a". Actually, there are three entry points to this subroutine, but two of them are used merely to set the exit step properly.

This subroutine is the place in which 2400 is added to the time before conversion, if the time is between 0000 and 0959 originally. This is done to conform with the time factor in the Clock Table and to eliminate the necessity of checking for a change of day every time a time manipulation is made.

At the end of this subroutine, the time converted to minutes is in the Block Transfer Buffer (BTB) word zero.

Subroutine "c": A subroutine to accumulate the proper data necessary for a strip printout or an intercenter message. This subroutine requires that the exit step be set properly and that the required Table 7 (fix data) and its general storage address be available in the General Storage Buffer (GSB) and the General Storage Address Register (GSAR), respectively, before entry to it. There are two entry points to this subroutine, one of which is used merely to set the proper exit. This subroutine places the Table 7 and its address onto a working track. The flight's aircraft identification and departure point (Table 1) are placed on the working track (track 97) with Table 7 and the flight's route data (Table 2) are placed on another working track (track 96).

Subroutine "d": A subroutine to read out the proper printout routine, either Typewriter Printout or High-Speed Printer, from general storage, and to direct the processing to the proper entry point to perform the strip printout function.

There actually are two printout routines in the Master Operational Program. The primary one provides normal strip printout on the High-Speed Printer. The other is used only as a backup auxiliary routine and provides strip printout on the supervisory typewriter in the FLIDAP area in the event of High-Speed Printer failure. These two routines occupy the same areas on the high-speed drum when brought out of general storage, and their entry points are identical. In the event that a strip printout is attempted with the High-Speed Printer Routine and is unsuccessful, or it is desired to return to High-Speed Printer printout after temporary typewriter printout, a method was needed to insure that the same conditions are established in the new printout routine as were established for this strip in the routine originally on the high-speed drum. This is accomplished by ensuring that the new routine is entered at the same point as the old routine. This subroutine brings out the Tailoring Routine and the desired Printout Routine from general storage, establishes the proper field patterns for tailoring, and jumps to the proper entry point in the Printout Routine or in the Tailoring Routine. The exit step which jumps into the proper entry point is in an area in the Executive Routine which is never overwritten on the high-speed drum. Once it is set to a desired entry point prior to entry to this subroutine, it remains set until the next strip resets it. If a printout of the strip is not accomplished, this subroutine is re-entered, the new Printout Routine is read from storage, and is then entered through this step to the same entry point as in the original routine.

Subroutine "e": A subroutine to handle the various operations required by error conditions other than machine errors. Generally, these errors would be printed out on the supervisory typewriter directly following the input message pertaining to this flight; therefore, there is no need to identify the flight plan again.

Whenever an error other than a machine error is encountered, a three-digit code is sent to an error subroutine step and the error subroutine is entered. This subroutine uses the code to generate the address of a one-word record in general storage. This record is removed and included as the first part of the message to the

supervisor to identify the type of error which occurred. The error identification consists of a two-character general designation and a three-character specific designation. The general error designators are: OE - Operator Error, an error generally caused by the operator entering the message, such as a duplicate message; DE - Data Error, an error generally caused by incorrect data in the input message, such as a route of flight showing an airway which does not exist; PE - Program Error, an error generally caused by improper storage area assignment, such as a table becoming full and unable to accept further data. In some cases, such as (DUP) duplicate message error or (CDR) code distributor register error (improper kind of message), this is the only notification necessary to the supervisor.

Several of the errors require that certain identical data be sent to the supervisor following the kind of error notation. All these are data errors, as follows:

1. NFE (No Find Entry). This is an error indicating that the entry fix on the flight plan for a named airway was not in Table 4.

2. NF3 (No Find Table 3). This is an error indicating that an airway in a portion of the route within this center's area was not found in Table 3.

3. NFJ (No Find Junction). This is an error indicating that the junction shown as joining two airways is invalid or that the two airways joined in the route do not have a common junction point.

4. NFX (No Find X Coordinate). This error is caused by the program generating an X coordinate for an entry fix or junction of a direct-route segment which is beyond the limits of the X coordinate for this center's area as shown in Table 6.

5. DSE (Direct Segment Error). This is an error indicating that a direct segment does not have any intermediate fixes within this center's area. This may be caused by an improper segment sent to this center but actually within another center's area, or if the path of the flight is such as to pass between fixes in this area, but beyond the established perpendicular distance from the fixes.

6. EOJ (Entry Or Junction). This is an error caused by either the entry point or the junction of a direct-route segment not being found in Table 6 or Table 5.

7. RDD (Relative Distance and Direction). This error is caused by invalid characters in the relative distance and direction portion of the fix identification (that is, 1ØXE instead of 1ØSE).

8. RTE (Rho-Theta Error). This is an error caused by an invalid compass direction (greater than 360°) in the angle portion of a rho-theta fix point of a direct-route segment.

9. LAT (Latitude). This error results from a latitude in the route of flight which is beyond the latitude parameters designated for flights entering or leaving this center's area.

10. LON (Longitude). This error results from a longitude in the route of flight which is beyond the longitude parameters established for flights entering or leaving this center's area.

These errors progress through a common area in the subroutine which places the time from the flight plan and the segments of the route being processed when the error occurred into the supervisor message. This gives the supervisor the bad information in the route, and the time from the flight plan makes him aware of the urgency necessary to correct the data and notify the controller involved.

This subroutine handles the rest of the errors by again referring to the code inserted at the beginning. By shifting the code, doubling it and adding it to a factor, a new address is generated. The data in general storage at this address are read out. It consists of five program steps necessary to provide the supervisor with the proper data for this particular error. The errors in this category and their recovery are as follows:

1. T1F (Table 1 Full). This program error results when Table 1 becomes full. The time from the input message is added to the supervisor's message. Any

future flight plans received will be rejected with this same error indication until a time is reached when old flight plan data are erased from the tables.

2. T7F (Table 7 Full). This program error results when a Table 7 area required for this flight plan becomes full. Any future flight plan, with a fix on its route of flight requiring a record in this Table 7 area, will result in this error indication, until a record is erased at some future time. The identification of the fix whose Table 7 area is full and the time from the input message are added to the supervisor's error message. The normal processing of this flight is continued except that this Table 7 is stored in an overflow location of general storage.

3. NOX (NO X Message). This data error results when 4 minutes have elapsed since a message was received which requires an X message to complete its route and the X message has not been received. The addressor of the parent message and the aircraft identification are added to the supervisor's message. In 10 minutes after this error indication, the Continuation Index and the Continuation Table being held for this flight will be erased if the X message still has not been received. If an X message is received after that time, a NOE error will result.

4. NOE (NO E Message). This data error results when an X message is received for which no Continuation Index record is available. This occurs if no parent message (E or N type) was previously received and properly processed, or if an X message is received more than 14 minutes after receipt of the parent message. In the latter case, the supervisor was notified 4 minutes after receipt of the parent message that the X message was not received. (See NOX error.) No further processing of this message is possible as there is no tie to the parent message. (Also see XXF and XTF errors.)

5. RTF (Remarks Table Full). This program error results when the Remarks Table becomes full and a message with remarks is received. If there are 24 or less characters of remarks on this message, then the remarks are added

to the supervisor's error message; if more than 24 characters, the remarks are included with the original input message and need not be added here. Processing of the flight plan continues after this error notification but without processing any remarks for this flight plan.

6. XTF (X - Continuation Table Full). This program error occurs when the Continuation Table becomes full and a message is received which will have an X message following containing more route. Processing of this message continues for as much of the route as is contained in this portion of the flight plan. When the X message is received, it will be rejected with a NOE error indication, as there is nothing to tie it to this parent message.

7. XXF (X - Continuation Index Full). This program error results if the Continuation Index becomes full and a message is received which will have an X message following containing more route. The previously found Continuation Table record area is erased, and processing continues for as much of the route as is contained in this portion of the flight plan. As in the XTF error above, when the X message is received, it will be rejected with a NOE error indication.

8. NF1 (No Find in Table 1). This data error results from a search of Table 1 for a specific flight whose identifier is not found in Table 1. This error may occur in the Readout, Cancellation and Departure/Modification Routines. This is the only notification data necessary, and processing of this message ceases.

9. NF7 (No Find in Table 7). This data error results from an R. (readout) kind of message which requests a strip readout for a flight as a specified fix and there is no Table 7 at this fix for the flight requested. The fix identification is added to the supervisor's error message. No further processing of this message is possible.

Airway Routine (Appendix V)

The prime objective of the Airway Routine is the processing of airway segments and the construction of Fix-Data Tables (Table 7) for each fix within the segment. Since airway segments normally predominate over direct segments, en route and proposal flight plans are always directed by the Executive Routine to the Airway Routine as a common building ground for the Flight Identification Table (Table 1) and the Flight-Data Table (Table 2).

Common Processing for Direct and Airway: Message kinds E (en route) and N (proposed) have unique entry points into the Airway Routine for the processing of Table 1 and Table 2 for the Airway or Direct-Routines. An N message is tested for having been previously entered by searching Table 1 with the aircraft identification and departure fix. If a find is encountered, a duplicate error is indicated and processing is terminated. The N message route must be tailored to position the departure point in the entry fix location of the BTB.

The E message is tailored on entry, placing the coordination fix in the entry fix location of the BTB. The common processing for E or N messages starts at this point with a search of Table 1 for storage space. Prior to probing the search, the entry fix is stored for airway processing and the entry segment for direct. The latter requirement is for the possibility of a coordination fix of more than four characters. The aircraft identification and departure fix are stored in the found location in Table 1. From the address of this location in general storage, the Table 2 address is developed arithmetically and the flight data are stored.

A test is then made for pad codes in the airway portion of the first segment, which indicates that a portion of the route has been deleted as no longer pertinent to processing. If this is the case, the route is tailored to position the next segment for processing. The test for direct occurs at this point and a positive causes the Direct-Route Routine to be read in and to assume processing.

Segment Processing Loop: The two main loops within the airway program are the segment processing loop and the fix processing loop. The segment processing loop starts with a test for the requirement of sending an intercenter message on a proposed flight plan. This test is invalid when processing the first

segment, becoming valid with the second segment and thereafter. The segment counter is updated by one. The airway for this segment is isolated and a search of the Airway Table (Table 3) is activated. While the search is in progress, the junction fix is tested for validity, and if found to be nonfiled (padded out), a switch is set to search the Airway Junction Table (Table 8) for the junction. The airway (Table 3) search is then probed and the found data stored. A search is then initiated in the Airway Fix Table (Table 4) for this airway using the segment entry fix as an identifier. During the search, a test for message being en route or proposed is made, to set the direct-route load step to the appropriate entry points desired for processing other than the first segment. The Table 4 search is probed and the Table 4 address for the entry fix is stored. A no-find from this search activates a search of the Fix Index Table for the possibility of the filed fix being other than the one used in Table 4 (local airport, low-frequency range). A find from this search replaces the secondary fix with the major fix and Table 4 is searched again. Another no-find results in an error.

The route is now tailored to position the next segment for later processing and the switch setting for nonfiled junction processing is tested. If the junction is not filed, Table 8 is searched with the next airway as an identifier. A find makes the Table 4 address of the junction fix immediately available from Table 8. A no-find is an error, and the route is restored to its condition prior to the last tailoring for the error printout. If the junction is filed, the junction fix is used as the identifier for a search of Table 4 and the found address is stored for processing. A no-find indicates the possibility of the junction being outside the center area and a search in the Outside Fix Table (Table 5) is initiated. A find in Table 5 is followed by another search of Table 4 using the sign of the found fix as the identifier. The find in Table 4 will be the first fix outside the center area and this fix becomes the junction fix for this segment processing. A no-find in Table 5 causes a search of the Fix Index Table as in the case of the entry fix.

With the segment limits established, a test is made to determine if this is the first segment of the flight plan. If it is the first segment, tests are made for proposed or departure. A departure kind of message indicates that a route change has occurred and some special handling is required. This will be

described in the subsection, "Special Handling." A proposal causes the setting of several switches to permit the building of Table 7 for the entry fix which, as opposed to the entry fix of an en route message, is a fix within the center area. If this is not the first segment, or if it is an en route message, these switch settings are bypassed.

Common processing continues and tests of the junction fix are made to determine whether or not it is outside the center area. For the junction fix being outside, the station direction code is stored and switches are set to bypass processing the junction, to store the station direction code in the coordination fix Table 7 and to bypass the end-of-flight-plan tests. If the junction is inside the area, the junction fix is stored and a switch is set to bypass the no-print test. The junction fix Table 4 address is stored in a working location where it will be modified for the processing of successive fixes in this segment. A comparison of the entry fix Table 4 address against the junction fix Table 4 address establishes the modifier as either plus or minus four, according to the numerical direction in Table 4 from the junction to the entry. It also sets the switch for the appropriate mileage factor to be stored in Table 7. At this point, the program starts the fix processing loop which is contained within the segment loop.

Fix Processing Loop: In processing fix postings for a segment of route, the normal processing starts with the junction fix and proceeds back along the airway until reaching the entry fix. In processing the first segment of an en route message, the entry fix is outside the area and is not required; in succeeding segments, the entry fix is the junction fix of the previous segment and has been processed as such. On a proposal message, however, the entry is the departure fix and at the start of the fix loop, the departure fix Table 7 is developed.

To build the departure fix Table 7, the Table 4 data for the fix are made available, and switches are set to bypass the no-print test and to store the Table 7 address of the fix as the coordination fix Table 7. The latter is necessary because of the possibility of the departure point being beyond the established coordination fix for the airway. The mileage and color code are isolated, and a search for spaces in the Table 7 for this fix is initiated. During the search, the data for Table 7 are assembled in the BTB. Working symbol areas are initialized. The search of Table 7 is probed and the Table 7 for this fix is written in general storage at the found address. The Table 7

address for the departure fix is stored in several working locations for availability in later processing. A switch is set to test for this being a one-strip flight plan, and the program returns to the start of the fix processing loop to commence processing the junction fix.

In normal fix processing, the Table 4 of the junction fix or the last fix processed is modified by the plus or minus four modifier. If the junction fix is an outside fix, a double modification occurs since Table 7 for an outside fix is not required. The Table 4 of the fix to be processed is then compared against the entry fix to set conditional storage. The setting of conditional storage has two functions, that of determining a one-strip flight plan for a proposal, and to establish the junction of the last segment processed as being the last fix in the center area for either a proposal or an en route flight plan. In either case, processing is directed to a point in the program where data are assembled for an intercenter message. This will be described in the subsection, "Completing the Segment Loop."

If an equal condition did not exist in the comparison of the entry Table 4 and junction Table 4, the fix data for this posting are made available for processing. Each fix of the segment is tested for being a coordination fix until an equal condition results in bypassing this test. The equal condition also sets a switch to store the Table 7 address of this fix as the coordination fix Table 7. As each succeeding segment is processed and additional coordination fixes sensed, the coordination fix location is updated until it contains the correct coordination fix Table 7 address for the flight. The mileage factor for this fix is then stored in the GSB. If this fix is not a junction fix, it is tested for being a no-print fix, resulting in the accumulation of the mileage factor in the next fix Table 7 and a test for end-of-segment. End-of-segment terminates the fix processing loop. If it is not end-of-segment, the program reverts to the start of the fix processing loop to handle the next fix. A junction fix or a print fix continues into the building of Table 7 for the fix.

The building and searching for Table 7 storage is the same as previously described for the departure fix of a proposal. However, prior to probing this search, and if the flight plan is a proposal, a distance accumulation and a test against the distance this flight would travel in 20 minutes are started. This test is continued fix to fix and segment to segment, until the accumulated distance exceeds the 20-minute distance or end-of-processing

occurs. If it is the latter, a switch in the Executive Routine remains set for the transmission of an intercenter message on this proposal. An en route message bypasses this test.

The Table 7 data for the fix are written into storage at the found location. If no space is found, a Table-7-full error is printed out on the supervisory typewriter, and the data are stored in an overflow area. The address for this Table 7 is stored in the next fix-address location and a test is made for end-of-segment. If it is not end-of-segment, processing begins at the start of the fix loop; otherwise, the program proceeds to complete the segment loop.

Completing the Segment Loop: On completion of building a Table 7 for each fix in the segment, a switch is interrogated to determine if the junction of this segment is outside the center area. If it is, the station direction code, the ICM segment counter, the coordination fix Table 7 address, and the coordination fix code are stored in the last Table 7 for the flight. If the junction and coordination fixes are not the same fix, the ICM segment counter and the coordination fix code are stored in the coordination fix Table 7. A test is then made for this being the first segment. An affirmative results in the storage of the starting fix Table 7 address in Table 2 and tests for termination of processing are begun. If it is not the first segment, the next fix Table 7 address is stored in the previous segment junction fix Table 7 prior to the termination tests.

A switch setting at this point, set by the test for junction outside, terminates airway processing. If this switch is not set, a test is made for another legitimate segment. Pad codes in the next airway field indicate that the aircraft is landing at the last junction fix processed, and the Table 7 for this fix is coded accordingly. If the junction fix of the next segment is CTTY, processing is terminated with the storage of the last junction fix (precaution for event of nonfiled junction) and the next airway for processing when the continuation message is received. An affirmative response to a test for VFR results in termination of processing. If none of the requirements for end-of-segment are met, the program assumes more processing is required, and the data pertaining to the junction fix of the segment just completed are transferred to the entry fix locations for the next segment and the program directed to the start of the segment processing loop.

Special Processing: In developing programs for modification of route data and the handling of continuation messages, some special programming was required in the Airway Routine. When a departure message indicates a change in route, the processing is directed to either the Airway or Direct Routine in accordance with the type of segment to be processed. In airway processing, it is processed as a proposal with two exceptions. No test is made for sending an ICM proposal, and the printing of a strip for the departure fix is suppressed. When the test for a departure message indicates an equal, several switch settings are made to deviate from normal proposed processing. The addition of several unique steps were required to process a one-strip departure with a change in route since all that is required is an intercenter message.

A continuation message directed to the Airway Routine is processed as an en route message and follows the normal processing with one exception. If the junction fix of the last processed segment of the parent message is found to be the last fix in the center area, no further Table 7's are compiled and a test is made to determine if the last strip has been printed. A positive directs the processing back to the Continuation Routine for the assembly of data for a rider strip. If the last strip has not been printed, no further action is required and the program reverts to the Executive Routine.

Direct-Route Routine (Appendix VI)

The Direct-Route Routine defines a direct flight between two points by definition (through automatic extrapolation) of the correct control fixes on or within a designated perpendicular mileage limit of the course. The points representing the limits of a direct course may be filed as navigational fixes, points relative to a navigational fix, or geographical points expressed in degrees and minutes of latitude and longitude. These limit points are fully described in ATM Circular 200-12.

The Direct Routine must establish a common mathematical form which will represent the entry and junction points of a direct segment in an applicable processing method. The rectangular grid coordinate system provided the necessary basis for this representation. This system was constructed to encompass a specified control area and the adjacent control areas in the first quadrant of the plane (Fig. 27), so as to depict X and Y values of fixes as

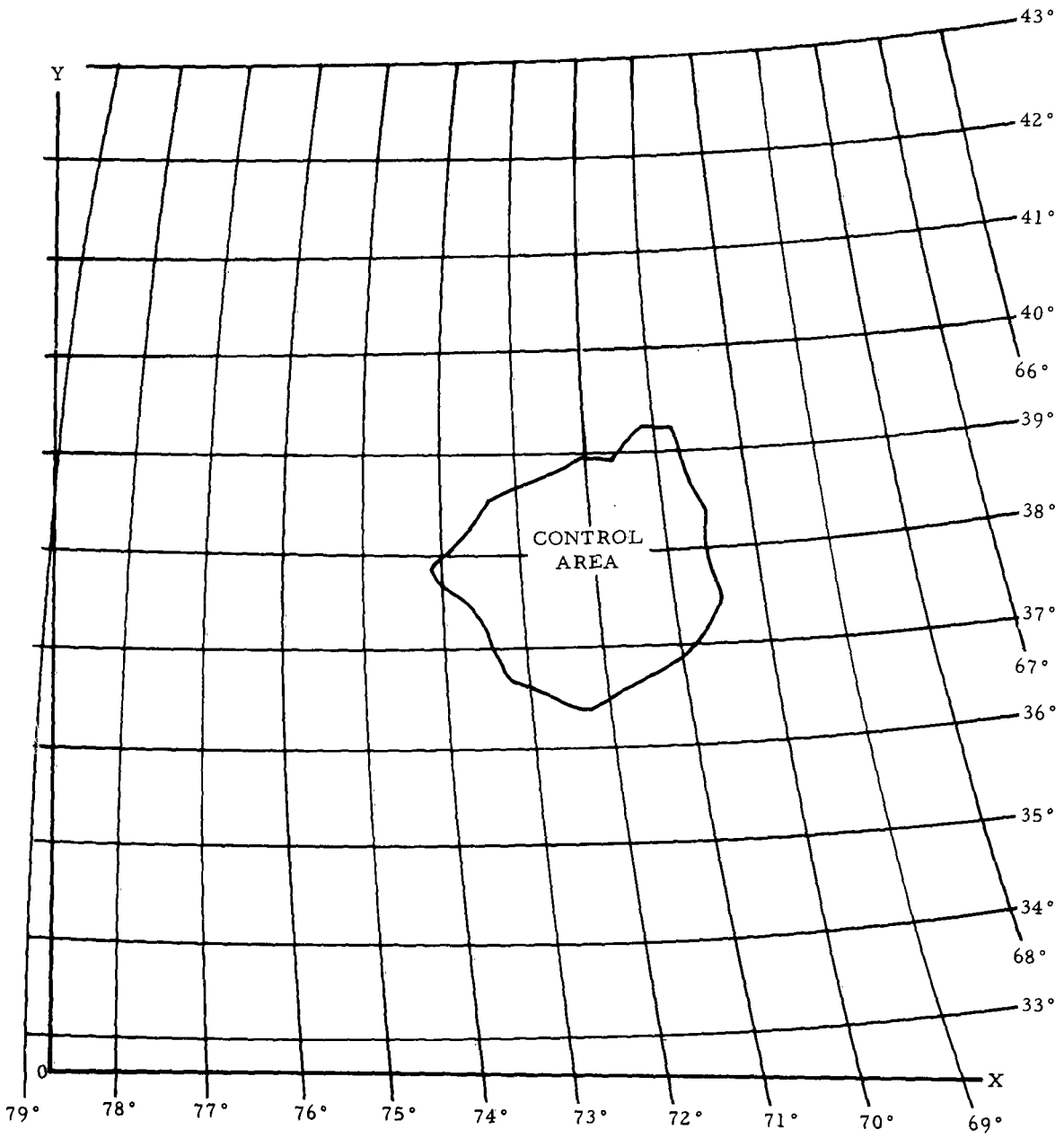

FIG. 27 CONTROL AREA IN FIRST QUADRANT

plus values only. With the coordinate system established, the fixes within the quadrant now have numeric values referred to as X and Y coordinates. Construction of the data tables will be completed in the formats shown in the section entitled "Tables of Data."

The Direct Routine first defines the points that represent the entry and junction. This may be any combination of the following types: (1) fix, (2) rho-theta point, (3) relative distance-direction point, and (4) latitude-longitude point. In types (1) through (3) above, the X and Y values of the fix are obtained from Data Tables 5 and 6. If the entry or junction is type (1), no further modification is needed to derive the X and Y values. However, types (2) and (3) require modification of the X and Y value to derive the true value which is relative to the values obtained from Tables 5 and 6. The latitude-longitude point requires conversion to X and Y values representative of this point in the plane.

Processing Narrative: The Direct Routine, after receiving program control from the Airway Routine, normalizes the necessary steps for initial processing and relocates the flight data into a working storage area. A test is then made to determine the type of point representing the entry fix. On this determination, the program steps necessary to direct the processing are set, and the process to obtain the X and Y values of this point is initiated.

The methods described below are used in obtaining the X and Y values for the following limit points:

1. Relative Distance and Direction Point (Example - 10 NE IDL....): A search is performed with the fix (IDL) to find the X and Y value of this fix. A look-up of the sine and cosine functions of the relative direction (NE) is performed. The distance (10) is multiplied by the sine. This result is added to the Y value of the fix, which results in the Y value of the point. The distance is miltiplied by the cosine. This result is added to the X value of the fix, which results in the X value of the point.

2. Rho-Theta Point (Example - IDL 320040): Calculation of the X and Y of this point is obtained by the same procedure as in 1., above, with one exception. This exception is the method of acquiring the sine and cosine functions. The theta (320) is modified to give the storage address of the functions, which eliminates searching.

3. Latitude-Longitude Point (Example - 3910-08245): A search in the Latitude Reference Table with the longitude, rounded to the nearest 10 minutes of a degree, yields the miles from equator to the X axis. The degrees of latitude are converted to miles. The miles found in the reference table are subtracted from the miles resulting from the conversion. This results in the Y value of this point.

A search in the Longitude Reference Table with the latitude, rounded to the nearest 10 minutes of a degree, yields the cosine of the latitude and the approximate miles from prime meridian to the Y axis. The degrees of longitude are converted to miles. This result is subtracted from the miles acquired in the search. The result of the subtraction is multiplied by the cosine function, and this product yields the X value of this point.

4. Fix Point (Navigational Aid, FAA-Designated) (Example - IDL.DRCT...): A search is performed in Tables 6 and 5 with the fix designator as the identifier.

After obtaining the X and Y values on the entry fix, the program determines the type of point representing the junction and obtains the X and Y values via the methods described above.

Once the X and Y values have been developed and stored respectively as entry and junction, the junction X and Y values are tested to determine if this point is within the specified control area. This test validates the necessity of processing the next segment or of preparing an intercenter message on this flight.

With the compiled X and Y data of the limit points, the routine can develop the delta X and delta Y factors. The delta X factor is the value of the adjacent side of the angle, Fig. 28. Delta Y is the value of the opposite side of the flight angle. Both values will be used to develop the distance of this segment and the cosine and sine functions of the course angle. The sign values of delta X and delta Y, plus the magnitude of each, determine the relative direction of this flight.

Along with the delta X and Y development, parameters for extracting only the possible valid fixes from Table 6 are established by developing "X minimum" and "X maximum," and "Y minimum" and "Y maximum." These factors are developed by increasing or decreasing the X and Y values of both entry and

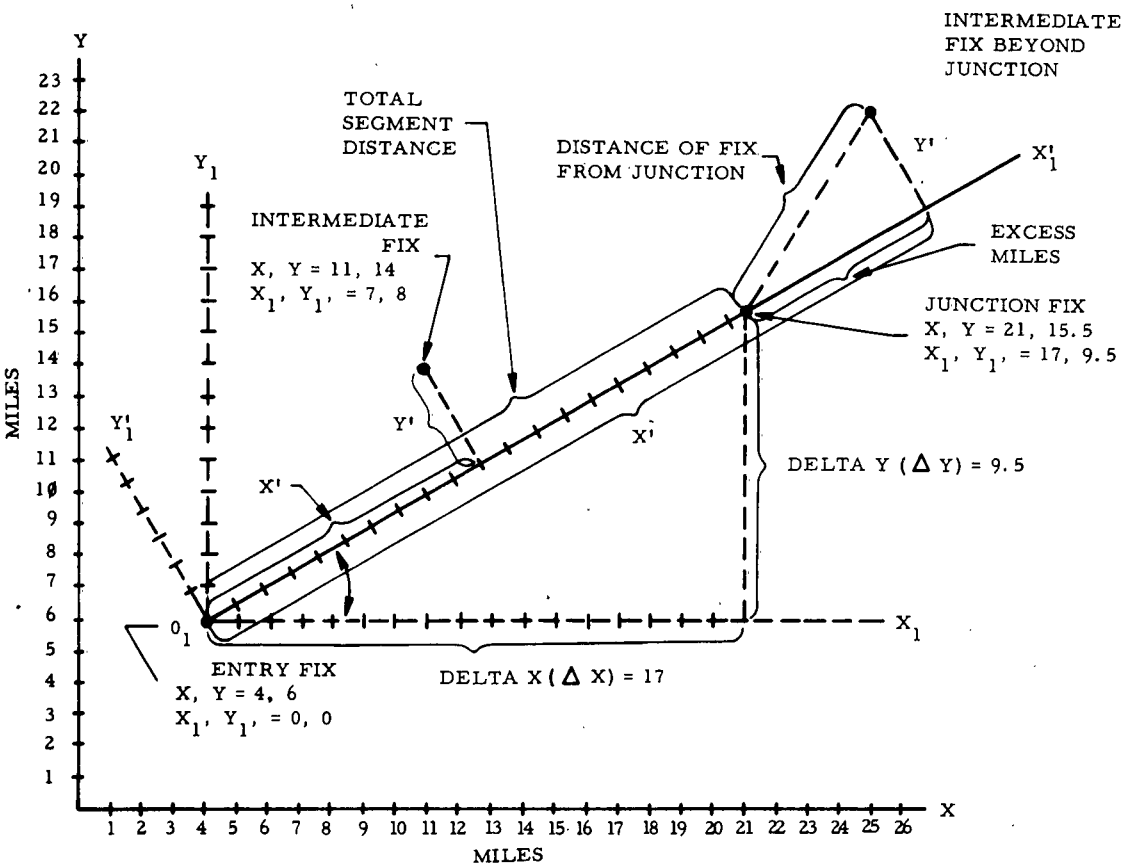

FIG. 28 MATHEMATICAL FACTORS AND THEIR DEVELOPMENT

junction points by a factor of 20. The decrease or increase of the X values is determined by the easterly or westerly direction of the flight. The Y values of the points are decreased or increased correspondingly to the relative north or south direction of the flight. Development of these factors is necessary to insure extraction of intermediate fixes having an X value less than or greater than entry or junction X value, and having a Y value that will result in producing a valid fix posting.

Utilizing the delta X and delta Y factors, the routine employs the Pythagorean theorem to develop the total segment distance ($X^2 + Y^2 = L^2$). The square root of L^2 is the distance (L). To calculate the square root, external program steps (plugboard) are utilized, employing Newton's method of iteration. After the calculation of the segment distance, the program develops the sine and cosine functions. The sine is derived by dividing the delta Y factor by the distance (L). The cosine is the result of dividing delta X by the distance (L).

The program now initiates a search in Table 6 with the X minimum, if the flight direction is easterly, or X maximum, if the flight direction is westerly. This search provides the starting point in the table for the extraction of the intermediate fixes that would possibly be valid control fix postings. To obtain each fix from the table, the address of the initial search is incremented if X minimum is used, and decremented if X maximum is used. As each fix is extracted the X and Y values are tested against the X minimum, X maximum, Y minimum, and Y maximum to determine if the fix is beyond the limits of the segment. If the fix is beyond the segment limits, further extraction of fixes from the table is not required. If the X and Y values are within the minimum/maximum requirements, the program applies these values to the rotation formulae in Fig. 29 ($X' = X\cos \emptyset + Y \sin \emptyset$) ($Y' = Y \cos \emptyset - X \sin \emptyset$). The Y' result (perpendicular distance that the fix lies from the course line) is tested against the operational distance a fix may be along either side of the course line and still constitute a valid fix posting. This test is followed by a test on the X' result against the segment distance. If the X' is a valid distance between the entry and junction points and the Y' is a valid distance, these data (X' and Y') and the fix designator are held in temporary storage.

Before storing the data developed and tested above, a test is made to determine if the fix represents a station direction code (SDC) for transmitting an intercenter message. If so, the SDC is stored and the program extracts the next fix for testing.

Given: $X=OL=r\cos(\theta+\phi)$
$X'=OL'=r\cos\theta$
$Y=LP=r\sin(\theta+\phi)$
$Y'=L'P=r\sin\theta$

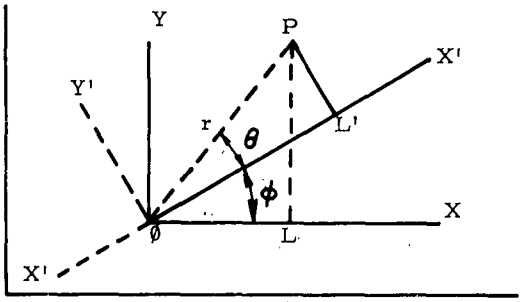

$\cos(\theta+\phi)=\cos\theta\cos\phi-\sin\theta\sin\phi$ Trigonometric identity

Therefore $X=r(\cos\theta\cos\phi-\sin\theta\sin\phi)$

$X=r\cos\theta\cos\phi-r\sin\phi\sin\theta$

Substitute $X'=r\cos\theta$ and $Y'=r\sin\theta$

Then $X=X'\cos\phi-Y'\sin\phi$

$\sin(\theta+\phi)=\sin\theta\cos\phi+\cos\theta\sin\phi$ Trigonometric identity

Therefore $Y=r(\sin\theta\cos\phi+\cos\theta\sin\phi)$

$Y=r\sin\theta\cos\phi+r\cos\theta\sin\phi$

Substitute $X'=r\cos\theta$ and $Y'=r\sin\phi$

Then $Y=Y'\cos\phi+X'\sin\phi$

Solve for Y'

Multiply Y by $\left(\frac{\cos\phi}{\sin\phi}\right)$

$$Y\left(\frac{\cos\phi}{\sin\phi}\right)=\frac{Y'\cos^2\phi}{\sin\phi}+X'\cos\phi$$

$X=X'\cos\phi-Y'\sin\phi$

Subtract $Y\left(\frac{\cos\phi}{\sin\phi}\right)=X'\cos\phi+Y'\frac{\cos^2\phi}{\sin\phi}$

Then $X-Y\left(\frac{\cos\phi}{\sin\phi}\right)=-Y'\sin\phi-Y'\frac{\cos^2\phi}{\sin\phi}$

Multiply by $\sin\phi$

Then $X\sin\phi-Y\cos\phi=-Y'(\sin^2\phi+\cos^2\phi)$

and $\sin^2\phi+\cos^2\phi=1$ Identity

Therefore $\underline{Y'=Y\cos\phi-X\sin\phi}$

Solve for X'

$X=X'\cos\phi-Y'\sin\phi$

$$Y'=\frac{X'\cos\phi-X}{\sin\phi}$$

Substitute in $Y=X'\sin\phi+Y'\cos\phi$

Then $Y=X'\sin\phi+\left(\frac{X'\cos\phi-X}{\sin\phi}\right)\cos\phi$

Multiply by $\sin\phi$

Then $Y\sin\phi=X'\sin^2\phi+(X'\cos\phi-X)\cos\phi$

$Y\sin\phi=X'\sin^2\phi+X'\cos^2\phi-X\cos\phi$

$Y\sin\phi+X\cos\phi=X'(\sin^2\phi+\cos^2\phi)$

$\sin^2\phi+\cos^2\phi=1$ Identity

Therefore $X'=\underline{Y\sin\phi+X\cos\phi}$

FIG. 29 DERIVATION OF ROTATION FORMULAE

If the junction point is represented by a type other than a fix, the X is tested further than that described previously. This test involves the X' value being greater than the segment distance and allows for the possibility of a more realistic, operational fix posting that lies just beyond the junction point. If the distance exceeding that of the segment is 30 miles or less, the relative distance and direction of the intermediate fix from the junction point are calculated. The Y' value is joined with the relative position of the fix to the course line and stored. The X' value is stored along with a Table 7 address. This address is the result of a search initiated after the determination that this intermediate fix is a valid fix posting. The Table 7 address, the X' value, and the code designating the control sector bay where the flight progress strip will be located are stored in a sequence table.

Storage in the sequence table involves the sequencing of all fixes determined to be valid fix postings, according to X' values in ascending order. As a result of this sequencing, the control postings are representative of the flight's future progression. During this situation, the routine eliminates a fix about to be entered in the sequence table if the bay code corresponds to the code of a fix previously entered.

After the compilation of each valid fix posting, the routine combines the compiled data along with the computer flight number and other necessary data into a Table 7 record. When it is determined that all valid fix postings are compiled, the routine performs the necessary manipulations to tie the Table 7 records together for direct addressing by the program. The routine also enters the mileage factor (miles times 60) into the Table 7 record.

If this direct segment is a route portion of a proposed flight, an accumulation of this segment distance and any previous segment distance is made so that it can be determined if the transmission of an intercenter message proposal is required on this flight plan.

If the routine is conditioned to send an intercenter message as a result of the test that determined the junction to be outside the center's area, the necessary steps are performed to enter the SDC and Table 7 address in the last Table 7. When no requirements for sending an ICM are indicated, tests are made for the existence of another valid segment to process. A valid segment is tested for

being airway or direct, and if airway, processing is transferred to the Airway Routine. If direct, the program reverts to the start of direct-segment processing. An invalid segment is tested for an indication that the flight is landing, proceeding visually, or that a continuation message will follow with the balance of the route. The first two possibilities set up the necessary codes for termination. The third possibility results in the storage of the last segment of the parent message and directs processing to the Executive Routine for the construction of the Continuation Table.

Time Computation Routine (Appendix VII)

The Time Computation Routine computes the proper time in minutes for the strip to be printed, and places this time with the previous fix identification and previous fix time in the Fix-Data Table (Table 7) for this fix. This routine also determines whether or not it is now time to print this strip.

First entry to this routine is from the Executive Routine. Subsequent entries for a series of strips to be printed would be from the Printout Routine. After the first strip of a series is sent to the Time Computation Routine, this routine becomes a part of a strip printout iteration which includes the Tailoring and Printout Routines. These three routines remain on the high-speed drum, and the iteration continues as long as there is another strip of this flight plan to be printed, and it is time to print the strip.

Before the Time Computation Routine is entered, two tracks of information have been built. One contains certain necessary elements of flight data for the preceding fix over which this flight has passed or from which it departed. It may contain the previous or departure point fix Table 7 and the Flight Identification Table (Table 1), or it may contain the original flight data as received on input and adjusted in the preceding routine. In either case, this track will contain, in common locations, the address of the Table 7 to be acted upon, the previous fix time both in minutes and in hours and minutes, and the previous fix identification. The other track contains the Flight Data Table (Table 2).

The flight time in minutes from the previous fix to this fix is now computed. This computation is based on the formula $t = d \times 60/r$ where t is the time in minutes, d is the distance in nautical miles, and r is the rate of speed in knots. The distance between

fixes along the route multiplied by 6 was obtained from the Airway-Fix Table (Table 4) or computed in the Direct Routine and is now stored in the Fix-Data Table (Table 7) for this fix. The speed in knots is in the Flight-Data Table (Table 2). The distance times 6 is shifted to the left to obtain two additional zero digits, and is divided by the speed to obtain the flight time to this fix in minutes and tenths of minutes. If this is the first strip after departure, additional time is added to the flight time to compensate for the time required for the flight to climb out to its altitude. (No attempt at extreme accuracy was attempted here because of the many variables involved, such as aircraft type, altitude assigned, distance between fixes, type of clearance issued, and position at which the climb was started. A constant time, added to the first and possibly to the second strip time, has been found to be quite accurate in the field facility programs in compensating for the climb.) The time is now rounded to the nearest minute, and the result is added to the previous fix time in minutes to obtain the estimated time at this fix in minutes. This time, the previous fix time in hours and minutes, and the previous fix identification are now added to the Table 7 for this fix.

On the initial entry to this routine, a test is made to determine if this is a proposed departure. If so, the departure point Table 7 is obtained from general storage and no time computation is necessary. All that is required for this strip printout is that the proposed departure time, in hours and minutes, be placed into the previous fix time area of this Table 7.

The completed Table 7 is now restored into general storage and a test is made to determine if the strip to be printed is in the same control sector as the previous strip printed. If this is the case, a test of time is not required, as all of the strips within a control sector should be presented to the controller together. If this test is negative, the time in minutes just computed is compared to a three-character time factor representing the present time plus 30 minutes. (See "Searching the Clock Readout Table" in the Executive Routine documentation.) A time less than or equal to this factor would mean that it is now time to print this strip.

If this is the first strip of the flight plan, the Flight Identification Table (Table 1) is brought out of storage and put with the Table 7 on the track previously occupied by the original input flight data.

The subroutine to bring out the Tailoring and Printout Routines is now entered. (See "Subroutines" in the Executive Routine documentation.) Processing progresses to the Tailoring Routine for the second portion of the strip printout iteration. The Tailoring Routine will add the remarks, if any, to the track containing the Table 7.

If this is one of the succeeding strips in a series, the Table 1 data and remarks are taken from the previous strip data and placed with this Table 7 on the same track previously occupied by the preceding Table 7. Processing now progresses directly to the Tailoring Routine.

If it is determined that the computed time is greater than the time factor, then it is too early to print this strip. Table 9 (Clock Readout Table) is searched for a blank area. When one is found, the high-order three digits of the computed time, the computer flight number, and the low-order five digits of this Table 7 general storage address are stored in that area. Later, as the time factor increases, this record will be found, the stored Table 7 will be brought out of general storage with the other required tables, and the strip printout iteration will be re-entered, starting at the Tailoring Routine.

Another variation to the Time Computation Routine occurs when a strip is required which would not normally be printed until some later time. In this condition, Time Computation is entered from the Readout Routine through a subroutine which brings the required data to their proper tracks. (See "Subroutines" in the Executive Routine documentation.)

The strips printed will start with the one whose address is stored in Table 9 (the first strip not printed) and continue until all of the strips for this flight, through the sector which contains the strip requested, are printed. The tests for sector and time are bypassed and replaced by a test to determine if the strip being processed is the one requested. When this strip is reached, normal processing is resumed with the next strip. It will also be printed if it is in the same sector as the previous strip, or it will be stored in Table 9.

Tailoring Routine (Appendix VIII)

The Tailoring Routine is entered prior to the Printout or the Intercenter Message Routines. Its primary purpose is to remove the route segments from the original route of flight that are no longer required. This routine also brings the remarks, if any, out of storage and places them with the other tables for printout or intercenter message. If a continuation route for the flight plan has been received, it is also brought out of storage and its portion of the route is tailored with the original portion. The fix time in minutes, as computed in the Time Computation Routine, is converted to hours and minutes, and stored for printout or intercenter message. If this is a proposed flight plan, the tailoring portion is bypassed. Processing proceeds directly to the Printout Routine.

The amount of tailoring necessary for a particular strip is determined by a factor in the Fix-Data Table (Table 7) known as the segment counter. This counter is updated in the airway or direct processing each time a new segment of route is entered, and the updated factor is added to each Table 7 as it is built. (See Airway Routine and Direct Routine documentation.)

A factor of 2, called a segment comparator, is used to determine if tailoring is necessary. An iterative program loop is entered which compares the segment counter to the segment comparator, removes one segment of route if the segment counter is greater than the comparator, updates the comparator by one, and again compares it to the segment counter. This iteration continues until the segment counter and the comparator are equal. This would mean that the fix for which this strip is printed is now in the second segment of the route. It is desired to retain the entry point to this route segment on the strip and in the intercenter message; so instead of tailoring off all of the preceding segment, only the airway portion is overwritten, with dots, and the junction of this segment is undisturbed. In the event that the segment counter is less than 2, no tailoring is required as the fix is within the first segment of route.

If this message had been received from another center's computer, which had also tailored off segments within its area, the first segment would contain dots, as explained above, in order to retain the junction. In this case, the segment containing dots is tailored off prior to entering the normal tailoring iteration.

This message may have a part of its route contained in a continuation message. When the continuation message is received, the additional route is stored and its address is placed in the Flight-Data Table (Table 2) in place of the first Table 7 address. A check is made of this area, and if it contains a continuation route address, this additional route is brought out of storage. Each time a segment of route is removed from the original route, the area containing the continuation route is checked. If there is more route in this area, the first segment is placed at the end of the original route. The continuation route is then tailored once.

Both the tailored original route and the tailored continuation route, if any, are put on working tracks for printout and for future tailoring. When the updated segment comparator is equal to the segment counter, the comparator is updated once more and left for future possible tailoring. Processing proceeds to the Printout or Intercenter Message Routine.

As explained in the Time Computation documentation, the Tailoring Routine is the second portion of a strip printout iteration including the Time Computation and Printout Routines. As long as there are more strips of a series to be processed, all three of these routines remain unchanged on the high-speed drums.

When the Tailoring Routine is entered again from Time Computation after the first strip is printed, it is not necessary to bring out the continuation route or remarks, if any, as these are still in position from the last strip tailoring. The tests for tailoring will continue using the updated comparator and the new strips' segment counter to determine if more tailoring is necessary.

This routine may be entered from the Executive Routine, after finding that it is time for a strip printout or for an intercenter message to be sent on previously stored data. The required Table 7, Table 2, and Table 1 are put on the processing tracks and this routine is entered at the beginning, so that the continuation route and remarks, if any, are brought out and stored. Tailoring will be accomplished, starting with the original complete route as received and a comparator of 2, until the required amount of route has been removed.

The possibility exists that the last fix in a center's area is also the junction of the airway entering the next center's area. The controller would need the airway leading into and out of this

fix on his strip, but the adjoining center would only want the junction and the airway coming into their area. Therefore, the segment counter for the last strip printout may be different than the segment counter required for the intercenter message. After printing the last strip and before entering the Tailoring Routine to tailor for an intercenter message, or after determining that the data found in the Clock Readout Table are for an intercenter message, the strip segment counter is replaced by an intercenter message segment counter also in this Table 7 to accomplish proper tailoring.

As the strip allows only two words of remarks to be printed on it, the third word is stored temporarily on the high-speed drum. When tailoring is completed for the intercenter message, the altitude, speed, and type of aircraft are put with the first portion of the route, and the third word of remarks is added to the track containing the first two words. The Intercenter Message Routine is brought out of storage and entered.

Printout Routines (Appendices IX and X)

There are actually two separate Printout Routines in the Master Operational Program, either of which may be used to print out strips. One of the routines uses the High-Speed Printer (Fig. 30), hereafter refered to as "printer," and the other uses the supervisory inquiry typewriter in the FLIDAP area of a center. The Typewriter Printout Routine is a one-typewriter modification of the original printout routine which used a series of four or six inquiry typewriters as strip printers before the printer was installed. Therefore, it is a very slow strip printing method. The intention of retaining this routine was as a limited backup in the event of printer failure. The typewriter printout would be sufficient to continue a slow printout of the series of strips being printed at the time of printer failure, and perhaps for any flight plans which have already entered the system, such as those strips stored in general storage which are now due to be printed.

These two routines occupy the same areas on the high-speed drum when brought out of general storage, and their entry points are identical for a particular strip. Except as determined by these entry points, the processing within the routine is independent of other routines. As described in the Subroutine Section of the Executive Routine, the proper Printout Routine is determined by

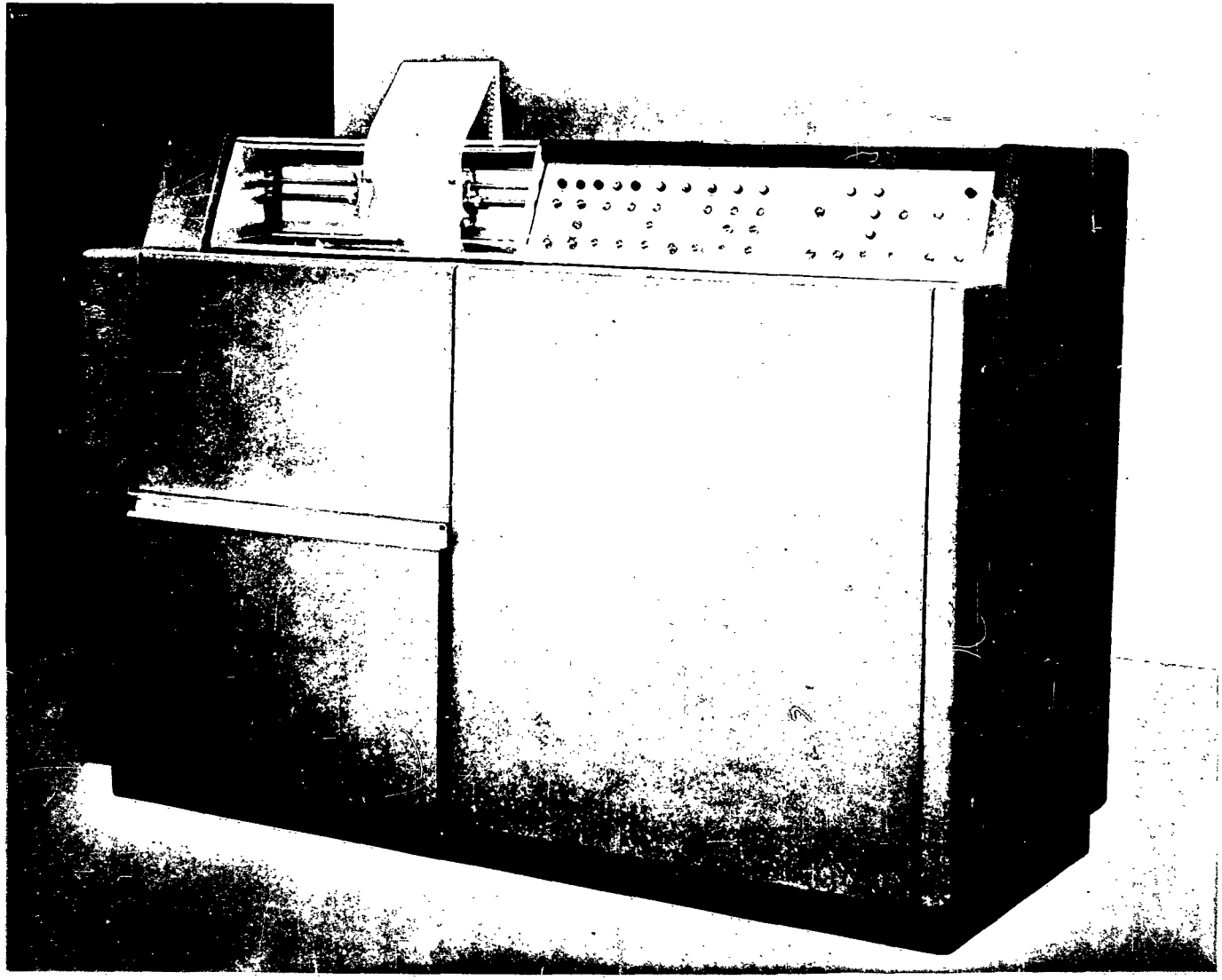

FIG. 30 HIGH-SPEED PRINTER

a constant used in the subroutine and changed when a condition exists in one Printout Routine which indicates that the other is desired. The conditions and the details of the techniques used are described later in this document.

The Printout Routines determine what data are necessary for a particular strip and place these data in the proper format for printout. The strip is then printed while the routine determines the next action required. This determination is made by a series of tests or by the entry point to the Printout which causes a number of processing variations to occur.

Strip data entering the Printout Routine have been arranged so that the original route with the altitude and speed (Table 2) is on a working track. The route for this strip, with all preceding route segments removed that are no longer required (tailored route), is on another working track. The fix data for this strip (Table 7), with the aircraft identification, departure point and first two words of remarks, if any, are on a third working track, The Printout Routine is the last portion of a printout iteration which includes the Time Computation and Tailoring Routines. Normally, the strip data are arranged in the above manner by these routines; however, there are occasions when the required data for a particular strip are arranged in their proper location by another routine.

The only difference between the two Printout Routines is the formatting of the data for the printing equipment (typewriter or printer). Otherwise, the two routines are identical. It is therefore desirable to consider only the normally used routine, the High-Speed Printer Routine, in its entirety. Following this will be a documentation of only the formatting portion of the Typewriter Routine.

High-Speed Printer Printout: When printing a strip on the High-Speed Printer, a nonprintable character leaves a space at the corresponding print position on the strip. The tailored route contains a number of nonprintable pad characters to fill out the fields where a junction is not filed or where there are less than the maximum allowable characters in a route segment. When printed on the High-Speed Printer, the result is a strip with many blank spaces between the groups of characters in the route portion of the strip. This gives an unnatural appearance to the strip, which may make it difficult for the controller to read the route quickly, and may therefore be

undesirable. In order to correct this condition, each line of print in the route portion is considered separately and packed in the following manner:

The first junction to be printed on a line of route is tested to see if it was filed. If not, the airway following is moved to the left to cover the area normally occupied by the junction. If a junction is filed which contains less than four characters, the whole route segment is shifted to replace the pad characters between the junction and the route with one space. The junction and route of this segment are now properly separated. The same test is made of the second segment, and it too is moved to separate its junction, if any, from the route by one space. A test is now made of each character in the first segment to find the first pad character. When this is found, the second segment is placed next to this character. The two segments, now combined properly with only one space between each group of characters, are placed in the first of two words in a separate storage track on the high-speed drum. The pad characters to the right of the second segment are not significant as these will be at the end of the printed line. This procedure continues with two segments at a time (one line of printed route) until all of the route is packed. As each line of printed route (2 segments) is packed, it is placed into the next two words available on the storage track. The only variation is on the first segment where space is left for four characters of departure point, to be added later, regardless of what is presently there. When this packed route is printed, each line of route will have all printable characters to the left end of the line with one space between each group of characters (junction and airway or airway and airway).

The field patterns used to combine each of the two segments of a line of route are the same as those previously established for the Tailoring Routine. When the packing of the route is complete, the original field patterns used in the Executive, Airway, and Time Computation Routines are replaced for the remainder of the High-Speed Printer Printout Routine.

Before any further formatting of this strip is performed, a test is made of the printer output tracks to determine if a special condition, such as an error, exists as a result of the last strip printout. If such a condition does exist, then the last strip may have to be reprinted. When a special condition is recognized, a signal ("general clear") is sent to the printer to clear the special-condition indication, and an attempt will be made to print the word

"VOID" on the last line of the strip last printed. The "general clear" to the printer will clear the special-condition indication, and allow printing of the word "VOID" if the condition was caused by a machine error. It will not clear the special condition if the condition was caused by an out-of-paper or out-of-red-ribbon indication or if the printer is off line in a test condition. Therefore, if either of these last two conditions exists, the special-condition indication will be recognized again immediately, at the time printing of the word "VOID" is attempted, and voiding of the last strip will not take place. The supervisor is then notified that the printer is out, and the word "PAPER" is added to the supervisory message to differentiate this type of outage with that caused by a machine error. If the special condition was cleared and does not exist at this time, a machine error in the printer caused the special condition. A counter is updated accordingly, and the supervisor is notified that a printer maching error occurred.

In the case of a machine error, the strip has been voided and must be reprinted. An attempt is made to reprint the strip on the printer. When the last strip was printed, the two tracks of data, completely formatted for the printer, were stored on two storage tracks of the high-speed drum, where they would not be destroyed. These two tracks are now replaced on the High-Speed Printer output tracks to be reprinted. If the reprinting is successful, the formatting of the strip being formatted when the first special condition was recognized is continued. If, however, another special condition is recognized when the reprint is attempted, this indicates that another machine error occurred when the word "VOID" was printed. The High-Speed Printer machine error counter is again updated. Because this is the second consecutive machine error to occur on the printer, it is considered to be out of service, and a message is sent to the supervisory typewriters that the printer is out because of machine errors.

When the printer is out because of machine errors, is off line, or out of paper or ribbon, it is unusable until the condition is corrected. An alternate strip printout is provided by the Typewriter Printout Routine. At this time, the constant which is used by the steps which bring the Printout Routine onto the high-speed drums, and which presently contains the starting general storage address of the High-Speed Printer Printout Routine, is replaced by a constant containing the starting address of the Typewriter Printout Routine. After this time, and until it is desired to return to the High-Speed Printer operation, whenever the Printout

Routine is brought out onto the high-speed drum it will come from the general storage area containing the Typewriter Printout Routine.

The supervisors are now notified that future strip printouts will occur on the typewriter in the FLIDAP area. This typewriter is bypassed in the normal supervisor message subroutine, and the program stops to allow time for strips to be placed in the typewriter and for the proper tabs to be set. Upon restarting, the old voided strip will be formatted for the typewriter and reprinted before the strip being formatted at the time the special condition was recognized is reformatted for the typewriter and printed. This procedure is described later under Typewriter Printout Routine.

The formatting for the High-Speed Printer continues after it is determined that no special condition existed on the preceding strip or after the preceding strip has been reprinted successfully on the High-Speed Printer. The data are formatted onto the Block Transfer Buffer (BTB) and the General Storage Buffer (GSB), as these buffers may have separate field patterns and a third pattern may be placed for the high-speed drum tracks from which the data are obtained. The data placed on these buffers do not have to be in any particular character order, as the High-Speed Printer plugboard wiring is used to place the data for each line of print in the order desired. However, any change in order on the buffers would, of course, require a change in wiring.

The BTB must contain the data to be printed on the first and second lines of print and the left half of the third line. This includes the first four segments of the route (two segments on each line), altitude, previous fix and previous fix time, flight identification, type of aircraft, this fix identification and this fix time, with the hours separated from the minutes.

The GSB must contain the data to be printed on the right half (route portion) of the third line of print and on all of the fourth and fifth lines. This includes the remaining route segments (fifth through eighth segments), the computer flight number, the speed and the first two words of remarks.

Any character positions on either side of the output tracks which are never printed are not wired on the printer plugboard, and any invalid data in these locations may be ignored. Any locations which normally contain data not required on this

strip must contain spaces or other nonprintable, nonfunction codes such as a pad character (dots). The entry point into this routine, or tests within the routine, determines the type of strip being printed and, therefore, what areas must be spaced. The route portion will already contain either spaces or pad characters in the unused portions as a result of packing and the Tailoring Routine.

A block-transfer-type instruction is used to place the tailored and packed route onto the General Storage Buffer from the working storage track where it was placed when the route was packed. This instruction places the data from the source location onto the Block Transfer Buffer before placing it in its destination location, the General Storage Buffer. Thus, the full tailored and packed route is placed on both of the buffers with one instruction. The portions of the route not required on each buffer are now overwritten by required data or spaces, or are in a character position which will not be printed.

The aircraft identification and the hours of this fix time on the Block Transfer Buffer are to be printed in upper case; therefore, the upper case and lower case symbols are placed appropriately on the buffer to cause upper case and return to lower case when interpreted by the printer. (See High-Speed Printer Plugboard documentation.)

If this is a proposed departure flight plan, the proposed time of departure replaces the previous fix, and spaces are put in the fix time location.

If the previous fix consists of more than four characters (latitude, longitude, rho-theta, and so forth), all characters of this fix are printed on the first line in place of the normal four characters of fix and four of time. The previous fix time is then placed on the second line just beneath the previous fix.

The direction of flight, as determined by the airway or direct processing for this segment of route, is indicated by a code placed in the Table 7 for this fix by these routines. If this is an east or northbound flight, a red color code is placed in the BTB so that it will be detected by the printer. If it is a west or southbound flight, a black color code is placed in the Block Transfer Buffer. In any blockette of data sent to the printer, the last color code detected by the printer determines the color

of print for that blockette. (See High-Speed Printer Plugboard documentation.) If more than one color code is in the blockette, the last one detected, starting from the right to the left of the buffer, determines the color. If no color code is present, the printer remains in the condition last detected. All of the characters on any one strip printed from the Master Operational Program are of the same color and there are two blockettes necessary for each strip; therefore, only one color code in the first of the two blockettes to go to the printer (the Block Transfer Buffer) is necessary.

The High-Speed Printer plugboard has the capability of suppressing left zeros in any designated field. That is, starting at any designated character position and ending at any other character position, the printer, through plugboard wiring, will move from the left to the right and replace any zeros with a space until some character other than a zero or a space is detected or until the last character designated is reached. In this routine, the altitude and the speed on the working storage tracks would contain zeros in their high-order character positions if they did not contain four significant characters (for example, 9000 feet would appear as ØØ9Ø and 430 knots would appear as Ø43Ø). It is not desirable to print these redundant zeros, and extra steps would be required to remove them in the internal program; therefore, the altitude and speed are both placed in the same character positions but on separate buffers (altitude on the Block Transfer Buffer and speed on the General Storage Buffer), so that when they are received onto the printer output tracks they are in identical positions, allowing the plugboard to suppress the left zeros in each as they are read.

A strip which is printed out only as a notice of some pending flight and not used as a regular strip is known as an approval request (Apreq) strip and an A is placed on the General Storage Buffer for printout on the right end of the fourth line of this type of strip.

If this strip is for the fix within a center's area which is the coordination point for this flight's entry to an adjoining center's area (coordination fix), an X is placed on the General Storage Buffer for printout on the right end of the fourth line on the strip.

At this point, the buffers contain all of the data necessary to print one strip. They are now sent to the two sides of the printer output track, and the printer is instructed, via Computer to Input/Output (C-I/O) control lines, to start print. The data from the Block Transfer Buffer are printed first, followed by the data from the General Storage Buffer. The High-Speed Printer plugboard determines the print line and character position on the strip for each character. (See High-Speed Printer Plugboard documentation.) These two buffers of formatted strip data are placed in working storage tracks of the high-speed drum where they will remain to be used only if an error on this printout is recognized later, as described above. Also, at this time, the original three tracks of working storage from which these strip data are obtained are stored in general storage. These will be used to reformat the strip data for the typewriter printout in the event that the High-Speed Printer goes out. This is described later under Typewriter Printout Routine.

A counter for the number of operational strips produced is updated. In this program, if this strip is an Apreq strip, or if it is a rider strip containing the remainder of a route too long for the original strip, this counter is not updated.

Earlier in the program, when it is determined that there is a need for one or more duplicates of this strip to be printed, a number designating the number of duplicates desired is placed in a special location in Table 7. A test is made at this time of this location, and if it contains a number equal to or greater than one, the strip is reprinted, the number is reduced by one, and again compared to one. If it is still equal to or greater than one, the strip is reprinted again. This iteration continues until the number is less than one. These duplicate strips are not counted in the strip counter.

In the event that a special condition is recognized during the printing of a duplicate strip, the same procedure is performed here as was described earlier for reprinting a strip when a machine error occurs in the High-Speed Printer or when the High-Speed Printer is out.

The formatting and printing of the strip on the High-Speed Printer have now been completed, and the following part of the Printout Routine is identical in logic for both the Typewriter and

High-Speed Printer Routines. The only variations are those caused by designation of step locations on the high-speed drum or designation of data location due to different field patterns.

This portion of the Printout Routines deals with the determination of what processing is required following a strip printout. Actually, a number of variations exist at this point. Some of these variations were determined by the type of strip just printed and were established by the entry point to the Printout Routine. Other variations will be determined via a group of tests in this portion of the Printout Routine.

Consider first what might be called a normal strip on an en route flight through the area. A code is now added to the Table 7 for this strip just printed which will be used by other portions of the program to determine if this strip had been printed or not. A test is now made to determine if this is the last strip of this flight plan in this center's area. When the last Table 7 in a center's area is built by the Airway or Direct Routines, data are put into a specific location in the Table 7. This location may contain one of several different codes. It may contain a Station Directing Code (SDC) used in sending an intercenter message. (See Intercenter Message Routine and Output Translate and Format documentation.) It may contain an A indicating that an approach control message is to be sent via the computer.(not presently included in the Master Operational Program). It may contain the word "OVER" to indicate that, although this is the last strip in the center's area, there is no computer in the adjoining center's area, and therefore no automatic intercenter message can be sent. It may contain the contraction "LNDG" to indicate that the flight is landing in this center's area and no automatic approach control message will be sent. If there are spaces in this location, then this strip is not the last strip in the flight plan, and the strip printout iteration returns to the Time Computation Routine to compute the time for the next strip and determine whether or not it is time to print it. Before returning to the Time Computation Routine, a test is made to see if there is a valid next Table 7 address in this Table 7. If this flight plan contained a route of flight too long for the original message, if all of the routing on the original message was completely within this center's area, and if the continuation route message (X kind of message) for this flight had not been received at the time that the last strip of the original message was printed, then no Table 7 for the next fix could have been built and the next Table 7 address

area will contain spaces. In this event, all processing possible at this time for this flight has been completed, and processing returns to the input iteration in the Executive Routine.

When it is determined that this is the last strip of this flight plan, a one-word record is stored in a vacant area of the Clock Readout Table (Table 9) in order to cause all of the stored data on this flight to be erased from general storage after the flight has left this center's area. The high-order three characters of the estimated time, in minutes, over this fix plus 60 minutes, with the three characters of the computer flight number and six pad characters (dots), make up this record. As explained in the "Searching the Clock Readout Table" portion of the Executive Routine, this record will be found and the data on this flight erased 30 minutes after the estimated time over this last fix. Now a series of tests is made to determine which of the codes named above appear in the SDC location. If the code is an A, a routine could be entered to send an approach control message to the appropriate tower. Such a routine is not presently included in the Master Operational Program, so instead, a message is sent to the supervisor that an approach control message should be sent; then the input iteration is re-entered.

If this code is "over" and there is no continuation message needed on this flight, or if it is "LNDG," then all processing is completed for this flight. A short subroutine is entered which updates a counter of the number of flight plans completely processed and formats a message to the supervisor showing the aircraft identification, the last fix processed, and the word "over" or "LNDG."

If this code is an SDC code (Z will always be the second character in this case) or if this code is "over," a test is made to determine if there should have been a continuation route message following with more route for this flight. (In this case, the characters "CTTY" would appear in the last segment of the original route before the destination.) If so, a test is made to determine if this continuation message was received yet. If not, all possible processing has been completed on this flight until the continuation route is received, and the input iteration is re-entered. If the continuation message is on hand, a test is made to determine if all of the route on this message has now been absorbed into the original route portion because of the tailoring of completed portions of route. If more route is still contained in the continuation

route portion, then it is necessary to produce a strip (rider strip) which will contain the remaining portions of the route for the coordination fix. The address of the coordination fix Table 7 for this flight is located in the next Table 7 address portion of the last Table 7 for this flight. If the coordination fix is a different fix from the one just printed, the coordination fix Table 7 is brought out of general storage and replaces the last fix Table 7 on the working storage track. The original tailored route and the tailored continuation route are interchanged on the working storage tracks. The proper switches are set in the Printout Routine to bypass unneeded data and then the Printout Routine is re-entered. The strip produced with these data available and with some areas of the formatting bypassed will be a rider strip to be placed with the coordination strip. It will contain only the aircraft identification, the coordination fix, and the remaining portions of route not contained on the original strip. After this is printed, the tailored original and continuation routes are again interchanged to their original working tracks before continuing processing. If this is an "over" flight, all processing is now completed and the subroutine for a supervisor message is entered as described above.

If the last fix Table 7 contained an SDC code, the coordination fix Table 7 will be brought out of general storage and will replace the last fix Table 7, as described above, so that it will be available for the intercenter message even if there is no continuation route.

If there is no continuation route or after the rider strip for the continuation route has been sent, it is necessary to determine if it is time to send the intercenter message. It is desirable not to send an intercenter message to an adjoining center before a mutually agreed upon amount of time prior to the flight's entry into that center's area. (in this case, 30 minutes before the flight's estimated time over the coordination fix in this center's area). As described in the Time Computation Routine, the strips are printed out according to both the time at the fix and the sector; all strips in a sector are printed out at the same time, regardless of their actual fix times. Therefore, it is possible to have a strip printed more than 30 minutes prior to the flight's estimate of the fix. This condition makes this additional test for time necessary. The estimated time of this flight over the coordination fix, in minutes, is compared to a three-character time factor representing the present time plus 30 minutes (see "Searching the Clock Readout Table," Executive Routine). A time less than or equal to this factor would mean that it is now time to send this intercenter message. A

condition could exist where if this coordination fix is a junction in the route of flight, the controller would require the route to the junction and beyond on his strip. As this portion of route to the junction is completed within this center's area, it should not be included in the intercenter message. Therefore, the intercenter message may require an additional route tailoring not required for the coordination fix strip. The coordination fix Table 7 contains both a segment counter for the strip and one for the intercenter message. At this time, the intercenter message segment counter is placed in the strip segment counter location and the Tailoring Routine is entered to perform the additional tailoring, if necessary, before going to the Intercenter Message Routine.

If it is determined that the estimated time at the coordination fix is greater than the time factor, then it is too early to send the intercenter message. Table 9 (Clock Readout Table) is searched for a blank area. When one is found, the high-order three digits of the estimated time, in minutes, the computer flight number, and the low-order five digits of the coordination fix Table 7 address are stored in that area. After this record is stored in Table 9, all processing for this flight is completed, for the present, and the input iteration is re-entered. Later, as the time factor increases, this record will be found, the stored Table 7 will be brought out of general storage with the other required tables, the intercenter message segment counter will replace the strip segment counter, and the Tailoring Routine will be entered prior to going to the Intercenter Message Routine.

If the strip just printed is a proposed departure strip, an approval request (Apreq) strip is needed to coordinate the departure of the aircraft with the adjoining sector prior to the actual departure and printout of the actual control strip. The formatting portion of the Printout Routine is now re-entered to build this Apreq strip, but several switches are set to bypass data not required on this strip, such as the fix identification and time, and to place the letter A on the right of the strip, as described previously. This strip is not counted.

After the Apreq strip is printed, a code is added to the departure point fix Table 7 in general storage to indicate that a strip has been printed for this fix. No strips for other fixes are required on a proposed departure, so no check is made for another Table 7. A test is made, however, to see if a continuation

route is on hand for this flight. If so, the continuation route is put on the working track for printout and a rider strip is printed. After the rider strip is printed, or if no continuation route was received for the flight, a test is made to see if an intercenter message should be sent. As explained in the Airway Routine documentation, any proposed departure which will enter another center's area within a predetermined time after takeoff (in this case, 20 minutes) requires that an intercenter message be sent to the adjoining center so that they may produce a strip to be used in coordination prior to the flight's departure. No tailoring, of course, is required on this type of intercenter message, but the Intercenter Message Routine is entered via the steps in the Tailoring Routine which stores this Table 7 address, restores the third word of remarks, if any, for the Intercenter Message Routine, and brings the Intercenter Message Routine out to the high-speed drum. It also was not considered necessary to include in this type of message any of the continuation route, as this would not be involved normally in the coordination and would be included in the intercenter message sent on departure of the flight.

If no intercenter message is to be sent, all processing for this flight is completed, for the present, and the input iteration is re-entered.

As was noted previously in the discussion of a so-called normal strip after printout, it was possible to terminate processing with an indication that all strips were printed but a continuation route which was coming had not been received; therefore, the rider strip had not been printed nor had the intercenter message, if any, been sent. When the continuation message is received, and it is recognized in the Continuation Routine that the last strip has been printed, the continuation route, the coordination fix Table 7, and other necessary tables mentioned previously are sent to Printout. A rider strip is printed for the coordination fix and a test then made to find out if this is an "over" flight. If so, all processing is completed on this flight, and the subroutine to count this fact and notify the supervisor is entered. If this Table 7 has an SDC code in it, an intercenter message must be sent. The test for time to send an intercenter message is made, as described above, and the required action taken.

A special condition exists in the case where it is time for the intercenter message. The continuation route was not on hand at the time that tailoring was performed on the original portion of

the route; therefore, the continuation route is not tailored. To remedy this, both portions of the untailored route are put on the proper working tracks, and the Tailoring Routine performs a full tailoring of both portions together before going to the Inter-Center Message Routine.

Another situation exists when a rider strip is printed for a previously printed proposed departure. In this case, as in the case where the Apreq strip on a proposed departure from another center has just been printed, no further action is required and the input iteration is entered.

One other variation exists when the Printout Routine is entered to cause a reprint of only one strip, as requested by a controller. When this strip is printed, the tests are then made to determine if this flight has a continutation route. If so, and if it is not all contained in the original route portion at this point, a rider strip is printed as previously described. When this is done, or if none is required, the input iteration is re-entered.

Formatting for the Typewriter Printout Routine: The Typewriter Printout Routine is identical in logic to the High-Speed Printer Printout Routine. That is, the same data must be formatted for each strip and received from the same sources. The strip after printing, except for some variation in print size, appears the same, with the data in the same location on the strip. The same actions occur after printout for the various kinds of strips.

Notable exceptions occur in the actual formatting of the data in preparation for printout. Unlike the High-Speed Printer, the typewriter does no formatting of its own. All characters sent to the typewriter must appear on the output tracks, starting from the left to the right, in exactly the order in which they are desired to be printed or in which it is desired that functions, such as carriage returns or tabulations, should take place. Also, nonprint characters will not cause a space to appear on the strip.

The two tracks of output data are formatted on the Block Transfer Buffer (BTB) and the General Storage Buffer (GSB). This allows the use of all three field patterns in order to facilitate locating the data properly. The fields established for the high-speed drum are such as to allow the easiest access of the

required data from the high-speed tracks. Those set up for the BTB and GSB are established for ease in placing the data in proper order. After the field patterns are established, a blockette of constants is placed on the GSB and one on the BTB. This blockette contains all of the function codes required for each blockette of data in their proper location, and the remaining characters are all nonprintable and would cause no action whatsoever on the typewriters. The function codes placed on the GSB are: tabulations, red color codes, carriage returns, upper case, lower case, and the last character on the right, a track switch. The function codes on the BTB are: tabulations, red color codes, carriage returns, spaces, and end-of-message code. The tabulations cause the typewriter to tabulate to the right until a tab stop is reached; the carriage return causes the typewriter to return to the left margin and move up one line; the red color code causes all characters after it (to the right) to be in red print until a black color code is interpreted; the upper-case symbol causes all characters after it to appear in upper case until a lower-case symbol is interpreted; the track switch causes the typewriter output tracks to switch positions, clears the typewriter to black ribbon and lower case, and continues cycling from the high order (left) of the new track; and the end-of-message code terminates the printout and clears the typewriter to a lower-case, black-ribbon condition.

With the patterns and function codes in place, the required data are now moved, one group at a time, from their fields or words on the working tracks to the proper fields on the buffers. The GSB will contain the first part of the strip data and the BTB the second part. Some movement or addition of format codes is necessary. For instance, if there are remarks with this flight plan, a series of tabulations must be placed on the BTB in front of the area containing the remarks so that they may be placed properly on the last line of print in the route section of the strip. The large print on the typewriter is such as to require a space to be inserted between each character; therefore, only six characters of large print will fit in the aircraft identification block. If seven characters are present in this field, the upper-case symbol is removed and the characters are not separated, so they will all be in lower case and fit on the strip. If it is determined that this is a west or southbound flight, the red color codes are removed and the strip appears in black print.

Omitting data normally required will leave only the nonprint codes originally inserted and cause no problem with the typewriter printout. The typewriter must interpret these codes, however, and this adds to the already slow print time. In order to eliminate as much print time as possible, the program keeps track of areas on the buffers which are not loaded with print data or needed function codes. For instance, if there is a short route of flight, most or all of the route area in the BTB may be unused. Also, there may be sections in the GSB route area not used. If the previous fix is only four characters long instead of eight, then the previous fix and previous fix time are combined into eight characters, and the other area set aside for the previous fix time is not used. In these conditions, whenever possible, after all of the required data are on the buffers the individual buffer words are moved to the left sufficiently to cover the unused words and reduce as much as possible the nonprint, nonfunction codes which must be interpreted by the typewriter. Each individual segment of route is considered to be of maximum length, and no attempt is made to eliminate the pad characters within a given segment. The steps involved would make such a procedure prohibitive.

The data on the BTB are now stored on a separate track of the high-speed drum, and the two buffers of data are sent to the output typewriter tracks and printed. The strip counter is updated by one and a test is made to determine if a duplicate strip is required. If so, the data are restored to the BTB (the original data on the BTB were destroyed by the subsequent transfer of data to the output tracks) and the required duplicates are printed, following the same testing procedure described in the High-Speed Printer Routine documentation. From this point on, the processing is the same as described in the preceding High-Speed Printer Routine documentation.

Original Entry to the Typewriter Routine: As was described under High-Speed Printer documentation, the original entry to the Typewriter Routine occurs when the High-Speed Printer goes out of operation. This condition is discovered when a strip is ready to be printed on the printer. It is also necessary, if the printer went out because of consecutive machine errors (HSP OUT ME indication), to reprint the preceding strip, which may have had invalid or incomplete data printed on it and was voided. (It should be noted here that under these conditions, the last strip printed before the error indication should have been

voided. However, in order to get this type of error indication, a second machine error must have occurred when the attempt was made to print "void" on the strip. If this second error occurred in the print cycle before actual printing had taken place, the word "void" would not have been printed.) It is desired to print the voided strip first before proceeding normally with the printout of the new strip. Therefore, the three working tracks of data for this new strip are moved to temporary storage tracks on the high-speed drum, and the corresponding tracks of data for the voided strip are put onto these working tracks from their locations in general storage. It will be remembered that, at the time of printing a strip on the High-Speed Printer, these three tracks were stored in general storage just for this eventuality. Formatting and printing of this strip then takes place in a normal manner. Immediately after printing this strip, the three tracks of data for the new strip, which were temporarily stored, are now returned to the working tracks. A subroutine, described in the Executive Routine, is entered which brings out the Printout Routine (in this case, the Typewriter Printout Routine) again to the high-speed drum, to initialize all steps in the routine, and continues with the Typewriter Printout processing from the same point that the High-Speed Printer processing was started. (The entry steps for a particular type of strip are identical regardless of which routine, Typewriter or High-Speed Printer, is being used.) From this point on, the processing continues normally, except that the strip printout occurs on the inquiry typewriter in the FLIDAP area rather than on the High-Speed Printer. This will continue until the computer receives a signal via high-speed control line (HSCL) from the inquiry typewriter in the FLIDAP area.

The operator or supervisor may activate any one of three HSCL's, designated W, X, and Y, from the inquiry typewriter. If he wishes to move the carriage manually to remove a strip from the typewriter, he will set HSCL's to X or Y. This will cause the program to wait when the next strip is ready to be printed. The printing will not take place until the control line is removed. If the supervisor wishes to resume operations on the High-Speed Printer, he will set HSCL to W. When the next strip is ready to be printed, this condition will be recognized by the computer. The typewriter in the FLIDAP area will be re-established into the supervisory printout subroutine, a message will be sent to both of the supervisory typewriters

that High-Speed Printer operations are being resumed, the constant used by the subroutine to bring out the Printout Routine will be changed to the general storage starting address of the High-Speed Printer Routine, and this subroutine will be entered. The subroutine will bring the High-Speed Printer Routine out to the high-speed drum in the same location previously occupied by the Typewriter Routine, and processing will continue with the High-Speed Printer Printout from the same point that the typewriter processing started for this strip. From this point on, normal processing continues using the High-Speed Printer Routine instead of the Typewriter Routine.

Intercenter Message Routine (Appendix XI)

This routine is to be read every time it is to be utilized. The intercenter message portion of the master program is designed to handle three types of transmissions. These are "En Route," "Proposed," and "Modification."

The only differentiation defined among these three by the program is the message "kind" code that is to be placed in the message.

Processing Narrative: The first operation of the program is to test to find out if the Output Paper Tape System is prepared to receive a message. The next is a "dummy" demand instruction to examine the unit for any special conditions caused by the last message transmitted. Machine errors are the only special conditions that can occur on the Output Paper Tape System.

If a machine error has occurred, the program will notify the supervisor of the occurrence and attempt to transmit the message a second time. If the second attempt is unsuccessful, the program will transfer the previous intercenter message to the supervisory typewriter and condition itself to bypass attempting to build any further intercenter messages until the Output Paper Tape System again goes "ready" with no special conditions prevalent. When the Output Paper Tape System becomes "ready" in a normal manner, the program will recondition itself to resume normal processing.

If the output system has sent the last message in a normal manner, the message being processed will be built on the Input/Output tracks and transmitted. The program will then advance

the intercenter message counter and test to determine if a continuation message is required. If required, the flight data portion of the continuation message will be assembled on the block transfer buffer. The program will then test for a special out having occurred on transmission of the parent message.

If a special out did occur, the program will attempt retransmission of the parent message and advise the supervisor of the occurrence. If the second transmission is unsuccessful, both the continuation message and the parent message will be transferred to the supervisory typewriter and the program will condition itself to bypass processing further messages until the output goes "ready" in a normal manner.

If no special out was caused by the parent message, the program will transfer the flight data assembled on the Block Transfer Buffer to the output track. It will then transfer the remaining route portions to the output track and transmit the continuation message.

The intercenter message counter will be incremented by one and the program will return to the Executive Routine.

Should any of the error processing described be performed, the message error counter will be advanced. If a second transmission also fails, the error counter will have been incremented twice.

Departure/Modification Routine (Appendix XII)

The Departure/Modification Routine is designed to process departure messages, with or without changes in flight data, and modification messages pertaining to en route or proposed flight plans. Changes of data in departure messages and modifications of proposal flight plans are reflected on the printed strip as well as in the intercenter message for a flight departing the area. Modifications of en route flights are reflected only by the intercenter message except when a change of route is involved. New strips are printed in this case for all fixes after the one for which the change is entered.

To permit this program to operate with the CUE and its associated routines, minor changes in coding and the addition of approximately 30 instructions are necessary. (Pages 5 and 6 of Appendix XII replace page 4 for this purpose.)

Rebuilding Flight Data Table (Table 2): At the start of the program a search is initiated for the Flight Identification Table (Table 1) for this flight using the aircraft identification and departure point as an identifier. This is followed by a series of tests for data changes and the setting of switches to process the changes. The search for Table 1 is then probed and the Table 2 address developed and stored. The setting of the data change switches are checked and where changes are required the data is assembled in the Block Transfer Buffer (BTB). A test for the first segment being direct, accomplished during this processing, is applicable only to proposals and departures. If new remarks are indicated, the old Remarks Table is erased and the address of the new table (developed by the Executive Routine) is instated in the BTB. When all data changes have been made, the revised Table 2 is written into general storage as well as placed on working track 96. If this is an en route flight without a change in route, working track 96 is left in its original state.

No Route Change: If there is no route change and the message is other than an en route kind, a test is made for proposal or departure. A departure is tested for being a one-strip flight plan, which results in the time being stored in the Fix Data Table (Table 7) and the processing directed to the Intercenter Message Routine. If it is not a one-strip flight plan, data are stored for time computation.

If the flight plan is a proposal, a test is made to determine if the departure fix strip has been printed. A negative result to this test and to a test for a change in the proposed time terminates processing. If the time has changed, the existing Clock Readout Table (Table 9) is erased and the program directed to time computation to test the new time for printing. A positive response to the previously mentioned test for the departure strip being printed results in the placing of ignores in the "time" storage to suppress comparison for time-to-print. The program is then directed to time computation.

An en route flight plan with no change in route is tested for the intercenter message having been transmitted; if not, processing is terminated. An intercenter message having been sent requires that a modification message be transmitted. This is accomplished by looping through Table 7 readouts until the coordination fix Table 7 is found. A series of instructions then assembles the data required for the intercenter message formulation and the processing is directed to the Intercenter Message Routine.

Route Change: If a route change is indicated, the altitude and speed are placed in the appropriate working storage. This is done because of the possibility of no change in these items and the resultant storage of pad codes from the modifying message. The message is then tested for being en route. If not, a test for proposed or departure results in switch settings for processing a route change for one of these message kinds. The major difference from the processing of a no-route-change message is that the Cancellation Routine is read out and the Fix-Data Tables (Table 7) are erased. From the Cancellation Routine, processing returns to the Departure/Modification Routine to load either the Direct or the Airway Routine for construction of new Table 7's.

A change in route for an en route flight results in a test for the first segment being direct, the erasure of Table 7's, and the rebuilding of new Tables 7's by either the Direct Route or the Airway Routine.

Controller Updating Equipment: When controller updating equipment (CUE) is used with the Phase 1 system, some of the functions of the Departure/Modification Routine are assumed by the CUE and the Position-Report Routines. Since change in route, type of aircraft, remarks, and speed are not handled in the CUE Routines, all incoming messages from Synchrotape typewriters and on-line teletype circuits are directed by the Executive Routine to the Departure/Modification Routine. Also, departure messages from CUE input devices are directed to this routine.

To use this program with controller updating equipment, pages 5 and 6 replace page 4 of the detailed flow charts (Appendix XII) and the entry point into the routine is D35 of page 5. A test is made for an intercenter modification message. If the result is positive, tests are made for changes in route, remarks, speed, and type. A change in route directs processing to the normal handling of a route change. A change in speed, type, or remarks sets a switch to test for the requirement of an outgoing intercenter message before going to the normal entry point. If none of these items are changed, it is assumed that the change is in altitude or time, and processing is directed to the Position Report Routine. If the message is a Synchrotape input message, the fix at which the change commences is stored for the Position Report Routine. Processing is then directed to the normal start of the Departure/Modification Routine.

If it is determined that this is a modification of an en route flight with no route change, after the reconstruction of Table 2, a test is made to see if an intercenter message for this flight has been transmitted to an adjacent center. If it has not, a switch is set to bypass the formulation of an intercenter message. If it has been sent, a switch is set to find the coordination fix, and the Table 7's for the flight are examined successively until the correct fix is found and the address stored. If the message being processed is an intercenter message modification, the first pass through the loop just discussed, a test is made for a change in time and altitude, either of which will direct processing to the Position Report Routine. If neither of these conditions is met, the loop continues until the coordination fix is found. The intercenter modification message is formulated and the Intercenter Message Routine is read in.

If the message being processed is a Synchrotape typewriter input representing a change within the area on an en route flight, but no change in route, the loop referred to in the previous paragraph is expanded to find the Table 7 address for the fix at which the change is to commence. When the correct Table 7 is found, a test is made for a change in time and altitude, either of which will direct processing to the Position Report Routine.

Continuation Routine (Appendix XIII)

The Continuation Routine provides for the processing of the balance of a flight plan route which exceeds seven segments but does not exceed 15 segments. It is based on the principle that the parent message has been processed and a partial Continuation Table constructed, prior to the entry of the Continuation Message.

Completing the Continuation Table: During the processing of the parent message, sufficient data were stored in the Continuation Table to provide the necessary links for tying the two messages together. At the start of the Continuation Routine, a search of the Continuation Index Table is initiated using the aircraft identification as an identifier. A "found" provides the address of the Continuation Table and is followed by initializing the Index Table. The location assigned to the connecting segment is transferred to a working storage location, and the continuation route is written into the Continuation Table. The flight number is modified to obtain the Flight Data Table (Table 2) address, and the starting Fix Data Table (Table 7) address of the parent message is stored in the Continuation

Table. The address of the Continuation Table is then stored in Table 2. With the Continuation Table completed, tests are made to determine the processing requirements.

Processing Requirements: The first test is for more segments of route within the center area. This is accomplished by comparing the location in which the last segment of the parent message is stored against spaces. This area will be spaces if the last segment processed for the parent message contained an outside junction fix. If no more segment processing is required, the status of the parent message is determined. If the last fix has been printed, it must be an en route message, and a rider strip is required for the last fix. Data are assembled for a rider printout and the transmission of an intercenter message. If the last fix has not been printed and the parent message is an en route type, no further processing is required. A proposal, with no more segments to process, requires a rider strip for the departure fix providing the departure strip has been printed. If the departure strip has been printed, data are assembled for a rider printout; otherwise, processing is terminated.

If the test described above indicated that there are more segments of route within the center area, the first segment of the continued route is tested for being direct. If affirmative, the Direct-Route Routine is read out onto the high-speed drum; if negative, the Airway Routine is called out. Either of the routines may share the high-speed drum with the Continuation Routine to permit the setting of switches and for utilization of parts of the Continuation Routine under special conditions.

With the correct processing routine on the high-speed drum, working storage locations are loaded to provide continuity in the construction of Table 7's. The last segment of the parent message becomes the first segment to be processed. With the working storage locations loaded, tests are made to determine the status of the parent message. The last Table 7 is examined for having been computed. If not, a test is made for kind of message. The result of this test sets switches in the Executive Routine for the correct handling after segment processing is completed. If the last Table 7 has been computed, a test is made for the strip having been printed. An affirmative on this test stores the time and places the last Table 7 address of the parent message in the storage location for the next fix address, as a flag. This flag is for the special condition of the last

junction of the parent message being the last fix in the center area. If the last strip of the parent message had not been printed, a switch in the Executive Routine is set to terminate processing after the building of Table 7's has been completed.

Cancellation and Erase Routine (Appendix XIV)

The Cancellation and Erase Routine will be read from general storage each time that it is required. Consequently, no resetting of program switches within the routine is performed.

Other portions of the program will set switches in this routine so as to utilize only certain parts of it. This narrative will deal only with the operation of the routine in processing a cancellation (C) message.

Processing Narrative: Cancellation messages may be entered from either the controller updating equipment or the FLIDAP area Synchrotape machines. Such messages from the updating equipment will always have the computer flight number to identify the records to be erased. Messages from the Synchrotape, however, may have either the aircraft identification (commercial trip number, "NC" number, and so forth) or the computer flight number. If entered with the aircraft identification, the first operation of the routine will be to search the Table 1 records to find the particular Table 1 pertaining to this flight. The address of this Table 1 is modified to become the computer flight number. The Table 9 area of general storage is searched with the computer flight number for the records pertaining to this flight. When found, the Table 9 records are erased.

The Table 1 record is then erased and the address of the Table 1 modified to obtain the general storage address of the Table 2 record. The "remarks" record address, if any, is removed from Table 2 and the "next record address" field (the D field) is tested for containing any further records. If the "next record address" field contains no address, the routine will erase the flight plan "remarks" and return to the Executive Routine.

If the "next record address" does contain a further record address, the routine will enter a program loop that removes the address of the next record and overwrites the record just tested.

The routine will continue in this loop until a "next record address" field is encountered that does not contain an address for a next record. The record containing the blank field will be erased and the routine will leave the loop to erase remarks, if any, and return to the Executive Routine.

On completion, all records pertaining to a particular flight on which a cancellation message has been entered, except Table 2, will have been erased. Table 2 is not erased as the address for an area to store a Table 2 record is obtained by modifying the address of a location at which a Table 1 record was stored. The area of a redundant Table 2, then, is automatically made available when the Table 1 record is erased.

Readout Routine (Appendix XV)

The Readout Routine is read from the general storage drum each time that it is to be used, and as a result, no resetting of program switches is accomplished within the routine.

Other portions of the master program may utilize parts of the Readout Routine. This narrative will concern itself only with the full operation of the routine in processing an R message kind.

Processing Narrative: A readout message (R) may be entered from either controller updating equipment or from a FLIDAP Synchrotape machine. The entries from the updating equipment will always contain the computer-assigned flight number for identification. Entries from the FLIDAP area, however, may contain either the computer flight number or the aircraft identification (commercial trip number, military assigned identification, and so forth). In addition, the message may request information pertaining to an individual fix posting that may or may not have been printed, or it may be a request for the next succeeding strip to be printed on an individual fix posting for a particular flight (where time-controlled release of information by the computer is employed and the flight is orbiting, the "next succeeding" strip would not have been printed). A third possibility exists that the message may be a request to print all remaining strips on the flight that are still stored in the computer.

All of the above conditions must be provided for in the Readout Routine. Following are the operations the routine performs in locating the data to be printed. Additional processing, once the data are located in general storage and placed on the high-speed drum, is performed by the appropriate routines (Time Computation, Printout, and so forth).

When the aircraft identification is used, the first operation of the routine is to locate the Table 1 record of the flight. From the Table 1 address in general storage, the Table 2 record address is developed. If the computer flight number has been used to identify the flight, the Table 2 record address is developed directly from the flight number. The Table 2 record is read from general storage and a test performed for a continuation message address being a part of the Table 2 record. If such an address exists, the message is read and the first Table 7 address is removed from it. If no continuation message address exists, the first Table 7 record address is assumed to be in the location tested in Table 2, and that address is removed.

The first Table 7 is read and a series of tests performed to determine the type of request message being processed; that is, a request for information on a particular fix posting, a request for printing of the "next succeeding" strip, or a request for printing of all remaining strips on this flight.

If the request is for a particular fix posting, the routine will enter a program loop in which it will read each succeeding Table 7 record until it finds the Table 7 for the requested fix or a Table 7 record that has not been printed. If the requested fix is found and it has previously been printed (the R message would then be a request for a duplicate strip), the Readout Routine will proceed directly to the Executive Routine, and from the Executive to the Printout Routine. If, however, an unprinted Table 7 record is encountered prior to the requested fix (determining that the requested fix has not been printed), the Table 9 record for the unprinted Table 7 will be erased and the program will proceed to the Time Computation Routine. Time Computation will then process and print all Table 7 records up to and including the record for the fix posting that was requested.

If the request is for the "next succeeding" posting over this fix for this flight, processing will be similar to the above except that the Readout Routine will continue examining Table 7

records, disregarding any Table 7's for the particular fix that have already been printed, until it has found a record that has not been printed. The routine will then proceed to the Time Computation Routine where, again, strips will be processed and printed up to and including the fix posting that was requested.

A request for a printout of all remaining strips on the particular flight will cause a consecutive examination of the Table 7 records until one is found that has not been printed. The Table 9 record for the unprinted Table 7 will be erased, and the program will proceed to the Time Computation Routine where all remaining unprinted Table 7 records on the flight will be processed and printed.

Ending Routine (Appendix XVI)

The Ending Routine is used at the end of a program run to notify the supervisor of any messages still waiting in general storage for an X kind of message to complete the required operations, and to print out the counters accumulated during the run.

Actually, at the end of a day or program run, a series of operations takes place in the Executive Routine before entering the Ending Routine. The operations within the Executive Routine insure that all data stored for some action at a future time and any messages entering the system during this period are completed immediately so that nothing is left in general storage after shutdown of the computer operation. (See "Searching the Clock Readout Table," Executive Routine documentation.)

A description of the Ending Routine is best started by a description of the processing occurring when computer shutdown is required, including the processing within the Executive Routine. An end to processing for a day may be entered in two different ways: (1) automatically, by operating up to the normal shutdown time, thus reaching the last records in the Clock Table; or (2) manually, by activating the breakpoint 1 switch on the console which forces the Clock Table to the last records. In either case, the records at the end of the Clock Table cause the ending operations to occur.

As explained in the Executive and Time Computation Routines, the three-character time factor, from the Clock Table, is used to determine what data in the Clock Readout Table

should be acted upon, and whether or not it is time to continue processing data partially completed. The time factors in the records at the end of the Clock Table consist of only one character. Each of them contains the high-order character (Ø, 1, or 2) of the time factors in the Clock Table. Any time conversion, as described under Subroutine "b" in the Executive Routine documentation, must have one of these characters in the high-order character position as a result. By searching the Clock Readout Table (Table 9, Searching Clock Readout Table, Executive Routine documentation) with each of these characters, all data presently in Table 9 will be found and all action required will be performed. Since the portion of these Clock Table records used for comparison with the actual clock time is spaces, it will never be equal to the clock time. Therefore, the tests will continue one after the other until the last Clock Table record is used. It is possible that, while operating on data found, the tests in Time Computation or Printout will result in more data being stored; however, these data will be brought out as the next record from the Clock Table is used. By the time all three of the possible high-order characters of the time factor have been used, all data stored, with one exception, have been completed. Any of these data or new messages entering the system which encounter the tests in Time Computation or Printout will be processed immediately, or will be stored and then processed when the next time factor is used. The one exception named above occurs when printout is complete on a flight plan and the time is updated and stored in the Table 9 for future erase. These newly stored data may be stored in an area in Table 9 which has already been searched, and therefore would not be found. This is not critical, as all operations are ending and the areas occupied by these records are not needed at this time.

The last of the Clock Table records contains a flag character. A check is made for this character after all searches with the time factor are complete. When this character is found, the actual Ending Routine is entered.

The Ending Routine first searches the Continuation Index Table (see Searching the Continuation Index, Executive Routine, and Continuation Routine) for any data still in this area. The supervisor may already have been alerted on data in this area. If not, an alert is sent to him. After this, both the Continuation Index and its associated Continuation Table record are erased.

When the Continuation Index is completely erased, field patterns are stored for the high-speed drum and the Block Transfer Buffer (BTB), and a series of constants containing the identifying words and function codes for the Supervisor's Ending Message are put on the BTB. By placing the required constants on the BTB and then transferring the result of each of the various counters accumulated during the day to a position on the BTB opposite the appropriate identifying word, a message is formulated.

There are actually four messages sent, although they would appear as one continuous message on the supervisor's typewriter (Fig. 25). The first contains the time and the word "END" followed by the number of messages received from New York Center (ZNY), Washington Center (ZDC), controller updating equipment (CUE), and local FLIDAP area (LOCAL), the total of all messages received, and the number of messages voided on input.

The second message contains the number of flight plans received, the number of flight plans completed, the number of messages sent to ZNY, the number of messages sent to ZDC, the total number of intercenter messages sent, and the number of CUE messages sent by the computer.

The third message contains the number of strips printed; the number of machine errors caused by the computer, High-Speed Printer, Input Paper Tape System, Output Paper Tape System, and CUE, and the total number of machine errors which occurred.

The fourth message contains the number of CUE operator errors, input operator errors, total operator errors, the number of program errors, and the number of data errors. Added to this is a notification that, if a magnetic tape is to be produced, now is the time to be sure the proper tape is mounted and that the label is put on the supervisor's typewriter.

When the above supervisor message is printed, the program run stops and the operator has the option to dump all or any desired portion of general storage onto a magnetic tape. If that is desired, the operator should now mount the magnetic tape and type in the required label to be placed on the tape as described in the operating instructions.

When restarted, the program will completely clear the following tables in general storage to spaces: Fix Data Table (Table 7), Clock Readout Table (Table 9), Remarks Table (Table 15), Continuation Table (Table 14), Continuation Index Table (Table 16), Flight Identification Table (Table 1), CUE Alert Table (Table 25), CUE Output Message Table (Table 26), and the CUE Speed Table. A bootstrap blockette and the label which was typed on the supervisor's typewriter will be written on the magnetic tape, followed by two blockettes of the Starting Routine which may be needed with the bootstrap steps to restart the next run if general storage is destroyed before time for the next run. (See Starting Routine and Operating Instructions.) The general storage areas between the parameters specified will then be written on the magnetic tape, with each blockette of data preceded by a blockette containing the general storage address of the data blockette. All search control locations between the parameters will then be put on the magnetic tape. When completed, a message is typed on the supervisor's typewriter and the magnetic tape is rewound.

Machine Error Routine (Appendix XVII)

The Machine Error Routine was developed to allow automatic recovery without loss of data in the event of certain computer machine errors. Pulses generated on the plugboard from the parity error, general storage program error, arithmetic error, and the time-out error hubs start a plugboard routine which places the current program address counter (PAK) and the current instruction revolver (IRVc) into storage. It then enters the Executive Routine Machine Error steps to store the data from the General Storage Address Register (GSAR), count the error, and bring the Machine Error Routine out from general storage.

The Machine Error Routine is divided into two main parts, the first of which initializes the Executive Routine by bringing it out of general storage, brings the Cancellation and Erase Routine out of general storage for future use, and builds an advisory message (Fig. 20) to be sent to the supervisory typewriter. The second part of the Machine Error Routine consists of a number of separate groups of steps necessary to initialize data and to recover the processing interrupted by the machine error. This routine has not been completely machine-debugged, although sufficient portions have been debugged to verify the soundness of the basic logic involved.

The message which is built for transmission to the supervisory typewriter consists of a group of constant identifying words into which the current PAK, IRVc, and GSAR data and the time are inserted. A code designating the type of error which occurred, parity error (PAR), arithmetic error (ATH), general storage program error (GSP) or time-out error (TMO), as determined by the plugboard error hubs, is also added. This message is not sent to the supervisory typewriter until after the second portion of the Machine Error Routine has added more data to identify what message was being acted upon, or if that is not applicable, what was taking place at the time of the error.

Whenever possible in the recovery phase, an attempt was made to return to the very beginning of the processing of the message concerned. Wherever possible, all routines and message data necessary to reprocess the message were restored to their working tracks from general storage.

The CUE (Controller Updating Equipment) Routine and the Readout Routine use the computer flight number (the last three digits of of the Table 1, Flight Identification Table address) to find and associate other tables with a given flight. Therefore, if the Table 1 is ever erased, all of the Table 7's (fix tables) for this flight must also be completely erased. If that is not done, the remaining Table 7's could confuse future processing, as they would contain the same computer flight number as that assigned to a later flight. It was considered impractical under certain conditions to find and erase all of the possible Table 7's built for a flight. Where this condition existed, the Table 1, instead of being erased so that it could be reused later, was destroyed with a constant which would prohibit the area from being used by any future flight. This method caused the possible Table 7's remaining for the flight to be ignored in all future processing. The number of machine errors encountered during a day's run within these areas should never be great enough to cause a problem by crowding storage areas.

At various points throughout the master program, codes are set into a machine error code storage location within the portion of the Executive Routine that is never initialized. A new code is placed in this position whenever a significant change takes place either to the data being processed or to the processing being performed. This code is used by the Machine Error Routine to

determine the proper starting point within the second part of this routine to accomplish the required recovery. The following discussion covers each of the various codes (recovery starting point) which may be encountered. Just prior to entering this recovery point, the flight data portion of the last message received is brought out of general storage for possible use by the recovery portion.

505: A machine error occurring while this code is in storage must have occurred during the input portion of the Executive Routine before the input data have been stored and before a new message has been requested. The word "INPUT" is added to the supervisor's message. Part or all of the input message may have been brought in, but a new request for the next message has not been sent to the input unit. Tests are made to determine which portion of the input message is presently available to the computer and whether or not the message contains remarks. The input track is then switched, if necessary, to establish its condition as it was at completion of its entry from the input unit buffer. The supervisor's message is now sent to the supervisory typewriters and the Executive Routine is re-entered at the beginning to begin processing the same input message again. All input/output to computer control lines originally activated are still active and the tracks are in their original condition.

The test for proper switching of the input tracks is accomplished by testing for a space in the second character of the first word. If anything other than a space is present, the flight data portion of the message is available to the computer. The second character position of the first track of any message is always a character other than a space, while that position on the second track is always a space.

If breakpoint 1 is set on the supervisor's console, a search of Table 9 (Clock Readout Table) may be taking place preparatory to entering the Ending Routine. In this case, the tests for track position will be meaningless, but re-entry to the beginning of the Executive Routine will again pick up the breakpoint indication and restart the Table 9 search.

515: This code is set by the input error portion of the Executive Routine. The input unit has been instructed to bring in a new message. Part of the input error message to the supervisor has been built and temporarily stored on track 96 in the computer. At this recovery point in the Machine Error Routine, the word

"INPUT" is added to the supervisor's machine error message and the message is sent to the supervisory typewriters. The partial input error message stored on track 96 is now replaced in its original position on the Block Transfer Buffer. The input error portion of the Executive Routine is re-entered to complete and send this message to the supervisor. If the machine error occurred after the message had been printed on a supervisory typewriter, a second message identical to the first will be printed on that typewriter.

520: While this code is set, both parts of the input message have been placed in general storage and the input unit has been requested to bring in a new message. Recovery from an error while this code is present consists of placing the aircraft identification from the flight data, brought out of general storage during the first part of this routine, onto the supervisor's message and sending the supervisor's message. Then the original two portions of this input message are brought from general storage to the proper working tracks, and the whole processing is restarted from the point in the Executive Routine following the request for a new input message. A test is made for remarks on the message so that proper restorage of remarks will take place. The general storage address of the remarks previously stored for this message is lost and the area will be ignored.

530: This code is set at the start of flight plan processing and before building of the required tables. If a machine error occurs while this code is set, the aircraft identification is added to the supervisor's machine error message. Until Table 1 is built and stored, no tables have been built. The supervisor's machine error message is sent and the original input message is restored to its original working tracks from general storage. Processing is restarted as described above under code 520.

After Table 1 is built and stored, it is assumed that any number of Table 7's (Fix-Data Tables) may have been built. Rather than attempt to find all of the Table 7's which may have been built (they may not be sequentially connected at this time) and erase them, the Table 1 is destroyed with a constant which will render the record area unusable for future messages. Any Table 7's which may have been built will contain this computer flight number, and therefore will be ignored for the rest of this day's run. The error message is now sent to the supervisor, and processing for this flight plan is restarted from the Executive Routine as described above under code 520.

540: This code is set after all preliminary processing is completed on any flight plan, whether it is en route, proposed, departure, modification or continuation, and just prior to entering the Time Computation Routine to compute the time for the first strip. All of the Fix Data Tables (Table 7's) are now built and the Continuation Tables, if any, are stored. The processing track 97, with the data adjusted as necessary for time computation, is stored in general storage. This code remains set throughout the Time Computation, Tailoring and Printout Routines until the Time Computation Routine is re-entered to compute the time on the next strip or until the address of this first strip is stored in Table 9 (Clock Readout Table) for future printout.

In the event of a computer machine error during this period, the aircraft identification is added to the supervisor's machine error message and the message is sent to the supervisory typewriters. Track 97 data, prepared for time computation, are brought out of general storage and replaced on track 97, Table 2 (Flight-Data Table) is brought out of general storage to its processing track 96, and the Time Computation Routine is re-entered at the start.

550: This code is set when the Cancellation and Erase Routine is entered for the purpose of cancelling a flight plan as instructed by a cancellation message just received. If, at the time of the error, the Table 1 address has not been put into working storage (975), then the erase processing loop has not started. The original input message is brought from general storage and processing restarted from the Executive Routine, as described under code 520, above. If, however, the Table 1 address is in 975, then at least part of the erasing of tables may have started and the sequential addressing of this flight's tables has been disrupted. Restarting would cause any Table 7's not originally erased to be left in storage undisturbed and with a computer flight number which will be assigned to another flight in the future. To prevent this, the Table 1 for this flight is destroyed. Any Table 7's not erased will be ignored from this point on. The aircraft identification is added to the supervisor's machine error message. This message is sent and the CUE (controller updating equipment) test portion of the Executive Routine is entered to continue normal processing.

555: This code is set when entering the Continuation Routine and remains until the rider strip is printed and the Intercenter Message Routine is entered, or until the Time Computation Routine is entered to compute the first strip built for the continuation route.

If the Continuation Index Record stored by the parent message is still intact, no new tables have been built. The aircraft identification is added to the supervisor's machine error message, the message is sent, the input message data are brought out of general storage, and processing is restarted from the Executive Routine as described under code 520, above. If, however, the Continuation Index has been erased, more processing is necessary to initialize the data and recover properly.

In the continuation route processing, after finding and erasing the Continuation Index Record for this flight, the continuation route is stored in the Continuation Route Table Record set aside for it. The data originally in that record are removed and stored on the high-speed drum. If a machine error occurs, and it is determined that the Continuation Index Record has been erased, a test is made to determine if these original data have been removed from the Continuation Route Table and stored. If so, the data are replaced from storage to the Continuation Route Table to be initialized for reprocessing.

Additional Table 7's may have been built, and it becomes necessary to find and erase all of these tables before rebuilding new ones, so that no redundant Table 7's are left containing this computer flight number. It is obviously not possible, in this case, to destroy Table 1 and restart, as is done in other areas because this is a continuation of a flight plan previously received. As the error may have occurred in the middle of building strips for a segment, complete continuity would not be established to all of the tables, and a simple sequential erase of tables is not possible.

If the starting Table 7 address for this flight has been stored, a sequential erase of tables is performed, starting at this address, to erase all tables completed prior to the segment being built at the time of the error.

The addresses of the remaining Table 7's built, but possibly not sequentially connected to those erased above, may be found in one of two possible locations. To eliminate the complications inherent in any attempt to determine which of the two contains the pertinent addresses, both conditions are checked and the data found at any of the addresses are erased, even though they may have been previously erased in the erase sequence above.

The last Table 7 built in airway processing is connected sequentially with any other Table 7's within its segment of route and its address is stored. If an address in this storage location is other than the address of the last Table 7 of the parent message, an erase sequence may be started from this address which will erase all Table 7's built in an airway route segment whose processing was interrupted by the machine error. A possibility, inherent in the continuation route processing, exists that the address of the last Table 7 of the parent message is in the next fix Table 7 address location of the first Table 7 of the continuation route portion. If this condition exists, only this one Table 7 of the continuation route has been built and it is now erased.

In direct-route processing, the Table 7 addresses built in a direct-route segment are stored in a Sequence Table on the high-speed drum until the segment is complete. When the Continuation Routine is brought from general storage to the high-speed drum, the first record area of the Sequence Table location is overwritten with spaces. If a machine error occurs after a direct-route segment processing has built one or more Table 7's, the addresses of these Table 7's will be in the Sequence Table with a flag constant indicating the end of the Sequence Table. In this machine error recovery process, the Sequence Table is checked sequentially, and data are erased from any tables whose addresses are in this table.

When this process is completed, the supervisor's machine error message, including the aircraft identification, is sent and the original input tracks, as stored on input, are restored to processing tracks 96 and 97. The Continuation Routine is brought out of general storage to the high-speed drum and is re-entered at a point immediately following the erasure of the Continuation Index. Reprocessing resumes from this point.

580: This code is set whenever the Cancellation Routine is entered to erase the original Table 7's of a flight plan whose route is being changed. A Departure or Modification Message has been received which contains a change in route for a previously processed flight plan. If a machine error occurs after the Cancellation Routine is entered, all of the original Table 7's may not have been erased and the sequential addressing may have been broken, making it impossible to redo a normal erase sequence. It is not possible to simply destroy the Table 1, in this case, as the processing for a modification message does not build a new Table 1. The old Table 1

and Table 2 are therefore removed from their original locations and restored into new locations where they will be found when this modification message is restarted. The old Table 1 location is now destroyed. The reprocessing of the modification message will assign a new computer flight number. Therefore, any Table 7's remaining in storage containing the old computer flight number are ignored.

The Table 1 data are added to the supervisor's machine error message, the message is sent, the input message is restored to its working tracks, and processing is restarted for this message as described under code 520, above.

600: This code is set during the portion of the Executive Routine which searches the Continuation Index Table 9 (Clock Readout Table) for data requiring action. The code remains set until data found in Table 9 are stored and the record erased, or until the input processing portion of the Executive Routine or the Ending Routine is entered. In order to insure a complete search of Table 9 with the time being used at the time of machine error, the Clock Table Address is backdated two records and brought from general storage. The next Table 9 search may only complete the search started at the time the error occurred. The next Clock Table Record is then used, and from that point on, the processing is normal starting from the Clock Table Record below that originally being used when the error occurred. This should insure that no data were missed in Table 9 because of the error.

The time flag, used to determine if the Continuation Index has been searched during this minute, is destroyed. This will cause another search to take place immediately when processing is resumed.

The word "search" is added to the supervisor's machine error message, the message is sent, and the processing is resumed starting with the Continuation Index search.

605: This code is set when a record found in Table 9 and requiring action is stored on the high-speed drum and erased from general storage. The high-speed drum location containing this record remains constant until the tables are brought out of storage for processing. It is then changed to the Table 7 address.

If this storage location does not yet contain a Table 7 address, the word "search" is added to the supervisor's message, the message is sent, and processing is restarted from the point where this error code was set. If, however, the storage location does contain a Table 7 address, this Table 7 is brought out of storage, the Table 1 data for this flight are added to the supervisor's machine error message, the message is sent, and processing is restarted from the subroutine which brings out the tables for printout or ICM (intercenter message). This code remains throughout the Tailoring and, if pertinent, the Printout Routine until the Intercenter Message Routine is entered, until the Time Computation Routine is entered for the next strip, or until all processing is completed and the CUE test portion of the Executive Routine is entered.

If the error had taken place after the part of the Printout Routine which causes the printout of the strip, a second strip duplicating that just printed will be produced.

615: This code is set upon entry to the Intercenter Message (ICM) Routine from the Tailoring Routine and remains until the CUE test portion of the Executive Routine is re-entered. Recovery from a computer machine error during this phase consists only of bringing out of general storage the Table 7 being sent, adding the Table 1 data to the supervisor's machine error message, sending the message, and restarting processing from the subroutine which brings out the tables for the ICM. If the error should occur after the point in the ICM Routine which causes the sending of the intercenter message, a second intercenter message, duplicating the first, will be sent.

620: This code is set after the printout of the first strip in a series and entry into the Time Computation Routine for the next strip. It remains set throughout the Time Computation, Tailoring, and Printout loop until a strip is stored in Table 9 for future printout, the Intercenter Message Routine is entered, or until all processing is completed and the CUE test portion of the Executive Routine is entered.

The Table 1 data are added to the supervisor's machine error message and the message is sent. The Time Computation Routine is brought out of general storage. If the strips being printed are the result of a strip readout request message, a switch would have been set in Time Computation by the Readout Routine to determine when the strip requested is reached. In

case this condition may exist, this switch setting is saved, and after the Time Computation Routine is brought out of general storage, the switch is set to its condition at the time of the machine error. Processing now proceeds, starting from the subroutine which will bring out the tables required for this strip. If the error should occur after the printout of a strip, but before the Table 7 address in storage had been changed to the next address, a duplicate of the previously printed strip would result.

If the error should occur after the strip requested by a readout message has been recognized and the switch in Time Computation normalized, but before the strip is printed, the requested strip will not be printed and must be requested again.

630: This code covers the error processing subroutine and remains set until the Cancellation Routine is entered to erase the tables processed or until the normal processing is re-entered.

The word "error" is added to the supervisor's machine error message, and a test is made to determine which of the two major parts of the error processing is to be performed. The error codes inserted when the improper condition was discovered are arranged so that any code greater than 200 requires one portion and any code less than or equal to 200 requires the other portion. The machine error message is sent and the error processing is restarted at the proper point, depending on a test of the error code.

635: This code is set during the Ending Routine processing. The word "ending" is added to the supervisor's machine error message, the message is sent, the Ending Routine is brought from general storage, and processing restarts at the start of the Ending Routine.

640: When a record is found in Table 9 indicating time to erase the data on a previously processed flight, this code is set. If a machine error occurs during this time, all of the Table 7's may not have been erased. In order to assure that no future flight plan will have the same computer flight number remaining on the Table 7's un-erased, the Table 1 area is destroyed with a constant which insures that the area will not be reused. The word "erase" is added to the supervisor's machine error message and the message is sent. The CUE test portion of the Executive Routine is re-entered to continue normal processing.

643: In the error subroutine, if an error exists which prohibits further processing of a flight plan because of certain data errors, the tables built on this flight are erased from general storage. It is possible that all of the Table 7's are not sequentially tied together at the time of the error and, therefore, are not all erased. In order to insure that these remaining Table 7's will not be confused with some future message, the Table 1 for this flight is destoyed so that it cannot be used. No future message will contain this same computer flight number. Right after this table is destroyed, machine error code 643 is set.

No recovery is required from an error in this area, as the Table 1 is already destroyed. The word "erase" is added to the supervisor's machine error message, the message is sent, and processing returns to the normal CUE test portion of the Executive Routine.

646: This code is set when entering the CUE test portion in the Executive Routine, and remains set until the Executive Routine is re-entered to process a message received from CUE or until the Continuation Index search portion of the Executive Routine is entered. If a machine error occurs in this portion of processing, the word "CUE" is added to the supervisor's machine error message, the message is sent, and the CUE test portion of the Executive Routine is re-entered. No message recovery is attempted; therefore, any CUE message on which processing had been started when the machine error occurred would not be processed and would have to be re-entered.

650: This code is set in the Position Report Routine when a time update message has been received and the updating of the time in the Table 7's has started. The contraction "PSN REPORT" and the aircraft identification are added to the supervisor's machine error message and the message is sent. No message recovery is attempted for an error in this area at this time, as the times in the Table 7's may or may not have already been updated the required amount and no method is presently programmed to determine which ones have and have not been updated. Processing is restarted from the normal CUE test portion of the Executive Routine. The supervisor now knows the flight which was being updated at the time of the error. In order to eliminate the now invalid Table 7's and restore proper data on this flight, a route modification message on this flight must be entered containing the original route from

the point of the time change and the new time. This will cause all of the old Table 7's to be erased and new ones to be built, thus producing new strips containing the new time for each remaining fix in the area over which the flight will pass. If the intercenter message for this flight has been sent, a route modification intercenter message with the new time will be sent.

Main Frame Plugboard (Appendix XVIII)

Following is a detailed narration of the main frame computer plugboard subprograms. The Tracker Utility Routine, wired from breakpoints 1, 2, and 3 through the select side of alternate switches 2, 3 and 4, respectively, and utilizing steps 84 through 90 and steps 92 and 95 of the main frame plugboard, is not included in the following narratives. A complete description of this routine is contained in a memorandum report previously published (see bibliography).

Plugboard Start (Fig. 31): The purpose of this step is to vary the pulse from the start hub after depressing the computer clear and start buttons. Normally, alternate switch 1 is left in the nonselect position during operation, and if the operator depresses the computer clear and start buttons, the high-speed drum is reloaded and control is returned to the start of the internal program. If alternate switch 1 is in the select position and the operator depresses the computer clear and start buttons, the program continues at the next internal instruction specified by the program address counter. This is found to be useful in program debugging and in the use of utility programs.

Transfer Subprogram from Drum to Working Storage: (Fig. 32): Instruction word 180 specifies a transfer to external control of the program at program step 56 by coding 56 in the operation code. Instruction word 180 also specifies the location of the drum start address of the subprogram, the first location of working storage to be loaded and the address to vary the program when the load operation is complete. Program step 56 transfers the drum start address specified by V of the instruction revolver to the General Storage Address Register, and reads the data at that location into the General Storage Buffer. Step 57 adds two to the current instruction revolver at the operation code location and stores the result in the next instruction revolver. This is accomplished to establish a loop

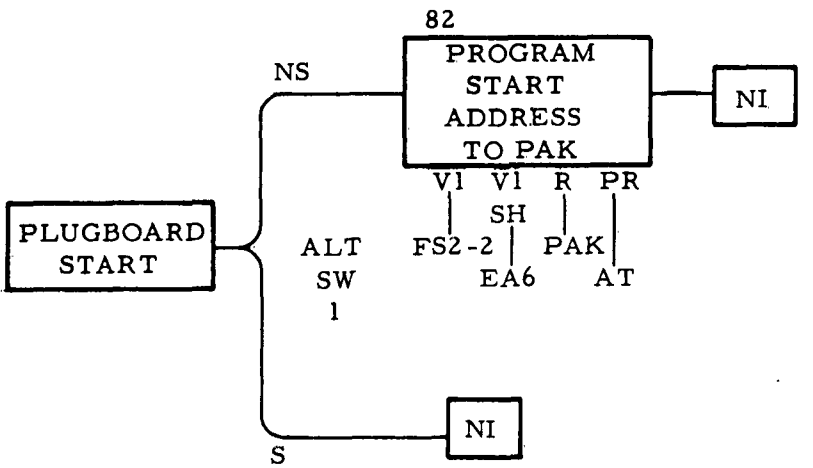

FS2-2-1Ø 198 379 187 1

FIG. 31 PLUGBOARD START

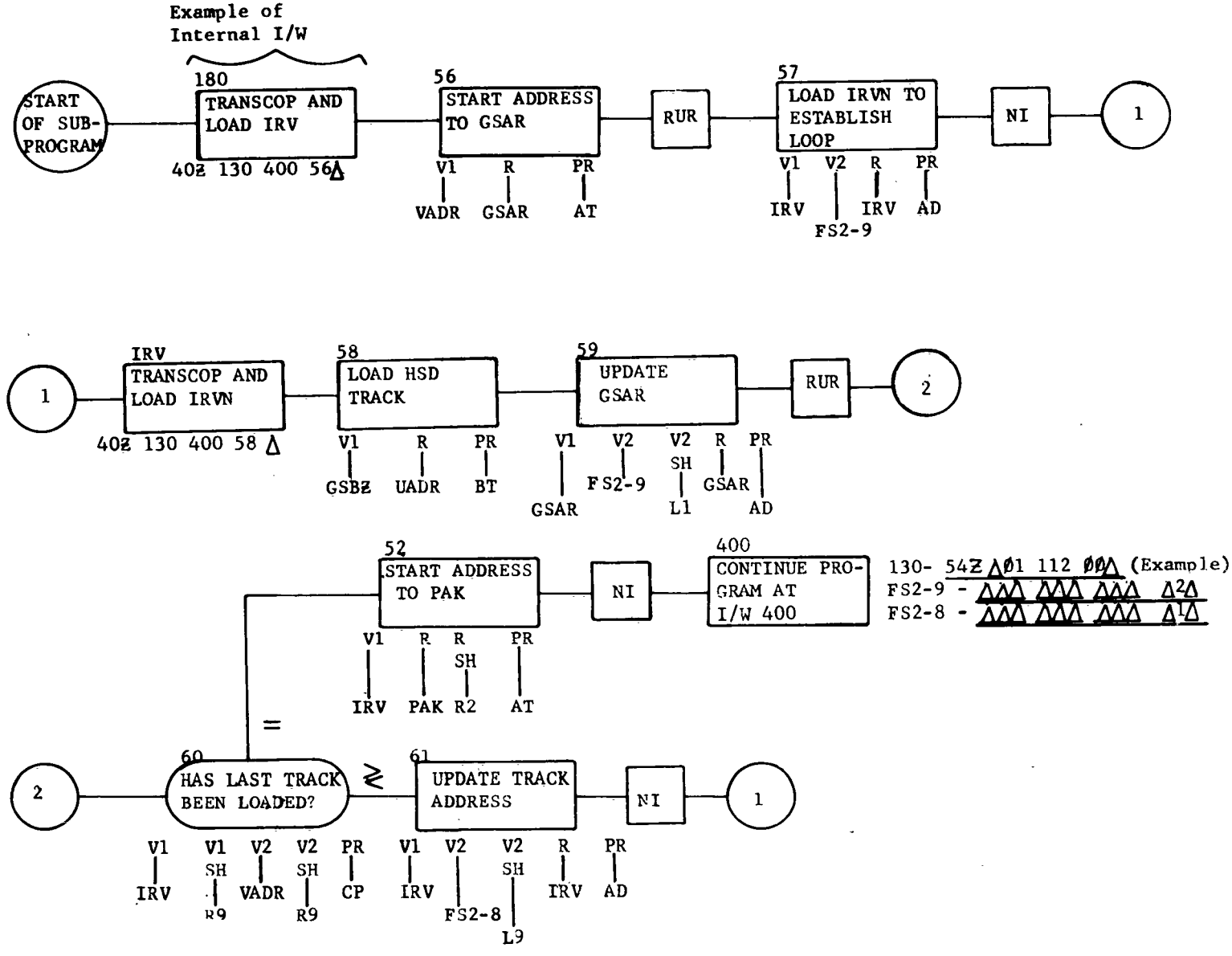

FIG. 32 TRANSFER ROUTINE FROM DRUM TO WORKING STORAGE

in the program. The program continues at the next internal instruction already contained in the instruction revolver. This instruction transfers control of the program to the plugboard at step 58. Step 58 transfers the data in the General Storage Buffer to the location specified by V of the instruction revolver. The out hub of step 58 is wired to the in hub of step 59. Step 59 updates the General Storage Address Register and reads the next block of data from drum. Step 60 determines if the complete subprogram has been transferred to working storage. The out hub of step 60 is wired to the in hub of branch 4. The plus and minus hubs of branch 4 are wired to the in hub of step 61, which updates the address of the working storage location and continues loading the subprogram by returning to program step 58. The zero hub of branch 4 is wired to step 52, which loads the start address of the subprogram into the program address counter, indicating that the complete subprogram has been loaded. Control of the program is then transferred to the first internal instruction of the loaded subprogram.

Load Field Patterns (Fig. 33): Instruction word 180 transfers control of the program to the plugboard at step 69 and loads the instruction revolver with the general storage address for the first pattern. Step 69 transfers the first pattern address to the general storage address register. This is accomplished by adding the instruction revolver with a right shift 2 to the instruction revolver with a right shift 11, and the result is stored in the General Storage Address Register (0119680). The out of step 69 reads the pattern into the General Storage Buffer and goes into step 70. Step 70 transfers the data in the General Storage Buffer to the appropriate pattern location (in this case, the intermediate storage pattern, since selector 12C is in the nonselect position). The out of step 70 is wired to the common of selector 12D which, in the nonselect position, picks up selectors 12 and 24 and returns to step 69 to load the second pattern. The values of step 69 are now on the select side of the selectors, and the process

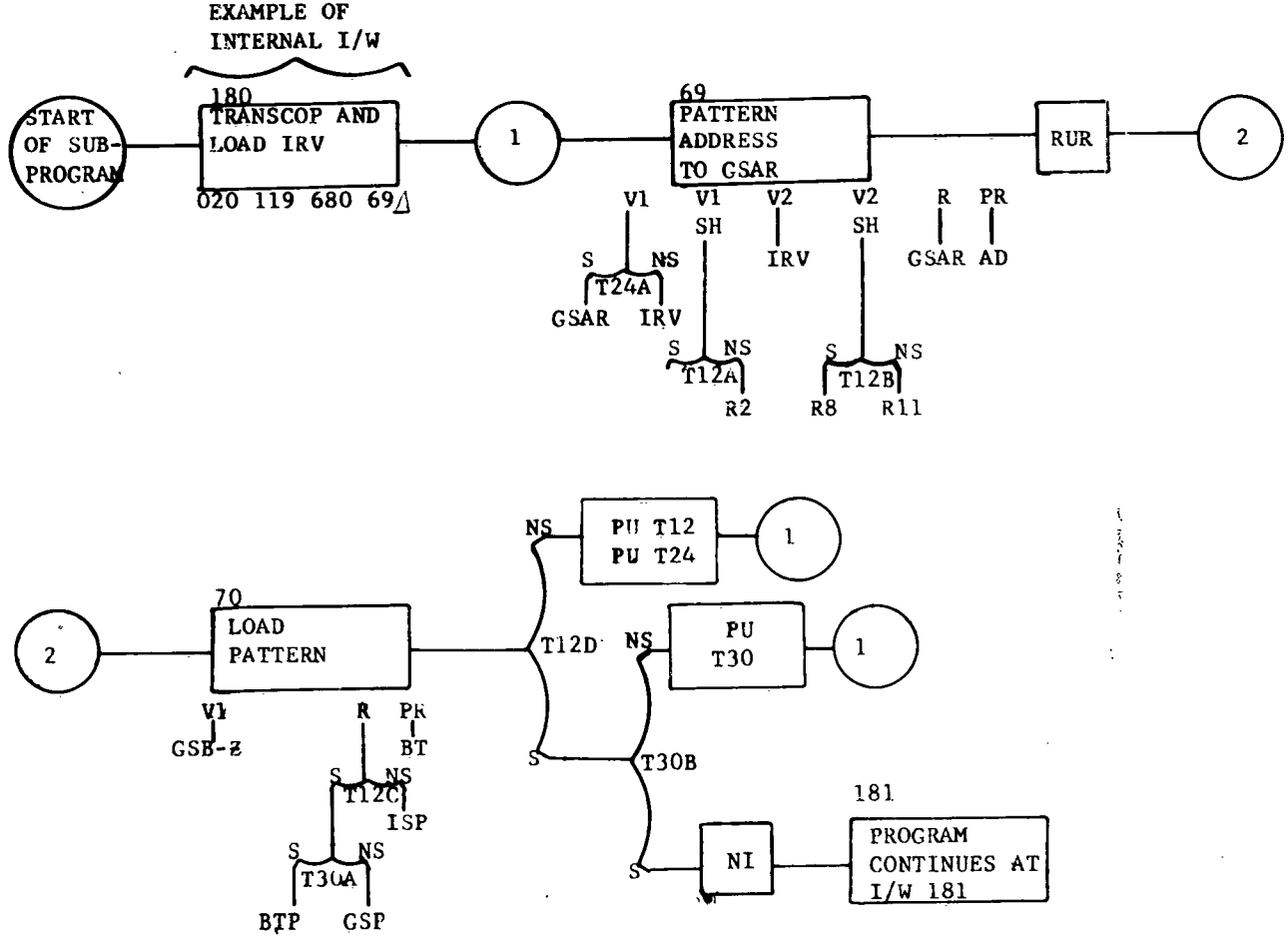

FIG. 33 LOAD FIELD PATTERNS

merely adds 20 to the general storage address for the next pattern. Step 70 transfers the data in the General Storage Buffer to the general storage pattern location and the out of step 70 goes to common selector 12D. The select side of selector 30B which, in the nonselect position, picks up selector 30 and returns to step 69 to load the last pattern. Step 69 updates the general storage address by 20 and step 70 transfers the data in the General Storage Buffer to the block pattern location. The out of step 70 goes through the select sides of selectors 12D and 30B, which are wired to the next instruction hub. The program continues at the next internal instruction (in this case, 181). The program requires the patterns in general storage to be written in successive locations and in the order of which they are loaded.

Compare for Positive Result (Fig. 34): Instruction word 180 transfers control of the program to program step 71 by coding 71 in the operation code location. Instruction word 180 specifies the locations of the data to be compared and the address to vary the program if the positive condition is met. Step 71 of the plugboard compares the data specified by the address of U of the instruction revolver to that specified by V of the instruction revolver. The out hub of step 71 is wired to the in hub of branch 2. The plus hub of branch 2 is wired to the in hub of step 52, which transfers the instruction revolver to the program address counter with a right shift 2, indicating that the positive condition has been met, and the program continues at the internal instruction specified by W of the instruction revolver (200). The minus and zero hubs of branch 2 are wired to the next instruction hub, indicating that the positive condition has not been met, and the program continues at the next internal instruction word (181). If the programmer desires to shift the data in the location specified by U or V of the instruction revolver prior to the compare operation (step 71), he must load the shift revolver with the appropriate shift prior to transferring control of the program to the plugboard (instruction word 180).

Compare for Negative Result (Fig. 35): As illustrated in Fig. 35, instruction word 180 transfers control to the plugboard at program step 51 by coding 51 in the operation code location. Instruction word 180 also specifies the locations of the data to be compared and the address to vary the program if the negative condition is met. Step 51 compares the data at the location specified by U of the instruction revolver to that of the location specified by V of the instruction revolver. If shifting of the data specified by

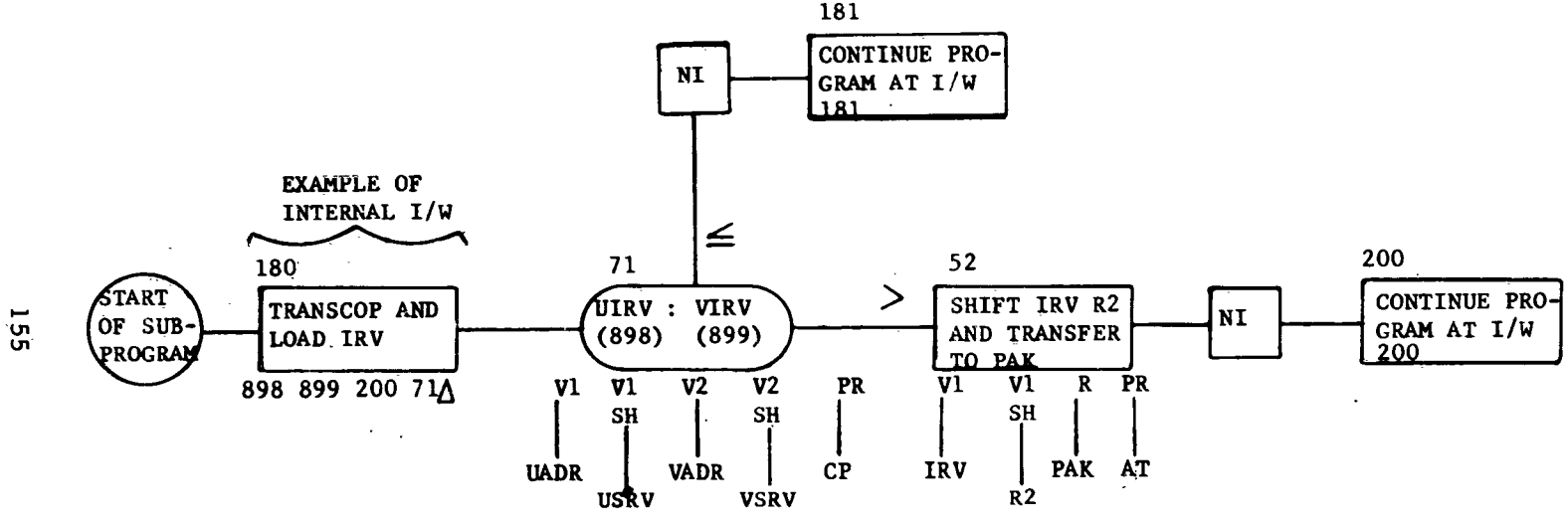

155

FIG. 34 COMPARE FOR POSITIVE RESULT

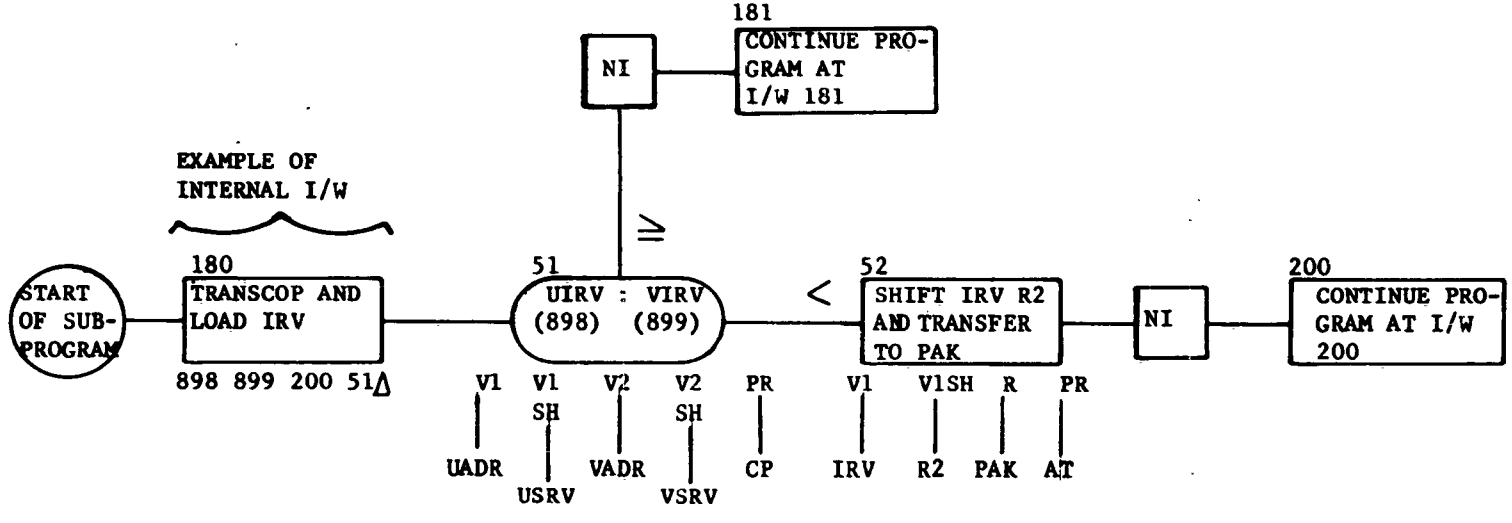

FIG. 35 COMPARE FOR NEGATIVE RESULT

U and V is desired, the programmer must load the shift revolver with the appropriate shift prior to transferring to external control (instruction word 180). The out hub of step 51 is wired to the in hub of branch 1. The plus and zero hubs of branch 1 are wired to the next instruction hub, which transfers control of the program to the next internal instruction (181) if the negative condition is not met. The minus hub of branch 1 is wired to the in hub of step 52. Step 52 transfers the contents of the instruction revolver to the program address counter with a right shift 2, and the out hub of step 52 is wired to the next instruction hub. The program varies according to the location specified by W of the instruction revolver if the negative condition is met.

Compare for Equal Result (Fig. 36): Instruction word 180 transfers control of the program to the plugboard at program step 91, and specifies the addresses of the data to be compared and the address to vary the program if the equal condition is met. Plugboard step 91 compares the data at the location specified by U of the instruction revolver to that of the location specified by V of the instruction revolver. The out hub of step 91 is wired to the in hub of branch 3. The plus and minus hubs of branch 3 are wired to the next instruction hub, indicating that the equal condition has not been met, and the program continues at the next internal instruction word (in this case, 181). The zero hub of branch 3 is wired to the in hub of step 52, indicating that the equal condition has been met. Step 52 transfers the instruction revolver to the program address counter with a right shift 2, and the program continues at the internal instruction word specified by W of the instruction revolver (in this case, 200). If the programmer desires to shift the data to be compared, he must load the shift revolver prior to transferring control of the program to the plugboard (in this case, prior to instruction 180).

Transfer One Word of Data and Vary the Program (Fig. 37): Instruction word 180 specifies the source and destination location of the data to be transferred and the address to vary the program when the transfer operation is complete. Instruction word 180 transfers control of the program to external control at plugboard step 53. Step 53 transfers the data specified by U of the instruction revolver to the location specified by V of the instruction revolver. The out of step 53 is wired to the in of step 52 which transfers the instruction revolver to the program address counter with a shift of right 2. The program continues at the internal

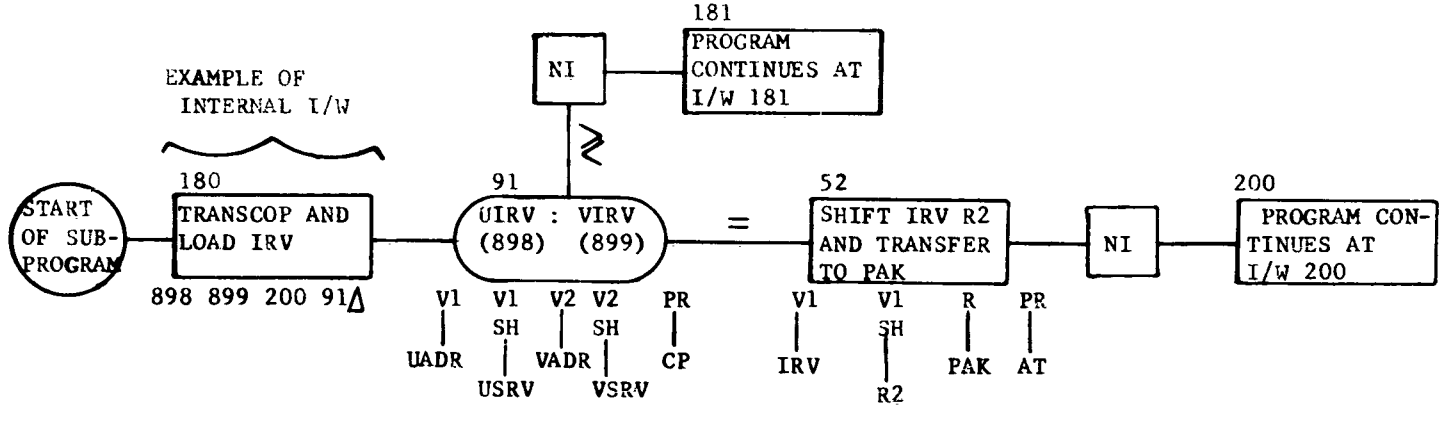

FIG. 36 COMPARE FOR EQUAL RESULT

instruction word specified by W of the instruction revolver (in this case, 200). If the programmer desires to shift the data he is transferring, he must load the appropriate shift in the shift revolver prior to transferring control of the program to the plugboard (instruction word 180).

Shift and Transfer One Word of Data (Fig. 38): Internal instruction word 180 specifies a transfer to external control at plugboard step 54 by the coding 54 Δ . Instruction word 180 also specifies the source and destination location of the data to be transferred and the type of shift desired. Plugboard step 54 transfers the instruction revolver to the shift revolver, and the out hub of step 54 is wired to the in hub of step 55. Step 55 accesses the data at the location specified by U of the instruction revolver (898) and shifts it according to the coding in W of the shift revolver (105 right end around 5). Step 55 then stores the shifted data in the location specified by V of the instruction revolver. The out hub of step 55 is wired to the next instruction hub, and control of the program continues at the next internal instruction word (181).

Load the General Storage Buffer and Vary the Program (Fig. 39): Instruction word 180 transfers control of the program to the plugboard at step 75, and specifies the block address of the data to be read into the General Storage Buffer and the address of the General Storage Buffer to continue the program. Plugboard step 75 transfers the instruction revolver with a right end around shift 5 to the General Storage Address Register. The out hub of step 75 is wired to the in hub of the read unit record, which reads the data into the General Storage Buffer, and then continues the program at plugboard step 52. Step 52 transfers the instruction revolver to the program address counter with a right 2 shift. The out hub of step 52 is wired to the next instruction hub which transfers control of the program to the internal instruction of the General Storage Buffer specified by W of the instruction revolver. The programmer may read up to ten instructions from the drum to the general storage buffer by coding the appropriate unit record length code in the low-order position of the transcop instruction (in this case, instruction 180). If breakpoints are used in the program, the programmer must be careful not to use the characters which specify those particular breakpoints.

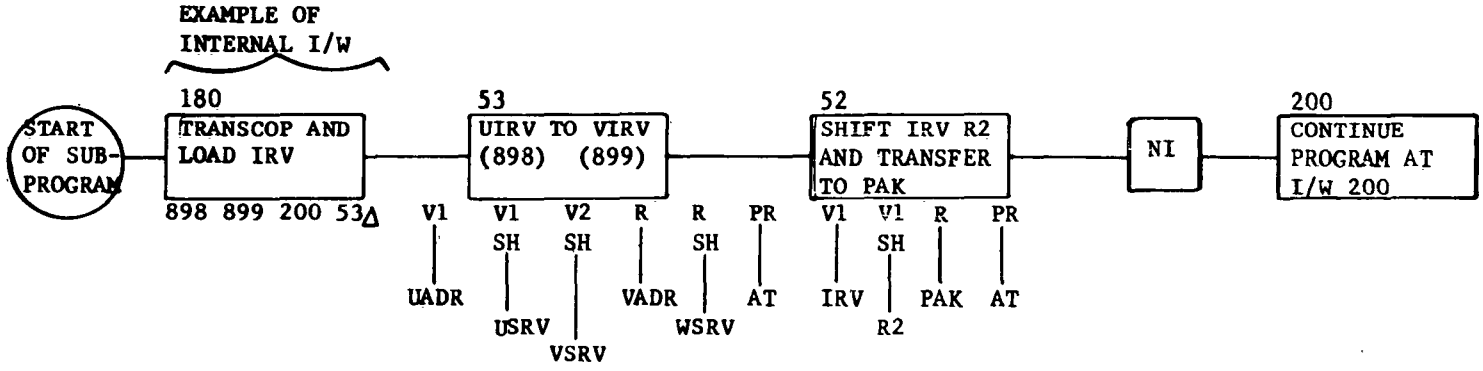

FIG. 37 TRANSFER ONE WORD OF DATA AND VARY THE PROGRAM

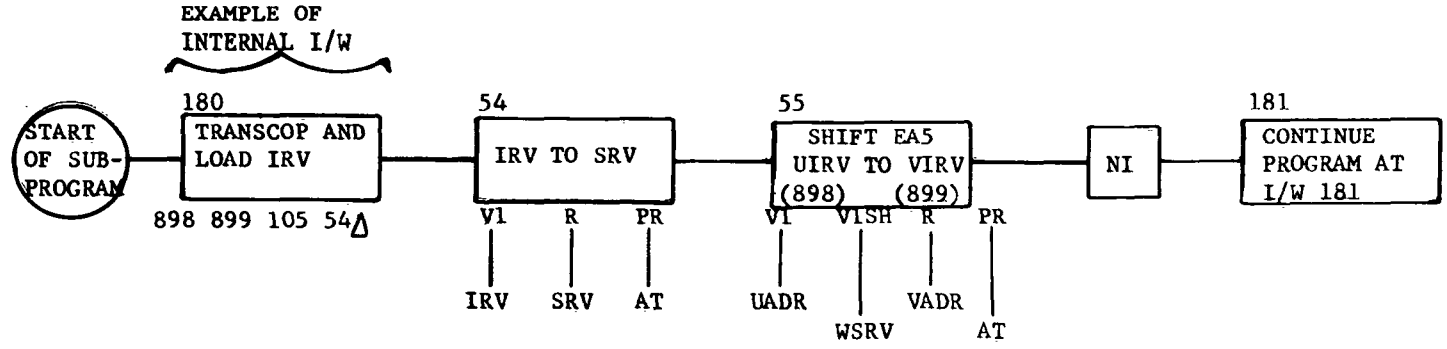

FIG. 38 SHIFT AND TRANSFER ONE WORD OF DATA

Transfer One Block of Data and Vary the Program (Fig. 40): Instruction word 180 transfers control of the program to the plugboard at program step 83, and specifies the source and destination locations of the data to be transferred and the address to vary the program when the transfer operation is complete. Program step 83 accesses the block of data at the location specified by U of the instruction revolver and transfers it to the location specified by V of the instruction revolver. The out hub of step 83 is wired to the in hub of step 52, which transfers the instruction revolver to the program address counter with a right shift 2. The program returns internally at the address specified by W of the instruction revolver.

Determine Message Kind (Fig. 41): Instruction word 246 transfers control of the program to the plugboard at step 73 and specifies the address where the message kind is located. Step 73 adds spaces to the message kind and stores the result in the code distributor register. The reason for this is to eliminate transferring a space code to the code distributor register, which would hang the computer with an invalid character in the code distributor register. The out of step 73 is wired to the code distributor pulse in hub. Code distributor pulse-out hubs 3, 7, and 9 indicate that this is a C, X, R, or P type message and pick up selector 44 before going to step 74. Code distributor pulse-out hubs Ø, 1, 2, 6, and 8 indicate a character other than the eight message types, and step 74 transfers the error routine address to the program address counter before returning to the internal program. Code distributor pulse-out hubs 4 and 5 indicate that message type is either E, N, D, or M and pick up selector 32 before going to step 74. Step 74 transfers the address of the internal program to the program address counter specified by the kind of message. The out of step 74 is wired to the next instruction hub, and control of the program returns to the internal instruction specified by the program address counter.

Square Root Routine (Fig. 42): The purpose of this subprogram is to determine the mileage between the entry fix and junction fix when processing direct-route flight plans, including routes expressed by direct point to point, latitude-longitude, rho-theta, and distance and direction. The entry of this routine is a transfer from internal control to external control at internal instruction word 735. Instruction word 735 transfers control to the plugboard at program step 63. Program step 63 divides delta X^2 (the difference between the entry fix X coordinate and the junction fix X coordinate, squared) plus delta Y^2 (the difference

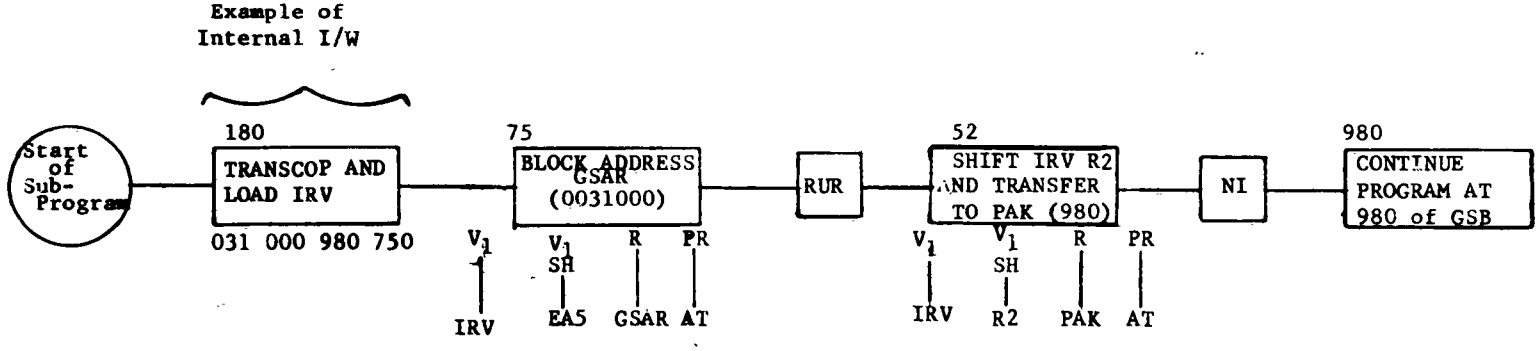

FIG. 39 LOAD GENERAL STORAGE BUFFER AND VARY THE PROGRAM

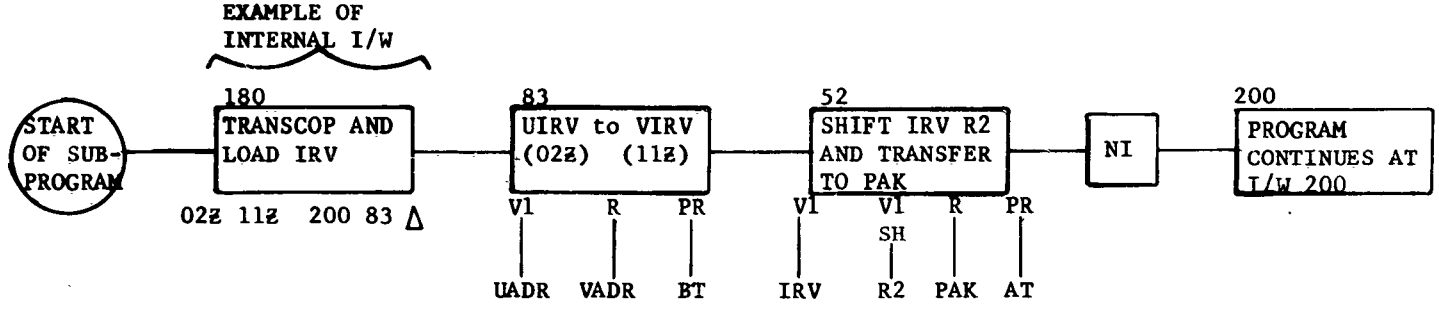

FIG. 40 TRANSFER ONE BLOCK OF DATA AND VARY THE PROGRAM

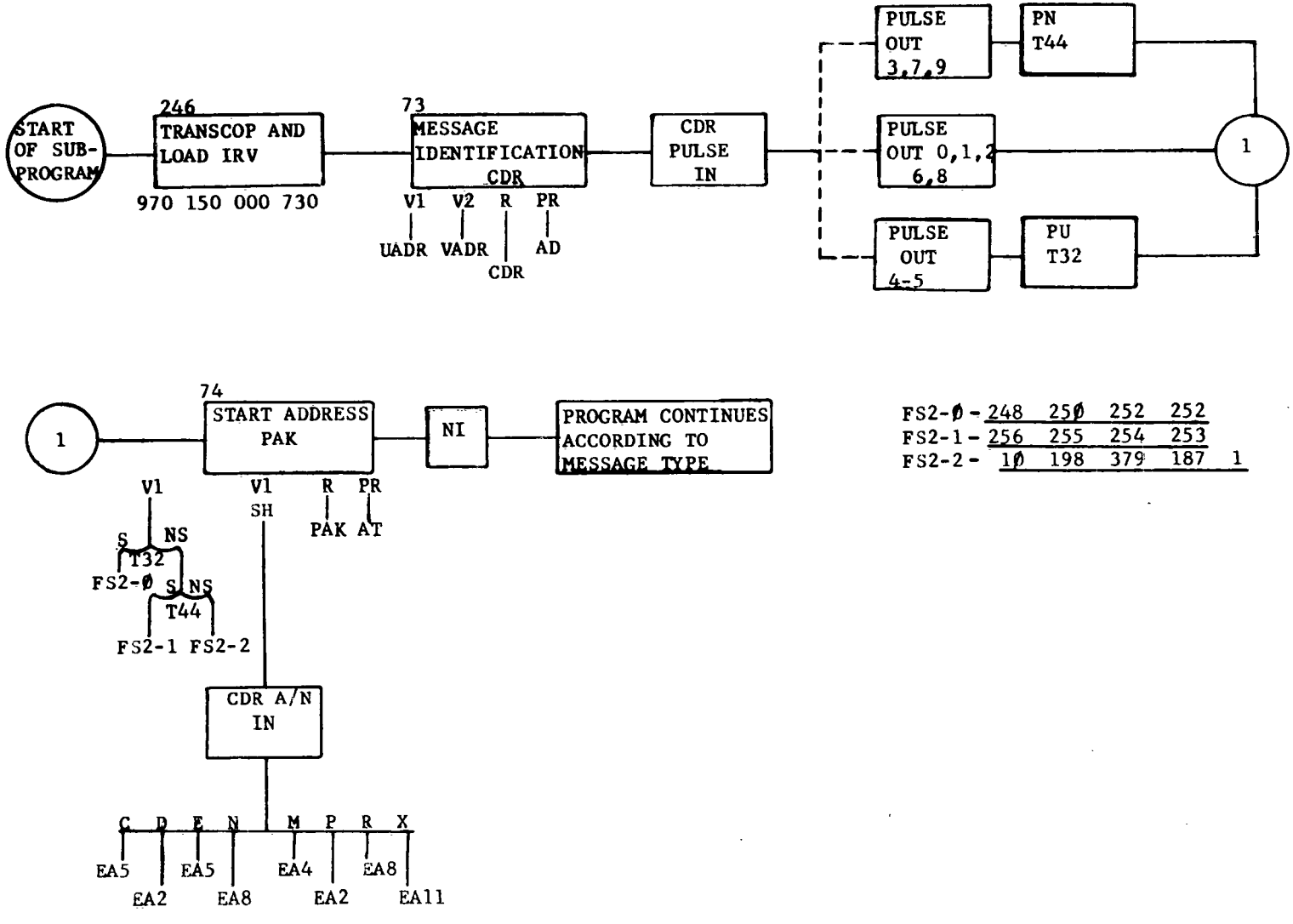

FIG. 41 DETERMINE MESSAGE KIND

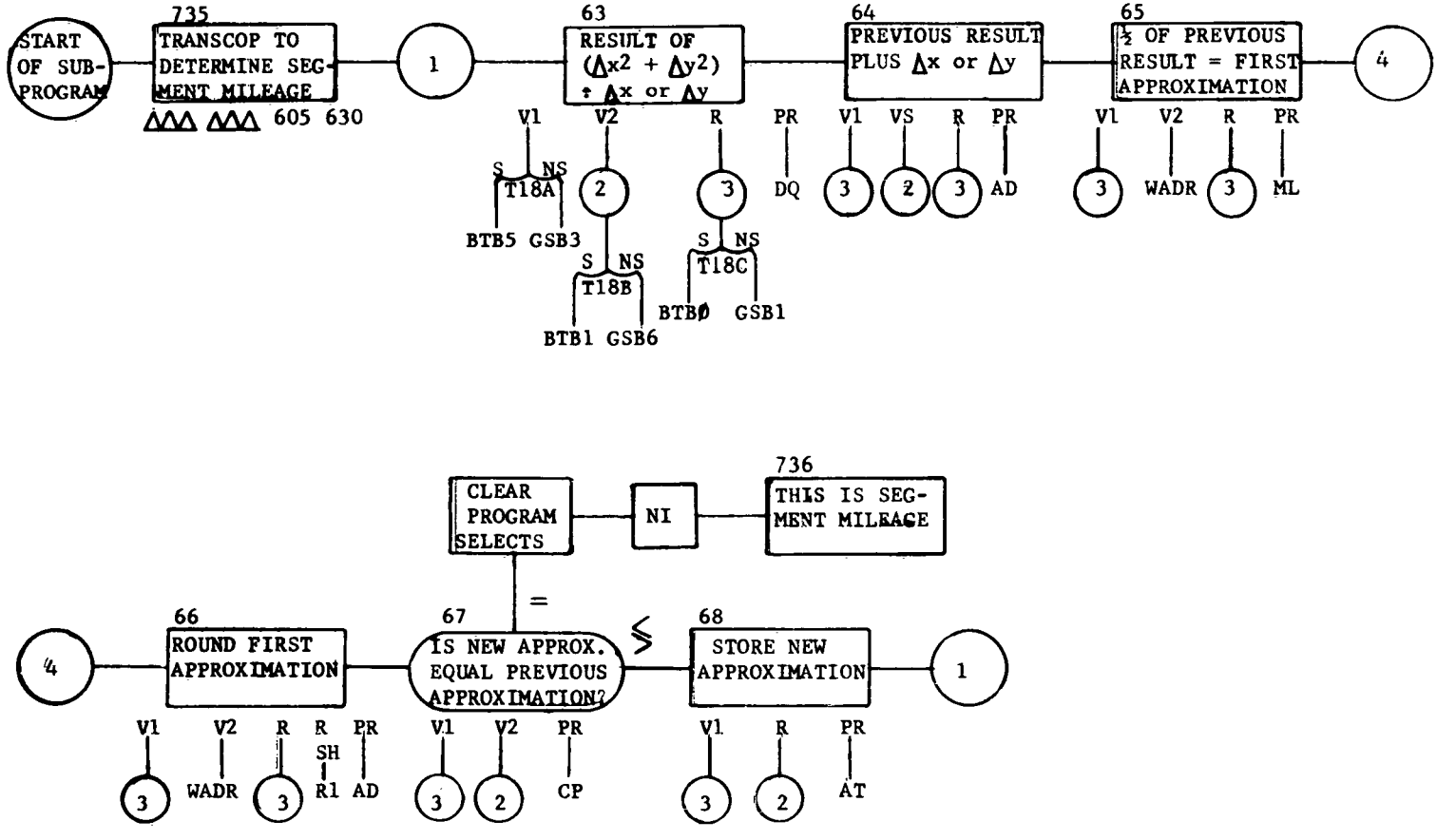

FIG. 42 SQUARE-ROOT ROUTINE

between the entry fix Y coordinate and the junction fix Y coordinate, squared) by delta Y or delta X, whichever is larger in magnitude. Step 64 adds delta X or delta Y (whichever is larger in magnitude) to the result of the operation performed by step 63. The program continues at step 65 which takes one half of the result of step 64 and stores it as the approximate distance between the entry fix and the junction fix. Step 66 merely rounds the approximate distance (results of step 64) to the nearest whole number. Program step 67 compares this result to the previously stored approximate distance, and an equal condition indicates that this is the mileage between the entry fix and the junction fix. The program continues at the next internal instruction word (736). If the result of the compare is unequal, step 68 stores the new approximate distance in the previously stored approximate distance location and continues the program at step 63.

As illustrated in Fig. 42, this routine utilizes selectors. The selectors are picked up prior to entering the routine to determine the mileage between the entry fix and the junction fix so that the data being processed at this time are on the select side of the selector. When the mileage has been determined, the selectors are dropped out and the program continues internally.

The routine is entered once more during direct-route processing if it is determined that the route is direct to a point which is latitude-longitude, rho-theta, or distance and direction. The purpose of this entry is to determine the mileage between the junction fix and a fix which is up to 25 miles from the junction fix, depending upon the slope of the route (angle of direction). At this particular time of processing, the data to be processed are specified by the addresses wired to the nonselect side of the selector. Mileage is determined to express the distance and direction from a fix nearer the junction point than that specified by the route of flight. For example, the route might specify 99 miles northeast of the Philadelphia VOR. This routine sets the linkage for the internal program to manufacture a fix posting which is located in the sector 99 miles northeast of the Philadelphia VOR.

Determine Flight Direction for Direct Route (Fig. 43): Instruction word 725 transfers the program to external control at plugboard step 62 and loads the instruction revolver. Step 62 loads the code distributor register with the direction code specified by

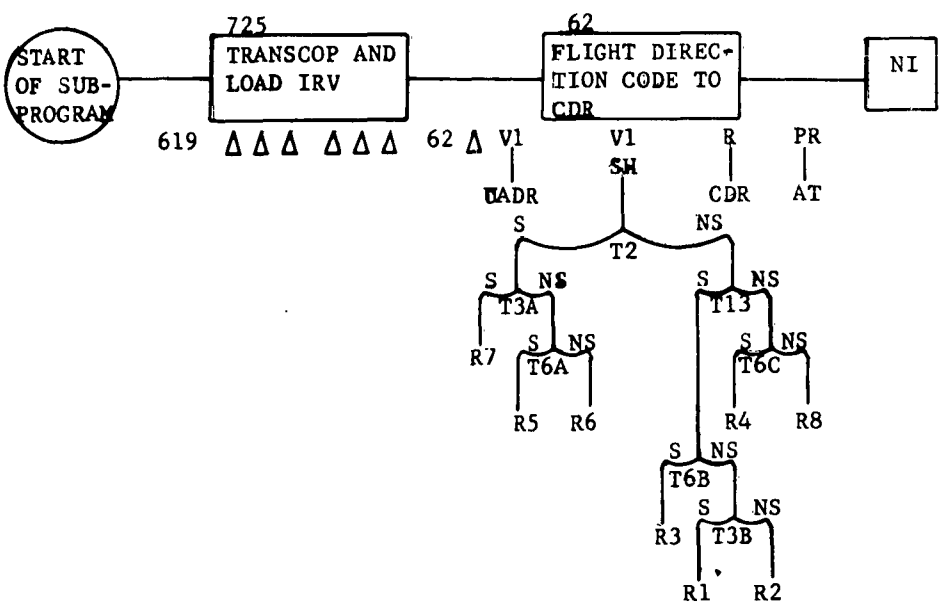

619 = Δ Δ Ø 1 2 3 4 5 6 7 Δ Δ

FIG. 43 DETERMINE FLIGHT DIRECTION FOR DIRECT ROUTE

the position of the selector chain wired to the V_1 shift of the step 62. These direction codes specify the direction of one of the eight cardinal points of the compass: north, northeast, east, and so forth. The out of step 62 is wired to the next instruction hub, and the program continues at the next internal instruction of the direct-route program.

Shift Aircraft Identification (Fig. 44): Instruction word 559 transfers control to the plugboard at program step 72 and specifies the address to continue the internal program when the shift operation is complete. Step 72 is accomplished four times during this routine. Step 72 transfers register A to register A, which contains the aircraft identification prior to entering step 72, with the appropriate shifts wired through the indicated selectors. The first time through, all selectors are in the nonselect position. The out of step 72 is wired to the common of selector 12D. The nonselect side of selector 12D picks up selectors 12 and 24 and returns to step 72 for the second time. The out of step 72 is wired to the common of selector 12D, and this time it is in the select position which is wired to the common of selector 30B. Selector 30B is in the nonselect position which picks up selectors 30 and 31 and returns to step 72 for the third time. The out of step 72 is wired to the common of selector 12D which, in the select position, is wired to the common of selector 30B. Selector 30B, which is now in the select position, is wired to the common of selector 43. Selector 43, in the nonselect position, picks up selectors 42 and 43 and returns to step 72. Step 72 now stores the shifted aircraft identification in the General Storage Buffer at field f, and the out of step 72 goes to the common of selector 12D which, in the select position, goes to the common of selector 30B. Selector 30B, being in the select position, goes to the common of selector 43 and selector 43, in the select position, goes to the in of step 52. Step 52 transfers the instruction revolver to the program address counter with a right shift 2. The program continues at the internal instruction word specified by W of the instruction revolver (537). This routine is entered only if the aircraft identification is less than seven characters in length.

Machine Error Recovery (Fig. 45): This routine accomplished recovery for basically four types of machine error: general storage program error, arithmetic error, parity error, and computer time-out errors.

The general storage program error hub is wired to the common of selector 46A. Alternate switch 3 in the select position picks up this selector. If alternate switch 3 is in the nonselect

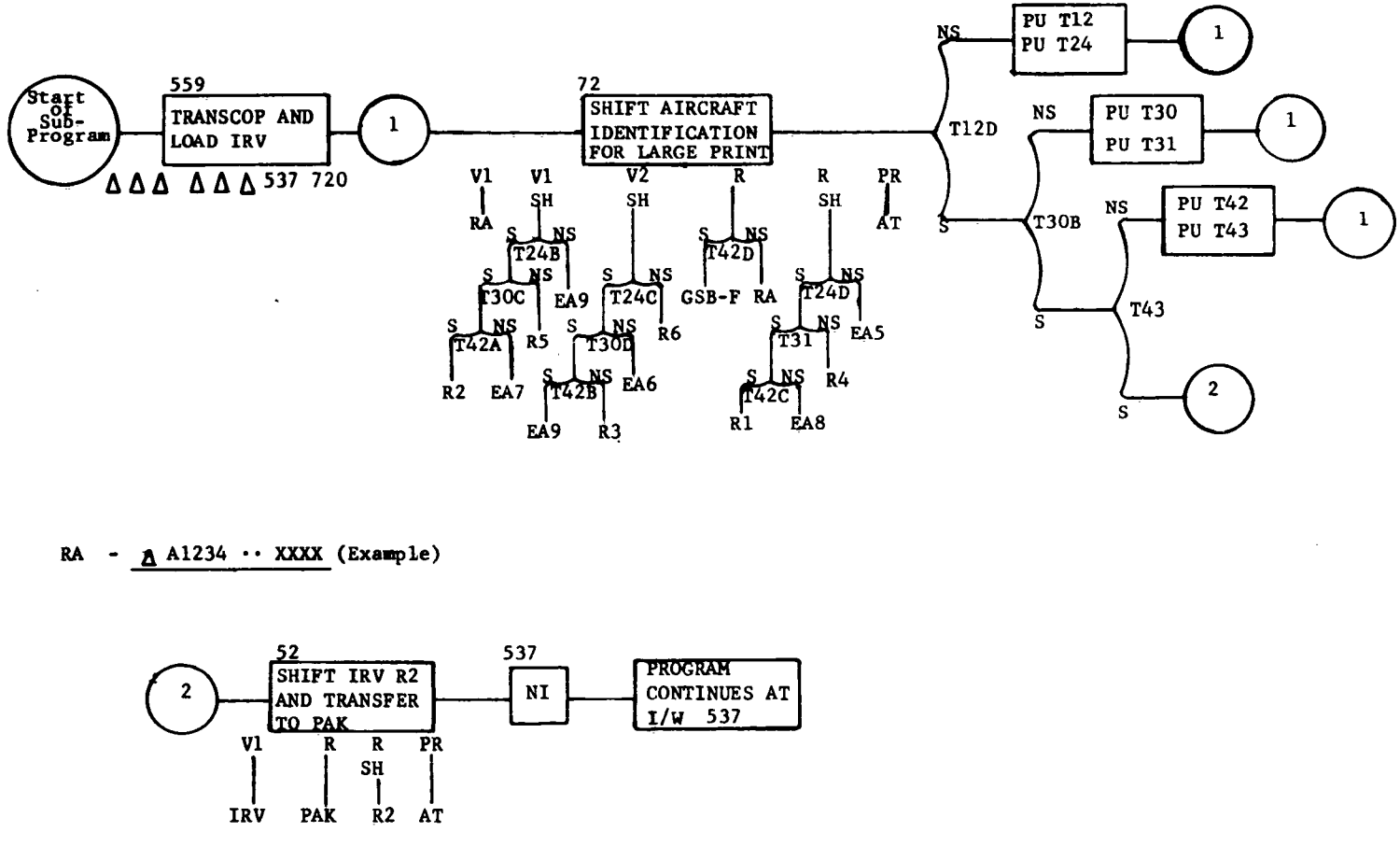

RA - Δ A1234 ·· XXXX (Example)

FIG. 44 SHIFT AIRCRAFT IDENTIFICATION

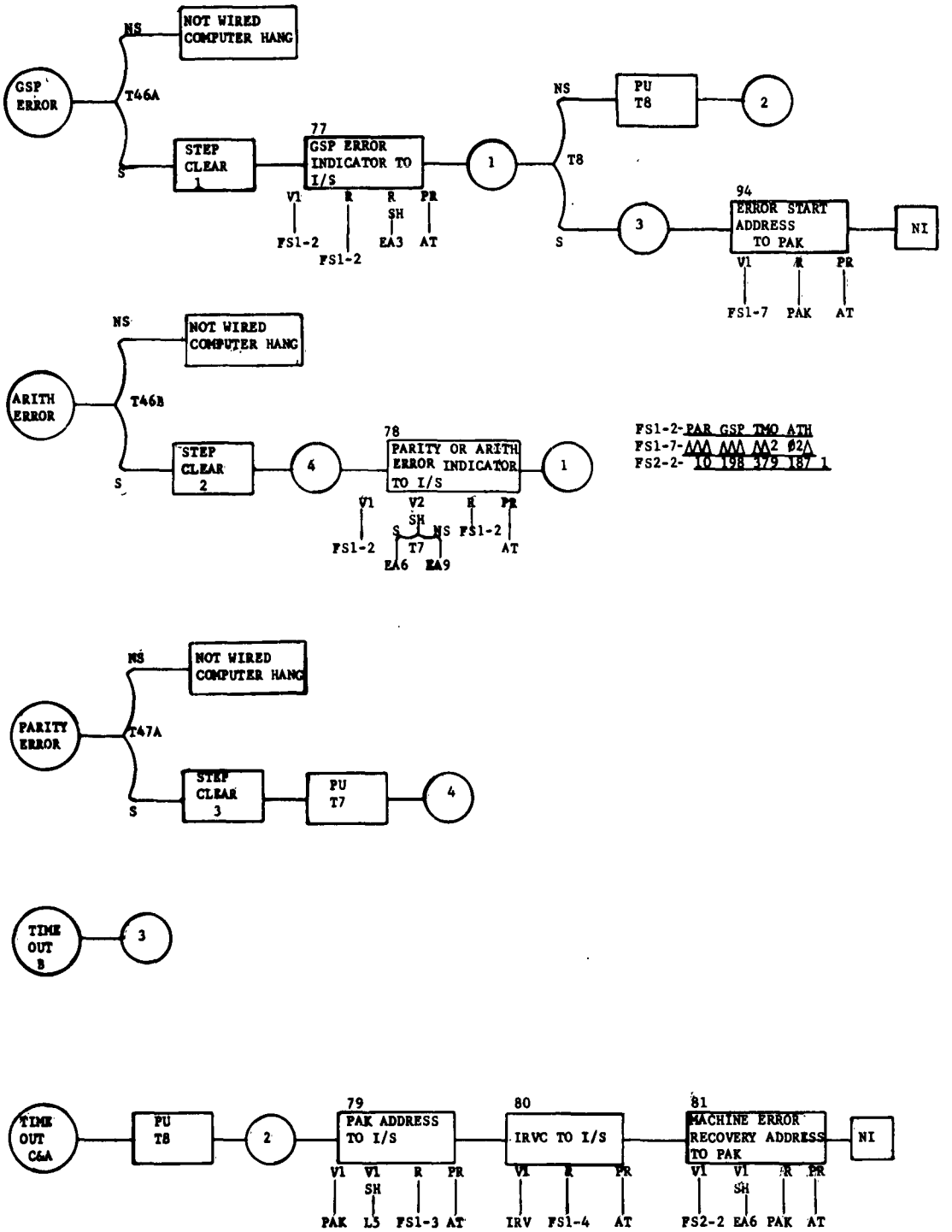

FIG. 45 MACHINE ERROR RECOVERY

position, the computer hangs up and no attempt is made to recover. The select side of 46A is wired to step clear 1, which is wired to the in of step 77. Step 77 transfers the general storage program error indicator to intermediate storage, and the out of step 77 is wired to the common of selector 8. If selector 8 is in the select position, the program continues at step 94, which transfers the second machine error start address of the executive program to the program address counter and transfers control of the program to internal control. This indicates that the general storage program error occurred during an attempted recovery of a previous computer machine error, and the program continues the recovery attempt without restoring new PAK, IRV, or GSAR addresses, and with a second error indication. If selector 8 is in the nonselect position, selector 8 is picked up and the program continues at step 79. Step 79 transfers the program counter address to intermediate storage, and the program continues at step 80 which transfers the instruction revolver to intermediate storage. Step 81 transfers the start address of the machine error recovery internal program to the program address counter, and the program continues at that internal instruction. The arithmetic error is wired to the common of selector 46B. This selector is also picked up by the select side of alternate switch 3. If selector 46B is in the nonselect position, the computer hangs and the program does not attempt to recover. The select side of 46B is wired to step clear 2, which is wired to the in of step 78. This step stores the arithmetic error indicator in intermediate storage, and the out of the step is wired to the common of selector 8. The select side of 8 indicates that the error has occurred while attempting a previous machine error recovery. Recovery is attempted again without restoring new PAK, IRV, or GSAR address and with a second error indication. Step 94 transfers the second machine error address of the executive program to the program address counter and returns the program to internal control. The nonselect of selector 8 picks up selector 8 and the program continues at step 79. Steps 79 and 80 transfer the program counter address and the instruction revolver to intermediate storage, and step 81 returns control of the program to the internal machine error recovery routine.

The parity error is wired to the common of selector 47A, and again, if alternate switch 3 is nonselect, the computer hangs and no attempt is made to recover. The select side of 47A is wired to step clear 3 which picks up selector 7 and goes in to step 78. Step 78 transfers the arithmetic error indicator to intermediate storage, and the program continues at the common of selector 8. The

program attempts to recover from the error as an original error or as a second error, depending on the position of selector 8.

Time-out error B indicates that the computer has timed out during an attempt to recover from a previous computer machine error. Step 94 returns control of the program to the second machine error start address in the Executive Routine.

Time-out errors C and A indicate that the computer has either timed out during a write unit record or, for the first time, Selector 8 is picked up, and the program continues at Step 79. The program then attempts to recover from this error.

All selectors left up are dropped out by the internal Machine Error Routine after recovery is completed.

Determine Message Kind for CUE (Fig. 46): This routine translates the message kind coming from the CUE pack, which is indicated with a numeric value, to an alpha character for the output message to the CUE register. Internal instruction 559 transfers the message kind (indicated by a numeric character) to the code distributor register and continues at internal instruction 560, which transfers control of the program to the plugboard at step 97 and loads the instruction revolver. Step 97 accesses the location specified by U of the instruction revolver and shifts it according to the character in the code distributor register which was loaded at instruction word 559. The appropriate alpha character in location 870 is placed in the code distributor register before returning control of the program to the next internal instruction.

High-Speed Printer Plugboard (Appendix XIX)

The wiring of the High-Speed Printer plugboard was developed solely for use on-line with the UFC-1 running the Master Operational Program. The program uses the printer to accomplish two operations. The primary operation is the printout of five lines of data on a standard strip form in proper format for use by the controller. The secondary use is to print one line of data (the word "void" repeated) across the last line printed of the last strip in the printer when an error indication is present.

The data to be printed are generated by the Master Operational Program and sent to the printer via an Input/Output track. Printer control is also determined by the program and

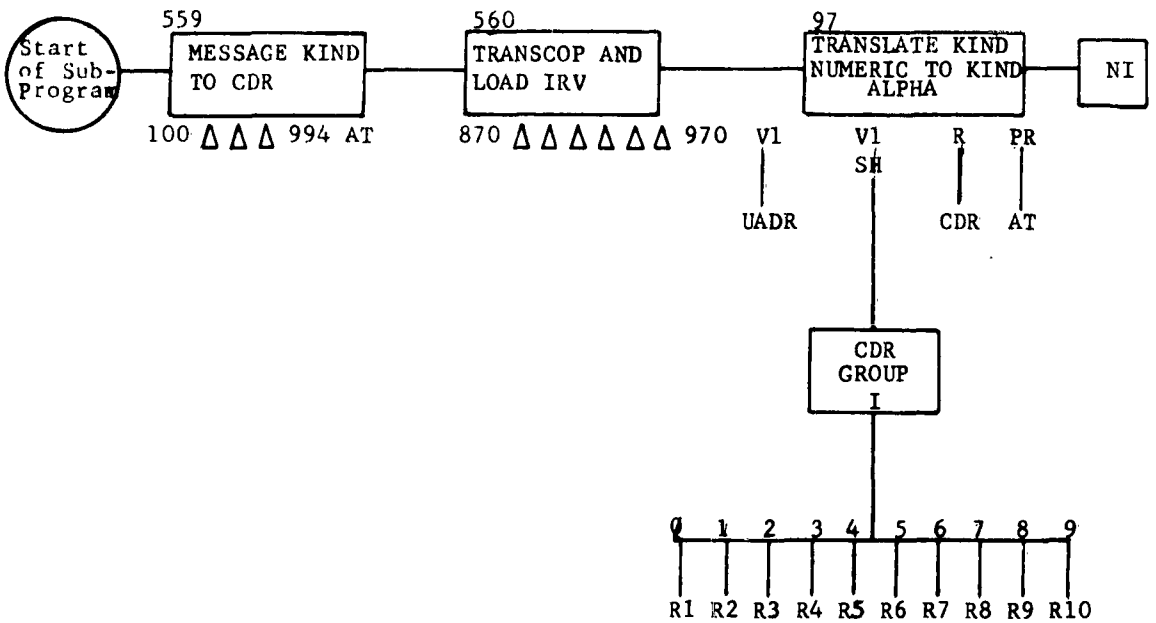

870 = X ç D E H P C ; R Ø ' Δ

FIG. 46 DETERMINE MESSAGE KIND FOR CUE

accomplished via the computer to Input/Output control lines, with the exceptions of the precedence and color codes, which are included within the data to be printed, and the track switch and inhibit paper feed, for the second half of the strip data, which are plugboard-controlled.

The formatting required within the computer, for printing a strip, consists of placing the data required for the first two and one half lines of print on one side of the High-Speed Printer output track, with the necessary color and precedence codes, and placing the data for the remaining two and one half lines of print, with its precedence codes, on the other side of the track. The color code is not needed on the second side as the color established by the first half remains in effect until another color code is received. The placement of each character of data, received from the computer, into its proper line and character print column on the strip is accomplished by the plugboard.

When a track of data is sent to the printer from the output tracks, it enters a printer buffer with positions numbered 1 through 120. Character-sign, word 9, of the output track enters first (this is for an on-line operation only) and is placed in buffer position 120. Character-1, word-9 is placed in buffer position 119, and so forth, until character-11, word-Ø is placed in buffer position 1. As each character is placed in the buffer, it is checked for a color code or a precedence code. The last color code encountered on the read into the buffer will determine the color of print for this blockette of data and any blockettes following until another color code is encountered.

When a precedence code is encountered, all characters following it will assume the precedence specified until another precedence code is encountered. The word "following" means entering the buffer following the precedence code, and therefore physically located on the track to the left (in a higher order position) of the precedence code. This is noted here especially, as the precedence code's location is opposite to that required for other Input/Output devices and also opposite to that required for the High-Speed Printer operated off-line with data from magnetic tape. The print command to the printer is accompanied by a form compensation signal which causes the paper (strips) to move upward in the printer until the first line on the strip is reached. Printing starts on this line. Therefore, no matter

what line on the preceding strip is resting under the print heads at the start of a strip print cycle, the first line of print for the new strip will occur on the top line of the new strip. This is accomplished through the use of a paper control loop which moves line for line in coincidence with the paper in the printer. Holes are punched in the loop every sixth line, corresponding to the line of print which would be on the line separating the two strips. When the form compensation signal is received, the paper loop and the strips move upward until the hole in the loop is detected. Movement stops at this point. The printer control section of the plugboard is wired so that all line spacing is controlled by the plugboard. The line-spacing portion is wired to cause one space between each line. When the print command is given to the printer, the printer will line-space once and start print on the top print line of the strip.

The data required to print a strip are formatted on two tracks and loaded onto both sides of the High-Speed Printer's output track. Because of the FAA modifications allowing a plugboard-defined track switch, only one print command is necessary to print the full strip. The data on the side of the track available to the printer are loaded into the buffer. Through the wiring of the multiline counter and multiline selectors on the plugboard (see bibliography, High-Speed Printer Programming, U-1659.3), the proper data for each line are selected from the buffer and are printed on the first three lines of the strip. Actually, the route portion of the third line is not available, and therefore, only half of the third line is printed.

The multiline counter is not wired directly from line 3 to line 4 but instead, is wired into the inhibit paper feed hub of the track switch portion of the plugboard, and from there to line four of the multiline counter. This wiring causes the output track to be switched, and the second part of the strip data is brought into the buffer. Printing resumes through lines 4, 5, and 6 of the multiline counter to select the proper data for each line of print. However, the inhibit paper feed hub on the plugboard was pulsed before printing restarted; therefore, printing actually resumed from the remaining portion (route portion) of the third line on the strip and proceeded through the fourth and fifth lines on the strip. Printing then terminates and the printer assumes a condition ready for the next strip.

Through the use of the zero suppress portion of the plugboard, it is possible to eliminate any zeros located to the left of a field of data within the buffer. The field limits are wired with the first (highest order) limit wired to a start zero suppress hub, and the last (lowest order) limit is wired to an end zero suppress hub. All characters are checked within these limits, and any zeros detected before (to the left of) a nonzero character are replaced with ignores (a nonprint, nonfunction character).

Both the altitude and the speed normally contain zeros in their high-order character positions which are not to be printed on the strip. The zero suppress feature is used to eliminate these zeros. The altitude, printed on line 1 in the first buffer of information, and the speed, printed on line 4 of the strip in the second buffer of information, are placed in corresponding buffer positions of the two tracks of data. These buffer positions are wired to form a zero suppress field.

No input/output to computer high speed control lines are utilized by the High-Speed Printer plugboard. The only input/output to computer control line used by the High-Speed Printer is control line Z, which is set by the printer when an error exists in the printer or the printer is out of paper or red ribbon. This control line signal is detected when the next strip is ready to be sent to the printer. If the set control line is to indicate printer error, the possibility exists that the strip previously printed may have incomplete or incorrect data and should be destroyed. This is accomplished via the computer. The computer sends a track containing the word "void" repeated and a red color code to the printer. The print signal is accompanied by an inhibit paper feed signal and a signal to pick up the multiline counter selector. The inhibit paper feed signal causes the print to start on the last line of the strip previously printed, which is still under the print heads, thus printing the word "void" repeatedly in red across the strip. As the multiline counter selector was picked up, it is now in the select position and causes an interruption in the normal multiline counter sequence so that the cycle bypasses multiline counters 2, 3, 4, 5, and 6 and terminates printing after one line of print. The printer now attains a ready condition for another strip. The computer program will then resend the strip just voided before continuing with its interrupted processing of the next strip.

The function codes contained in the data to the printer are also wired to print columns. However, these are all nonprint characters and will not normally print. If it is desired, during the debugging phase, a computer digit print operation may be performed (see bibliography, High-Speed Printer, Operating U-1659.2) to receive a coded print out of these characters.

Tables of Data

The tables of data for the Phase I system may be divided into two categories: computer-developed and constant. The computer-developed tables represent a major portion of the data assigned to general storage and are the building blocks from which the output product of the system is obtained. Tables of constant data contain the geographical picture of the center area for which they are compiled, as well as special codes for operational requirements.

The figures referred to in the narrative depict the positioning of data from the tables as they would appear in the General Storage Buffer, the number under each 12-character section being the word number. It will be noted that Tables 10 and 11 are not described. Table 11 has been deleted and Table 10 will be discussed with Table 6.

Computer Developed Tables

There are seven computer-developed tables in the Phase I program. Four of these tables will be constructed for each flight plan that is active in the center's area. The remaining three are special-condition tables and will be developed only when these conditions exist.

The amount of storage area assigned to the tables is based either on the volume of traffic for a given center area or program definition. In the subsections that follow, the latter condition will be described where necessary. In the erase logic, all data pertaining to a flight are erased from the tables 30 minutes after the aircraft is estimated to have passed the exit fix or arrived at destination.

Flight Identification Table (T1): The Flight Identification Table (Fig. 47) consists of seven characters of aircraft identification and four characters of departure fix. The three low-order characters of the T1 address become the computer flight number

TABLE 1

FLIGHT IDENTIFICATION TABLE

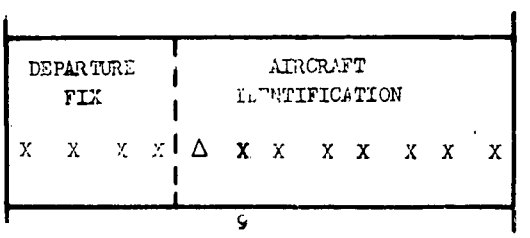

FIG. 47 TABLE 1 - FLIGHT IDENTIFICATION TABLE

for processing data pertaining to each flight. Because of program logic, the area in general storage assigned to T1 is fixed at 500 records located in the first ten channels of drum section one. Heretofore, this number of records has sufficed, but should operational requirements demand more storage area, an overflow routine could be readily developed.

Modification of the T1 address to obtain the computer flight number is accomplished by subtracting the constant 1010000. Conversely, the addition of the constant to the computer flight number restores the T1 address. A modification of the T1 address also provides the address of the Flight Data Table (T2) for the flight in question and will be described in the following paragraphs:

Flight Data Table (T2): The Flight Data Table (Fig. 48) contains all data pertinent to a flight plan with the exception of the aircraft identification. In addition to the route of flight, T2 contains the speed, type of aircraft, altitude, and the Remarks Table Address if required. It also carries the starting Fix Data Table (T7) address or the address of the Continuation Table (T14) if the route of flight exceeds seven segments. In the initial construction of T2, all data are available with the exception of the T7 or T14 address. At the completion of the first route segment processing, the starting T7 address is placed in T2, and if a continuation message is received for this flight, the T14 address replaces the T7 address which is then stored in the Continuation Table (T14).

As for T1, and because the address for T2 is a modification of T1, the Flight Data Table (T2) is limited to 500 records, utilizing the total storage area of drum section zero. By subtracting 1010000 from the T1 address and shifting the result left one, the T2 address is available. Likewise, the computer flight number added to spaces and the result shifted left one will provide the T2 address. Due to the logic of obtaining the T2 address from the T1 address, the erasing of T1 eliminates the T2 for that flight from an active status, and it will remain in storage until its associated T1 address causes a new T2 to overwrite the invalid data.

In the illustration of T2 (Fig. 48), it will be noted that an airway flight is depicted. When a direct route is displayed, the 10 characters described as FIX and AIRWAY, will appear as follows:

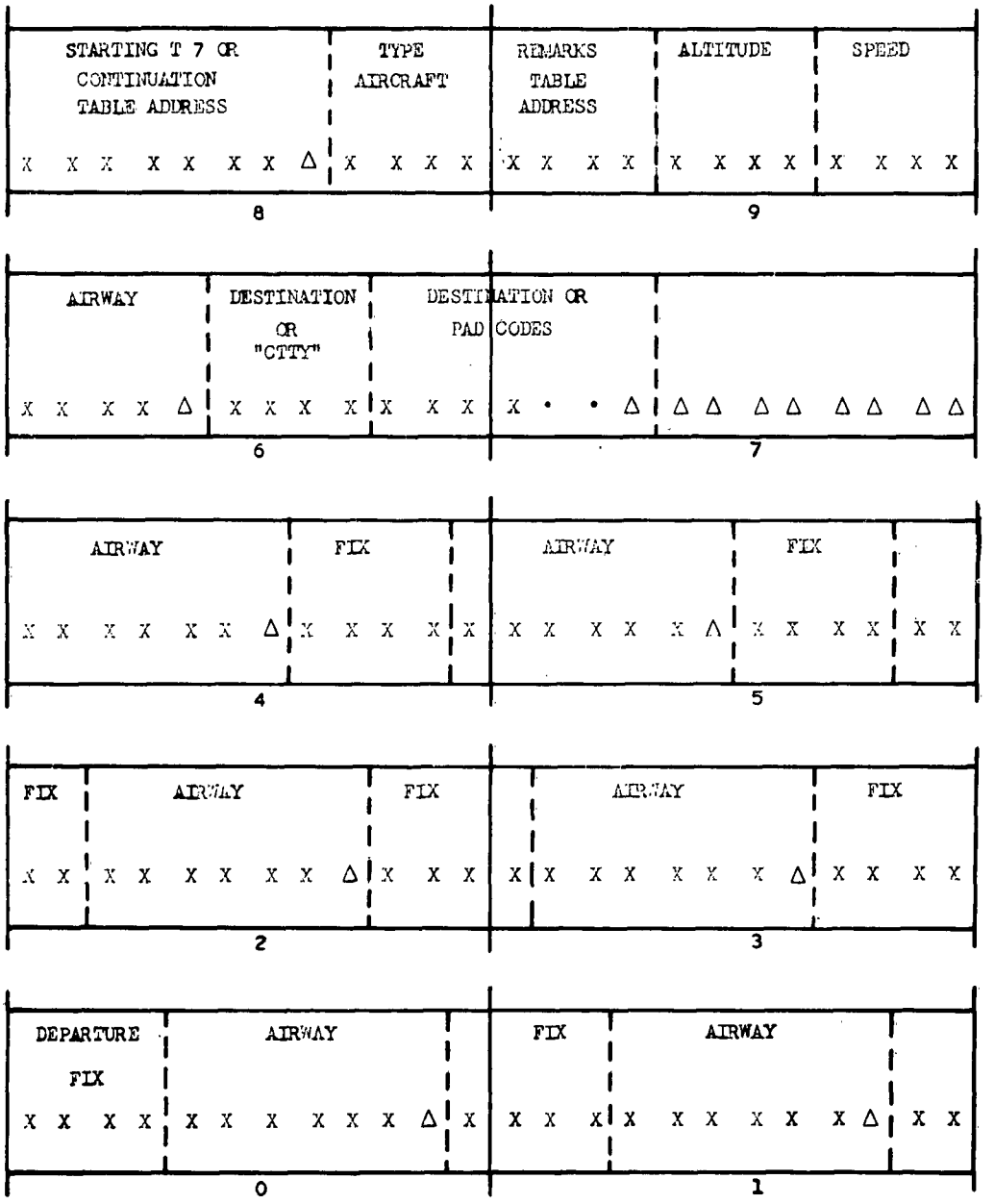
STARTING T 7 OR CONTINUATION TABLE ADDRESS
TYPE AIRCRAFT
REMARKS TABLE ADDRESS
ALTITUDE
SPEED
X X X X X X X Δ X X X X X X X X X X X X X X X X
8
9
AIRWAY
DESTINATION OR "CTTY"
DESTINATION OR PAD CODES
X X X X Δ X X X X X X X • • Δ Δ Δ Δ Δ Δ Δ Δ Δ Δ
6
7
AIRWAY
FIX
AIRWAY
FIX
X X X X X X Δ X X X X X X X X X X X X X X X X X X
4
5
FIX
AIRWAY
FIX
AIRWAY
FIX
X X X X X X X X Δ X X X X X X X X X X X X X X X X
2
3
DEPARTURE FIX
AIRWAY
FIX
AIRWAY
X X X X X X X X X X X X X X X X X X

	FIX AIRWAY
Point to Point	ACY.D.....
Distance and Direction	10NWACY...
Theta-Rho	ACY.220040
Latitude/Longitude	3910-08220

Also, the position of destination in T2 is variable, being dependent on the number of route segments in the flight plan.

Fix Data Table (T7): The Fix Data Table (Fig. 49) contains the fix information required for the printing of a flight progress strip for a fix along the route of a given flight plan. One T7 is developed for each fix in the route of flight that must be posted in accordance with operational requirements. In the building of a T7, the fix identifier, distance factor, and sector code are obtained from the constant data in the Airway Fix Table (T4). Also, special handling codes such as station direction code, color code, and coordination fix code come from this table. The balance of the information is computer-developed. The duplicate strip counter may be developed, or a constant in T4, but since its usage would depend on operational requirements, it has not been included in this program. Identification of the T7, as pertaining to a specific flight, is accomplished by the storage of the computer flight number.

The last T7 for a flight departing the center area contains data for the intercenter message (ICM) processing. This consists of the station direction code and the Coordination Fix T7 address (stored in the next fix T7 address location). The Coordination Fix T7 also contains special information in the form of a Coordination Fix Code and an ICM segment counter.

The storage area assigned to T7's is the largest single item of storage used by the system. An estimated six drum sections are required, the number of records assigned to each fix being determined from traffic studies. An overflow T7 storage area is assigned to handle abnormal traffic conditions and permit continued operation of the program.

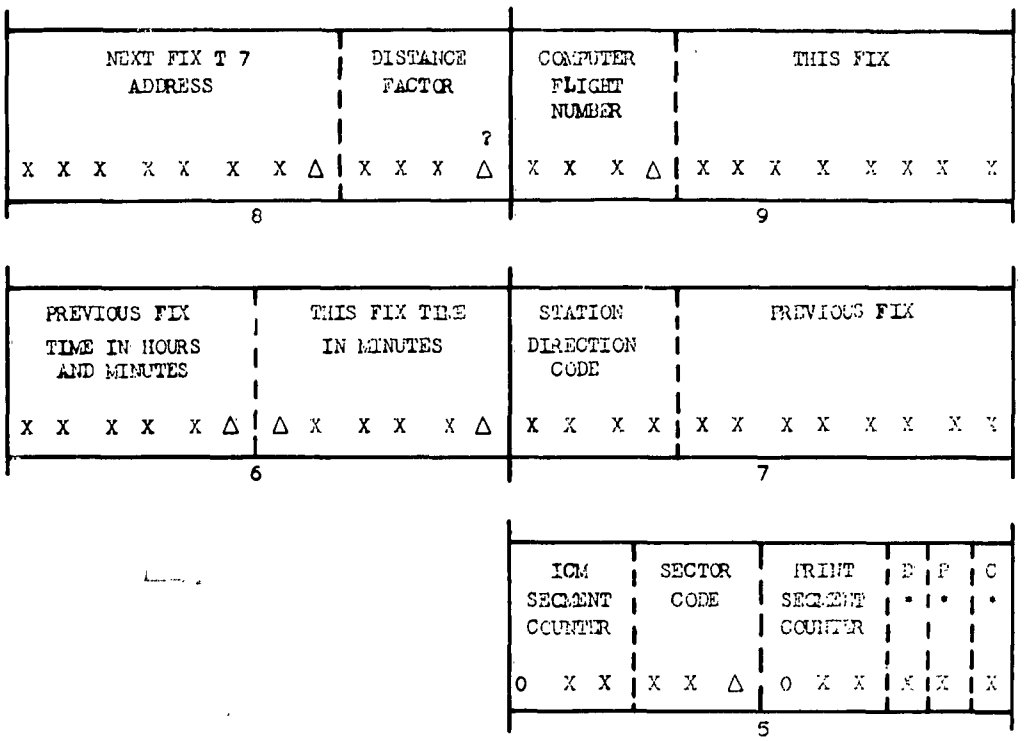

5-WORD RECORD LENGTH

- D DUPLICATE PRINT COUNTER
- P "PRINTED" CODE
- C "COORDINATION FIX" CODE

FIG. 49 TABLE 7 - FIX-DATA TABLE

Clock Readout Table (T9): The Clock Readout Table (Fig. 50) contains key information pertaining to chronological processing of flight plan data retained in general storage for this purpose. This table provides an action time for printing flight progress strips, the transmission of intercenter messages, and the erasure of data which are no longer current.

Since the processing logic of the program was developed to work with the time converted to minutes, the action time in T9 is also in minutes in increments of ten. A combination of computer flight number and T7 address indicates that the record is stored for strip printing or intercenter message transmission. Pad codes replace the T7 address if this record is stored to activate erasure. If a T7 address is stored, only the five low-order characters are used, and by the addition of a factor, a complete address is made available.

Continuation Table (T14): The Continuation Table (Fig. 51) is developed to permit the processing of a flight plan of more than the seven segments of route allowable in the T2 storage. Use of this table permits a maximum of 15 segments of route to be processed for one flight.

A skeleton T14 is developed immediately after the processing of a flight plan which contains the CTTY code in the route portion. In word zero of the skeleton T14 is the last segment of route of the parent message if no termination of processing has been detected. Otherwise, spaces are inserted in word zero. Word eight contains the T7 address of the last fix of the parent message. The low-order four characters of word eight contain the departure fix if this is a proposed flight plan, and in the high order of word nine is the computer flight number. Upon receipt of the continuation message, the final T14 is constructed as pictured in Fig. 51. Destination is not a fixed location in the table, its position being dependent on the number of route segments.

Remarks Table (T15): The Remarks Table (Fig. 52) is constructed for a flight plan which contains one or more characters of remarks up to a maximum of 36 characters. The Remarks Table address, which is stored in T2, is the low-order four characters of the address and is modified by a constant when data are required from the Remarks Table.

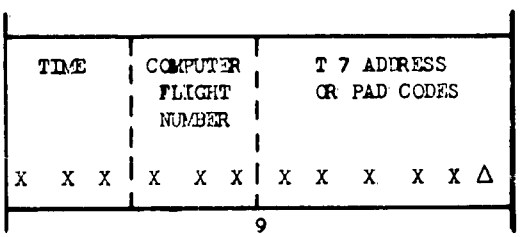

1-WORD RECORD LENGTH

FIG. 50 TABLE 9 - CLOCK READOUT TABLE

TABLE 14

CONTINUATION TABLE

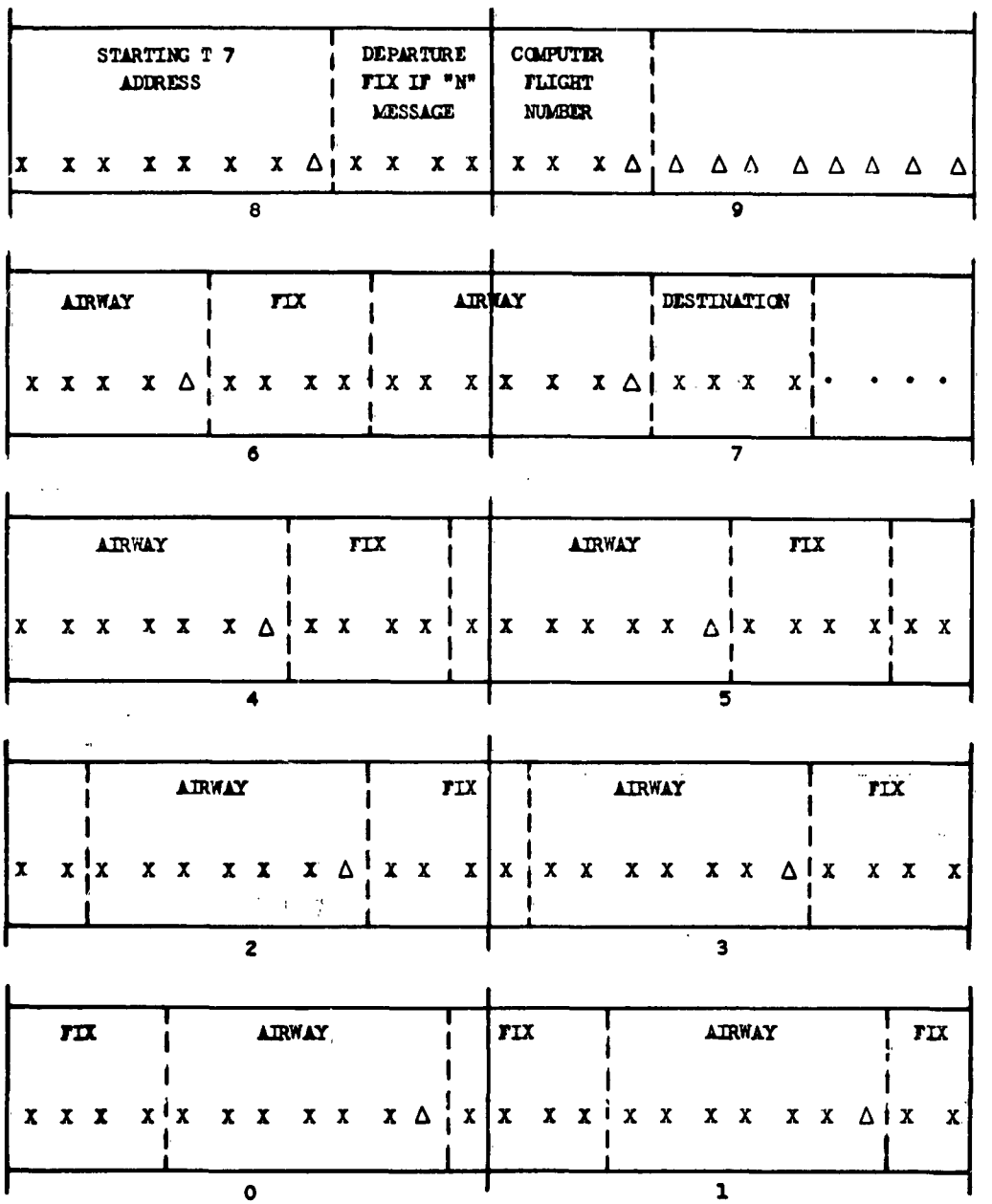

10-WORD RECORD LENGTH

FIG. 51 TABLE 14 - CONTINUATION TABLE

Continuation Message Index Table (T16): The Continuation Message Index Table (Fig. 53) is developed to give rapid access to the Continuation Table address. It is constructed when the processing of a flight plan indicates that there is more route to follow.

The address of the skeleton T14 is stored in T16, as well as the aircraft identification, the addressor, and a time for error printout. The aircraft identification relates this table to the continuation message when it is received. If the continuation message is not received in a specified time after the processing of the parent message, an error printout is triggered, and the addressor information permits a rapid determination of the source of the message. The Continuation Message Index Table is erased immediately after the T14 address is made available for processing the continuation message.

A total of 25 records is allowed for this table in general storage. Since a continuation message must follow immediately behind the parent message, the elapsed time between the building of T16 and its erasure is small. If a continuation message is not received, a notification printout is made, and a period of time allowed for operations personnel to find and enter the message.

Constant Tables

There are 14 tables of constants required by the program. Twelve of these tables provide the program with the geographical structure and limits of a given center area. The other two tables are the Time-Conversion Table and the Jet-Type Table.

Airway Table (T3): The Airway Table (Fig. 54) contains the starting address of the two tables required for the processing of fix postings for any airway lying within the boundaries of the center area. These addresses represent the area in general storage containing the Airway-Junction Table (T8) and the Airway-Fix Table (T4) assigned to the specified airway.

The number of records required for T3 is equal to the number of airways in the center area plus any coded routes made necessary by operational requirements.

Airway-Fix Table (T4): The Airway-Fix Table (Fig. 55) provides the information required for the construction of a Fix Data Table (T7) for a fix on a specific airway. Also, it contains

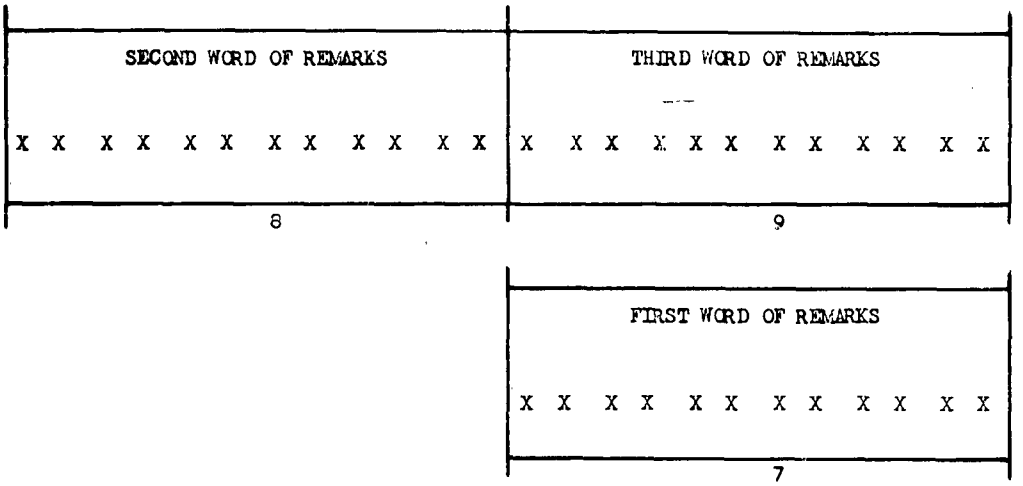

3-WORD RECORD LENGTH

FIG. 52 TABLE 15 - REMARKS TABLE

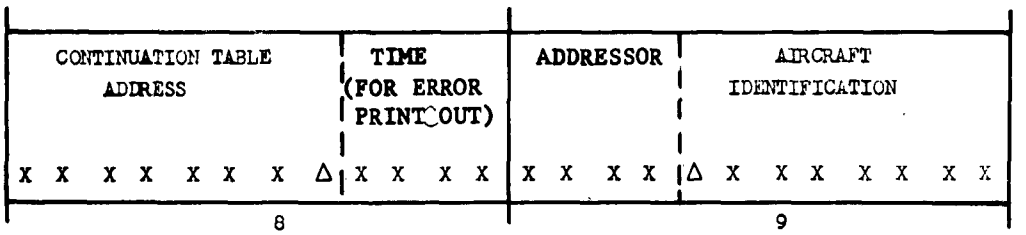

2-WORD RECORD LENGTH

FIG. 53 TABLE 16 - CONTINUATION MESSAGE INDEX TABLE

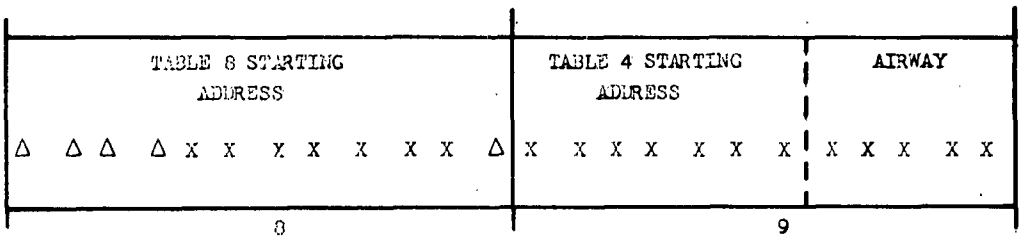

2-WORD RECORD LENGTH

FIG. 54 TABLE 3 - AIRWAY TABLE

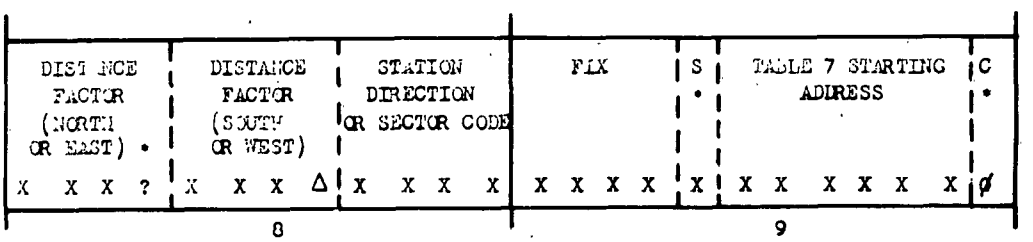

2-WORD RECORD LENGTH

- C COORDINATION FIX CODE IF APPLICABLE (6)
- S STATUS CODE (9, +, −, Δ)
- ? RED COLOR CODE

FIG. 55 TABLE 4 - AIRWAY FIX TABLE

status codes defining the functions of the fix in relation to the processing required for the airway. From these codes, a fix may be recognized as a no-print fix, coordination fix, or an outside fix (in adjacent center area).

The data needed in the construction of a T7 for a fix consist of a distance factor, color-of-print code, sector code, and the starting address of the general storage area provided for this fix's T7's. The distance factor is the number of nautical miles to the next fix multiplied by six. Each T4 record provides for two distance factors, the one used by the program being determined by the direction of flight. The color code accompanies the appropriate distance factor. The sector code appears in T4 records for inside fixes (inside the center area), while a station direction code occupies the same location when the fix is outside of the area. The station direction code identifies the center to which an intercenter message is to be sent.

Each airway in the center area has its own unique set of T4 records; one record for each fix on the airway and, if the airway exits the area, one record for each coordination fix in the adjacent center's area over which an incoming estimate is received. The fixes must be stored in successive order, since the program processing logic is based on a comparison of the entry and junction fix general storage addresses.

Major Outside Fix Table (T5): The Major Outside Fix Table (Fig. 56) contains the fix identifier, its associated X-Y grid values, and a sign (+ or -) denoting the direction of this fix from the center area. The X-Y grid values are developed from a single quadrant coordinate system whose zero lines are 300 miles from the center boundary.

Major Inside Fix Table (T6): The Major Inside Fix Table (Fig. 57) provides the information required for the construction of a Fix Data Table (T7) for a fix in a direct-route segment. It contains the starting T7 address for the fix, the X-Y grid values, the pertinent sector codes, and the fix identifier. Included in T6 are "dummy" fixes along the boundary of the center area to preclude the possibility of a flight departing the area and not triggering an intercenter message. In addition, station direction codes with appropriate X-Y grid values are included in T6 to identify the center area bounding the area for which the table is constructed.

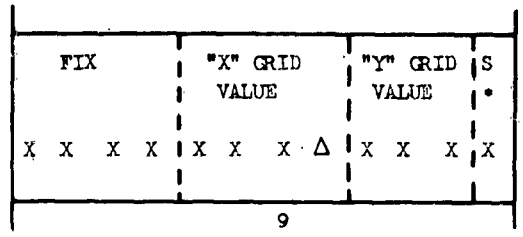

1-WORD RECORD LENGTH

• S SIGN (+, -) DENOTING DIRECTION

FIG. 56 TABLE 5 - MAJOR OUTSIDE FIX TABLE

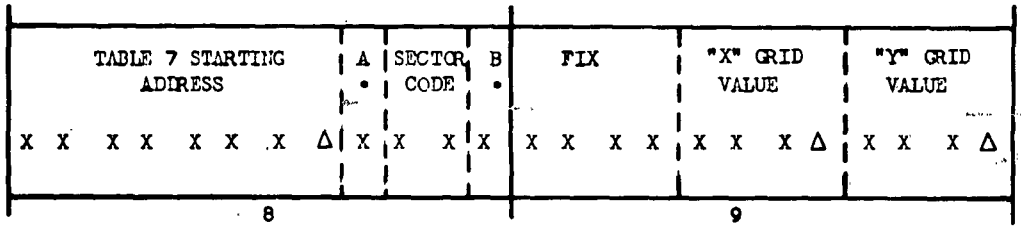

2-WORD RECORD LENGTH

• A APPROACH CONTROL CODE IF APPLICABLE
• B BAY CODE

FIG. 57 TABLE 6 - MAJOR INSIDE FIX TABLE

In building a Major Inside Fix Table, it may be necessary, due to the size of the center area, to provide a Minor Inside Fix Table (T10). The more commonly used fixes are assigned to T6 and the lesser fixes to T10. The search control location at the end of T6 leads to the start of T10 and the search control location at the end of T10 leads to the start of the Major Outside Fix Table (T5). Due to the fact that the Airway Routine uses T5 to identify outside fixes, this table is placed at the end of the chain of searches.

Airway-Junction Table (T8): The Airway Junction Table (Fig. 58) contains an airway and the Airway Fix Table (T4) address of the junction fix. Each airway in the center area has its own unique set of T8 records. Each of the records represents an airway that junctions with the airway concerned and provides the T4 address of the junction fix. If two airways junction at more than one point, these junctions are not included in T8. To permit the processing of flight plans in which the nonfiled junction is outside the center area, all major outside airways which junction with a specific inside airway are included in the T8. The T4 address accompanying these outside airways is that of the outside fix at the end of the specified airways T4 according to direction of flight.

Clock Table (T12): The Clock Table (Fig. 59) contains the time in tens of minutes, and for each of these 10-minute increments, a factor of the time plus 30 minutes. The time itself is in hours and tens of minutes, while the factor is minutes only, in tens of minutes. The Clock Table provides the program with a program-controlled, time-for-processing comparator.

Jet-Type Table (T13): The Jet-Type Table (Fig. 60) is simply a listing of aircraft used by the Direct-Route Routine in determining whether an on-top flight should be processed as a high- or low-altitude flight.

Fix-Conversion Table (T17): The Fix-Conversion Table (Fig. 61) consists of fixes which may be filed in a flight plan and not found in the Airway Fix Table (T4). These fixes may be minor airports adjacent to major fixes or low-frequency fixes in a segment of route followed by a victor airway segment.

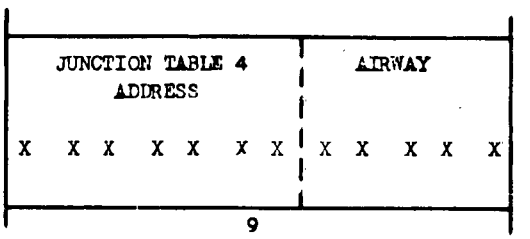

1-WORD RECORD LENGTH

FIG. 58 TABLE 8 - AIRWAY-JUNCTION TABLE

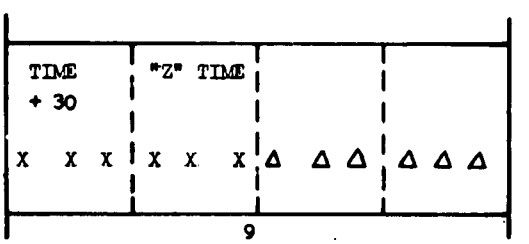

1-WORD RECORD LENGTH

FIG. 59 TABLE 12 - CLOCK TABLE

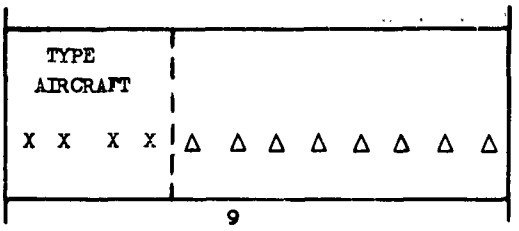

FIG. 60 TABLE 13 - JET-TYPE TABLE

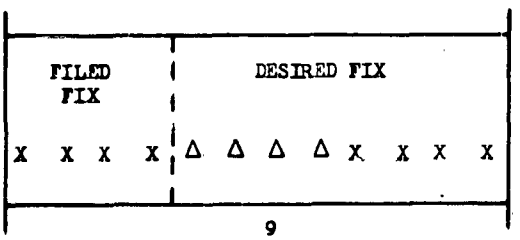

FIG. 61 TABLE 17 - FIX-CONVERSION TABLE

Theta-Rho Table (T18): The Theta-Rho Table (Fig. 62) contains the sine and cosine function of each degree of a circle and the relative cardinal compass heading corresponding to each degree.

Latitude Reference Table (T19): The Latitude Reference Table (Fig. 63) contains the distance from the equator to the X axis. This mileage is reflected every 10 minutes of a degree of longitude for the entire length of the X axis. The data in this table are used in the development of the Y grid value.

"X" Minimum/Maximum Table (T20): The X Minimum/Maximum Table (Fig. 64) provides the eastern and western limits of the center area. The Y grid value is listed in 10-mile increments along the Y axis from the northernmost point of the center area to the southernmost point, and each of these increments is accompanied by the east and west X grid value limits.

Longitude Reference Table (T21): The Longitude Reference Table (Fig. 65) contains the cosine of each 10 minutes of a degree of latitude along the entire length of the Y axis. In addition, the table provides the distance from the prime meridian to the Y axis for each listed latitude. This table is used in the development of the X grid value.

Flight Direction Table(T22): The Flight Direction Table (Fig. 66) contains the appropriate color code for a flight line between any two cardinal compass headings and is used by the Direct-Route Routine to determine which color is to be stored in T7 for a given fix posting.

Relative Direction Table (T23): The Relative Direction Table (Fig. 67) contains the sine and cosine function for each of the eight cardinal compass headings.

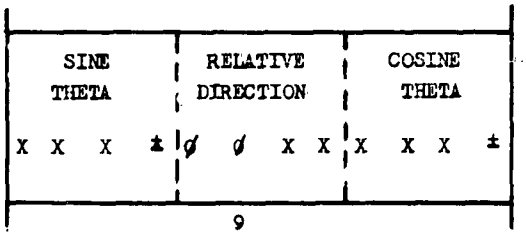

1-WORD RECORD LENGTH

FIG. 62 TABLE 18 - THETA-RHO TABLE

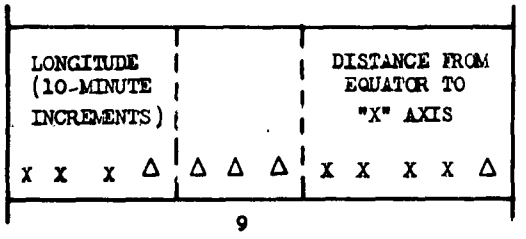

1-WORD RECORD LENGTH

FIG. 63 TABLE 19 - LATITUDE REFERENCE TABLE

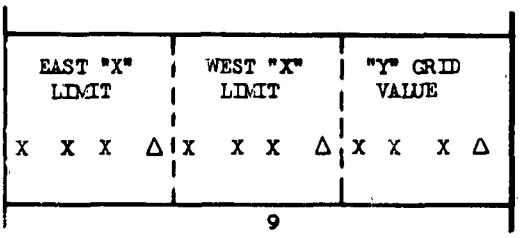

1-WORD RECORD LENGTH

FIG. 64 TABLE 20 - X MINIMUM/MAXIMUM TABLE

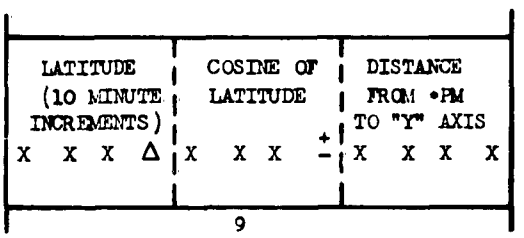

1-WORD RECORD LENGTH

• PRIME MERIDIAN

FIG. 65 TABLE 21 - LONGITUDE REFERENCE TABLE

FLIGHT DIRECTION TABLE

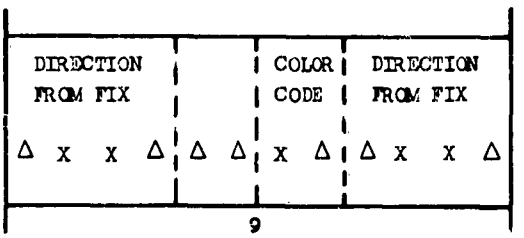

1-WORD RECORD LENGTH

FIG. 66 TABLE 22 - FLIGHT DIRECTION TABLE

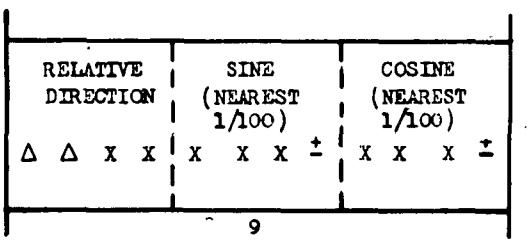

1-WORD RECORD LENGTH

FIG. 67 TABLE 23 - RELATIVE DIRECTION TABLE

CONCLUSIONS

It is concluded that:

1. This program meets the basic requirements of flight plan acceptance, rapid two-color flight progress strip printing, and automatic flight data transmission on teletype lines required in all Air Route Traffic Control Centers. The only requirement for immediate use of this program in a UFC-1 equipped center would be the preparation of the proper tables of data for the area concerned.

2. This program does not provide for operating requirements unique to an individual center. Provision is made in the program for some of the possible variations, but revisions and additions would be required to meet all of the operational requirements.

3. This document would be an adequate guide to establishment of the basic air traffic control computer programming concepts for any new computer system. It also would provide an adequate basic program around which a center to be equipped with a UFC-1 might develop a complete operational program.

4. It does not appear practical to suggest the use of this entire program in the present computer-equipped centers, as the programs in use in these centers meet not only the requirements of the Air Traffic Service but all of the unique requirements of the center concerned as well. They have also been refined considerably through several years of use. It may be desirable, however, to utilize some of the concepts and methods used in this program in the field programs.

5. The use of the digital clock to hold flight data in the computer until a more convenient time, as is done in this program, is not acceptable in a live environment and should be bypassed until an adequate, safe, data-retrieval method, in the event of computer failure, is developed.

6. This program would be useful as a basic test-bed program which may be easily modified to test new programming concepts or new equipment to be used with an automatic system. It also may be used to provide a simulated center environment for test of other center equipment or concepts.

RECOMMENDATIONS

It is recommended that:

1. This document be provided to all centers to be equipped with UFC-1 computers as both a basic air traffic control computer programming training guide and as a basic program around which a program meeting all the center's unique requirements may be developed.

2. This program be used as a guide to establish the basic air traffic control computer programming concepts necessary for any new computer system other than a UFC-1 installed in a center.

3. A safe data-retrieval system be investigated and developed in order to fully utilize the potential of the digital clock.

4. All demand stations be assigned common numbering, and all programs and tables put on magnetic tape use a common method with common labeling for all UFC-1 equipped centers. This would allow interchange of programs between the centers and NAFEC for the purpose of testing new equipments or programming concepts or establishing simulated environments with as little equipment or program revisions as possible.

5. Any new UFC-1 equipped centers, and wherever possible, the presently equipped centers, use common wiring on the Input, Output and High-Speed Printer plugboards. Where there are common processes on the main computer plugboard, these also should be wired to common plugboard steps. This would allow ease of program interchange without requiring new plugboards.

ACKNOWLEDGMENTS

The authors wish to acknowledge the valuable contributions of Mr. Harry Haugan, Technical Services Division, Measurement and Computation Branch, Computer Programming Section, and Mr. Earl L. McAfee, Evaluation Division, Data Processing and Display Branch, En Route Section, former task managers during the development of this document, and to Messrs. Ronald Moir and Gerald Fremsted of Remington Rand Univac, St. Paul, Minnesota, for their aid in the formulation of the Translate and Format plugboards.

BIBLIOGRAPHY

Circular Letter AT 200-12, Flight Plan Format for the Computer Program, May 25, 1960.

Circular Letter AT 200-66, Revisions to Circular Letter AT 200-12, September 25, 1959.

Circular Letter AT 200-3, Data Processing and Operational Procedures Associated with Phase I Computer Systems, June 2, 1960.

Remington Rand Univac Publications:

Univac File Computer Systems, U-1608 (EF309E)

High-Speed Paper Tape System, U-1788

Inquiry Typewriter, U-157ØA

High-Speed Printer, U-1659. 1,.2, .3

A. L. R. S. Computer Timer and Error Reset Circuitry, PX 1Ø81, September 20, 1958

On-Line I/O System for FAA, PX 11Ø7, September 1, 1959

High-Speed Paper Tape Input Message Board Documentation and Revisions, G. B. Fremsted, June 9, 1960

William G. Brown, Improved Phase I Direct Routine.

Robert B. Stein, Memorandum Report on Logic Tracker Program for the Phase I Univac File Computer.

APPENDIX I

GLOSSARY

APPENDIX I

GLOSSARY

Address	-	A label, name, or number identifying a memory location at which information can be stored, and/or from which information can be obtained.
Airway	-	A path through the navigable airspace identified by an area on the surface of the earth, designated as suitable for interstate, overseas, or foreign commerce.
Alternate Switch	-	A manually operated selector.
Bay	-	A unique portion of a sector set aside for flight progress strips prepared for flights over a particular small area of a sector. Usually this area encompasses one primary fix, but there are bays which include one or more secondary fixes located near the primary fix.
Bay Code	-	A code assigned to each bay and used by the Direct Routine to eliminate the possibility of producing strips for more than one fix in the same bay for a given flight segment through that bay's area.
Blockette	-	The entire contents of a 10-word, 120-character buffer or a track on the high-speed drum.
Block Transfer Buffer (BTB)	-	A 120-character magnetic core memory used in block transfer instructions to transmit a "block" of data (1 up to 120 characters) from one high-speed drum or buffer memory location to another.
Branch	-	A means of determining the next operation, depending on whether the result of a Program Step is +, -, or Ø. It also is used in

connection with the compare process to determine the next operation, depending on whether V1 is greater than, less than, or equal to, V2.

Breakpoints 1, 2, 3 - Signals produced on the plugboard to interrupt an internally defined program at a predetermined point when the proper breakpoint switch is set on the console.

Center Area - A geographical area of defined dimensions within which IFR aircraft are under the jurisdiction of a specific Air Route Traffic Control Center.

Code Distributor Register (CDR) - A one-character addressable register used to store any one of a group of 40 permissible characters for the purpose of variously routing pulses or D-C enables. Program variation is thus allowed via the computer plugboard depending upon the character within the CDR.

Color Code - A code obtained from Table 4 or from direct processing inserted in each Table 7, which specifies the color of print for the strip depending on the direction of flight. (Red for northbound or eastbound, black for southbound or westbound, generally.)

Computer Flight Number - The low-order three characters of the Table 1 address for a specific flight. Starting with this number, the addresses of all data stored for a flight may be obtained by the computer.

Conditional Storage - A special-purpose memory in the central computer used to store the results of arithmetic or comparison operations when instructed by the program. After being set, certain instructions may use the setting for program variance.

Control Boards - The boards on which a controller sequences the flight progress strips for flights through his sector.

Controller/Computer Updating Equipment (CUE)	-	A device to allow the controller direct access from his sector to perintent control data in the computer memory. It also furnishes the computer with a means of alerting controllers to changes that affect flights in their sectors.
Coordination Fix	-	The fix within a center's area which is the coordination point for the transfer of flight data for a specific flight to an adjacent center. The flight's estimated time over this fix is the time included in the intercenter message.
Coordination Fix Code	-	A flag inserted in a specific location in the Table 7 for a flight's coordination fix at the time the last Table 7 for the flight was constructed. This flag is used in the Printout Routine to recognize this flight's coordination fix Table 7 for the intercenter message.
CTTY	-	A code included in place of the junction portion of the 7th segment of route on a message whose route is too long for one message, and which is followed by an X kind of message containing the remainder of the route.
Delta X	-	A term referring to the difference in value of the junction fix X coordinate and the entry fix X coordinate in the X-Y grid.
Delta Y	-	A term referring to the difference in value of the junction fix Y coordinate and the entry fix Y coordinate in the X-Y grid.
Demand	-	An instruction which places a particular Input/Output Unit "on demand" and permits control information to be exchanged between the computer and that particular Input/Output Unit.
Demand Station	-	One of the ten Input/Output tracks and its associated control circuitry.

Departure Message - A D kind of message containing the time of departure for a previously entered proposed departure message. Any change in altitude, speed, or route may also be included with this message if desired.

Direct Route - A route segment described as direct from one point to another point rather than via an airway. A point of a direct segment may be a fix (e.g., ACY), a relative distance and direction point (e.g., 10NE ACY), a rho-theta point (e.g., ACY 18040), or a latitude-longitude point (e.g., 3910-08245).

Distance Factor - A three-character factor taken from Table 4, or constructed in direct-route processing and placed in Table 7. This factor is the distance from the last fix to this fix multiplied by 6 and is used in the Time Computation Routine to compute the estimated time required for this aircraft to traverse this distance. The formula used in the computation is $t = \frac{d \times 60}{r}$ where t is the time in minutes between the fixes, d is the distance in nautical miles between the fixes, and r is the aircraft speed in knots.

"Dummy" Demand - A demand instruction which does not send any control line signals from the computer to the I/O unit. This instruction is used to track switch the I/O tracks or to test the I/O unit for I/O to computer high-speed control lines.

End-of-File Code - A special code stored along with actual data, used to separate files. In general storage, prime zero ('Ø) is used; on magnetic tape, 12 Z's in at least one word are employed.

En Route Flight - An airborne flight.

En Route Flight Plan - An E kind of message for a flight which is en route when the message enters the computer.

Entry Fix - The fix by which a route segment is entered. The junction fix of the preceding segment is the entry fix for this segment.

Factor Storage - Memory locations on the high-speed drum set aside for storage of constants and factors used in the processing.

Field - A unit of data on the high-speed drum, in the general storage buffer, or the block transfer buffer which is a collection of from 1 to 119 contiguous characters as defined by the field pattern. These may be used as a source or destination for data.

Field Pattern - A collection of 120 bits used to define the fields in a buffer or on a high-speed drum track.

Find - A term used to indicate that the record containing the identifier searched for in general storage or magnetic tape was found in a search-equal operation, or that a record which does not contain the identifier was found in a search-unequal operation.

Fix - A predetermined geographical location providing an aid for navigation and/or a reference point for control purposes.

Fix Posting - A flight progress strip prepared for a fix over which a specific flight will pass.

Flag - A code inserted in stored data to indicate, at some later time, that certain specific action is necessary for, or has taken place on, these data or this flight.

FLIDAP - Flight data position. That position in a center which accepts flight plans, prepares flight progress strips, distributes the strips, and transmits the data to adjoining centers where necessary. If the center is computer-equipped, the FLIDAP receives flight plans, revisions and other messages and enters them into the computer; removes the resulting flight progress strips from the printing device and distributes the strips to the proper sector.

Flight Progress Strips	-	The control strips prepared for a flight within a center's area. One strip is prepared for each fix over which, or adjacent to which, in the case of direct flights, the aircraft will pass. Each strip contains the flight information, including the estimated time over the fix for this flight. It is used by the controller to predict flight conflicts and to record the progress of the flight and changes to the flight data.
General Storage	-	A high-capacity storage medium using a group of large-diameter magnetic drums.
General Storage Address Register (GSAR)	-	A seven-digit register that holds the address of a record in general storage. This register is addressable as a source or destination.
General Storage Buffer (GSB)	-	A 120-character magnetic core register which functions as a buffer for data transmissions to and from general storage.
High Order	-	The leftmost character of a contiguous group of characters.
High-Speed Drum (HSD)	-	A small-diameter magnetic drum used as (the principal) part of the operating memory of the central computer.
High-Speed Input/ Output-to- Computer Control Lines (I/O-C, HSCL)	-	A group of four lines designated W, X, Y, and Z in each I/O unit, over which the I/O unit can send program variance information to the computer. They are always recognized and accompanied by a Special - Out condition during the next demand of this I/O unit.
High-Speed Paper Tape System	-	An input or output system consisting of a high-speed paper tape punch and reader, a Translate and Format Control Unit, and an Input/Output Control Unit to the computer.
High-Speed Printer	-	A printing device used primarily to print out the flight progress strips generated in the central computer, in proper format at high speed (about 420 lines per minute).

Identifier - A key of from one character to a full record in length used to search a prescribed area (table) in general storage or a magnetic tape. The first record with data identical to the identifier in the same relative location within the record will be found on a search-equal operation. The first record with data different from the identifier in the same relative location within the record will be found on a search-unequal operation.

Ignore Code - A nonprintable computer character used primarily to suppress comparisons.

Instruction Revolver (IRV) - This is actually two 12-character revolvers on the high-speed drum: IRVc and IRVn. IRVc is used to store the instruction word currently being executed; IRVn is used to store the next instruction word to be executed.

Instruction Word - A 12-character computer word that defines a computer instruction stored in the operating memory of the computer, usually in sequence with other instruction words on the high-speed drum or in a buffer.

An instruction word (internally) or program step (plugboard) consists of four main parts. The U or V1 address is the high-order three characters, and is used in most instructions to specify the first value operated on in an instruction. The V or V2 address is the 4th, 5th, and 6th most significant characters, and is used in most instructions to specify the second value operated on in the instruction. The W or R address is the 7th, 8th, and 9th most significant characters, and is used generally to specify the address at which the result of the instruction is stored.

		The operations code is the lowest order three characters and consists of a two-character process code to specify the basic operation to be performed, followed by a special character used to extend or modify the basic operation.
Instrument Flight Rules (IFR)	-	Rules specified in CAR-60 which regulate the flight of aircraft in weather conditions which do not permit flight in a see-and-be-seen condition.
Intercenter Message (ICM)	-	A message generated by a computer in a center for transmission to another center's computer on-line, via teletype.
Intermediate Fix	-	A fix along a route segment other than the entry or junction fix.
Junction Fix	-	A fix common to two consecutive route segments, the last fix of the first segment and the entry fix to the next segment.
Latitude-Longitude Fix	-	A fix expressed in degrees and minutes of latitude and longitude.
Low-Order	-	The rightmost character of contiguous group of characters.
Mileage Factor	-	See distance factor.
Modification Message	-	An M kind of message containing a change to some previously filed flight plan.
Multiplex Units	-	Two units in the Phase I system, one of which sequentially scans input stations to determine the station requesting service. The other sequentially scans output stations to determine the station designated by the Translate and Format Unit as the recipient of a message.
No-Find	-	A term used to indicate that the record containing the identifier searched for was not found in a search-equal operation, or that no record was found without the identifier in a search-unequal operation.

Nonfiled Junction	-	A junction fix not included in the filed flight plan data.
No-Print Fix	-	A fix for which a strip is printed only if it appears as a junction in the route of flight.
No-Print Test	-	A test of a fix to determine if a strip should be printed for it or not.
Not Ready	-	A condition of an I/O unit which means that the I/O unit is either inoperable or still engaged in a previously initiated operation.
OED	-	Operation Pulse/Enable Distribution. A group of circuits which time-sequence and control the execution of instructions in the computer. The start of a sequence or a portion of it may be selected manually at the console.
Off-Line	-	An operation performed by a unit or group of units independently and separate from the rest of the units in the system.
On-Line	-	An operation performed by a unit or group of units in conjunction with and as part of the whole system.
Pad Codes	-	A UFC-1 dot or period used as a fill character to pad out unused portions of fields of data on input and output.
PAK	-	Program Address Counter. An addressable three-character register used to sequence internally stored programs. When instruction words are obtained, they are always taken from the address specified by the contents of PAK. PAK may be set manually from the console.

Parent Message	-	The first part of a flight plan whose route is too long for one message and which requires a following X kind of message containing the remaining segments of route.
Posting	-	See fix posting.
Previous Fix	-	The print fix prior to the one under consideration in the route of flight.
Printer	-	See High-Speed Printer.
Print Fix	-	A fix for which a strip is always required for any flight which will pass over or adjacent to it.
Program Step	-	See instruction word. Specifically, a plugboard-defined computer instruction.
Program Stop	-	A preselected termination of processing under certain specific conditions to allow manual operations to be performed prior to resuming processing.
Proposed Flight Plan	-	An N kind of message containing the data required for a flight which is expected to take place at a future time.
Readout Message	-	A message to the computer requesting specific information or requesting a strip printout of a strip previously printed, a strip in storage awaiting future printout, or all remaining strips.
Ready	-	The condition of an I/O unit when it is capable of receiving an I/O instruction when placed on demand.
Record	-	A collection of contiguous alpha-numeric characters of a precribed length in a table in general storage.

Register	-	The hardware for storing a computer word or computer address. Registers A, B, C, or D are the registers used in arithmetic or logical operations.
Relative Distance/ Direction Fix or Point	-	A term used to describe the geographical location of a point by prefixing a fix with the distance and relative compass direction from the fix to this point (e.g., 1ØNE ACY).
Rho-Theta Fix or Point	-	A term used to describe the geographical location of a point by affixing a fix with a specific radial in degrees (theta) and the distance in nautical miles (rho) from this fix to this point (e.g., ACY 325Ø1Ø would be a point 325° and 1Ø nautical miles from Atlantic City).
Rider Strip	-	A flight progress strip containing the remainder of a route that was too long to fit on the original strip (more than seven segments). This strip also contains the aircraft identification and the fix identification, and will be placed with the original strip at this fix.
SDC	-	Station Direction Code. A code added to the coordination fix Table 7 from Table 4 or Table 6 to designate the adjoining center to which an intercenter message should be sent.
Search	-	An examination of records in a prescribed area of general storage (table) or of a magnetic tape, looking for a record containing data identical to the identifier (search equal) or different from the identifier (search unequal).
Search Probe	-	A test of the results of a search operation to determine if the search is completed, and if so, if the record requested was found or not.

Sector - A geographical area of defined dimensions within which IFR aircraft are under the jurisdiction of a specific air route traffic controller.

Segment - A portion of the route of flight defined as two points or fixes and the single joining flight path (direct or airway) between them.

Segment Counter - A number placed in each Table 7, determined during the airway or direct processing, showing which segment of the route within a center's area contains the fix for which this Table 7 was built. A junction is considered as being in the preceding segment (that is, the junction fix between segments 2 and 3 is considered as being in segment 2) for purposes of tailoring.

Selectors - A relay that is used as a two-way electrically operated switch; it allows the routing of pulses on D-C enables in one of two directions based upon its setting in either a select or nonselect condition.

Sequence Table - A table built on the high-speed drum during the processing of a direct-route segment. This table is used to place the Table 7 address of the intermediate fixes in this segment in proper sequence, according to the distance of each from the entry fix.

Shift - A left, right, or right-end around movement of data in a register during the processing of an instruction word immediately following the placement of a shift word into the shift revolver, or as wired during the processing of a program step on the plugboard.

Shift Revolver - A 12-character revolver on the high-speed drum used to store shift words. Addressable as a destination only.

Shift Word - An instruction word specifying the direction and amount of shifting to be performed on data when stored in the shift revolver prior to an

instruction word which requires shifting of the data used, or when probed by wiring during the execution of a plugboard step.

Sign - A character affixed to all fixes which are physically located outside of the center's area in tables. This character is used to find the proper center into which the flight will progress when leaving this center's area.

Sign Position - The low-order character position of a computer word.

Special Out - A signal produced by an I/O unit that has been placed "on demand" and is "ready" when at least one of the I/O to Computer, High-Speed control lines of that I/O unit is energized.

Starting Address - The first address of an area (table or routine) in general storage or of a routine on the high-speed drum.

Step Clear - A group of circuits which allow the computer operation to be interrupted and then continue as wired out of these hubs, even though a computer machine error has been detected.

Supervisory Typewriters - Two inquiry typewriters on line with the computer, one in the FLIDAP area and one with the console in the computer room. These typewriters are used by the program to notify the supervisors of the starting and completion of message processing, error conditions, and any other information pertinent to the system operation deemed necessary. The supervisory typewriter in the FLIDAP area may also be used as a strip printer if necessary.

Switch - An instruction which allows program variance, depending upon how it was set by some preceding instruction.

Synchrotape	-	A device to provide a means of entering messages directly into the system at the computer site. By use of an electric typewriter and a format control paper tape loop, messages typed on the typewriter are combined with data on the control tape to form an input message of fixed field lengths acceptable to the computer via the input Multiplex Unit.
Table	-	A group of records of prescribed length stored in a predetermined area in general storage. They may be predetermined constant data or program constructed, and stored for future reference.
Tailoring	-	The sequential removal of route segments from the original route when those segments are not necessary for the processing involved, or when the processing of that segment is completed.
Test/Normal Switch	-	Ten switches on Program Control Unit 1 (one for each I/O unit) which may be manually set to take the I/O unit off-line (test) or restore it on-line (normal).
Time-Out	-	A pulse generated on the plugboard when the timer in the computer has not received an "off" pulse within the set time limit after it received an "on" pulse.
Timer	-	A variable (by maintenance personnel) timing device, operated only by pulses from the plugboard.
Track	-	A narrow band on the periphery of the high-speed drum. Each track is capable of containing one blockette of data.

Translate and Format Control Unit (T&F Unit)		The communications link between the Multiplex Unit and the Input/Output Control Unit. It is in this unit that information to or from the Univac File Computer is translated between seven-level computer language and five-level teletype coding, depending upon the direction of information flow. It also checks all messages for errors, and provides a means of exercising programming control over system operation.
Visual Flight Rules (VFR)	-	Rules specified in CAR-60 governing the operation of flight in weather conditions which will permit the pilot to see and avoid other aircraft.
Word	-	Twelve characters; the operational unit of data in arithmetic and logical operations
Working Storage	-	Temporary memory storage areas into which data are stored while they are being manipulated.
X Max.	-	The eastern limit value of X in the X-Y grid that an intermediate fix may possess to be considered for further testing as a valid control fix along the course line.
X Min.	-	The western limit value of X in the X-Y grid that an intermediate fix may possess to be considered for further testing as a valid control fix along the course line.
X-Y Grid	-	A grid used in direct-route processing, constructed to encompass a specified control area and the adjacent control areas in the first quadrant of the plane so as to depict fixes within the quadrant as plus numeric values, referred to as the X-Y coordinates of the fix.
Y Max.	-	The northern limit value of Y in the X-Y grid that an intermediate fix may possess to be

considered for further testing as a valid control fix along the course line.

Y Min. - The southern limit value of Y in the X-Y grid table that an intermediate fix may possess to be considered for further testing as a valid control fix along the course line.