UNCLASSIFIED

AD NUMBER
AD378492
CLASSIFICATION CHANGES
TO: unclassified
FROM: confidential
LIMITATION CHANGES
TO: Approved for public release, distribution unlimited
FROM: Distribution: Further dissemination only as directed by Federal Aviation Administration, Washington, DC. Export Control, 06 SEP 1966, or higher DoD authority.
AUTHORITY
FAA, per notice 2 Jul 1973; FAA, per notice 2 Jul 1973

THIS PAGE IS UNCLASSIFIED

SECURITY MARKING

The classified or limited status of this report applies to each page, unless otherwise marked.
Separate page printouts MUST be marked accordingly.

THIS DOCUMENT CONTAINS INFORMATION AFFECTING THE NATIONAL DEFENSE OF THE UNITED STATES WITHIN THE MEANING OF THE ESPIONAGE LAWS, TITLE 18, U.S.C., SECTIONS 793 AND 794. THE TRANSMISSION OR THE REVELATION OF ITS CONTENTS IN ANY MANNER TO AN UNAUTHORIZED PERSON IS PROHIBITED BY LAW.

NOTICE: When government or other drawings, specifications or other data are used for any purpose other than in connection with a definitely related government procurement operation, the U. S. Government thereby incurs no responsibility, nor any obligation whatsoever; and the fact that the Government may have formulated, furnished, or in any way supplied the said drawings, specifications, or other data is not to be regarded by implication or otherwise as in any manner licensing the holder or any other person or corporation, or conveying any rights or permission to manufacture, use or sell any patented invention that may in any way be related thereto.

CONFIDENTIAL

Phase III Proposal,
(6) Supersonic Transport Development Program,

BOEING MODEL 2707,

AIRFRAME/ENGINE TECHNICAL AGREEMENT (GENERAL ELECTRIC) (U), (8)

(14) D6A10108-1

September 6, 1966

[redacted]

PREPARED BY W. J. Bakken APPROVED BY

APPROVED BY R. S. Newhart APPROVED BY

(10) W. J. Bakken

(15) Contract FA-SS-66-3

Prepared for

FEDERAL AVIATION AGENCY

Office of Supersonic Transport Development Program

DDC

JAN 25 1967

(11) 6 Sep 66

(12) 81p.

BOEING

SUPERSONIC TRANSPORT DIVISION

GROUP 4
DOWNGRADED AT 3 YEAR INTERVALS; DECLASSIFIED AFTER 12 YEARS.
DOD DIR 5200.10

FAA

Best Available Copy

(1102 097) CONFIDENTIAL

13

NOTICES

When Government drawings, specifications, or other data are used for any purpose other than in connection with a definitely related Government procurement operation, the United States Government thereby incurs no responsibility nor any obligation whatsoever; and the fact that the Government may have formulated, furnished, or in any way supplied the said drawings, specifications, or other data, is not to be regarded by implication or otherwise as in any manner licensing the holder or any other person or corporation, or conveying any rights or permission to manufacture, use, or sell any patented invention that may in any way be related thereto.

All distribution of this document is controlled. In addition to security requirements which apply to this document and must be met, it may be further distributed by the holder only with specific prior approval of:

Director of Supersonic Transport Development
Federal Aviation Agency
Washington, D. C. 20553

The distribution of this report is limited because it contains technology identifiable with items excluded from export by the Department of State (U. S. Export Control Act of 1949, as amended).

ACCESSION for
CFSTI WHITE SECTION
DDC BUFF SECTION
UNANNOUNCED
JUSTIFICATION
BY
DISTRIBUTION/AVAILABILITY CODES
DIST. AVAIL. and/or SPECIAL
15

CONTENTS

Section		Page
1.	INTRODUCTION	1
1.1	SCOPE	1
1.2	PURPOSE	1
2.	APPLICABLE DOCUMENTS	3
2.1	GOVERNMENT	3
2.2	NONGOVERNMENT	3
3.	DESIGN REQUIREMENTS	5
3.1	GENERAL REQUIREMENTS FOR DESIGN	5
3.1.1	Engine Specification Requirements	5
3.1.2	Performance	6
3.1.3	Environment	6
3.1.4	Fuel	13
3.1.5	Lubrication	13
3.1.6	Starting	13
3.1.7	Weight	13
3.1.8	Useful Life	13
3.1.9	Deleted	13
3.1.10	Flight Maneuvers	15
3.1.11	Connection Identification	16
3.1.12	External Flammable Fluid Lines	16
3.1.13	Containment	17
3.1.14	Accessibility	17
3.1.15	Documentation	17
3.2	SPECIFIC REQUIREMENTS FOR DESIGN	17
3.2.1	Guaranteed Performance and Noise Control	17
3.2.2	Engine Bleed Air	18
3.2.3	Accessory Drive Power Takeoff	20
3.2.4	Engine Mounting	24
3.2.5	Ground Handling Attachments	24
3.2.6	Engine Aircraft Accessory Provisions	27
3.2.7	Engine Exhaust and Reverser	27
3.2.8	Engine Control Systems	34
3.2.9	Engine Fuel System	36
3.2.10	Engine Lubrication System	39
3.2.11	Engine Drain System	40
3.2.12	Engine Electrical System	40
3.2.13	Engine Anti-Icing System	42
3.2.14	Engine Heat Rejection and Cooling	43
3.2.15	Engine Instrumentation	43
3.2.16	Engine Thrust Indication	45

CONTENTS (Continued)

Section		Page
3.2.17	Engine Starting Requirements	46
3.2.18	Idle	46
3.2.19	Engine Air Induction System	46
3.2.20	Stopping	49
3.2.21	Engine Vibration	49
3.2.22	Engine Foreign Object Ingestion Characteristics	50
3.2.23	Engine Fire Protection Provisions	50
4.	QUALIFICATION REQUIREMENTS	51
4.1	CERTIFICATION AND DEMONSTRATION REQUIREMENTS	51
4.1.1	General	51
4.1.2	FTS Substantiation Requirements (Phase III)	51
4.1.3	Type Certification Requirements (Phases IV and V)	52
4.1.4	Guaranteed Performance Demonstration Requirements (Phases III, IV, and V)	52
4.2	ENGINE/AIRFRAME STATIC PERFORMANCE CALIBRATION REQUIREMENTS (PHASE III)	52
4.2.1	General	52
4.2.2	Test Hardware	53
4.2.3	Engine Ground Rig Performance Calibration Testing	53
4.3	GUARANTEED ENGINE PERFORMANCE DEMONSTRATION (PHASES III AND IV OR V)	53
4.3.1	General	53
4.3.2	Basic Engine Performance	55
4.3.3	Installed Engine Performance	56
4.3.4	Noise Demonstration (Phases as Indicated)	56
4.3.5	Engine Airflow Demonstration (Phase III)	57
4.3.6	Thrust Reverser Demonstration (Phases III and IV)	57
4.3.7	Vibration Demonstration (Phases as Indicated)	57
4.3.8	Bleed Air Quality Demonstration (Phase IV)	58
4.3.9	Inlet Distortion Tolerance Demonstration (Phase III)	58
5.	COMPATIBILITY DEVELOPMENT PLAN (PHASE III)	61
5.1	GENERAL	61
5.2	INLET/ENGINE COMPATIBILITY PLAN (PHASE III)	61
5.2.1	Boeing Inlet/Engine Compatibility Tests	61
5.2.2	General Electric Inlet/Engine Compatibility Tests	65

CONTENTS (Concluded)

Section		Page
5.2.3	Inlet/Engine Dynamic Analysis	65
5.3	EXHAUST SYSTEM INTEGRATION TESTS (PHASE II)	66
5.3.1	Thrust Reverser Development	69
5.3.2	Nozzle Development	64
5.3.3	Noise Suppression Development	64
5.4	ENGINE/AIRFRAME INSTALLATION TESTS (PHASE III)	66
5.4.1	Engine/Airframe Installation Requirements	66
5.4.2	Boeing Ground Rig Tests	66
5.4.3	General Electric Ground Rig Tests	66
5.5	PHASE III FLIGHT TEST PROGRAM	66
5.5.1	General	66
5.5.2	Air Induction System Performance and Operation	66
5.5.3	Engine Performance and Operation	67
5.5.4	Evaluation of Propulsion Nacelle and System	67
5.5.5	Thrust Reverser Performance and Operation	67
5.5.6	Noise Surveys	67
6.	PRODUCT ASSURANCE REQUIREMENTS	69
6.1	BASIC CONCEPTS AND DEFINITIONS	69
6.2	RESPONSIBILITIES	69
6.2.1	General	69
6.2.2	Boeing Responsibilities	69
6.2.3	General Electric Responsibilities	70
6.2.4	Interface Elements	70
6.2.5	Problem Analysis and Corrective Action	70
6.3	RELIABILITY	71
6.3.1	Design Objectives	71
6.3.2	Quality Assurance Provisions	73
6.3.3	Data Requirements	75
6.4	SAFETY	77
6.4.1	General	77
6.4.2	Boeing System Safety Responsibilities	77
6.4.3	General Electric Responsibilities	77
6.5	MAINTAINABILITY	78
6.5.1	General	78
6.5.2	Design Objectives	78
6.5.3	Validation	79
6.5.4	Data Requirements	80

D6A10128-1

ILLUSTRATIONS

Figure		Page
1	Flight Ambient Temperature Envelope	11
2	Ground Ambient Temperature Envelope	12
3	Engine Operating Envelope	14
4	Inlet Total Pressure Recovery	15
5	Engine Attitude Limits	16
6	Bleed Air Port Configuration	20
7	Engine Configuration	25
8	Engine Mounting System Loading	28
9	Compressor Front Flange Loading	29
10	Power Takeoff Pad Configuration	30
11	Hydraulic Pump Envelope	30
12	Exhaust Nozzle Thrust and Drag	32
13	Throttle Schedule	34
14	Narrow Band (CW) Conducted Interference Limits Using Stabilization Network	42
15	Broad Band and Pulsed (CW) Conducted Interference Limits Using Stabilization Network	43
16	Narrow Band (CW) Radiated Interference Limits	44
17	Broad Band and Pulsed (CW) Radiated Interference Limits	45
18	Failure Mode, Effect and Criticality Analysis	73

TABLES

Table		Page
I	Performance Guarantees	7 & 9
II	Noise Levels	18
III	Bleed Air Contamination Limits	19
IV	Horsepower Extraction	20
V	Engine Bleed Air Flow Requirements	21
VI	Design Load Factors	26 & 27
VII	Electrical Interference Limits	41
VIII	Reliability Objectives	71
IX	Maintainability Requirements	73

1. INTRODUCTION

In compliance with Section I Paragraph IX of the Phase III Request for Proposal this document is the technical portion of the Airframe/Engine Agreement. The document is part B of the Airframe/Engine Agreement D6A10188-1 and the approval signatures on part A separately bound are also equally applicable to this part.

1.1 SCOPE

This agreement establishes the performance, design, fabrication and testing requirements for a turbojet engine for the Boeing Model B-2707 (GE) supersonic airplane within the constraints established by the SST — System Responsibility Agreement.

1.2 PURPOSE

The purpose of this technical agreement is to define the responsibilities of each party to the agreement for the physical, functional and program requirements of the engine/airframe system.

2. APPLICABLE DOCUMENTS

2.1 GOVERNMENT

The following documents, of the issue date shown, form a part of this agreement to the extent specified herein.

2.1.1 AND 10050 — Air Force-Navy Aeronautical Design Standard "Bosses, Standard Dimensions for Gasket Seal Straight Thread" dated 18 July 1956.

2.1.2 MIL-E-005007C — Military Specification "Engine, Gas Turbine, Preparation for Storage and Shipment of, Process for" dated March 25, 1965.

2.1.3 MIL-S-8879 — Military Specification "Screw Threads, Standard Aeronautical" dated July 13, 1961.

2.1.4 FAR 33 — Federal Aviation Regulations "Airworthiness Standard, Aircraft Engines" dated February 1, 1965.

2.1.5 FAR 1 — Federal Aviation Regulations "Definitions and Abbreviations" dated May 18, 1964.

2.1.6 British Civil Airworthiness Requirements — Section G, dated November [illegible] 1965.

2.1.7 Air [illegible] Specification Bulletin 526 — "Contaminants, Cabin Air, Maximum Allowable Concentration of" dated February 8, 1961.

2.1.8 FAR 21 — Federal Aviation Regulations "Certification Procedures, Products and Parts" dated February 1, 1965.

2.1.9 FAR 25 — Federal Aviation Regulations Airworthiness Standards, "Transport Category Airplanes and Tentative Airworthiness Standards for Supersonic Transports."

2.1.10 TT-S 735 Federal Specification Standard Test Fluids, Hydrocarbon.

2.1.11 MIL-E 5007A "Military Specification Engines, Aircraft, Turbojet, General Specification for" dated 31 July 1961.

2.2 NONGOVERNMENT

The following documents of the issue date shown, form a part of this agreement to the extent specified herein. One copy of each document listed below and marked with an asterisk is to be furnished to General Electric with each copy of this agreement.

2.2.1 AS616 — SAE Aerospace Standard "Drive-Accessory, 8.000 Pitch Diameter, Q.A.D." Issued 12/15/63.

2.2.2 AS520 — SAE Aerospace Standard "Drive-Accessory, 6.500 Pilot Diameter, Q.A.D." issued 12/15/68.

2.2.3 AS522 — SAE Aerospace Standard "Flange-Accessory, 3.000 Pilot Diameter, Q.A.D." issued 12/15/68.

2.2.4 D50TF2-82 — General Electric Turbine Fuel Specification (which includes Type Jet A and Type Jet A-1), dated 26 July, 1966.

2.2.5 D50TF3-81 Class A Lubricating Oil, 2 August, 1966.

2.2.6 SAE 870, "Jet Noise Prediction," dated 10 July, 1965.

2.2.7 Deleted

2.2.8 SAE Document ARP 865 "Definitions and Procedures for Computing the Perceived Noise Level of Aircraft Noise."

2.2.9 SAE Document ARP 866 "Standard Values of Atmospheric Absorption as a Function of Temperature and Humidity for use in Evaluating Aircraft Fly-over Noise."

2.2.10 Boeing Drawing 10-61105, Accessory Power Drive System Engine Driven Remote.

2.2.11 Boeing Standard DAC F22AC "Flange, Coupling" Specification Control Drawing.

2.2.12 Boeing Document D6A10185-1 (GE) Engine/Airframe Agreement.

2.2.13 Boeing Document D6A10111-1 (GE) Propulsion Subsystems Specification.

2.2.14 GE4/J5P Engine Model Specification E 2050, dated 6 September, 1966.

2.2.15 GE4/J5P Engine Installation Requirements Specification M50TF1066, dated 6 September, 1966.

2.2.16 GE4/J5P Engine Installation Drawing, 4018010-471.

2.2.17 Boeing Document D6A10007-1 "Coordinated Inlet/Engine Test Plan."

3. DESIGN REQUIREMENTS

3.1 GENERAL REQUIREMENTS FOR DESIGN

3.1.1 Engine Specification Requirements

3.1.1.1 Engine Model Specification

An engine model specification, defining engine performance and design in compliance with the requirements of this Engine/Airframe Technical Agreement shall be prepared by General Electric (GE) for use in airplane performance determination. The Boeing approved Engine Model Specification, Ref. Par. 2.2.14, shall be a portion of this Engine/Airframe Technical Agreement to the extent specified herein.

3.1.1.2 Engine Installation Drawing

An engine installation drawing, Ref. Par. 2.2.10, defining the installation envelope, overall dimensions, support details, engine control locations and motion, accessory locations, drains installation, details, instrumentation provisions, and all other coordinated engine-airframe installation requirements, shall be prepared by GE and shall be a portion of this Engine/Airframe Technical Agreement to the extent specified herein.

3.1.1.2.1 Supporting Data

General Electric shall furnish a list of essential engine accessories and engine capabilities and provisions for installation of aircraft accessories in accordance with the procedures outlined in Ref. 2.2.12.

General Electric shall furnish system diagrams of the electrical, fuel, lubrication, and other systems such as thrust reverser actuation and secondary air system.

3.1.1.3 Card Deck Programs

A card deck program shall be provided capable of running on a highspeed computer. This program will define estimated engine performance consistent with the guaranteed engine performance, and will be used to calculate guaranteed airplane performance data. Idle thrust may be average. The program will be based on a cycle match calculation rather than a program which uses a multiplicity of tables to generate performance data. The program shall be capable of generating data at any power setting from idle to takeoff at any altitude, Mach number, or ambient temperature within the engine operating envelope. The program shall be capable of making corrections for horsepower extraction, inlet recovery, airbleed, and exhaust system losses.

The program will be used as subroutine to the Boeing installed performance program. Self-contained input or output is not required or desired. The program shall not use more than 25,000 decimal core locations including common core locations but excluding system subroutines unless source decks are provided.

The card deck program will be used as the prime data source and shall be a portion of this document. Performance curves, if provided, shall be in agreement with the card-deck program and maintained up-to-date.

3.1.1.4 Analytical Model for Engine-Inlet Dynamic Studies
General Electric shall submit an analytical representation of the engine and its control systems suitable for use in inlet-engine dynamic simulation studies at Boeing. The simulation shall be valid over the operating performance envelope of the engine as specified in Fig. 3. The effect of inlet distortion on compressor operation and stall margin shall be included in the simulation.

The simulation shall allow determination of the effects of normal engine transients on inlet and inlet control operation. These transients include:

a. Throttle movements including "full burst" and "chop"

b. Augmentor "lightoff" and "shutdown"

c. Inflight engine "shutdown" and "restart," including windmill brake operation for flight conditions above Mach 1.5.

Also, the engine simulation shall be used to determine the transient effects of abnormal engine operation on inlet and control operation. These transients include:

d. Compressor stall and recovery

e. Main burner blowout

f. Augmentor blowout

g. Anticipated engine failure conditions (i.e., nozzle failure)

3.1.2 Performance
The estimated engine performance shall be defined in the engine performance data deck per reference Par. 2.2.14. This performance shall be consistent with the guaranteed performance points shown in Table I. All production engines shall be capable of demonstrating the guaranteed engine performance. Engine performance includes the installed nozzle performance (C_{fgeq}, Inst) as defined in Par. 3.2.7.1. The values shown are based on an isolated nacelle in freestream with uniform pressure distribution, with a diameter at the nozzle ejector doors of 80 inches, converging to a maximum nozzle exit diameter of 74.2 inches, and include the incremental drag due to external flow through the ejector doors and the boattail drag on the trailing edge flaps. The drag due to the conical afterbody shape extended to the maximum nozzle exit diameter of 74.2 inches is included in airplane drag.

3.1.3 Environment

3.1.3.1 Ambient Temperature Conditions
The complete engine shall perform satisfactorily under ambient temperature defined by Figs. 1 and 2, as limited by the P_2 - T_2 engine envelope per reference Par. 2.2.16.

Table I. Performance Guaran

TYPE CERTIFICATIO						
Power Setting	Pressure Altitude (Ft)	Ambient Temp	Mach Number	Ram Recovery [2]	Minimum Net Thrust (lb)	Maxi SF (lb/h
Maximum Augmented	0	Std	0	0.00	50,000	1.7
Maximum Non-Augmented	0	Std	0	0.00	40,400	1.0
Maximum Augmented	0	Std +40°F	0	0.00	51,400	1.8
Maximum Non-Augmented	0	Std +40°F	0	0.00	40,100	1.0
Maximum Augmented	45,000	Std	1.2	0.080	25,100	1.7
Maximum Augmented	45,000	Std +10°C	1.2	0.080	20,700	1.7
Partial Augmented	65,000	Std	2.7	0.01	15,000	1.5
Partial Augmented	65,000	Std +10°C	2.61	0.014	15,000	1.0
Partial Non-Augmented	50,150	Std	0.85	0.09	5,000	1.1
Idle	0	Std	0	0.07	2100 Max	151
Idle	50,000	Std	1.2	0.080		144
Maximum Reverse	0	Std	0	0.00 **1.00	-20,200 -24,500	

**Reverser performance may be demonstrated on a ground test rig with Bellmouth inlet

[1] Fuel Flow in Pounds Per Hour

[2] Ram Recovery Available at Secondary Air System Entry

*Ambient secondary pressure at exhaust nozzle shroud ($P_{S1} = P_{AMB}$)

[3] St

[4] St

[5] To

1. Performance Guarantees

YPE CERTIFICATION					
Minimum Net Thrust (lb)	Maximum SFC (lb/hr/lb)	Airflow +0, -2% lb/sec	Power Extraction (HP) ±5%	Estimated Secondary Air W_{s_1}/W_2	Bleed Air (lb/sec) ±5%
50,050	1.70	500	450	*	0
40,400	1.07	505	450	*	0
51,400	1.80	504	450	*	0
40,100	1.08	504	450	*	0
22,100	1.70	221	450	.000	0
20,700	1.70	217	450	.003	0
15,000	1.51	201	450	.030	0
15,000	1.03	250	450	.040	0
5,000	1.10	103	450	.004	0
2100 Max	4510		300	*	2.1
	1440		500		1.85
-20,200 -24,500			550	*	2.1

ith Bellmouth Inlet

Steady State Airflow Tolerance ± 2% except as indicated

Steady State Airflow Tolerance ± 1 1/2%

Tolerance to be established

Table I. (Concluded)

FLIGHT TEST STATUS ENGI						
Power Setting	Pressure Altitude (Ft)	Ambient Temp	Mach Number	Ram Recovery [2]	Minimum Net Thrust (lb)	Maxi SF (lb/h
Maximum Augmented	0	Std	0	0.00	56,000	1.0
Maximum Non-Augmented	0	Std	0	0.00	44,000	1.1
Maximum Non-Augmented	0	Std +40°F	0	0.00	48,000	1.7
Maximum Augmented	0	Std +40°F	0	0.00	38,100	1.1
Maximum Augmented	45,000	Std	1.2	0.080	21,000	1.7
Maximum Augmented	45,000	Std +10°C	1.2	0.080	10,700	1.7
Partial Augmented	65,000	Std	2.7	0.01	15,000	1.5
Partial Augmented	65,000	Std +10°C	2.61	0.014	15,000	1.7
Partial Non-Augmente	30,150	Std	0.85	0.00	5,000	1.2
Idle	0	Std	0	0.07	2,100 Max	4.7
Idle	50,000	Std	1.2	0.080		1.5
Maximum Reverse	0	Std	0	0.00 **1.00	-22,000 -20,000	

[1] Fuel Flow in pounds per hour

[2] Ram recovery available at secondary air system entry

*Ambient secondary pressure at exhaust nozzle shroud ($P_{SI} = P_{AMB}$)

**Reverser performance may be demonstrated in a ground test rig with Bellmouth Inlet

Table I. (Concluded)

HIT TEST STATUS ENGINE

Minimum Net Thrust (lb)	Maximum SFC (lb/hr/lb)	Airflow ± 2% (lb/sec)	Power Extraction (HP) ±5%	Estimated Secondary Air w_{s_1}/w_2	Bleed Air (lb/sec) ±5%
56,000	1.07	506	450	*	0
44,000	1.13	505	450	*	0
40,000	1.70	534	450	*	0
38,100	1.14	534	450	*	0
21,000	1.76	221	450	18	0
19,700	1.79	217	450	.063	0
15,000	1.59	201	450	.033	0
15,000	1.71	253	450	.040	0
5,000	1.22	[3] 103	450	.004	0
2,100 Max	[1] 4,740		300	*	2.1
	[1] 1,510		500		1.85
-22,000 -23,300			550	*	2.1

[3] Tolerance to be established

tem entry

AMB)
rig with Bellmouth inlet

2

D6A10198-1

0
(10 BLANK)

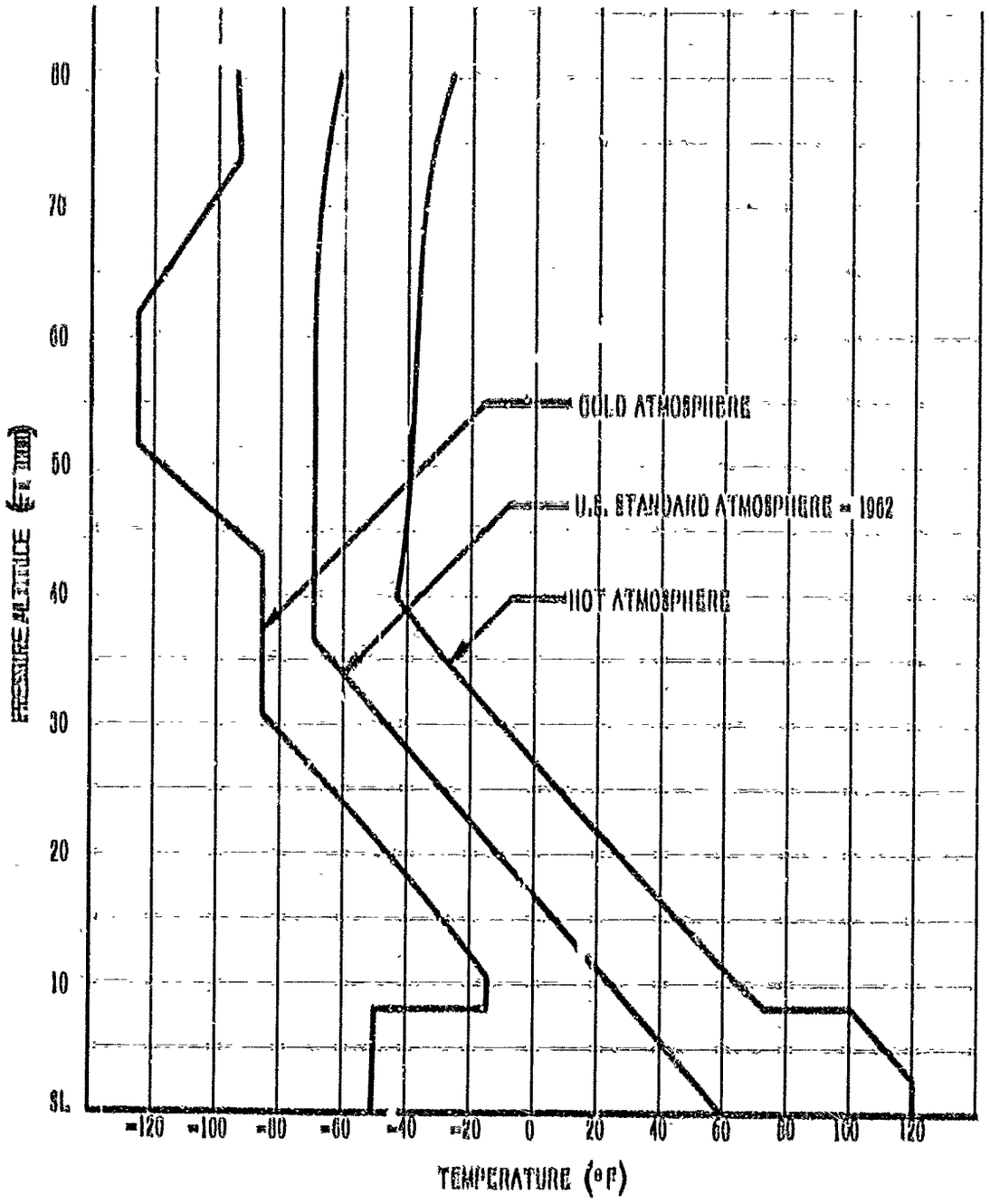

Figure 1. Flight Ambient Temperature Envelope

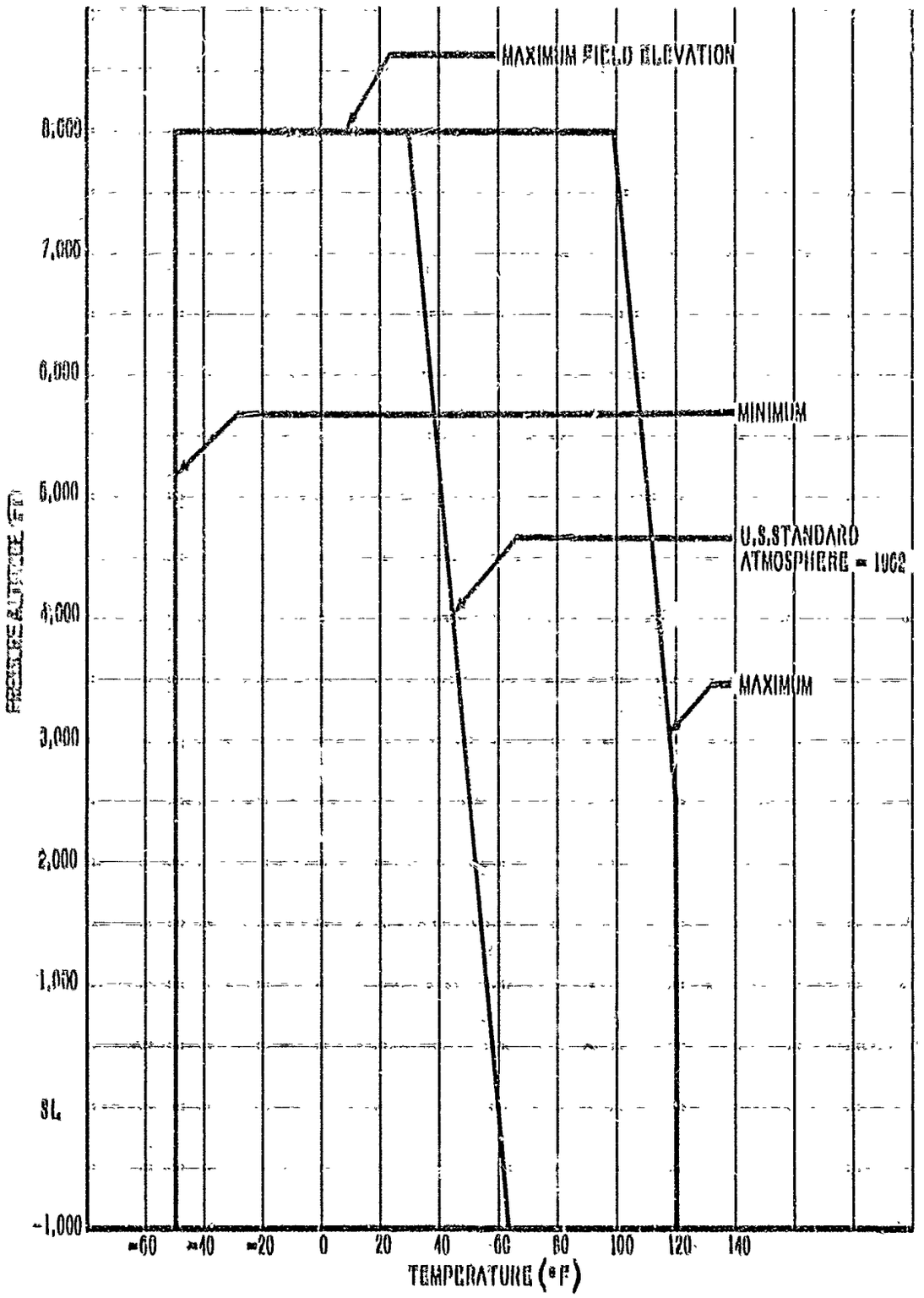

Figure-2. Ground Ambient Temperature Envelope

08A19198-1

3.1.3.1.1 Design Inlet Temperatures
Maximum air stagnation temperature will be 500°F with an overshoot to a stagnation temperature of 540°F, based on a variable ratio of specific heats for air. The stagnation temperature will not exceed 500°F for more than 1.5 min.

3.1.3.1.2 Operating Envelope
The engine and engine systems shall function satisfactorily within the operating envelope as defined in Figs. 3 and 4.

3.1.3.1.3 Usage
The intended usage of the engine is for powering a supersonic transport aircraft.

3.1.3.1.4 Engine Nacelle Temperature
The engine and components shall perform satisfactorily during normal operation with that portion of the engine forward of the firewall surrounded by stagnant air at a maximum average temperature of 350°F. Components located at the forward half of the nacelle accessory compartment will not be exposed to more than 900°F.

3.1.4 Fuel
The engine shall function satisfactorily throughout its complete operating range for any steady state operating conditions when using fuels conforming to or having any of the variations permitted by Ref. 2.2.4.

3.1.5 Lubrication
The engine shall function satisfactorily throughout its complete operating range for any steady-state and transient operating condition when lubricants conforming to and having any of the variations in characteristics permitted by Ref. 2.2.5 are being used.

3.1.6 Starting
The engine shall be capable of ground starting from -1,000 ft to +8,000 ft within the ambient temperature conditions as defined in Fig. 2, subject to fuel with a maximum viscosity of 12 centistokes and lube oil with a maximum viscosity of 10,000 centistokes.

3.1.7 Weight

3.1.7.1 Basic Engine
The weight of the engine, as defined in the Model Specification shall not exceed 11,257 lb.

3.1.8 Useful Life
Engine parts and components shall be designed for a useful life including repair or replacement consistent with an airplane normal service life expectancy of at least 50,000 hr. General Electric shall undertake the design and development of improved components or parts and/or repair procedures for the components or parts, as shown to be required by airline service.

3.1.9 Deleted

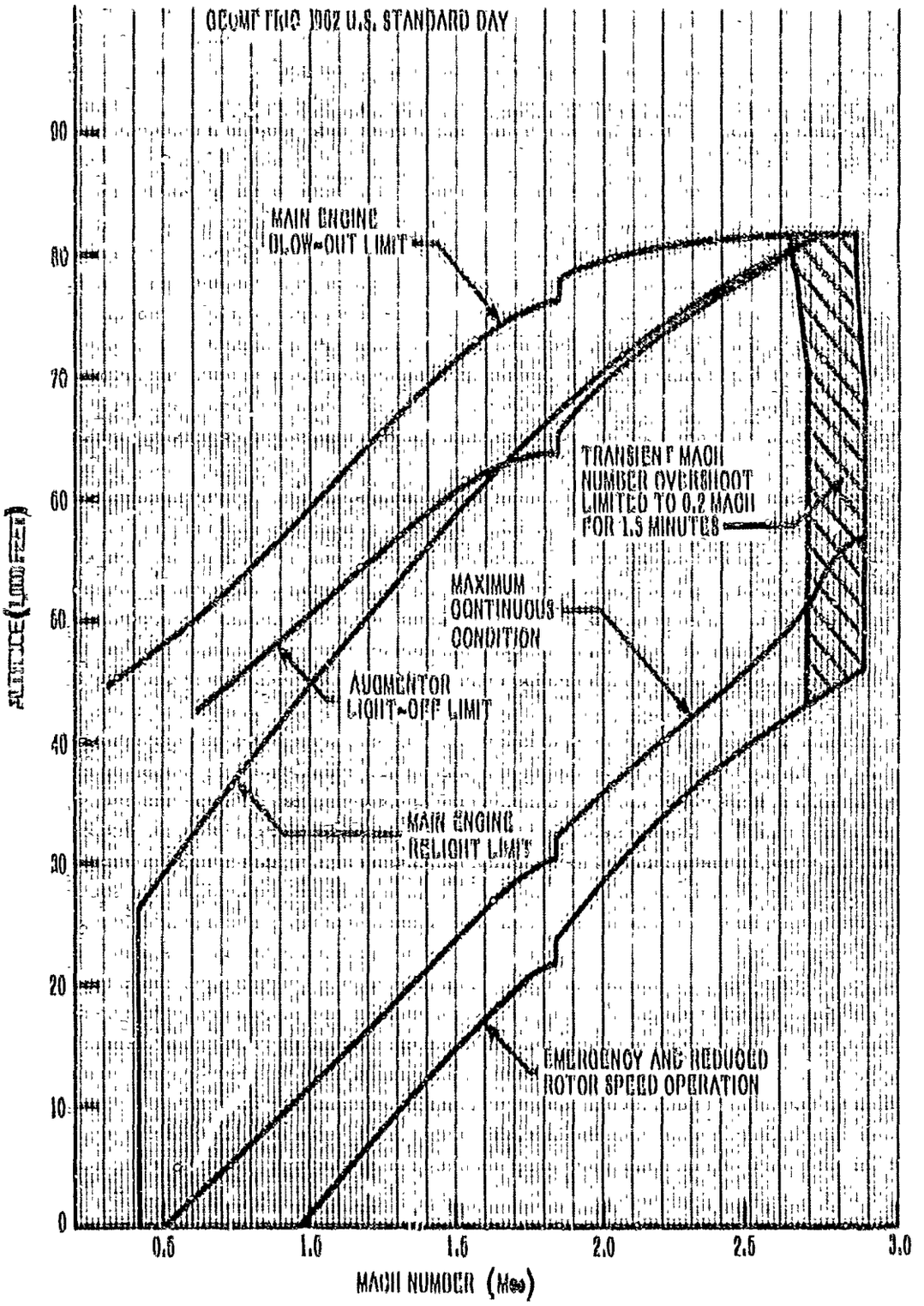

Figure 3. Engine Operating Envelope

D6A10195-1

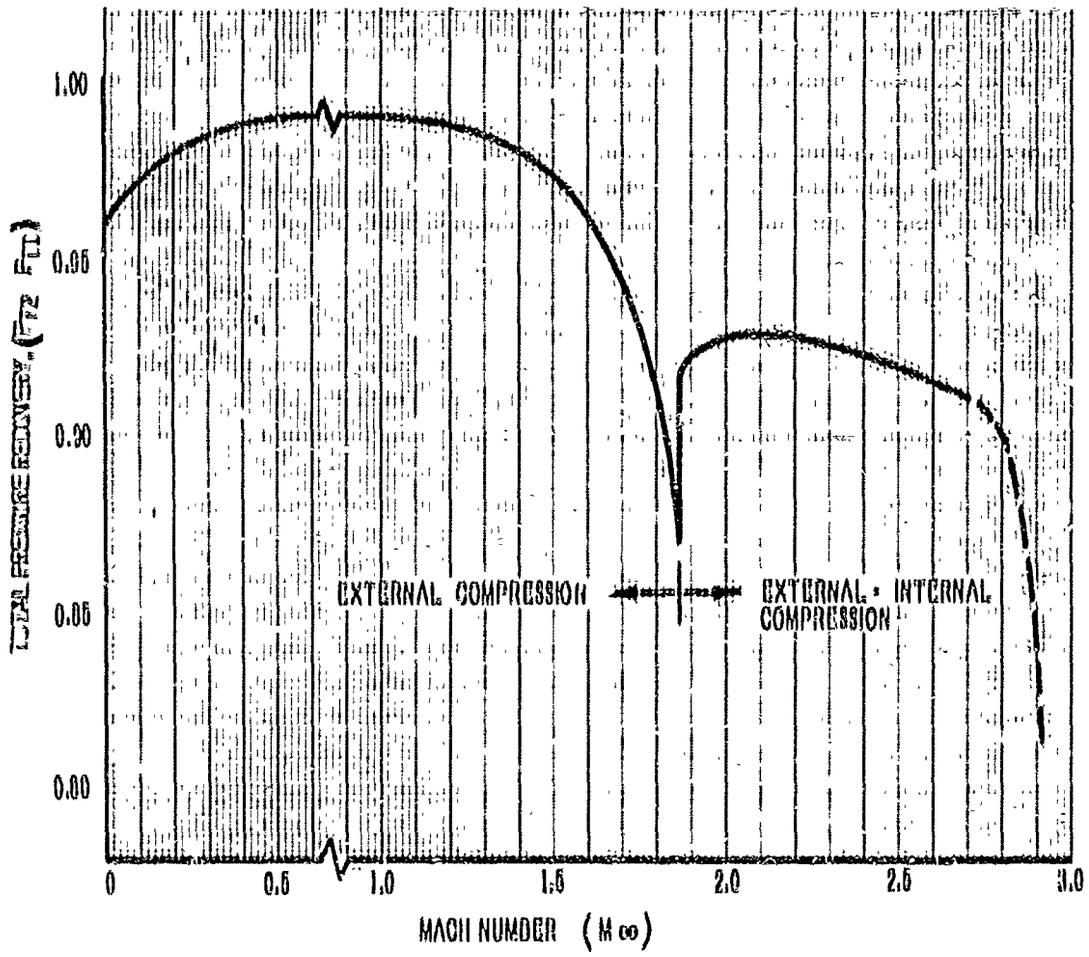

Figure-4. Inlet Total Pressure Recovery

0.1.10 Flight Maneuvers

0.1.10.1 Attitude
The engine shall f nction satisfactorily under the flight attitudes defined in Fig. 5, under the following conditions:

a. Continuous operation shall be possible during vertical accelerations of 0.5 to 2.0 g positive.

b. Operation for 60 sec when subjected to vertical accelerations from 0.1 to 0.5 g positive, and from 2.0 to 3.5 g positive.

c. Operation for 10 sec when subjected to vertical accelerations from 0.1 to 1.0 g negative.

d. Operation for 5 sec when subjected to 0 g condition (±0.1 g).

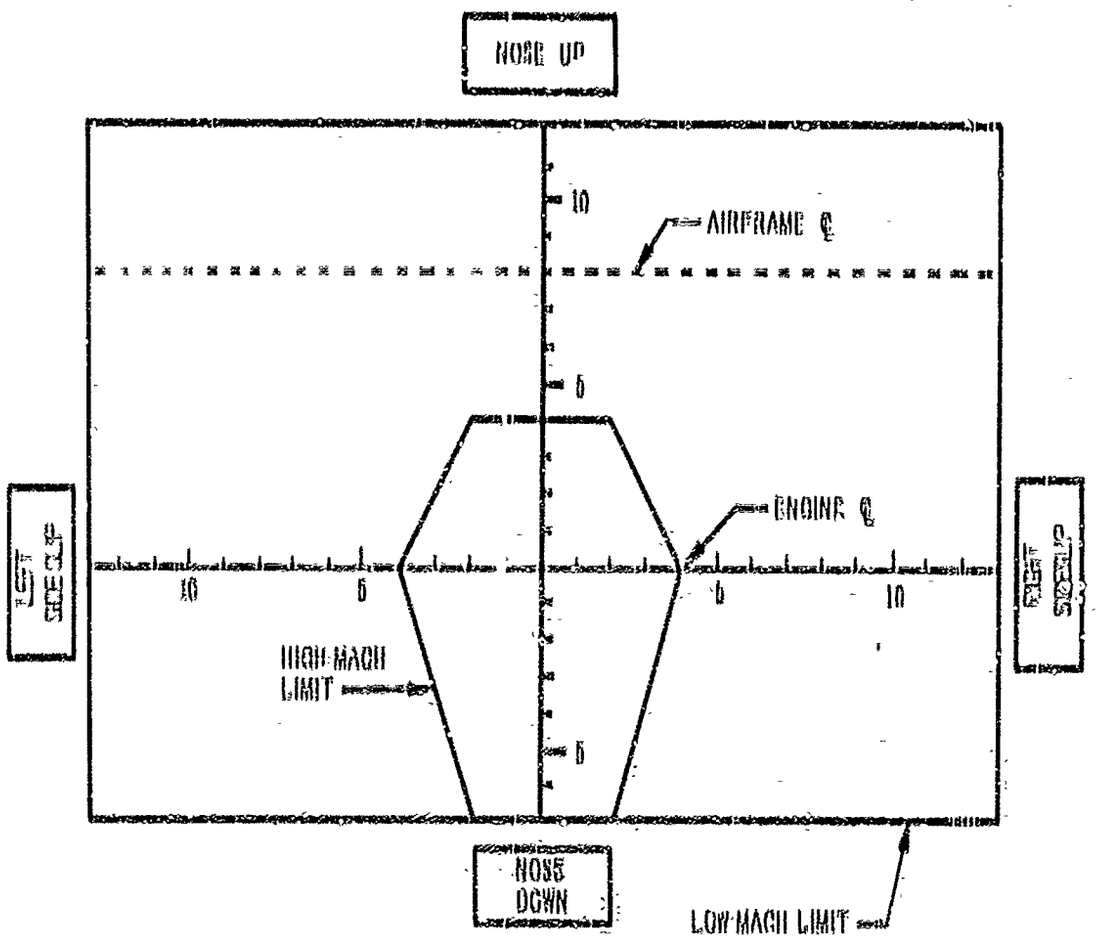

Figure 5. Engine Attitude Limits

e. Operation for 15 sec when subjected to side accelerations from 0.5 to 1.7 g (from either side).

f. Continuous operation when subjected to fore and aft accelerations from 0 to 0.5 g.

g. Continuous operation when subjected to side accelerations from 0 to 0.5 g (from either side).

3.1.11 Connection Identification
Insofar as possible, the engine shall be permanently marked to indicate all airframe connections shown on the Installation Drawing for instrumentation, electrical, fuel, oil, and air connections.

3.1.12 External Flammable Fluid Lines
All external lines and fittings which convey flammable fluids shall be fireproof as defined in Ref. Par. 3.1.5.

3.1.13 Containment
The engine shall be so constructed to contain with the outer case of the engine all compressor blades, stator vanes, nozzle guide vanes or turbine blades that fail and become detached from the engine during operation throughout the entire engine power range.

3.1.14 Accessibility
Insofar as possible, those parts of the engine requiring routine service checking, adjustment, or replacement shall be made accessible for servicing or replacement without teardown of the engine or removal of any other part, component or accessory.

3.1.14.1 Engine Service Points
Engine components which require periodic servicing shall have service fittings located so that any spillage or drainage is prevented from falling on the engine.

3.1.15 Documentation
General Electric shall furnish to Boeing specifically agreed upon documentation of performance for both engine and the engine-furnished components as an aid to Boeing in obtaining airplane certification.

3.2 SPECIFIC REQUIREMENTS FOR DESIGN

3.2.1 Guaranteed Performance and Noise Control

3.2.1.1 Performance
In addition to the guaranteed calibration stand performance shown in the Engine Model Specification, Ref. Par. 2.2.14, the engine shall meet the flight performance points shown in Table I. Additional engine performance guarantees if required, will be mutually established.

3.2.1.2 Noise Control

3.2.1.2.1 Noise Levels
The noise levels generated by one engine shall not exceed the values in Table II at any point along a line parallel to and 500 ft from the axis of the engine. Measurements may be made either on the line or on an arc of 500 ft radius and extrapolated to the line by SAE procedures. The engine shall be in compliance with these values under the following conditions:

a. Static operation

b. Bellmouth inlet

c. Production nozzle and reverser

d. Standard day at sea level at 59°F and 70 percent relative humidity

e. Wind at 5 kn or less with no gusts

f. Flat terrain at 500 ft radius

g. Engine centerline height equivalent to 2 exhaust nozzle diameters above the ground.

The noise level measured as specified in Par. 3.2.1.2.1 shall not exceed the following values for the conditions stated:

Table II. Noise Levels

	PNdb MAX
Maximum augmented thrust	108.5
28,000 lb thrust	100.0
12,000 lb thrust	100.0

Both GE and Boeing shall coordinate and keep each other informed throughout the engine development program of the status of their efforts in meeting the noise requirements.

3.2.1.2.2 Noise Prediction
General Electric may use Ref. Par. 2.2.6 in predicting the engine noise level. The use of this prediction system does not relieve General Electric from meeting the required noise level.

3.2.1.2.3 Engine Acoustical Environment
The engine shall be designed and constructed to function for 100-hr duration without failure in any of the engine components as a result of operating at a noise level of 155 db.

3.2.2 Engine Air Bleed

3.2-2.1 Air-Conditioning
The engine shall provide bleed air for air-conditioning and pressurization of the passenger and crew compartments which satisfies the following requirements:

3.2.2.1.1 Quality of Bleed Air
Dirt or other foreign particle concentration in the bleed air after expansion to atmospheric pressure shall not exceed that of free air ahead of the engine inlet on a per unit volume basis.

3.2.2.1.2 Contamination
The air at the engine bleed ports shall not contain quantities of engine generated noxious, toxic or irritating substances above the maximum threshold limit values of the substances shown in Table III.

Table III. Bleed Air Contamination Limits

Substances	Parts per million
Carbon dioxide	5,000.0
Carbon monoxide	50.0
Carbon tetrachloride	50.0
Decaborane	0.05
Diborane	0.1
Pentaborane	0.01
Ethyl alcohol (ethanol)	1,000.0
Fluorine	0.1
Fuels, aviation	250.0
Hydrogen peroxide	1.0
Methyl alcohol	200.0
Methyl bromide	20.0
Monochlorobromomethane	40.0
Nitrogen dioxide	5.0
Oil breakdown products (aldehydes, acrolein)	1.0
Ozone	0.1
Unsym-dimethyl hydrazine	0.5

The air shall contain a total of not more than 5 mg/cubic meter of submicron particles.

9.2.3.1.3 Seals
Accessory seals, bearing seals, and oil lines shall be designed so that a single failure (except an engine bearing failure) cannot result in bleed air contamination. General Electric shall submit a failure analysis to Boeing to demonstrate how the design meets this requirement.

3.2.2.1.4 Quantity of Bleed Air
One bleed port as shown in Fig. 3, shall be provided to supply the bleed air for air conditioning defined in Table V.

3.2.2.2 Inlet Anti-Icing
One bleed port as shown in Fig. 3, shall be provided to supply the bleed air for inlet anti-icing defined in Table V.

3.2.3 Accessory Drive Power Takeoff

3.2.3.1 Accessory Drive Power Takeoff Provisions
The engine shall provide a drive pad to allow the attachment of a Boeing-furnished external shaft and a remotely located airframe accessory gear box. Accessories mounted on the gear box include the main hydraulic pumps, ac generator and speed control, coolant air fan, cabin air boost compressor and air turbine starter. The pad and power takeoff mating shaft connection serves as (a) a means to obtain power from the engine to drive the gear box and-mounted accessories, and (b) a means to transmit power from the accessory gear box to the engine rotor for starting.

The drive pad, similar to Ref. Par. 2.2.2 except for horsepower, shall be provided with mounting flange, location details, and direction of rotation as shown on the engine installation drawing. The pad will be designed to be compatible with the accessory drive system per Ref. 2.2.10.

3.2.3.1.1 Design Power Extraction
The drive pad shall be designed to transmit the power loads shown in Table IV below.

Cyclic load variations shall be ±10 hp at a frequency of 1 cycle per minute with the nominal continuous loads shown in Table IV.

Table IV. Horsepower Extraction

Operation	Duration	ENGINE SPEED		
		5,050 rpm	Ground Idle	61% rpm
Continuous		550	205	405
Intermittent	4 min/flight	647	442	660
	1 min/flight	1050	610	802
Maximum	10 sec/100hr	1090	665	885

3.2.3.1.2 Engine Starting
The pad shall be designed to transmit the torque required for engine start.

Table V. Engine Bleed A

Flight Condition	Mach Number	Altitude (Feet)	Ram Recovery	Bleed
				Inlet Anti-Icin (lb/sec
Ground and climb	0 -0.4 0.4-1.0	SL 30,000	0.08 0.00	3.0 2.0
Climb	1.08 1.06 2.5 2.5 2.5	40,000 50,000 60,000 70,000 75,000	0.088 0.082 0.018 0.018 0.018	
Descent	2.5 2.5 1.55 1.15 0.05	75,000 70,000 60,000 50,000 40,000	0.018 0.018 0.070 0.087 0.080	
Descent and hold Ground	0.6 0	30,000 SL	0.00 0.08	5.0 3.0

\+ Reflects requirement for motoring ADS plus air-conditioning.
++ Low Idle, 54 percent rpm.
Standard day conditions.
▷ Minimum pressures measured downstream of the engine bleed port.

Engine Bleed Air Flow Requirements

Bleed Air Requirements + + +			Bleed Pressure (psia ±5%)	Maximum Bleed Temp (°F)	Anti-Icing Pressure (psia)
Inlet Anti-Icing (lb/sec)	Air Conditioning				
	Normal (lb/sec)	Maximum (*lb/sec)			
0.0	2.1	5.30	60	1,100°F	20-30
2.0	2.1	4.15	45	1,100°F	18-25
	1.65	3.75	42	1,100°F	
	1.80		40	1,100°F	
	1.75	2.00	40	1,100°F	
	1.05		40	1,100°F	
	1.00	2.35	40	1,100°F	
	1.00	1.00	10	1,100°F	
	1.05	1.05	10	1,100°F	
	1.75	1.75	10	1,100°F	
	1.80	1.80	10	1,100°F	
	1.05	1.05	10	1,100°F	
0.0	2.10	2.10	15	1,100°F	10-12
0.0	2.10	2.10	22++	1,100°F	15-18

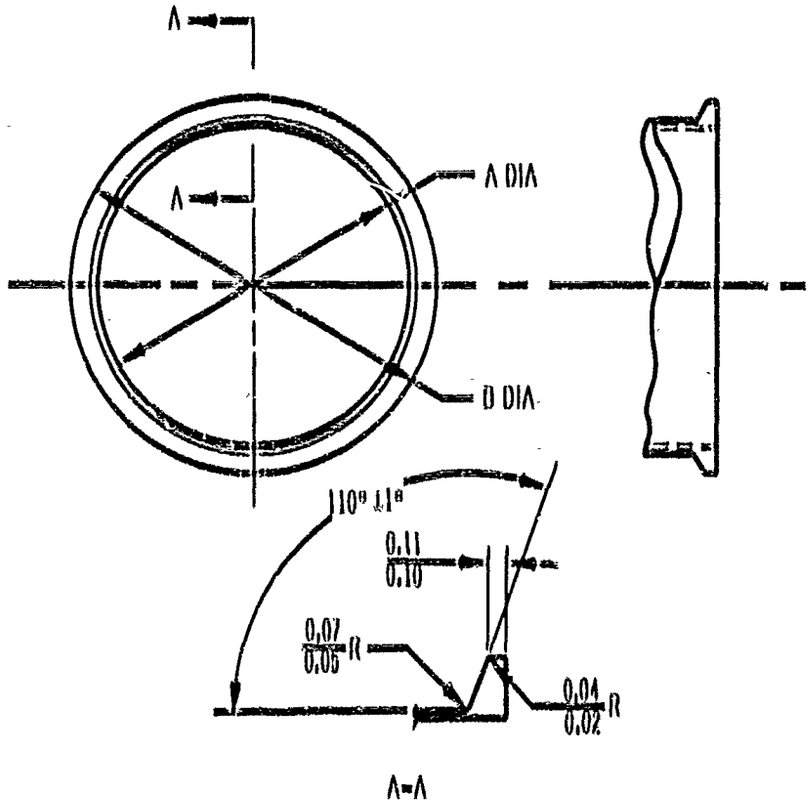

ENGINE BLEED PORT	DUCT O.D.	A DIA $^{+0.005}_{-0.000}$	D DIA ±0.001
ENVIRONMENTAL CONTROL SYSTEM	6.00	6.03	6.69
INLET ANTI-ICE	4.00	4.03	4.69

Figure 6. Bleed Air Port Configuration

6.2.6.1.3 Dynamic Loading
The drive pad shall be designed to withstand the impact load incurred when a static gearbox is connected to the pad with the engine windmilling at 1.6 percent rpm. The estimated ADS equivalent polar moment of inertia, at the PTO pad, is 40 lb-ft². The estimated torsional spring rate of the ADS shaft is 866,000 in. lb per radian.

6.2.6.1.4 Power Takeoff Shaft Rotation
Shaft speed shall be 6,000 ±200 rpm with the engine rotor at 100 percent rated rpm. Direction of shaft rotation shall be clockwise when viewing the engine PTO pad.

5.2.3.1.5 Shear Section
Any shear section provided by GE shall be designed to shear at a torque of not less than 5,200 ft - lb.

5.2.3.1.6 Mounting Flange and PTO Shaft Loads
The gear box and accessories will be supported from the aircraft structure. However, the pad will be subjected to and shall be designed for an overhung moment of 1,000 in. lb incurred through angular and axial deflection of external shaft.

5.2.3.1.7 Lubrication
The engine spline shall be lubricated by the engine lubrication system.

5.2.3.2 Mass Moment of Inertia of Rotating Parts
The effective mass moment of inertia of the compressor turbine unit about its axis is 4,080 lb-ft^2.

The effective mass moment of inertia of the masses to be driven through the accessory power takeoff during engine starting is 2,000 lb - ft^2 based on a pad-rotor gear ratio of $\frac{5,200}{5,200}$ = 1.

5.2.4 Engine Mounting
Mounting provisions shall be provided to support the engine and inlet as defined in Fig. 7. Mounting point locations shall be shown on the Installation Drawing. Allowable loads are given in Ref. Par. 5.2.15.

5.2.4.1 Design Load Factors
The engine and its mounting points shall be designed for ultimate load factors not less than the following for the propulsion pod. The engine and its supports shall withstand 2/3 of the ultimate design loads as shown in Table VI without permanent deformation.

5.2.4.2 Supersonic Inlet Provisions
The engine compressor case shall provide 8 point support for an interchangeable supersonic inlet. The flanged inlet-engine joint shall form a solid pressure tight seal.

5.2.4.2.1 Forward Compressor Flange Design Loads
The ultimate design loads for the engine forward flange f[illegible]d in Fig. 9. The flange shall withstand the specified loads without fail. [illegible]/3 the specified loads without permanent deformation.

5.2.5 Ground Handling Attachments
Mounting provisions shall be provided on the engine for support of the engine on ground equipment or for attachment of hoisting equipment. These attach points shall be readily accessible without removal of any engine components. The location and dimensions shall be as shown on the Installation Drawing.

The ground support attachments shall be designed for an ultimate load of at least 5.0 times the weight of the complete engine pod. These support points shall be independent of the normal flight support points. They shall be usable with the flight support links installed.

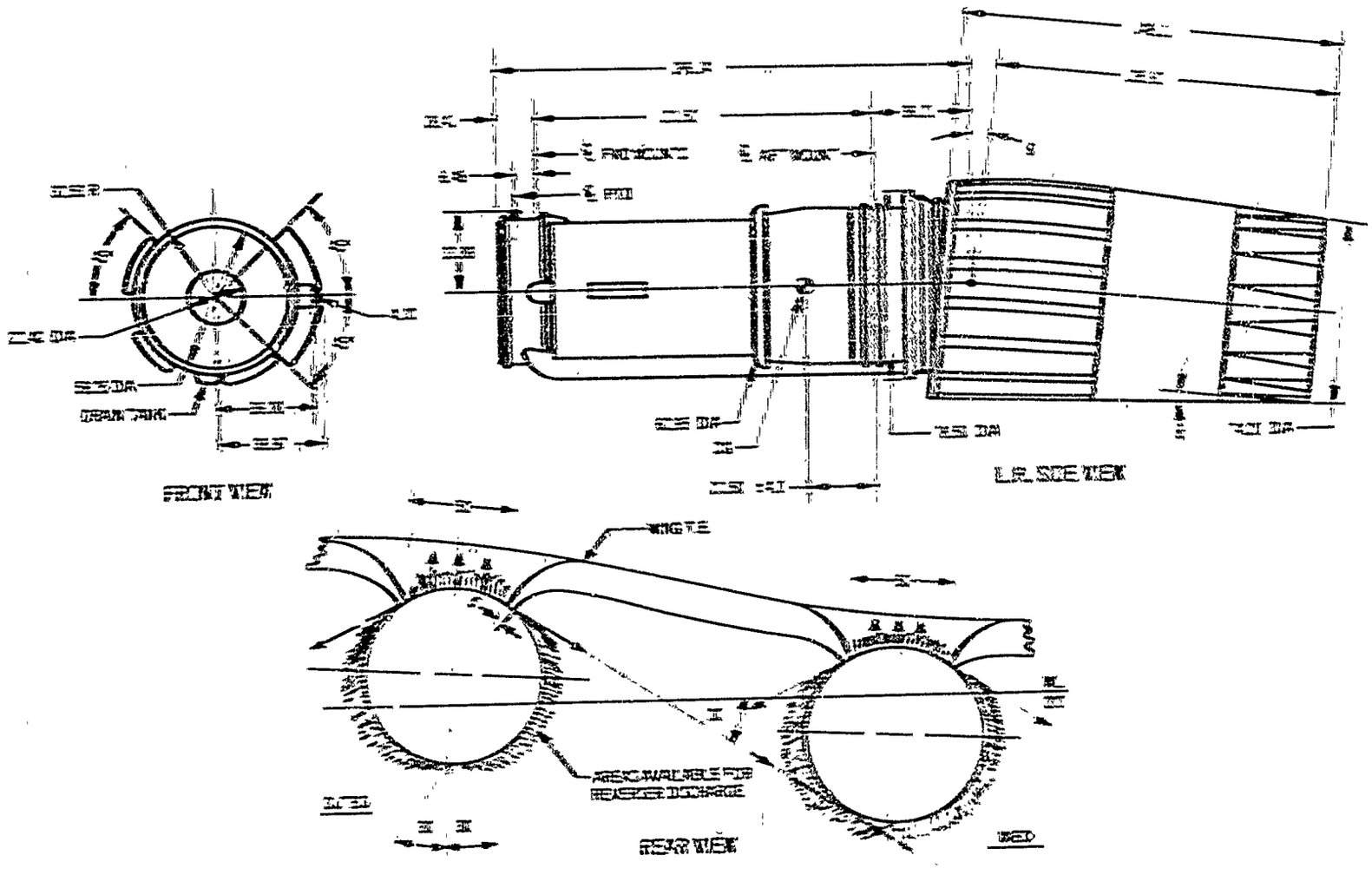

Figure 7. Engine Configuration

Table VI. Design Load Factors

Condition	
1	0.0 V = Landing
2	−1.0 V = Landing
3	0.0 V + 1.5 T_M = Supersonic maneuver
4	−1.0 V + 1.5 T_M = Supersonic maneuver
5	3.0 T_M + 3.0 V = Fatigue
6	3.0 T_M = Fatigue
7	+2.5 S = Maneuver
8	−2.5 S = Maneuver
9	M_y + 1.5 V + 1.5 T_M = Gyroscopic
10	−M_y + 1.5 V + 1.5 T_M = Gyroscopic
11	M_p + 0.75 V + 1.5 T_M = Gyroscopic
12	−M_p + 0.75 V + 1.5 T_M = Gyroscopic
13	Aero (S) + 1.5 T_M = Supersonic maneuver
14	1.5 T_M = Aero (S) = Supersonic maneuver
15	Aero (T) + 1.5 T_M = Transonic maneuver
16	1.5 T_M = Aero (T) = Transonic maneuver
17	0.9 D = Wheels-up landing
18	−0.0 D = Ditching
19	+3.0 T_R + 3.0 V = Reverse thrust
20	M_R = Engine seizure

V - Wt of propulsion pod acting vertically

S - Wt of propulsion pod acting laterally

D - Wt of propulsion pod acting forward

T_M Maximum engine thrust

Table VI. Concluded

T_R	Maximum engine reverse thrust (0.60 max. dry thrust)
M_y	Gyroscopic yawing moment (due to airplane pitch rate of 2.25 rad/sec. ▷
M_p	Gyroscopic pitching moment (due to airplane yaw rate of 0.00 rad/sec. ▷
M_R	Roll moment due to engine seizure (See Fig. 8 for Magnitude)
Aero (S)	Total aerodynamic load acting on propulsion pod (Supersonic) (See Fig. 8 for magnitude)
Aero (T)	Total aerodynamic load acting on propulsion pod (Transonic) (See Fig. 8 for magnitude)

NOTE: Weight of the propulsion pod is equal to the basic engine +3,800 lb.

▷ = 1 rad/sec max. operational value ▷

▷ = 0.5 rad/sec max. operational value

▷ The engine will continue to operate (at reduced performance if the engine is not at a stabilized RPM) after exposure to this condition.

3.2.0 Engine Aircraft Accessory Provisions

3.2.6.1 Inlet Hydraulic Pumps
Two drive pads in accordance with Ref. 2.2.1 shall be provided on the engine for mounting hydraulic pumps. The maximum drive speed shall be 5,200 rpm (including the projected maximum engine growth). The minimum torque required is 1,100 in. lb. Pad locations are defined in Fig. 10. Each pad shall deliver 80 hp at 5,000 rpm for 5 percent of the time. The total continuous output for both pads shall be 85 hp. Drive data shall be shown on the Installation Drawing. The pump outline is shown in Fig. 11.

3.2.6.1.1 Spline Lubrication
The spline shall be lubricated per Par. 3.2.10.2.

3.2.6.2 Tachometer Generator
A tachometer generator shall be provided by GE.

3.2.7 Engine Exhaust and Reverser
The engine shall be furnished with an exhaust system including forward thrust nozzle system and thrust reverser.

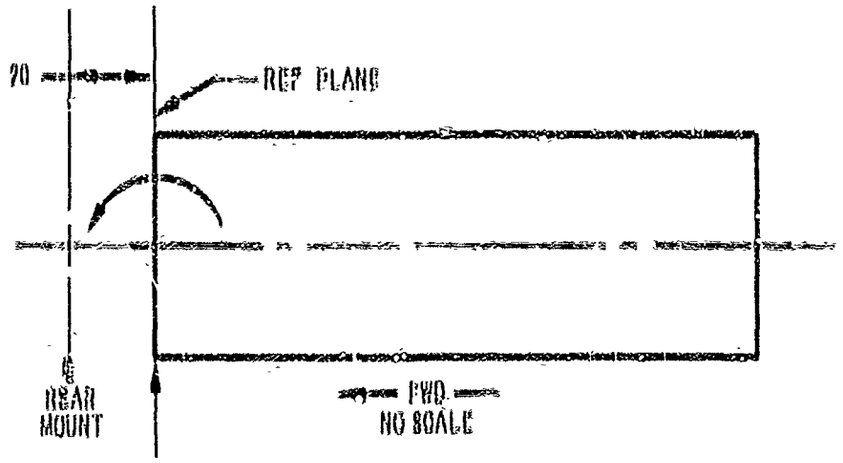

PART	LOAD DESCRIPTION	MAGNITUDE
EXH SYS	SHEAR DUE TO AERODYNAMIC SIDELOAD	7.0 KIP
EXH SYS	BENDING DUE TO AERODYNAMIC SIDELOAD	280 IN-KIP
EXH SYS	SHEAR DUE TO AERODYNAMIC VERT LOAD	4.2 KIP
EXH SYS	BENDING DUE TO AERODYNAMIC VERT LOAD	192 IN-KIP

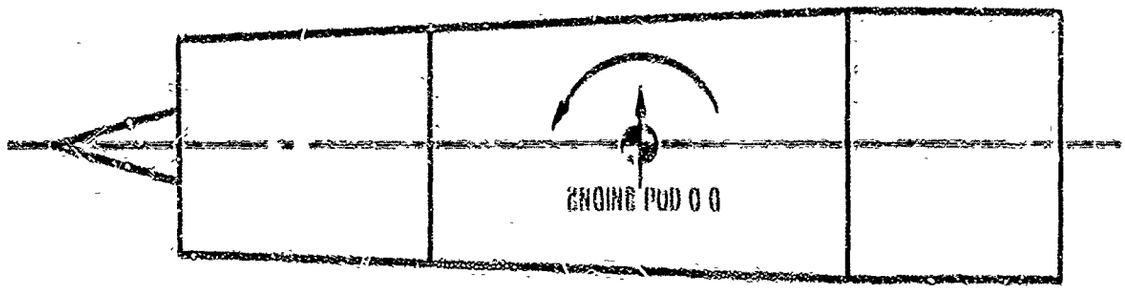

NO SCALE

RESULTANT LOAD ACTING AT ENGINE POD C G	MAGNITUDE
AERODYNAMIC SIDELOAD ON ENTIRE POD	34.6 KIP
MOMENT DUE TO AERO. SIDELOAD ON ENTIRE POD	2660 IN-KIP
AERODYNAMIC VERTICAL LOAD ON ENTIRE POD	23.0 KIP
MOMENT DUE TO AERO. VERTICAL LOAD ON ENTIRE POD	2440 IN-KIP
ROLL MOMENT DUE TO ENGINE SEIZURE	3370 IN-KIP

Figure 8. Engine Mounting System Loading

06A1919R-1

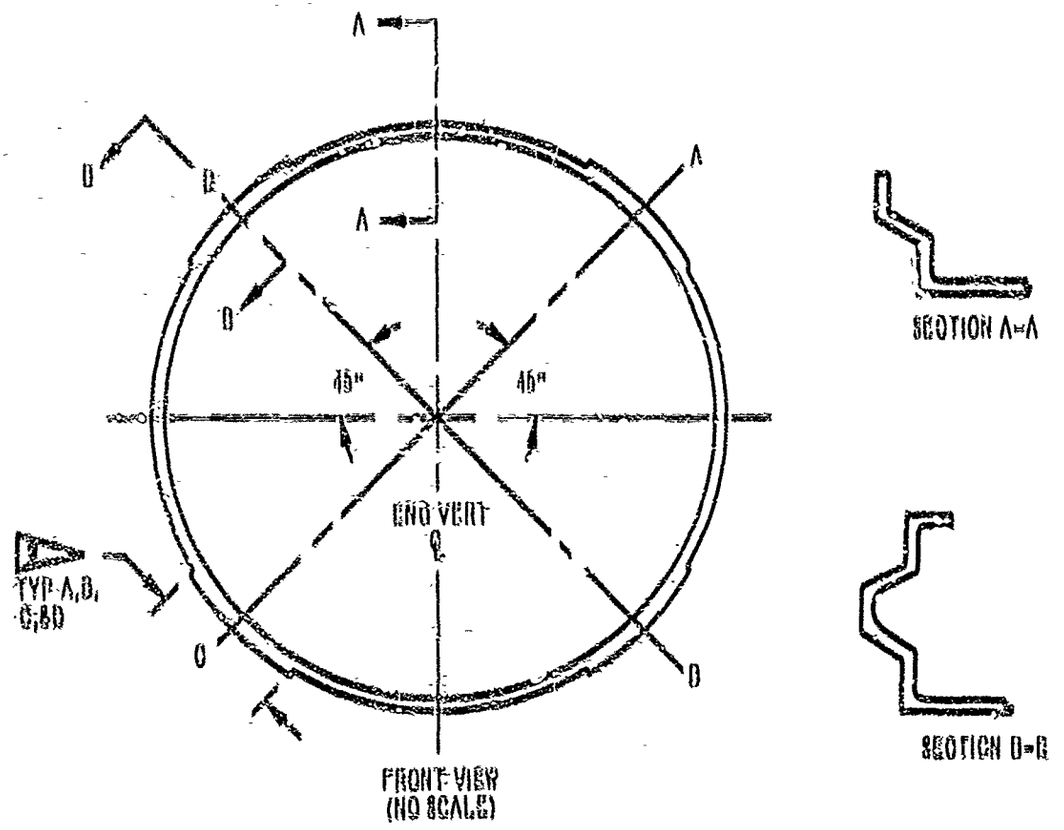

SUPERSONIC INLET LOADS	MAGNITUDE
AXIAL THRUST DUE TO EXPULSION LOADS	62.1 KIP
SHEAR DUE TO AERODYNAMIC SIDELOAD	23.2 KIP
BENDING DUE TO AERODYNAMIC SIDELOAD	2100 IN-KIP
SHEAR DUE TO AERODYNAMIC VERT. LOAD	16.5 KIP
BENDING DUE TO AERODYNAMIC VERT. LOAD	1400 IN-KIP

REACTED AT POINTS A,B,C, AND D ONLY

LOAD CONCENTRATIONS AT NOTED POINTS MAY BE DISTRIBUTED OVER 2 BOLTS

Figure 9. Compressor Front Flange Loading

D6A10190-1

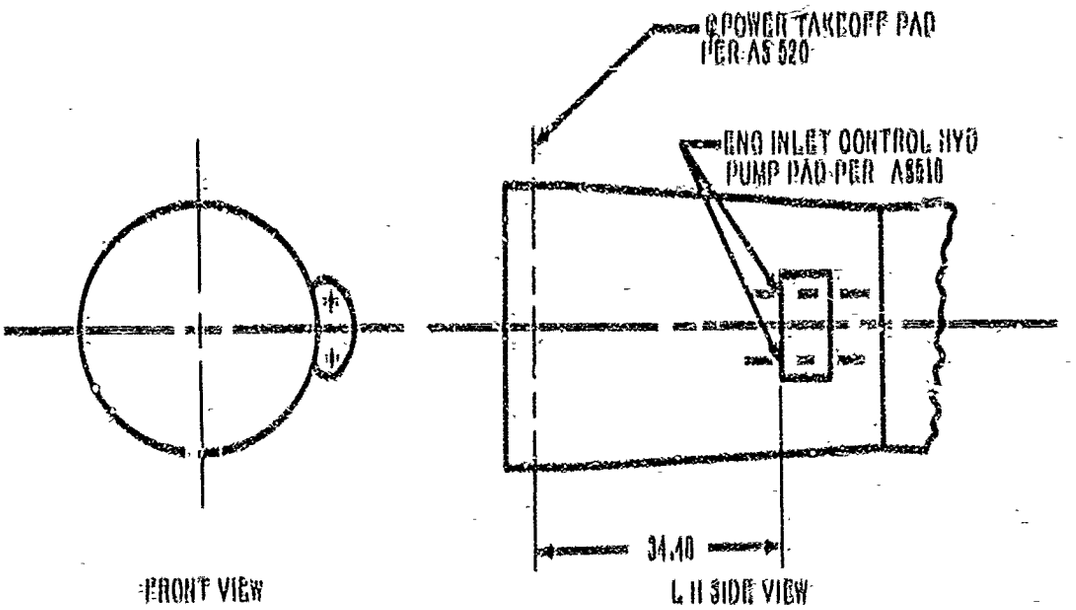

Figure 10. Power Takeoff Pad Configuration

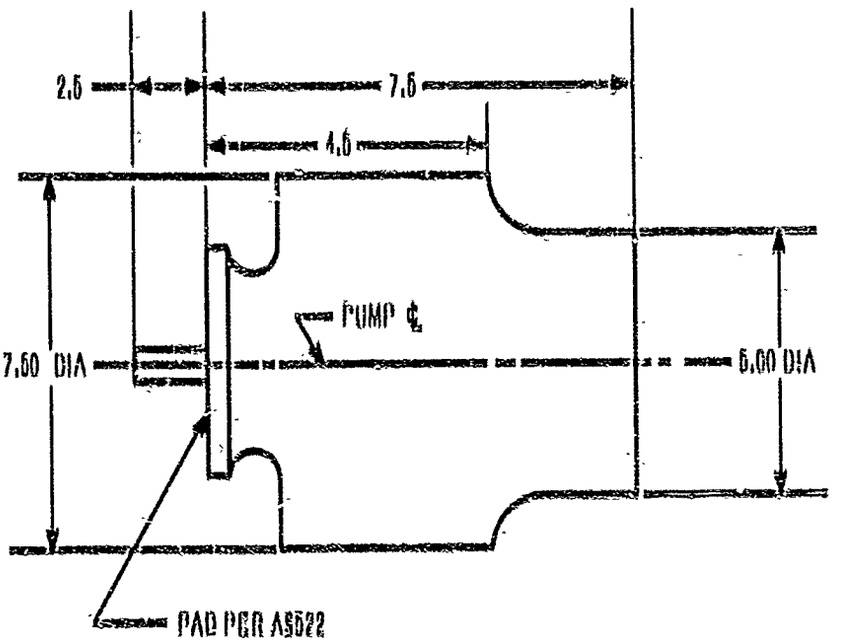

Figure 11. Hydraulic Pump Envelope

3.2.7.1 Two Stage Ejector Exhaust Nozzle
The exhaust nozzle system shall include a variable area two stage ejector nozzle complete with required actuators and linkages. Air inlet doors are supplied with the nozzle to admit additional ejector air.

Nozzle performance definitions are as follows:

a. Internal Performance

$$Cfg = \frac{\text{(Primary + Secondary) Measured Gross Thrust}}{\text{Ideal Primary Thrust}}$$

$$Cfg_{eq} = Cfg = \frac{\text{Secondary Flow Induction Drag}}{\text{Ideal Primary Thrust}}$$

b. Installed Performance

$$Cfg_{eq,\ inst} = Cfg_{eq} = \frac{\text{Boattail \& Inlet Drag + Induction Losses for } W_{s2}}{\text{Ideal Primary Thrust}}$$

$$= \frac{F_{gp} + F_{gs} - F_{rams} - (F_{D_r} D_i D_\beta D_{ws2})}{F_{ip}}$$

c. Nozzle Definitions (See Fig. 12)

Cfg	=	Nozzle Thrust Coefficient
Cfg_{eq}	=	Equivalent Nozzle Thrust Coefficient
F_{D_β}	=	Boattail drag
F_{D_i}	=	Inlet drag
F_{D_r}	=	Ramp drag
$F_{D_{ws2}}$	=	Second stage ram drag
F_{gp}	=	Primary gross thrust
F_{gs}	=	Secondary gross thrust
F_{rams}	=	Secondary ram drag
F_{ip}	=	Primary ideal thrust
W_p	=	Primary airflow
W_{s1}	=	Secondary airflow which includes leakage
W_{s2}	=	Second stage airflow

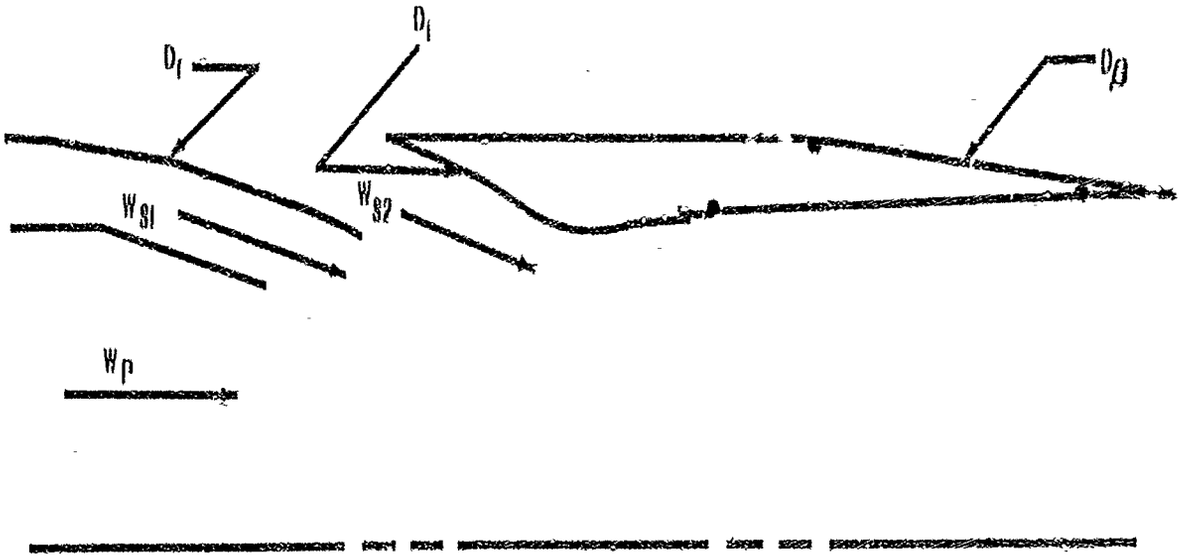

INTERNAL PERFORMANCE

$$Cfg = \frac{\text{(PRIMARY + SECONDARY) MEASURED GROSS THRUST}}{\text{IDEAL PRIMARY THRUST}}$$

$$Cfg_{eq} = Cfg - \frac{\text{SECONDARY FLOW INDUCTION DRAG}}{\text{IDEAL PRIMARY THRUST}}$$

INSTALLED PERFORMANCE

$$Cfg_{eq,\,inst} - Cfg_{eq} - \frac{\text{BOATTAIL \& INLET DRAG + INDUCTION LOSSES FOR } W_{S2}}{\text{IDEAL PRIMARY THRUST}}$$

$$= \frac{F_{gp} + F_{gs} - F_{rams} - (F_{D_f}, D_i, D_\beta, D_{WS2})}{F_{ip}}$$

Figure 12. Exhaust Nozzle Thrust and Drag

The schedule of boattail angle at installed flight conditions shall be coordinated with and approved by Boeing.

0.2.7.2 Reverse Thrust
The engine shall be capable of satisfactory operation on a standard sea level day, with the reverser in either the forward thrust position, or full reverse position.

The net effective reverse thrust shall be in accordance with Table I. The reverse gas flow pattern shall be in accordance with Fig. 7. The thrust reverser operation shall be controlled by the basic engine power control system. The thrust reverser shall incorporate a position indicating transducer or switch.

0.2.7.2.1 Reversing Time
The time required to change the engine power setting from maximum day forward thrust to maximum reverse thrust is specified in Par. 0.2.10.6.

0.2.7.2.2 Reverser Safety Interlock
The reverser shall incorporate a safety interlock with the power control such that:

a. Power cannot be increased in the forward thrust lever regime, unless the reverser is in the forward thrust position.

b. Power cannot be increased above 85 percent rpm in the reverse thrust lever regime, unless the reverser is in the full reverse position.

c. In the event that, at any power condition, the reverser should depart from the forward thrust position dictated by the thrust lever position, the engine power shall be reduced to idle.

0.2.7.3 Measurement of Exhaust Gas Temperature
The engine shall be equipped with the thermocouple probes for measurement of turbine exhaust gas temperature. The thermocouples shall permit consistent measurement of average exhaust gas temperature.

0.2.7.4 Exhaust System Mounting Flange Loads
The ultimate aero design loads for the engine aft flange are defined in Fig. 8.

The flange shall withstand the specified loads without failure and 2/3 the specified loads without permanent deformation.

0.2.7.5 Aft Cowl Seal
Boeing will assume responsibility for development of the air seal at the interface between the Boeing-furnished cowl panels and the GE-furnished aft cowl. The leakage through all cowl joints will not exceed 0.5 lb/min. Boeing will assume responsibility for provision of inlets and seals between nacelle doors and accessory capsule.

8.2.8 Engine Control Systems
The engine control systems shall include all control units required for proper and complete control of the engine.

8.2.8.1 Thrust Modulation
The relationship between engine thrust and thrust lever position shall be free of abrupt changes except as it is affected by augmentation, engine bleed, and normal and ground idle throttle position. The variation of rpm versus arc of travel shall be per Fig. 13.

8.2.8.2 Starting Procedure
The normal starting procedure shall be simple and shall not require excessive pilot skills. With the power control in the idle position and energizing the ground start switch, advancement of the fuel shutoff control shall provide for ground and air starting and satisfactory acceleration to stabilize idle operating conditions.

8.2.8.3 Power Control
A single, separate control shall be provided on the engine to modulate thrust throughout the entire schedule defined by Fig. 13. The attachment for the airframe control system shall include a male spline with missing tooth indexing. The total angular travel of the power control at the external attachment point shall not exceed 120 deg.

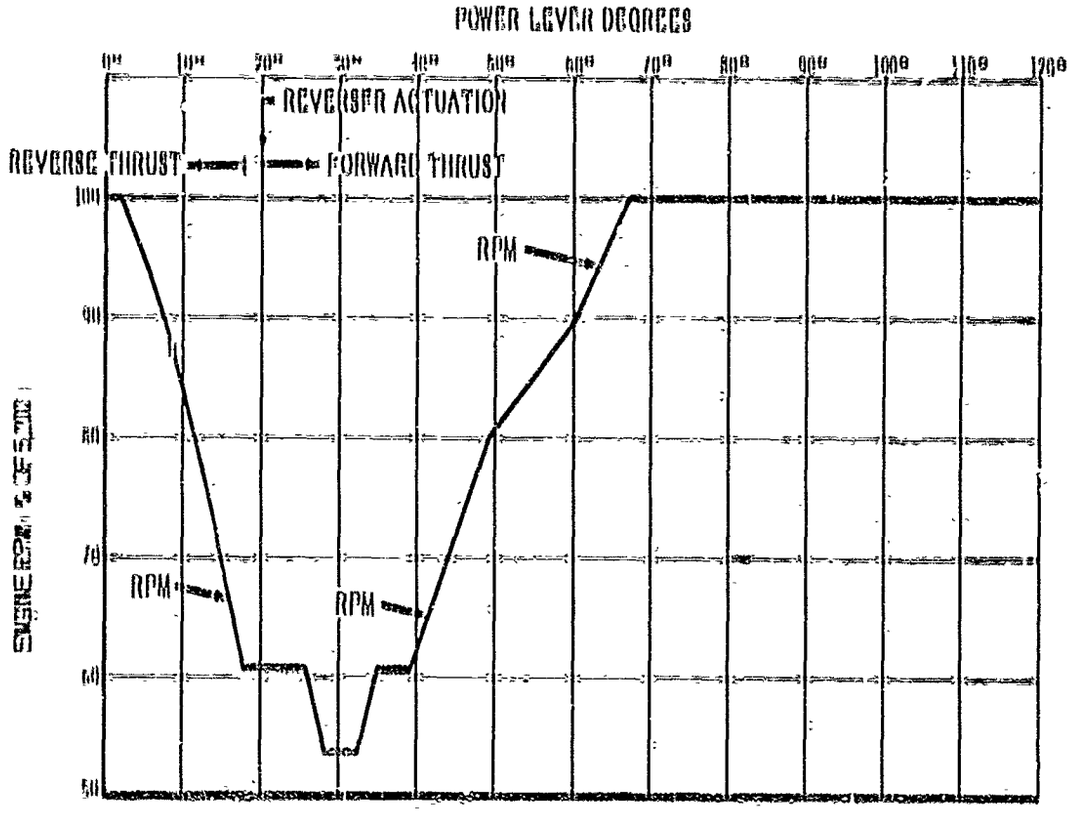

Figure 13. Throttle Schedule

The power control shall contain features that preclude any thrust lever creep in either the direction of increased or decreased engine rpm. Neither the control system or throttle shall be self-energizing in any direction.

The power control system shall be provided with a rig pin or equivalent to locate the engine components at the idle position and at the partial power position (90 percent max. dry thrust). In addition to the rigging stops, a protractor or scale and pointer shall be provided to indicate the angle of movement and the major thrust settings.

The power control system shall incorporate provisions for a rigging pin or other positive means of rigging engine furnished linkages.

6.2.6.6.1 Selector Valve
A single lever shall be provided to control the fuel shutoff, fuel recirculation, windmill brake, and turbine cooling conservation as follows:

Position		Arc of Travel
	Stop	0° - 8°
a. Windmill brake	- Windmill brake applied. Fuel shutoff. Fuel recirculation	8° - 17°
b. Shutdown	- Fuel shutoff. Fuel recirculation	27° - 60°
c. Descent	- Permit required fuel flow and recirculation for cooling. ▷	57° - 60°
d. Run	- Permit required fuel flow.	87° - 99°
e. Cruise and loiter	- Permits turbine cooling air conservation by shutting off compressor air used to cool turbine rotor.	117° - 120°
	Stop	120° - 102°

▷ See Par. 6.2.6.2b for recirculation limits.

The control shall incorporate provision for a rigging pin or other positive means for indexing the lever at the 60 deg position. In addition to the rigging stops, a protractor or scale and pointer shall be provided on the selector valve shaft to indicate the angle of movement and the major mode settings.

6.2.6.6.2 Engine Controls Maximum Operating Torques
The maximum torque required to operate the engine power control throughout its range of travel shall not exceed 15 in. lb measured at the control's external attachment point. The maximum torque required to operate the engine selector valve throughout its range of travel shall not exceed 25 in. lb measured at the control's external attachment point.

The torque values noted above shall apply throughout the engine starting and operating temperature range.

3.2.6.6.3 Engine Control System Design Loads
In the power control system, the engine power control shaft and the engine supplied linkage for the power control system shall neither bind nor take permanent deformation when a torque load of 900 in. lb and a bending moment of 250 in. lb is applied at the airframe attachment. The engine power control shaft and engine supplied linkage shall be designed to withstand 1.5 times the above loads without failure. However, the selector valve shaft shall neither bind or take permanent deformation when a maximum torque load of 450 in. lb and a bending moment of 250 in. lb is applied at the airframe attachment. The shaft shall be designed to carry 1.5 times the above loads without failure.

3.2.6.4 Control System Adjustments
External adjustments to the controls shall be limited to adjustments which can be made correctly with the engine assembled and with reference only to the operating characteristics of the engine on the ground. The external adjustments shall include the following:

a. Maximum speed

b. Idle speed

c. Exhaust gas temperature

d. Fuel specific gravity

3.2.9 Engine Fuel System

3.2.9.1 Fuel System Design Pressure
The engine fuel system shall not be damaged by a sustained fuel pressure of 170 psig applied to the inlet connection with the engine shut down. The engine fuel shutoff valve can be in either the closed or open position.

3.2.9.2 Performance with Assistance from Airplane Boost Pump
The engine fuel system shall supply the required amount of fuel at the required pressures for satisfactory operation of the engine throughout its complete operating range including starting and augmentation with the following conditions at the fuel inlet connection on the engine:

a. Minimum fuel temperature of -50°F or a viscosity of 12 centistokes whichever occurs first.

b. Fuel pressure — from true vapor pressure of the fuel plus 5 psi to 50 psig with a vapor liquid (V/L) ratio of zero.

3.2.3.3 Performance with no Assistance from Airplane Boost Pump
For emergency operation, the engine shall operate properly for time periods and conditions listed below:

True Vapor Pressure of the Fuel 0.25 psi Maximum at 140°F. Ambient Air Temperature at Standard Day Conditions.

Condition	Power	Altitude (ft)	Mach No.	Time (hr)	Fuel Pressure at Inlet Connection (psia)
1	Maximum Augmented	0-8,000	0 to 0.8	0.08	4.05 below ambient
2	Maximum	0-15,000	0.45 at S.L.	0.08	0.75 below ambient
	Dry		0.60 at 15,000		
3	Part Power	30,150	0.8	4.00	1.0 below ambient
4	Idle	0-70,000	0-2.7	0.50	0.20 below ambient

The engine fuel system shall be capable of priming itself and starting within five minutes after fuel runout when subjected to the following conditions:

a. Dry lift of 2 ft.

b. 20,000 ft fuel tank altitude.

c. 140°F fuel temperature.

d. A dry line volume of 14 U.S. Gal. maximum between the fuel pump inlet and the fuel pump supply.

e. Fuel per Par. 3.1.4 with a maximum of 0.25 psi tvp.

f. Engine speed above 40 percent rpm.

3.2.3.4 Ground Starting and Idle
The engine fuel system shall supply the required amount of fuel at the required pressure for satisfactory operation for ground starting and idle with 110°F fuel at the engine inlet connection at 0.20 psi below ambient pressure.

8.2.0.5 Fuel Contamination
The engine shall function satisfactorily when using fuel contaminated to the extent specified in Ref. 2.1.11.

8.2.0.6 Fuel Filters
If a filter(s) is required, it shall be a part of the engine, and shall be of sufficient capacity to permit a cumulative fuel flow equivalent to a minimum of 10 hrs. of engine operation at 100,000 pph fuel flow with fuel contamination as specified in Ref. 2.1.11 without being cleaned. Main flow filters shall be provided with an integral bypass for attaching instrumentation to determine when the filter is clogged or is bypassed.

A drain plug with locking provisions shall be installed to permit complete drainage of the filter case.

8.2.0.7 Fuel System Icing
If analysis shows that the fuel temperature at the engine inlet is less than 32°F for periods greater than 5 min, then auxiliary heating will be required. Provisions for such heating will be negotiated.

8.2.0.8 Fuel Flowmeter
Provisions shall be made for installing a Boeing-furnished fuel flowmeter(s) in an ice free section of the engine fuel system where the total engine fuel flow can be measured.

8.2.0.9 Fuel Temperature Sensors
Provisions shall also be made for installing Boeing-furnished temperature sensors at the engine fuel inlet connection. The engine will provide a temperature sensor for measuring fuel temperature at the furthermost fuel nozzle.

8.2.0.10 Fuel Resistance
The materials and designs used in engine and components shall be satisfactory when tested with Ref. 2.1.10 test fluids, Types I and III, when used in any sequence.

8.2.0.11 Salt Water Resistance
The functioning of the engine fuel system shall not be adversely affected by the presence of salt water in the fuel to the extent specified in Ref. 2.1.11.

8.2.0.12 Fuel Recirculation
The recirculation system shall remain effective throughout the descent with the selector lever in the descent position and the power lever at idle. At power settings above approximately 15 percent of maximum nonaugmented thrust, recirculation will automatically cut off. Although the engine system is currently designed to operate by positioning of the selector lever, if future aircraft route planning indicates that an automatic temperature sensing system is necessary, the design of such will be negotiated.

8.2.10 Engine Lubricating System

8.2.10.1 Lubricating System
The lubricating system shall use engine oil per Ref. 3.2.5 and shall adequately lubricate the engine throughout its operating range. The complete oil system shall be engine mounted, including oil reservoir and fuel oil coolers, and shall be furnished as component parts of the engine lubricating system. The fuel oil coolers shall be adequate to meet the complete and total engine oil cooling requirement throughout the operating range of the engine.

8.2.10.2 Drive Spline Lubrication
All spline surfaces on the engine which are capable of transmitting more than 0.5 hp shall be pressure lubricated by the main engine lubricating system except for the lube and scavenge pump which is wetted by circulated oil.

8.2.10.3 Oil Quantity
The oil reservoir shall contain usable oil sufficient for a minimum of 10 hr of engine operation at the maximum allowable consumption rate given in Par. 8.2.10.3.1. The reservoir shall be provided with a 4 bolt flange per the installation drawing for installation of a transmitter for a remote indicating oil quantity system. The reservoir shall be of fireproof construction.

8.2.10.3.1 Oil Consumption
The engine oil consumption shall not exceed 2.0 lb per hour. This maximum value applies to the engine thrust range from idle to maximum continuous thrust.

8.2.10.4 Oil Filling
The basic engine shall be furnished with a pressure fill system and gravity fill port with a dipstick for checking oil level. The fill ports shall be in accordance with Par. 8.1.14.1.

8.2.10.5 Oil Pressure
Provisions shall be made for installing 2 Boeing-furnished oil pressure transmitters, one of which will be designed to indicate system pressure and the other to measure the pressure drop across the oil filter.

8.2.10.6 Oil Temperature
Provisions shall be made for installing a Boeing-furnished oil temperature transmitter.

8.2.10.7 Oil Filter
The basic engine shall be furnished with an oil filter incorporating an integral bypass. The filter shall have provisions for attaching instrumentation to determine when the filter is clogged or bypassed in accordance with Par. 8.2.10.5.

3.2.11 Engine Drain System

3.2.11.1 Leakage and Drains
There shall be no liquid leakage from any part of the engine except at drains provided for this purpose. Provisions shall be made for automatically clearing the combustion areas of combustible fluids after each false start and for preventing excessive amounts of combustible fluids from entering the combustion areas after shutdown, within the engine attitude envelope shown in Fig. 5. Provisions shall also be made for clearing all vent areas and other pockets or compartments where combustible fluids may collect during or subsequent to operation of the engine. The drain system shall be part of the basic engine.

3.2.11.2 Drain Tank
A drain tank shall be provided on the engine to collect leakage from engine accessory pad drains and to collect the fuel discharged from the fuel manifold and combustion chamber during start or shutdown. The tank shall have a minimum capacity for one normal shutdown and 2 false starts. Ports per AND 10050 shall be provided for both overflow and vent connections. The shape and location of the tank and size and location of the ports shall be coordinated with Boeing. The tank shall be of fireproof construction.

3.2.11.3 Drain Ejector
An ejector shall be incorporated into the engine to discharge the contents of the drain tank into the engine exhaust system. A port shall be provided on the engine for connection of an emergency cowl drain-line into the ejector system.

3.2.12 Engine Electrical System

3.2.12.1 External Electrical Power
The external electrical power requirements shall not exceed:

a.	Ignition	7 amps maximum 115 volts, ac 400 Hz, single phase
b.	Anti-Icing Valve Actuation	5-1/2 amps 115 volts, ac 400 Hz, single phase

3.2.12.2 Ignition System
The engine ignition system shall be defined on the installation drawing per the requirements established in the engine-model specification, Refs. 2.2.16 and 2.2.14.

3.2.12.3 Ignition Proof
All external electrical components shall be explosion proof to prevent ignition of any explosive mixture surrounding the component.

8.2.12.4 Connectors and Cable
With the engine stabilized at a temperature of -50°F, it shall be possible to connect or disconnect electrical connectors and to flex electrical conductors, as necessary for routine maintenance, without damage to these items.

8.2.12.5 Emergency Electrical Power
In the event of loss of external power while in operation, the engine shall be electrically self-sufficient. At all engine speeds at or above idle, the engine shall continue to operate safely. Supersonic inlet anti-icing, ignition and other systems not critical for operation may be inoperative.

8.2.12.6 Electrical and Electronic Interference
No electrical or electronic components shall cause interference beyond the limits specified in Figs. 14 through 17. The components shall not be susceptible to interference generated by other electrical and electronic sources within the limits specified in Table VII.

Table VII. Electrical Interference Limits

Antenna	Frequency Range	Voltage(5)
Conducted Interference	(rf) 0.15 to 1,000 MHz (1) (3)	0.1
	(af) 50 to 15,000 Hz (2)	8.0
Radiated Interference	(4) 41" rod 0.10 to 25 MHz (3)	0.1
	25 MHz dipole 25 to 85 MHz (3)	0.1
	tuned dipole 85 to 1,000 MHz (3)	0.1

NOTES: (1) Applicable only to ungrounded line voltage power input points.

(2) Applicable only to ungrounded dc line voltage p[illegible] input points.

(3) Modulated 50 percent at 400 to 1,000 cycles or any special form of modulation to which the equipment is vulnerable

(4) Antenna placed 1 ft from electrical or electronic components.

(5) Value of open-circuit voltage from 50-ohm source impedance.

8.2.12.7 Short Duration Interference
The limits of Figs. 15 and 17 are intended to apply at all times to electrical or electronic items capable of generating broad band electro-magnetic interference. However, if GE considers a deviation is necessary or desirable for relative short duration, infrequent, interference levels, (for example, once per flight) documented evidence shall be submitted to Boeing to support such a request.

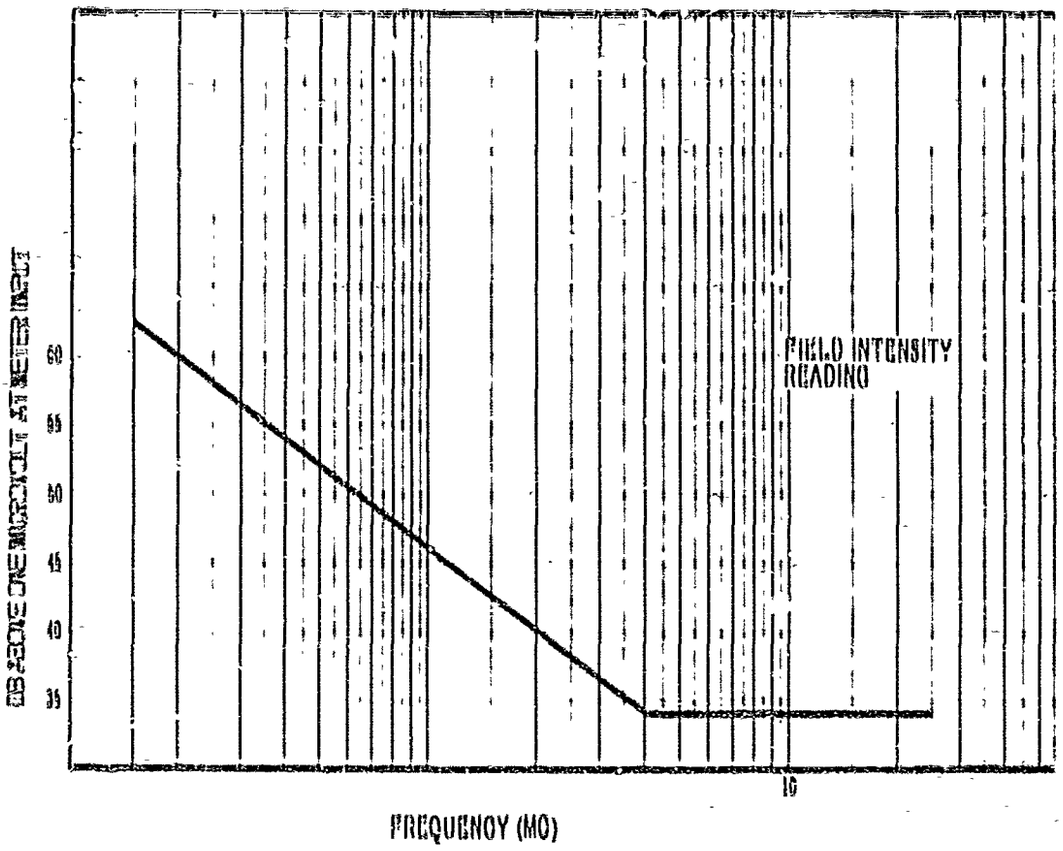

Figure 14. Narrow Band (CW) Conducted Interference Limits Using Stabilization Network

Documentation should be specific as to the time of occurrence and duration of deviations from the levels of Figs. 16 and 17 as well as their magnitude.

Boeing evaluation of the technical evidence submitted will not permit deviations over 20 db above the limits of Figs. 16 and 17 for short duration interference.

3.2.10 Engine Anti-Icing
The engine shall operate satisfactorily under the icing conditions specified in Refs. 2.1.6 and 2.1.9. Whichever requirement is the more severe will be the design criteria.

3.2.10.1 Type of Engine Anti-Icing
The anti-icing system operation will be accomplished by manual actuation of a switch on the flight deck that will activate the anti-icing shutoff valve mounted on the engine. A flow sensor shall be provided by GE to be connected to an indicator light on the flight deck to indicate system "on." A boss shall be provided by GE in the anti-icing duct for installation of a Boeing-furnished temperature sensor.

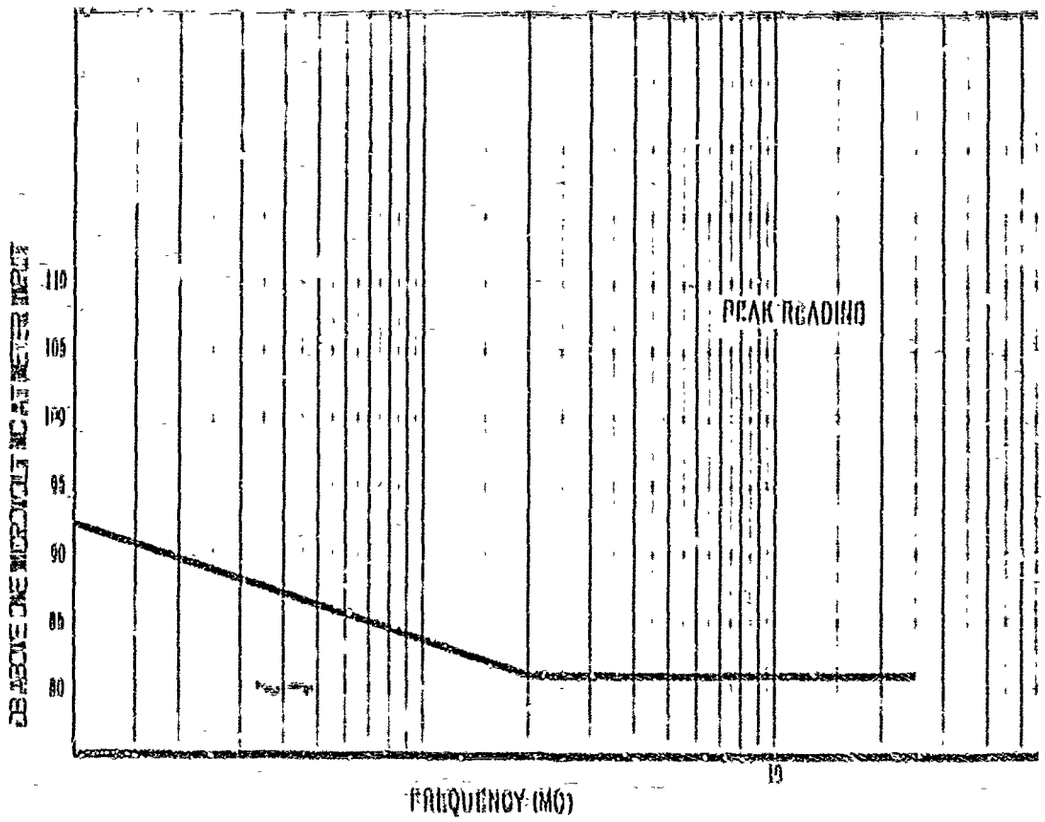

Figure 15. Broad Band and Pulsed (CW) Conducted Interference Limits Using Stabilization Network

3.2.14 Engine Heat Rejection and Cooling
The engine shall be capable of continuous operation at the ambient conditions shown in Fig. 1 at the maximum augmentation for the Mach numbers and altitudes shown on Fig. 8.

Any secondary air system required for nozzle, engine case, and/or compartment cooling shall be the responsibility of GE and shall be supplied as part of the basic engine assembly, except provisions for an auxiliary secondary air door and nacelle pressure relief if required shall be furnished by Boeing.

3.2.14.1 Secondary Air Control Valve
A valve(s) shall be provided to control the flow of secondary air. A transmitter shall be provided to remotely indicate the position of the secondary air valve(s).

3.2.15 Engine Instrumentation
The following minimum instrumentation is required for airplane operation:

a. Tachometer generator (see Par. 3.2.6.2)

b. Exhaust gas temperature (see Par. 3.2.7.3)

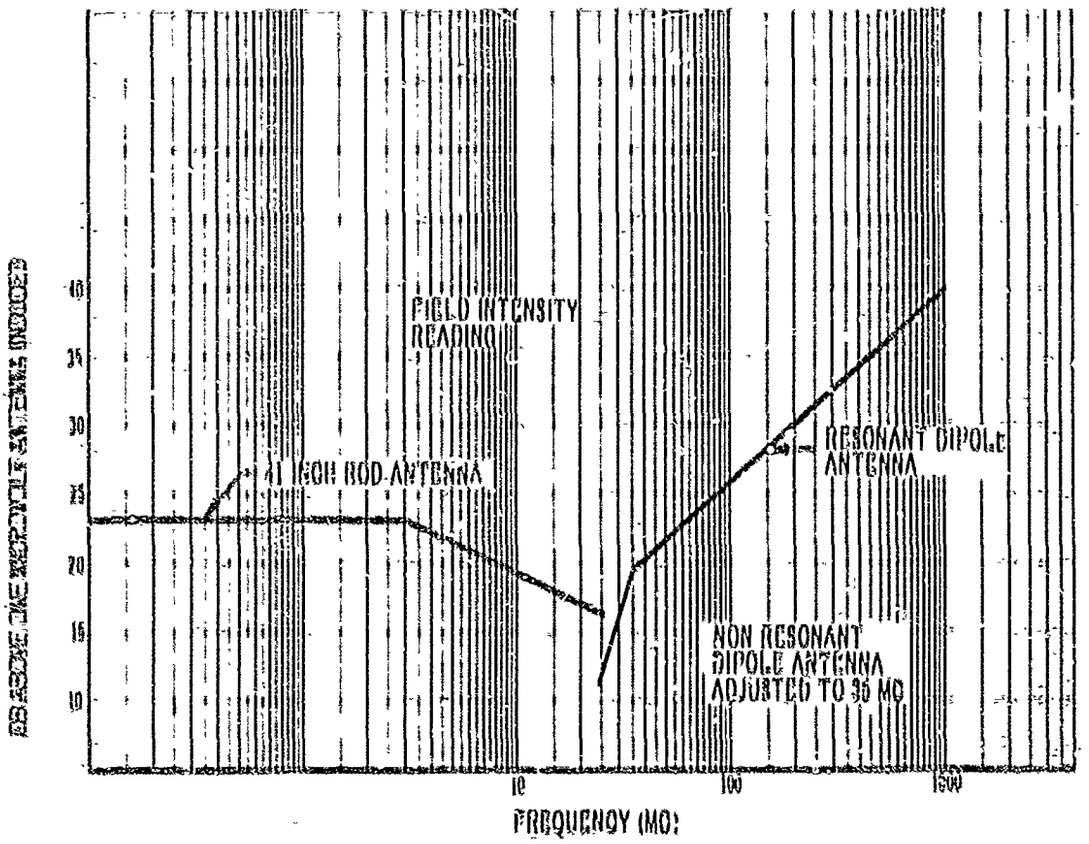

Figure 16. Narrow Band (CW) Radiated Interference Limits

c. Free stream ambient pressure (see Par. 3.2.10)

d. Exhaust nozzle static pressure (see Par. 3.2.10.2)

e. Nozzle area (see Par. 3.2.10.3)

f. Fuel temperature (see Par. 3.2.9.0)

g. Fuel flow (turbine + A/B) (see Par. 3.2.9.8)

h. Oil pressure (engine) (see Par. 3.2.10.5)

i. Oil temperature (see Par. 3.2.10.6)

j. Thrust reverser position switches (see Par. 3.2.7.2)

k. Oil pressure (oil filter Δ P) (see Par. 3.2.10.5)

l. Windmill brake position indicator switch (see Par. 3.2.20.1)

m. Low oil pressure warning switch (see Par. 3.2.10.5)

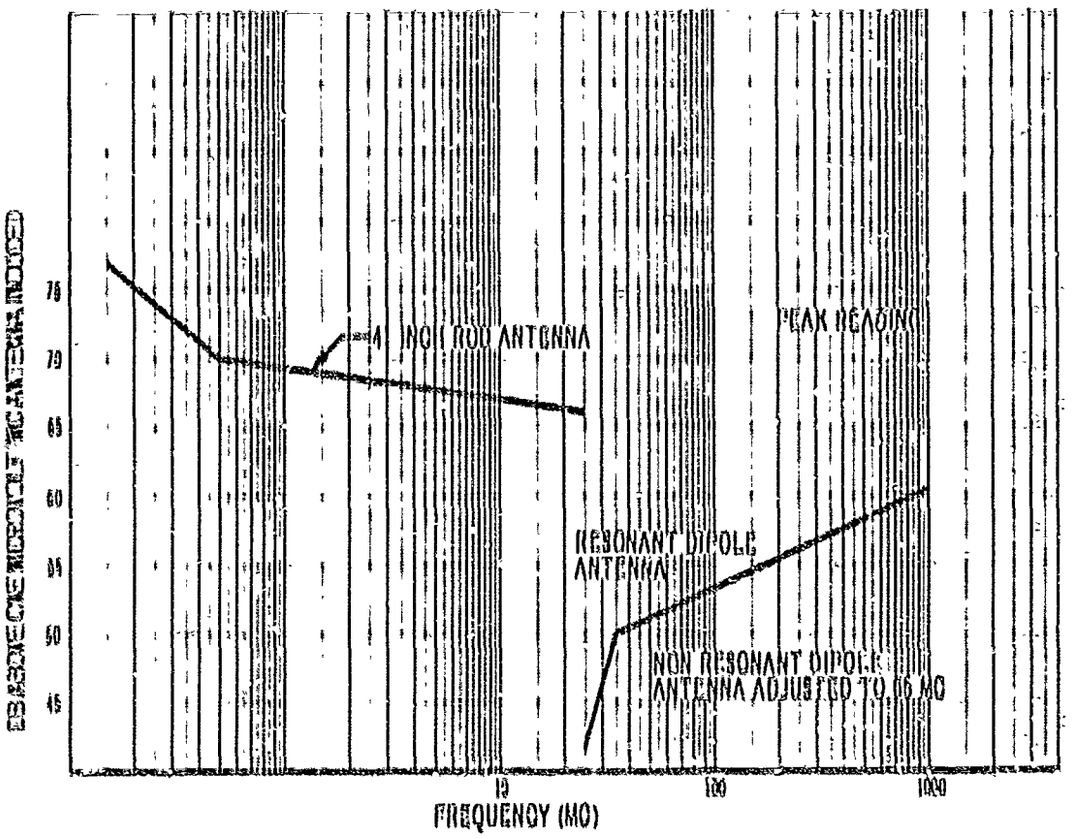

Figure 17. Broad Band and Pulsed (CW) Radiated Interference Limits

n. Vibration (comp. and turbine) (see Par. 3.2.21.1)

o. Oil quantity (see Par. 3.2.16.3)

p. Secondary air valve position (see Par. 3.2.14.1)

q. Load cell force indicator (see Par. 3.2.10.4)

r. Engine anti-icing system indication (see Par. 3.2.10.1)

s. Turbine cooling airflow indication (see Par. 3.2.8.3.1)

3.2.10 Engine Thrust Indication
Ambient total pressure, engine exhaust nozzle static pressure, primary nozzle area (see Par. 3.2.10.5) and net axial force shall be used to provide thrust indication.

3.2.10.2 Exhaust Nozzle Static Pressure
A port (AND 10050-4) on the engine shall provide a source for sensing engine exhaust nozzle static pressure. The pressure source shall be accurate within ±0.5 percent for power settings up to maximum dry rated thrust.

3.2.16.3 Primary Nozzle Area
A linear variable differential transformer (LVDT) shall be provided on the engine which will sense primary exhaust nozzle area within 2 percent at take off condition.

3.2.16.4 Force Indicator
The Boeing-furnished load cell will be attached to the engine by using the mounting provisions shown in Fig. 7.

3.2.17 Engine Starting Requirements

3.2.17.1 Torque
The maximum and minimum starting torques versus rpm shall be included in the engine model specification. The maximum starting torque at the PTO pad shall not exceed 1300 ft lb.

3.2.17.2 Starting Time
The time required to start an uninstalled engine shall be no longer than 35 sec at standard sea level conditions.

3.2.17.2.1 Restarting Time
The maximum required time between ground starting attempts as determined by engine limitations shall be 30 sec.

3.2.17.3 Starting Envelope
The engine shall start consistently at any point within the engine operating envelope defined in Fig. 3.

3.2.17.4 Cold Starting
The engine shall start consistently in 60 sec immediately following 12 hr soaks at -50°F. See Par. 3.1.6 for fuel and lube oil limitation.

3.2.18 Idle
On the ground, under standard conditions, up to 6,000 ft altitude with the power lever in the low idle position, the estimated thrust shall not exceed 2,100 lb per engine with a 265 hp load at the PTO pad, a total of 35 hp at the inlet hydraulic pump pads, an air bleed of 2.1 lb/sec, and 96 percent ram recovery at the inlet.

3.2.19 Engine Air Induction System

3.2.19.1 Stability
Under steady-state operating conditions, within the operating limits defined in Fig. 3, of this document, engine thrust oscillation between idle and maximum dry thrust shall not exceed ±0.20 percent of maximum dry thrust at idle power setting, increasing linearly to ±1.0 percent of maximum dry thrust at maximum dry power setting. During after burner operation, the thrust variation shall not exceed ±1 percent of the normal thrust level for that specific power setting.

The engine shall continue to operate satisfactorily in spite of any single supersonic inlet control failure within the allowable engine limits per Pars. 3.2.19.2 and 3.2.19.3.

During steady-state operating conditions of the aircraft with a steady power demand to the engine within the operating limits defined in Fig. 8 of this document, the airflow variation or oscillation attributable to any engine shall be limited to the values shown below:

Mach Number	Engine Power Setting	Airflow Variation
0 to 1.6	Speeds at or above 90% rpm	±1%
1.6 to Max.	Speeds at or above 92% rpm	±1/2%

The maximum airflow variation span, considering all engines, shall not exceed ±3 percent for given operating conditions.

8.2.10.2 Surge
The engine and inlet system shall be designed with the objective of preventing engine surges. However, the engine shall be capable of withstanding occasional surges without mechanical damage.

8.2.10.3 Engine Inlet Distortion Overlap
In order to minimize the problem of inlet/engine compatibility, some levels of distortion overlap will be provided for the engine and inlet. The categories of distortion are defined as follows:

Distortion Levels	Flight Condition	Engine Effect
a. Steady state - continuous operation	Subsonic cruise Supersonic cruise	No performance loss or decrease in engine life
b. Time limited - normal transients	Aircraft acceleration and deceleration, maneuvers, power transients, gusts, etc.	No stall, surge or flameout. Some performance loss may result.
c. Emergency transients (time limit = 16 sec)	Unstarts, restarts, control failures, inlet failures, inlet buzz	No mechanical damage

The allowable distortion levels for the inlet and engine are as follows:

Distortion Level	Inlet Allowable Distortion NDI	Engine Allowable Distortion NDI	Design Overlap
(1) Steady state	8%	10%	2% ▷
(2) Transients	15%	20%	5%
(3) Emergency	Any Level	Any Level	---

▷ This provides a 12 percent margin with respect to engine stall for normal cruise conditions.

The engine shall be capable of withstanding without mechanical damage instantaneous decrease in inlet total pressure of approximately 65 percent in 1/20 of a second, followed by a return within 8 sec to a stabilized flow. The unstarting at the stabilized flow condition shall be within limits per condition (b) above.

8.9.10.4 Engine Variations Affecting Inlet Performance
During starting and for engine speeds below idle, the instantaneous rate of change of engine airflow is not critical.

During subsonic flight ($M \leq 1$) at power settings above idle, the rate of change of engine airflow during acceleration, deceleration, augmentor lightoff and shutdown shall be as estimated by the Dynasar deck.

During supersonic flight ($M > 1$), engine airflow changes during engine acceleration, deceleration, augmentor lightoff and shutdown shall be as estimated by the Dynasar deck.

Airflow variations for steady state conditions are defined in Par. 8.9.10.1. A method shall be provided in the engine for matching the steady state airflow of the inlet and engine at cruise condition with the inlet bypass doors closed. The system shall be capable of matching the inlet and engine with a resulting inlet stability margin of 3 percent pressure recovery.

The engine case forward of the first rotor stage shall be considered part of the subsonic diffuser section of the supersonic inlet. All vanes, struts, slots and doors located in this section shall be closely coordinated with Boeing in order to effect the optimum engine/inlet compatibility.

The supersonic inlet shall continue to operate satisfactorily in spite of a single failure within the engine.

8.9.10.5 Thrust Transients
The transient characteristics of the engine shall be compatible with all operating requirements. During the selection of power lever positions in any sequence at any rate, freedom from objectionable overspeed, over-temperature, combustion instability, combustion extinction, and compressor instability shall be maintained. For rapid power lever movements (1 sec or less), the time required to accomplish 65 percent of the thrust change safely shall not exceed the values specified below. The total time required to accomplish the specified transients shall not exceed twice the time specified for 65 percent of the thrust change. The thrust transients shall be considered accomplished when the net jet thrust is maintained within ±3 percent of the final value. All transients specified are based on standard conditions, with loading of accessory drives and compressor bleed flow as shown in the table below and using the exhaust system as defined for the aircraft installation.

POWER LEVER POSITIONS Sea Level, Standard Day	Transient Time (Sec.)		
	Installed		Non-Installed
	**	***	
*From Idle (61% rpm) to maximum dry	7	7	6
*From Idle (61% rpm) to max. thrust available	11	11	10
*From Max. Dry to Max. Thrust available	7	7	7
*From Max. Thrust Avail. to Idle (61%) Thrust	6	6	6
*From Max. Dry Thrust to Idle (61%) Thrust	5	5	5
From Max. Dry Thrust to Full Reverse Thrust 50 to 150 knots	5.5	5.5	5.5

*Static Condition
**(1) 97% inlet recovery
(2) 2.1 lb/sec compressor bleed flow
(3) 500 hp accessory loading
***(1) 97% inlet recovery
(2) 4.2 lb/sec compressor bleed flow
(3) 400 hp accessory loading

3.2.20 Stopping
Normal stopping of the engine shall be accomplished by the use of the selector valve lever with the power lever in the idle position. It shall be possible to shutoff the fuel supply at any engine operating condition by the selector valve lever without damage to the engine.

3.2.20.1 Windmilling
The engine shall be equipped with a windmill brake to reduce the engine rpm to no more than 20 percent when the engine is shutdown at airplane cruise conditions (M_H = 2.7, 60,000 ft altitude). The actuator shall be controlled by the selector valve in the cockpit. No damage to the engine shall result when the windmill brake is applied by the normal controls at any engine operating condition. In the event of actuator failure, the brake shall remain in the position occupied at the time of failure. A transmitter shall be provided to remotely indicate the opened and closed position of the engine brake.

3.2.21 Engine Vibration
The engine shall be designed and constructed to function throughout its normal operating range of rotational speeds and engine powers without inducing excessive stress in any of the engine parts because of vibration.

The engine unbalance, at cruise rpm, shall not be greater than to cause a maximum of 4 mils double amplitude displacement of engine case at each bearing support as measured on GE's test stand prior to shipment. The engine

connection points for power control and selector valve attachments shall not exceed displacement of 4 mils double amplitude due to engine unbalance.

3.2.21.1 Vibration Sensor
Provisions shall be made for installing two Boeing-furnished vibration transducers (one at the compressor case and another at the turbine case).

3.2.22 Engine Foreign Object Ingestion Characteristics
The engine shall continue to operate satisfactorily until the aircraft can be landed and deliver no less than 75 percent of the thrust for any given power setting after occurrence of any of the following conditions, excluding Par. 3.2.22.3, while being operated at maximum non-augmented power.

3.2.22.1 Hail Ingestion
The engine shall be designed to withstand the following ingestions at a relative velocity of 375 kn without incurring structural failure.

a. A total of 60 hailstones from 3/4 to 1-1/8 in. in diameter at a rate of 1/min.

b. A total of 20 large hailstones (ice balls) from 2.5 to 3.0 in. in diameter at a rate of 1/min.

3.2.22.2 Ice Slab Ingestion
Ingestion of an ice slab 2 in. thick by 8 x 8 in. at a relative velocity of 100 kn.

3.2.22.3 Bird Ingestion
The engine shall continue to operate satisfactorily for a minimum of 1 hr and deliver no less than 85 percent of takeoff thrust after ingesting up to 6 lb of birds in 0.25 sec.

3.2.22.4 Rain Ingestion
The engine shall start and/or continue to operate satisfactorily during a severe rain storm, (6 in. of rain or 0.005 lb water per lb of air) that may be encountered either on the ground or in subsonic flight.

3.2.23 Engine Fire Protection Provisions
The engine exhaust section shall be isolated from the accessory section with a circumferential firewall bulkhead. The upper quadrant of the exterior case of the exhaust section aft of the bulkhead, shall provide the functions of a firewall for engine/airframe isolation as shown in Fig. 7.

4. QUALIFICATION REQUIREMENTS

4.1 CERTIFICATION AND DEMONSTRATION REQUIREMENTS

4.1.1 General

General Electric's tests required to prove compliance with all requirements of this specification, shall be conducted as specified herein and additionally as determined to be necessary by mutual agreement. Data from these tests shall be made available to Boeing.

Boeing and GE personnel shall be given all reasonable access to each other's facilities and test procedures used to determine conformance with this specification, and the Engine Model Specification.

For the purpose of this document, performance definitions are as follows:

a. Guaranteed performance is the level of performance described in General Electric's model specification per Par. 2.2.14.

b. Estimated performance is the performance calculated by the customer deck supplied by General Electric per Par. 8.1.1.8, and is consistent with guaranteed performance.

c. Installed performance is the measured inflight performance of the aircraft installed engine which demonstrates flight performance.

4.1.2 FTS Certification Requirements (Phase III)

General Electric shall compile a document describing in detail the Flight Test Status (FTS) certification requirements and coordinate with Boeing prior to FAA approval. In the event the FTS certification plan is not acceptable to Boeing in the areas related to engine/airframe interface, GE and Boeing will agree on a revised plan for submittal to the FAA.

It shall be GE's responsibility to conduct tests to satisfy the FTS certification requirements. Boeing shall have the option to witness the tests. A summary of the FTS test results shall be documented by GE and transmitted to Boeing prior to first flight of the prototype B-2707 airplane.

To be assured that the FTS engines will complete the 100-Hour Flight Test Evaluation Program, it shall be GE's objective, subject to FAA concurrence, to provide FTS engines which are capable of completing a minimum of 100 flight hours under normal operation conditions without premature engine removal for inspection, modification, or major maintenance.

It shall be GE's objective to develop a 30 min max augmentation rating of Type Certification level, subject to FAA concurrence, for purposes of special aircraft demonstrations.

4.1.3 Type Certification Requirements (Phases IV and V)
It shall be General Electric's responsibility to conduct engine tests to satisfy the FAA Engine Type Certification requirements.

The FAA, in conjunction with GE, airframe manufacturer and airlines shall establish the Type Certification requirements. In establishing these requirements, consideration should be given to performing endurance testing under the simulated operational environment of the B-2707 aircraft. This simulated operational environment should include inlet temperature, pressure recovery and airflow distortion. In any event, these requirements should include sufficient testing at sustained severity levels to ensure that the engine is capable of safe operation in commercial supersonic aircraft.

General Electric shall compile a document, describing in detail the Type Certification requirements and transmit to Boeing for concurrence.

If the Model B-2707 (GE) aircraft is required to have engines with British Air Registration Board (ARB) certification, GE will furnish Boeing the assistance prescribed in the Systems Responsibility Agreement to obtain such certification.

4.1.4 Guaranteed Performance Demonstration Requirements
Demonstration tests to show compliance with the ground and flight performance guarantees of the engines specified in Table I will be performed in a mutually agreeable testing laboratory having the capability of sea level static calibration and simulated subsonic and supersonic flight environment at altitude. The installed performance of the engine shall subsequently be demonstrated by flight test measurements in the Model B-2707 (GE) airplane. It is therefore implicit that Boeing and GE work together and mutually agree on the planning of, execution of, and analysis of the results from the ground laboratory, simulated altitude laboratory and airplane flight tests. The parties agree to work together to establish mutually acceptable procedures and criteria for accomplishing the objective set forth in the preceding sentence.

The primary responsibility for obtaining facilities, conducting the tests, and analyzing the data for the sea level static guaranteed performance demonstrations and simulated altitude guaranteed performance demonstrations shall be GE's.

The primary responsibility for obtaining facilities, conducting the test, and analyzing the data for the installed engine performance demonstrations shall be Boeing's.

4.2 ENGINE/AIRFRAME STATIC PERFORMANCE CALIBRATION REQUIREMENTS (Phase III)

4.2.1 General
The test hardware and calibration testing required for the static demonstration of the specified engine performance are defined in the following paragraphs.

4.2.2 Test Hardware
General Electric shall provide a reference bellmouth inlet for static calibration of the engine. General Electric shall fabricate a minimum of two bellmouth inlets of identical design, one to be sent to Boeing for Boeing-conducted calibration testing and the other to be retained by GE.

Boeing will require the support of GE to supply certain items of instrumentation and make provisions for others that are internal to the engine or require modification to the engine configuration. General Electric and Boeing shall coordinate these requirements early in the design phase. General Electric shall supply the mutually agreed upon instrumentation and provisions on the ground and flight test engines. The engines shall be tested and the instrumentation calibrated in GE's test facility prior to shipment to Boeing. The testing to be accomplished and basic instrumentation requirements shall be by mutual agreement.

To be assured that the results of ground, simulated altitude and flight testing are consistent, it shall be a requirement that the instrumentation also be consistent for all test phases. The instrumentation to be used for all performance demonstration tests shall be mutually agreed upon. General Electric will provide engineering coverage on tests to assure uniform interpretation of data.

4.2.3 Engine Ground Rig Performance Calibration Testing

4.2.3.1 General
Boeing will use the reference bellmouth inlet and a calibrated engine to calibrate Boeing's test facility. The static installed performance of the engine will be determined using both the reference bellmouth and Boeing production flight inlet during ground rig engine calibration of the FTS Engine. This will provide the incremental difference in the engine performance between the reference bellmouth and production inlet.

General Electric shall conduct performance calibrations of flight performance demonstration engines in a GE test facility using the reference bellmouth. This calibration shall include measurement of total inlet mass flow and determination of primary and secondary mass flows on one engine. The range of simulated flight conditions to be mutually agreed upon.

4.3 GUARANTEED ENGINE PERFORMANCE AND OPERATIONAL DEMONSTRATIONS (Phases III and IV or V)

4.3.1 General
General Electric shall compile a document describing in detail, for the sea level static guaranteed performance demonstration and for the altitude guaranteed performance demonstration in the simulated altitude facility, calibration procedures, instrumentation systems and accuracies, data reduction methods, and calculation procedures used in data analysis for transmittal to Boeing prior to guarantee demonstration. In addition to the above document, GE shall supply to Boeing, engine performance prediction, data reduction and data analysis computer decks which will be compatible with the

IBM 7094 computer. These computer decks shall be updated periodically by GE as additional information from test results becomes available or improved instrumentation and data analysis techniques are developed.

4.3.1.2 Demonstration Tests
The tests conducted to demonstrate guaranteed performance shall include the tests outlined below. The objectives of these tests are as follows:

a. Demonstrate engine performance guarantees as shown in Table I.

b. Provide data for verification and updating of the installed engine performance prediction deck.

Guaranteed demonstration results will be documented in detail by GE and transmitted to Boeing.

4.3.1.2.1 Sea Level Tests
The sea level test will be designed to demonstrate engine performance guarantees and operational characteristics by performing, as a minimum, the tests listed below:

a. Steady-state performance demonstration to verify the specified performance as given in Table I.

b. Thrust reverser operation.

c. Acceleration and deceleration capability.

d. Inlet distortion tolerance.

e. Augmentor operation.

4.3.1.2.2 Simulated Altitude Tests
The simulated altitude tests will be designed to demonstrate engine performance guarantees and operational characteristics by performing, as a minimum, the tests listed below:

a. Steady-state performance demonstration of specified altitude performance guarantees as given in Table I.

b. Explore overall engine operating envelope.

c. Explore burner and afterburner operating envelopes.

d. Explore air start envelope (with or without boost pump).

e. Engine windmilling, windmill brake operation and locked rotor performance.

f. Acceleration and deceleration characteristics.

g. Inlet total pressure and total temperature transients.

h. Inlet distortion tolerance.

4.3.1.3 Test Requirements
The Boeing Company in conjunction with GE shall compile a document describing in detail for the installed performance demonstration on the Boeing test airplane, calibration procedures, instrumentation systems and accuracies, data reduction methods and calculation procedures used in data analysis for transmittal to GE prior to first flight of the Boeing test airplane.

The test program to demonstrate the installed performance will include as a minimum all of the tests outlined above. Additional tests to demonstrate installed performance, where required, will be mutually agreed upon by Boeing and GE. Boeing shall transmit to GE a detailed summary of the flight test results.

The engine performance guarantees shall be demonstrated using a typical production engine or a prototype engine substantially identical thereto. The measured engine performance will be corrected to a fuel having a lower heating value of 18,400 btu/lb.

4.3.2 Basic Engine Performance

4.3.2.1 Sea Level Static Performance Demonstration (Calibration Stand)
The sea level static performance guarantees listed in Table I shall be demonstrated by GE using the reference bellmouth defined in Par. 4.2.2.1. This test shall be conducted in a suitable test facility. Thrust and fuel flow shall be measured using calibrated instrumentation covering a range of engine thrust settings from idle to maximum augmented power. Total inlet airflow shall be measured using a calibrated bellmouth. Tests may be conducted at other than stipulated ambient temperatures and pressures. Performance shall be corrected to specified Table I conditions.

4.3.2.2 Simulated Altitude Performance Demonstration
The demonstration of altitude performance guarantees defined in Par 4.3.1.2 shall be conducted by GE in an altitude test facility.

For cases where the altitude facility is not capable of adequately simulating nozzle external flow or discharge static pressure, the measured thrust will be corrected by the performance prediction deck to reflect the true environment. These corrections will make use of full-scale static test data and nozzle model thrust coefficient test data in a previously agreed upon mannor.

The demonstration of any altitude performance points which exceed the capability of the laboratory will be calculated from test data obtained at test conditions which lie within the capability of the laboratory.

4.3.3 Installed Engine Performance

4.3.3.1 Flight Performance Demonstration
Boeing shall conduct flight tests to demonstrate the installed engine performance and operation over the airplane flight and maneuver envelopes. Installed engine performance will be demonstrated and verified. General Electric shall monitor and support the tests.

The performance points of Table I shall be demonstrated by full-scale flight test utilizing a calibrated engine previously tested in GE's Simulated Altitude Facility. The flight tests shall be conducted with GE's test hardware and a production flight inlet provided by Boeing.

The flight tests shall be conducted at Boeing Flight Test facilities. All testing will be done in accordance with procedures agreed upon by GE and Boeing.

Thrust and fuel flow shall be measured using calibrated instrumentation covering a range of engine thrust settings from idle to maximum augmented power. The inlet airflow shall be measured using precise inflight instrumentation. The functional and thermodynamic performance of the nozzle shall be determined. Tests may be conducted at other than stipulated ambient temperatures and pressure altitudes. Performance data shall be corrected by the performance prediction deck to specified Table I conditions.

4.3.4 Noise Demonstration (Phases as Indicated)

4.3.4.1 Static
General Electric shall conduct a demonstration test on an outdoor test stand, using a prototype engine or an acoustically similar engine with the reference bellmouth and production exhaust system. At least six test runs shall be made at each condition and the results averaged to demonstrate compliance with the guarantee.

General Electric shall submit a document showing guarantee compliance. In addition, this document shall include a detailed description of the acoustic measurement and analysis system. The Boeing Company shall have the option of taking noise measurements parallel to GE's during the engine demonstration test.

General Electric shall provide noise level test data for an engine acoustically similar to the first flight engines. This data is to be provided within six months after delivery of the first flight engines.

4.3.4.2 Inflight
Flight tests shall be conducted by Boeing to demonstrate noise characteristics. The tests shall be conducted on the Model B-2707 (GE) airplane using the production flight inlet and production exhaust systems or acoustically equivalent hardware. With the airplane operating at a mutually agreed altitude, sound measurements shall be made on the ground under the flight path. At least six test runs shall be made at each condition and the results averaged to demonstrate noise characteristics. The results of the test shall be documented by Boeing which includes a detailed description of the measurement and analysis

systems. General Electric shall have the option of taking noise measurements parallel to Boeing during the demonstration tests.

4.3.4.3 Sound Calculations
The perceived noise level calculations shall be made by use of the Noys table as defined in SAE ARP 865, Ref. Par. 2.2.8. The discrete frequency peaks generated by the passage of the compressor or turbine blades shall be measured as the time average for 60 sec of the output of 1/24-octave band filter or a 50-cycle fixed band width filter tuned to the frequency being measured. The noise data shall be normalized to a standard sea level, 59°F and 70 percent RH day by standard SAE practices, per Ref. Par. 2.2.9.

4.3.5 Engine Airflow Demonstration (Phase III)
The production engine airflow at engine operating conditions shown in Table 1 will be verified by test procedures mutually agreeable to GE and Boeing.

4.3.6 Thrust Reverser Demonstration (Phases III and IV)

4.3.6.1 Static Reverser Performance Demonstration
General Electric shall conduct a test to demonstrate static reverse thrust performance in a suitable test stand that prevents reingestion. Reverse thrust shall be measured using calibrated instrumentation covering the range of reverse engine thrust settings from idle to maximum reverse. Performance shall be corrected to specified Table I conditions. Demonstration results shall be documented in detail and transmitted to Boeing.

4.3.6.2 Installed Reverser Performance Demonstration
Boeing shall conduct tests to demonstrate installed thrust performance and operation. Static reverser tests shall be conducted during Boeing's engine ground rig testing, and high speed taxi and landing reverser tests shall be conducted during Boeing's flight test programs.

4.3.7 Vibration Demonstration (Phases as Indicated)
General Electric shall demonstrate compliance with the maximum allowable vibration as specified in Par. 3.2.21 by conducting the following tests:

a. Conduct lineal vibration surveys throughout the normal engine operating range (idle to maximum augmented thrust settings) on an experimental engine using normal GE production acceptance hardware. The location of vibration pickups for demonstration shall be established by mutual agreement. Also, the number, location and vibration limits of pickups to be used for production acceptance runs shall be mutually determined from this demonstration test.

b. Conduct a lineal vibration survey throughout the normal engine operating range (idle to maximum augmented thrust setting) on a production engine using Boeing supplied production inlet. The location of vibration pickups for the demonstration shall be established by mutual agreement. In the event that the results of this test using a production engine and production Boeing inlet do not meet the requirements of Par. 3.2.21, Boeing and GE will work together using their best efforts to determine the cause for the discrepancy and to establish the required corrective actions.

Boeing shall conduct a vibration survey using production engines and production airplane hardware on a static ground rig stand and a flight test airplane to determine installation effects on engine vibration levels.

4.3.8 Bleed Air Quality Demonstration (Phase IV)
General Electric shall demonstrate compliance with the requirements of Par. 3.2.2 by conducting the following tests on an experimental engine aerodynamically similar to production engine configurations:

a. With the engine operating at ground idle and at 70 percent and 90 percent max nonaugmented thrust, the quantity of contaminant discharged from the high-pressure bleed shall be obtained while introducing a given quantity of contaminant into the engine over a period of time. The quantity of air bleed flow and other detail test procedures are to be established by mutual agreement.

For demonstration, the contaminant shall be coarse Arizona road duct AC Spark Plug Co. PN 1543637 and shall be introduced in a manner to obtain substantially even distribution over the engine inlet area. The bleed air extracted shall not contain a greater concentration of engine ingested contaminants (pounds of contaminant per pound of air) than the concentration introduced within a test accuracy of ±25 percent.

Samples of compressor bleed air shall be taken from each bleed air outlet at temperatures within the ranges corresponding to the bleed air requirements of Table V. At the same time the bleed air samples are taken, a sample of the air entering the compressor inlet shall be taken. All samples shall be properly identified. An analysis of the samples shall be made, and if any of the contamination listed in Table V has been contributed to the bleed air by operation of the engine, the concentration of contaminants shall be determined using mutually agreeable test methods.

This test shall be conducted on an engine incorporating lubrication system elements and seals which shall have been subjected to a minimum of 150 hr of operation.

Samples from the compressor discharge stage bleed air outlet shall be taken at temperature conditions obtained at ground idle and at 70 and 90 percent of maximum nonaugmented takeoff thrust.

4.3.9 Inlet Distortion Tolerance Demonstration (Phase III)
General Electric shall demonstrate compliance with the maximum inlet distortion tolerances and limits specified in Par. 3.2.19.3 by conducting the following tests:

a. Conduct inlet distortion tolerance test for sea level static and altitude conditions on a prototype engine aerodynamically similar to production engine configuration. The distortion patterns of the Boeing inlet are to be simulated for each particular flight Mach number and altitude simulated. Pressure profile surveys shall be taken at the compressor inlet over the operating range of the engine. The method of test and location of inlet pressure pickups for demonstration shall be established by mutual agreement. Demonstration results shall be documented in detail and transmitted to Boeing.

b. Conduct inlet distortion tolerance tests for altitude conditions on a prototype engine aerodynamically similar to production engine configuration with Boeing flight inlet. This demonstration shall be done in conjunction with the joint GE — Boeing Inlet/Engine AEDC test program. Reference Par. 5.2.1.3. This joint program shall be used to demonstrate the specified inlet distortion levels of the inlet/engine combination.

5. COMPATIBILITY DEVELOPMENT PLAN (Phase III)

5.1 GENERAL

General Electric and Boeing's tests required to develop, integrate, and flight test the propulsion system shall be conducted as specified herein and additionally as determined to be necessary by mutual agreement. Specified data from these tests shall be made available to GE or Boeing where required. The responsibility for providing facilities and for conducting or supporting the tests shall be accomplished as specified in the following paragraphs.

5.2 INLET/ENGINE COMPATIBILITY PLAN (Phase III)

Boeing shall have prime responsibility for the development of the air induction and control system. General Electric shall have prime responsibility to establish the engine tolerances to inlet distortion and define requirements, and provide them to Boeing. This includes distortion definition, measurement requirements and calculation procedures. The distortion information will include definition of the engine performance for distortion levels above the nominal "no performance" loss levels.

5.2.1 Boeing Inlet/Engine Compatibility Tests

5.2.1.1 Model Test Program

Boeing shall conduct scale inlet model tests to obtain distortion and pressure recovery data and inlet design data. Boeing shall provide GE with a summary of the test results. Distortion data from these model tests shall be used by GE to establish requirements for the test of various distortion patterns to evaluate the engine tolerance to distortion.

5.2.1.2 J-85 Engine Tests (AEDC)

Boeing shall conduct small engine/inlet tests (1/3 scale) at AEDC in mid-1967 for early inlet/engine compatibility verification. These tests will be used to define the performance of the inlet and the inlet controller and to investigate inlet/engine compatibility during steady state and transient operating conditions, including unstart-restart sequencing. This test will also be used to verify and update the mathematical simulation techniques of a short coupled inlet/engine system. Boeing shall provide General Electric with a summary of the test results.

5.2.1.3 Full-Scale AEDC Tests

Boeing, in conjunction with General Electric, shall plan and conduct full scale inlet/engine compatibility tests at AEDC. These tests shall also demonstrate the specified inlet distortion levels of the inlet/engine combination. Boeing will provide the instrumented inlet for these tests.

The tests will be conducted in accordance with the Coordinated Inlet/Engine Test Plan (Ref. Document D6A10007-1), reference Par. 2.2.17. Boeing and GE shall be responsible for jointly supporting the program as specified in the referenced test plan.

5.2.1.4 Full-Scale Sea Level Static Tests
Boeing shall conduct engine ground rig tests to evaluate the inlet/engine compatibility under sea level static conditions.

5.2.2 General Electric Inlet/Engine Compatibility Tests

5.2.2.1 Compressor Component Tests

a. Distortion Screen Tests
General Electric shall conduct distortion screen tests with a full scale compressor rig throughout the full corrected speed flow and pressure ratio range. General Electric shall evaluate the tolerances to inlet distortion and provide Boeing with a summary of the test results. General Electric will simulate the Boeing inlet distortion patterns in these tests.

b. Centerbody Venturi Tests
Combined steady state and dynamic pressure distortion effects will be imposed on the compressor, created by the inflow effects of boundary layer mixing turbulence from the normal shock and vortex generator created turbulence. The boiler plate hardware for these tests will be provided by General Electric. Scale model testing of a centerbody venturi simulator (inlet throat and subsonic diffuser simulation) will be done by General Electric to verify good simulation and range of airflow variation. Boeing will supply inlet contours and installation details of the inlet for this simulation, and will receive test result summaries.

5.2.2.2 Engine Tests
Under this category, inflow testing will be done under sea level and flight conditions (heated inflow). Steady-state and dynamic inflow is simulated and engine transient conditions will be imposed. A full scale complete engine will be used.

a. Screen Testing
Screen testing similar to testing done on the compressor rig (updating of distortion patterns will be done where applicable) will be done to verify engine operating characteristics under various distortion levels (N_{DI} updating).

b. Engine/Inlet Ground Testing
Cross wind effects and inlet choked mode effects will be evaluated by General Electric. Crosswind up to 30 kn (at 0 - 180 deg) will be simulated. A full scale engine and boiler plate inlet with bypass doors and several centerbody positions will be used. General Electric will provide the test set up for crosswind. Boeing will provide the centerbodies and inlet cowl with the portion of the bypass doors affecting takeoff operation simulated. Boeing will assist in the test as required and will receive the test results obtained.

5.2.2.3 Inlet/Simulator — Engine Tests
At least one year prior to full-scale inlet-engine testing at AEDC, GE will perform testing in their altitude test facilities with a simulated inlet and full-scale engine. Boeing will provide a simulated boiler plate inlet, centerbody

positions for important flight regimes and cowling with operating bypass doors. General Electric will provide Boeing the requirements for the test installation, such as the inlet bellmouth. General Electric will provide the secondary air flow extraction ports, and perform scale model tests to ensure satisfactory engine inflow simulation. These scale model tests will also be used by GE to provide Boeing with early evaluation of distortion airflow transient effects and inlet/engine compatibility during engine transient conditions. Boeing will provide inlet geometry lines and distortion patterns from wind tunnel testing.

The test objectives of this full-scale simulated inlet engine testing (heated conditions) is to determine the effect of terminal shock location, distortion and turbulence on the engine, the effect of bypass and secondary air flow variations on the engine, and the effect of engine-generated disturbances on the terminal shock position. Boeing will assist in the test as required and receive the test results.

5.2.3 Inlet/Engine Dynamic Analysis

5.2.3.1 Engine Mathematical Model
General Electric shall provide Boeing with updated engine mathematical model computer decks as required. The format and capability of the engine mathematical model must be mutually agreed to by both parties. Coordinated efforts between Boeing and General Electric shall be made to eliminate any detrimental inlet/engine interactions.

5.2.3.2 Inlet/Engine Mathematical Model
Boeing shall conduct analyses and simulation studies to evaluate the aerodynamic and control interactions between the inlet and engine. General Electric will be supplied with the mathematical models of these studies. The data will be used to predict the results of the various full-scale inlet/engine compatibility tests.

5.3 EXHAUST SYSTEM INTEGRATION TESTS (Phase III)
General Electric shall have prime responsibility for the development of the exhaust system in accordance with Boeing's requirements.

5.3.1 Thrust Reverser Development

5.3.1.1 Boeing Reverser Tests

a. Ingestion Tests (Model)
Boeing shall conduct aircraft model wind tunnel tests to determine the thrust reverser exhaust flow pattern requirements with respect to minimizing adverse reingestion and impingement effects. Boeing shall provide General Electric with a summary of the test results.

b. Reverser/Airplane Effectiveness Tests (Model)
Boeing shall conduct aircraft model wind tunnel tests to define the reverser flow pattern with respect to reverse thrust effectiveness. Boeing shall provide GE with a summary of the test results.

c. Definition of Reverser Requirements
Boeing shall define the reverser performance requirements, reverser exhaust external flow path requirements, and the airframe control system requirements. Boeing shall provide General Electric with these requirements.

d. Full-Scale Tests
Boeing shall conduct full scale engine ground rig tests to evaluate reverser performance and operation, reverser thrust response, reingestion effects, and fail safe characteristics (see Sec. 5.4.2).

5.3.1.2 General Electric Reverser Tests

a. Model Tests
General Electric shall conduct model tests to develop the reverser and reverser exit cover door design to meet Boeing's requirements.

b. Large Scale Engine Tests
General Electric shall conduct large scale engine tests to evaluate the performance operation and fail safe characteristics of the reverser. General Electric shall provide Boeing with a summary of the test results.

c. Full-Scale Tests
General Electric shall conduct full scale engine static tests to evaluate reverser performance and operation and to perform a qualification test on the reverser. Boeing shall have the option to witness the tests.

5.3.2 Nozzle Development

5.3.2.1 Boeing Model Tests

a. Wing/Pod Integration Tests
Boeing shall conduct model tests with the nozzle in the presence of a wing or wing-body to determine nozzle boattail pressure distribution and nozzle installed performance. Boeing shall provide General Electric with a summary of the test results. General Electric shall provide Boeing with current models or contours for their nozzle, and inform Boeing of any revisions in the contours at the time they are incorporated.

5.3.2.2 General Electric Tests

a. Model Tests
General Electric shall conduct nozzle model tests to determine nozzle performance and ejector pumping characteristics, and to acquire data required for the design of the free-floating secondary flaps.

b. AEDC Tests
General Electric shall conduct full scale engine tests at AEDC to demonstrate nozzle performance and operation.

5.3.3 Noise Suppression Development

5.3.3.1 Boeing Tests

a. Model Tests

Boeing shall conduct scale model tests of jet noise suppressors under jet conditions identical to those proposed for the SST engine. Evaluation of the noise characteristics of the suppressor nozzles shall be in terms of overall and octave band sound pressure levels as well as perceived noise level. Promising designs will be reviewed with General Electric to determine their adaptability to the engine. The objective of these tests is to select promising designs for further analysis and full scale testing.

b. Full-Scale Tests

Boeing shall conduct full scale J-75 engine tests to evaluate promising jet noise suppressors obtained from model tests. The final nozzle configurations shall be tested on a J-75 engine. Test conditions on a J-75 will duplicate as closely as possible the conditions required on the SST engine during takeoff and climb-out maneuvers. Evaluation of the noise characteristics of the suppressor nozzles shall be in terms of overall and octave band sound pressure level as well as perceived noise level. Boeing shall provide General Electric with a summary of the test results. The objective of these tests is to determine the jet noise suppression characteristics and performance losses for the full scale exhaust nozzle.

5.3.3.2 General Electric Tests

a. Model Tests

General Electric shall conduct small scale jet noise suppression tests which may be applicable to the engine. The objective of these tests is to select promising designs for further analysis and full scale testing.

b. Full-Scale Testing

(1) General Electric shall conduct full scale compressor noise tests to determine noise generating and propagating characteristics. General Electric shall provide Boeing with a summary of the test results. Data shall be in the form of octave band and 1/24 the octave band SPL over a complete polar grid around the engine. Several thrusts from idle to full power shall be included.

(2) General Electric shall conduct full-scale engine noise and performance tests to evaluate the basic configuration and the final suppressor configuration for the exhaust nozzles. General Electric shall provide Boeing with a summary of the test results. Noise data shall be in the form of octave band SPL over a complete polar grid around the engine. Several thrusts from idle to full power shall be included.

(3) General Electric shall conduct full scale noise and performance tests on the engine to determine near and far field noise levels with an acoustically similar aircraft inlet installed. General Electric shall provide Boeing with a summary of the test results. Noise data shall be in the form of octave band and 1/24 octave band SPL's over a complete polar grid around the engine. Several thrusts from idle to full power shall be included. Boeing shall have the option to witness the tests and take parallel noise measurements.

(4) The objective of these tests and analysis is to obtain a noise suppression system compatible with the engine and airframe which results in noise levels at or better than FAA objectives during all phases of SST operation.

5.4 ENGINE/AIRFRAME INSTALLATION TESTS

The full scale propulsion installation tests required to evaluate engine/airframe integration and compatibility, and to evaluate the performance and operation of propulsion subsystems and components, are included herein.

5.4.1 Engine/Airframe Installation Requirements

All features affecting aircraft/engine interface shall be evaluated during the aircraft development program to provide assurance that engine operation under installed conditions is in accordance with the design intent. Boeing will supply to GE the data necessary for GE to validate the engine installation.

5.4.2 Boeing Ground Rig Tests

Boeing shall conduct engine ground rig tests to evaluate the performance, operation and compatibility of all components of the propulsion installation including engine starting system, engine oil cooling system, accessory power drive and airbleed system, engine and cowl cooling environment, fire detection and extinguishing system, engine instrumentation, engine controls, nacelle drainage, engine fuel system, engine and accessory vibration, and engine noise. General Electric shall supply Boeing with calibrated ground rig test engines and logistically support the test program as required. Boeing will provide GE with the specific details of the test and results.

5.4.3 General Electric Ground Rig Tests

General Electric shall conduct engine ground rig tests to evaluate and demonstrate the performance, operation, and noise levels of the engine, including: inlet/nacelle/engine compatibility, thrust reverser performance and qualification, and inlet and exhaust noise suppression evaluation.

It is also desirable that GE conduct a test using Boeing supplied, engine-driven airframe accessories to assist in determining compatibility of the engine and airframe components. A mutually agreeable plan will be developed during the design period to accomplish this objective.

5.5 PHASE III FLIGHT TEST PROGRAM

5.5.1 General

The flight test demonstration of engine performance and operation, and the evaluation of the propulsion system, are included herein. Boeing shall conduct the flight tests. General Electric shall monitor and support these tests.

The following propulsion system flight tests will be accomplished during the Phase III flight test program:

5.5.2 Air Induction System Performance and Operation

Boeing shall conduct flight tests to demonstrate the air induction system performance and operation, and inlet/engine compatibility over the flight envelope of the airplane.

5.5.3 Engine Performance and Operation
Boeing shall conduct flight tests to demonstrate the installed engine performance and operation over the airplane flight and maneuver envelopes. Installed engine performance will be demonstrated as specified in Par. 4.3.3.1.

5.5.4 Evaluation of Propulsion Nacelle and System
Boeing shall conduct flight tests to demonstrate the engine and nacelle cowling for structural integrity over the flight envelope of the airplane and the operation and function of the propulsion systems. These tests shall include: nacelle and engine cooling, engine oil system, accessory operation, engine anti-icing, fire extinguishing system, engine instruments, nacelle drainage, engine fuel system, vibration surveys and automatic thrust control system.

5.5.5 Thrust Reverser Performance and Operation
Boeing shall conduct flight and taxi tests to determine reverse thrust effectiveness, reverser exhaust gas ingestion and impingement characteristics, and reverser fail safe characteristics under flight loads.

5.5.6 Noise Surveys
Boeing shall conduct ground, takeoff, and landing tests to demonstrate airport and community engine noise levels as specified in Par. 4.3.4.2.

6. PRODUCT ASSURANCE REQUIREMENTS

6.1 BASIC CONCEPTS AND DEFINITIONS

In the context used here, the term Product Assurance includes the subjects of Reliability, Safety, and Maintainability. The elements contained herein are required to integrate the engine into the B-2707 system and provide assurance during design and test that adequate levels of reliability, safety, and maintainability are inherent in the final design.

6.2 RESPONSIBILITIES

6.2.1 General

Boeing has overall responsibility and accountability for the reliability, safety, and maintainability of the B-2707. This responsibility includes system schedules, planning and reporting in addition to technical integration of the GE produced equipment.

General Electric has responsibility and accountability for the reliability, safety, and maintainability characteristics of the engine and basic engine accessories specified herein and for the conduct of tests or demonstrations required to ensure their achievement on the basic engine. This responsibility includes support to Boeing throughout the B-2707 Program to ensure achievement of overall system Product Assurance objectives as they relate to the basic engine and engine/airplane interfaces. This support includes provision of the data specified herein required for Boeing to fulfill system responsibilities.

6.2.2 Boeing Responsibilities

Boeing will assess the safety, reliability, and maintainability of the B-2707 and provide master schedules, planning, reporting, and integration for all Product Assurance elements. In fulfillment of these responsibilities, Boeing will provide to GE copies of the following items relative to reliability, safety, and maintainability.

a. Major program milestones.

b. Test and demonstration plans and requirements for flight test.

c. Operational and maintenance concepts to support the B-2707 system.

d. Time goals for:

(1) Performance of engine line maintenance tasks accomplished on the airplane.

(2) Performance of basic engine teardown, inspection, and assembly on the aircraft.

(3) Schedules for providing these items will be negotiated and included in the ancillary agreements.

e. Recommendations submitted for information or for decision of the FAA that involve GE furnished equipment.

f. The integrated Safety Engineering Program incorporating the General Electric Safety Engineering Plan.

g. Copies of engine malfunction and maintenance data assembled by Boeing personnel during Phase III.

In addition to the preceding, Boeing will:

h. Establish periodic meetings as may be required to ensure integration of the Product Assurance activities.

i. Develop, with GE, mutually compatible and acceptable data formats, flow processes, evaluation processes and reports as may be required.

6.2.3 General Electric Responsibilities
General Electric will report achievements against the reliability, safety, and maintainability objectives contained herein and will, in addition, provide technical representation to actively participate in the failure analysis team (see Par. 6.2.5).

6.2.4 Interface Elements
Sections 2.0 and 3.0 form the basis for identifying and defining mutually reacting malfunctions and malfunction effects.

6.2.5 Problem Analysis and Corrective Action
During the flight test and certification program, malfunctions and problems will undoubtedly occur requiring investigation, determination of responsibility, and identification of appropriate corrective action. The following will be accomplished in the event of failure or malfunction involving the engines or engine/airframe interfaces:

a. A failure analysis team will be established consisting of a Boeing and GE representative(s).

b. Where on-the-spot cause determination and corrective action are mutually agreed upon, a report will be prepared by the responsible party and the necessary corrective action accomplished.

c. Malfunctioning engine components will be forwarded to the GE B-2707 Spares store for disposition in accordance with the ancillary agreements. Parts or components requiring further investigation or analysis will be withdrawn from the store and later returned to the store in accordance with GE procedures. Analysis of the failed component will be accomplished by GE.

Where an engine/airframe interface problem is suspected, either party may request participation in the investigation. A full report will be prepared and signed by both parties where an engine/airframe problem is indicated.

d. For all joint investigations, in the event of a disagreement, dissenting opinion shall be included on the failure analysis report.

e. Copies of all reports will be provided to Boeing.

6.3 RELIABILITY

This section contains the minimum elements to fulfill system reliability responsibility and provide effective engine/airframe interface. To the maximum possible extent, these objectives shall be fulfilled as part of the basic contract with the FAA and shall not require additional nor different effort.

6.3.1 Design Objectives

6.3.1.1 Numerical Objectives

When operated within the environments and performance limits specified in Sec. 3.0 of this document, the reliability objectives shall be as shown in Table VIII.

Table VIII. Reliability Objectives

	End of Phase III	Mature Engine-2×10^6 Engine Flight Hr
a. MCBF (mean cycles before failure to start within 5 minutes)	1,500	39,000
b. Mean time between inflight shutdowns (hr)	450	11,100
c. Mean time between augmentor power loss (hr) [1]	270	6,660
d. Mean time between premature engine removals (hr)	160	4,000

[1] As defined by 100 percent augmentation power loss.

e. In addition, the engine shall be designed and constructed to function for 30 hr duration without failure of any engine component as a result of operating at a noise level as specified in Par. 3.2.1.2.3.

Degree of attainment of these objectives shall be demonstrated in accordance with Par. 6.3.2.1.

6.3.1.2 Failure Requirements

The preceding objectives shall be attained within the failure requirements specified in Sec. 3.0. These requirements are specifically related to, but are not limited to, Pars. 3.2.2.1.3, 3.2.19.1, 3.2.19.2, 3.2.19.4, and 3.2.20.1. Compliance with these requirements shall be demonstrated in accordance with Par. 6.3.2.2.

6.3.1.3 Malfunction Definitions
The reliability plan prepared by GE shall include specific definitions of malfunction. Definitions shall be related to one or more of the characteristics of Table VIII as well as to the appropriate portions of Sec. 3.0.

6.3.2 Quality Assurance Provisions

6.3.2.1 Numerical Demonstration
Achievement of each parameter listed in Par. 6.3.1.1 shall be demonstrated as specified below. This requirement is not to be construed as requiring statistical reliability tests; however, it shall be construed to require statistical evaluation of data for this purpose.

a. A curve will be established for each parameter shown in Table I related to total engine hours.

b. For items Par. 6.3.1.1 (a) through (e), time/cycle and failure data will be logged from in-plant tests and flight tests. This data will be analyzed on a periodic sliding basis of not more than 200 total engine hour increments or some other grouping as may be agreed upon. For each increment of engine time, incremental and cumulative statistical estimates of each parameter will be established and compared to the initial growth curves to determine satisfactory progress.

c. Attainment of the reliability objectives shall be construed to exist when the following conditions have been fulfilled.

(1) Using the total cumulative relevant data existing at the end of the 100 hour flight test program, corrected for approved design changes, show by analysis that the early flight goals have been achieved.

(2) The cumulative relevant test results, extrapolated by analysis, show that the intermediate and maximum experience goals are achievable.

d. Compliance with Par. 6.3.1.1 (e) will be demonstrated during the type certification program.

6.3.2.2 Failure Requirements Demonstration
Evidence of compliance with the provisions of Par. 6.3.1.2 shall be provided as follows:

a. Each part of the GE furnished equipment shall be analyzed to determine the end result of failure and ensure that adequate protection exists. The analysis shall include at least the data shown in the sample Failure Mode, Effect and Criticality Analysis format, Fig. 18. The analysis shall show conclusive evidence of compliance with the following minimum requirements:

(1) Single failure of accessory seals, bearing seals, and oil lines (except engine bearing failure) cannot result in bleed air contamination.

(2) No single failure of any part of the reverser can result in unsafe operation of the engine or the airplane.

FAILURE/ERROR MODE, EFFECT AND C

ITEM IDENTIFICATION			ITEM FUNCTION	PHASE OF OPERATION	TYPE OF FAILURE OR ERROR	DETECTION METHODS	POSSIBLE CAUSES	SECOND/ FAILUR
NAME	LOCATION	IDENT NO.						

PHASE OF OPERATION CODE:

1. PREPARE FOR FLIGHT
2. START/TAXI
3. TAKEOFF
4. CLIMB
5. SUBSONIC CRUISE
6. SUPERSONIC CRUISE
7. DESCENT
8. APPROACH AND LANDING
9. TAXI PARK
10. GROUND OPERATIONS

HAZARD CRITICALITY CODE:

A. CATASTROPHIC – PERSONNEL ERROR, DESIGN DEFICIENCY OR SUBSYSTEM/COMPONENT MALFUNCTION WILL PRODUCE SEVERE DEGRADATION OF THE SYSTEM WHICH WILL RESULT IN LOSS OF THE SYSTEM OR DEATH, OR MULTIPLE DEATHS, OR INJURIES.

B CRITICAL – PERSONNEL ERROR, DESIGN DEFICIENCY OR SUB-SYSTEM/COMPONENT MALFUNCTION WILL DEGRADE THE SYSTEM CAUSING PERSONNEL INJURY, SUBSTANTIAL SYSTEM DAMAGE OR RESULT IN AN UNACCEPTABLE HAZARD NECESSITATING IMMEDIATE CORRECTIVE ACTION FOR PERSONNEL AND SYSTEM SURVIVAL.

C. MARGINAL – PERSONNEL ERROR, DESIG SYSTEM/COMPONENT MALFUNCTION WIL SYSTEM TO SOME EXTENT WITHOUT MAJ OR PERSONNEL INJURY, BUT CAN BE AD ACTED OR CONTROLLED.

D. SAFE – PERSONNEL ERRORS, DESIGN DE SYSTEM COMPONENT MALFUNCTION WIL MAJOR SYSTEM DEGRADATION AND IT WI SYSTEM FUNCTIONAL DAMAGE OR CONT HAZARD, OR PERSONNEL INJURY.

FECT AND CRITICALITY ANALYSIS SHEET

BLE ES	SECONDARY FAILURES	FAILURE EFFECTS ON			COMPENSATING PROVISIONS		CRITICAL CLASS.		FAILURE FREQ	COMMENTS AND RECOMMENDATIONS
		SUBSYSTEM OPERATION	FLIGHT PROFILE	FLIGHT CREW ACTIONS	FLIGHT OPERATIONS	GROUND OPERATIONS	HAZARD	DISPCH		

NEL ERROR, DESIGN DEFICIENCY OR SUB- MALFUNCTION WILL DEGRADE THE TENT WITHOUT MAJOR SYSTEM DAMAGE RY, BUT CAN BE ADEQUATELY COUNTER- LED.
ERRORS, DESIGN DEFICIENCY OR SUB- MALFUNCTION WILL NOT RESULT IN ADATION AND IT WILL NOT PRODUCE DAMAGE OR CONTRIBUTE TO SYSTEM NEL INJURY.

DISPATCH CRITICALITY CODE:

A. FAILURE OF THE ITEM RENDERS AIRPLANE UNSERVICEABLE.
B. FAILURE OF ITEM IMPOSES RESTRICTIONS ON AIRPLANE SERVICE (WEATHER, LOAD, RUNWAY LENGTH, ETC.)
C. FAILURE OF ITEM WILL NORMALLY NOT AFFECT DISPATCH.

SYSTEM DIVISION:
SUBDIVISION:
MODEL:
PREPARED BY:
DATE:

Figure 18. Failure Mode, Effect and Criticality Analysis

(3) No single failure within the supersonic inlet will prevent the engine from continuing to operate satisfactorily.

(4) Damage to the engine will not occur after surges due to either inlet distortion within the limits specified in Par. 3.2.1.9.3 or other causes.

(5) No single failure within the engine will prevent the supersonic inlet from operating satisfactorily.

(6) No damage to the engine shall result when the windmill brake is applied by the normal controls at any engine operating condition.

(7) In the event of windmill brake actuator failure, the brake will not fail to remain in the position occupied at the time of failure.

These analyses will be supplemented, as required, by appropriate stress and fatigue analyses as well as by deliberately induced or simulated malfunctions during the tests specified in Sec. 4.0. A summarized failure analysis including these elements shall be included in the model specification.

b. Any malfunctions occurring during the ground and flight test program shall not produce results contrary to these requirements.

6.3.3 Data Requirements

a. Reliability Program Plan
General Electric will submit to Boeing a preliminary copy of their Reliability Program Plan which will be submitted to the FAA. After coordination with Boeing for overall program compatibility and approved by the FAA, the plan shall become the standard by which the General Electric Reliability Program will be conducted.

Revisions to the plan shall be submitted to Boeing for information. Boeing approval is required if basic intent, direction, or Boeing interface is affected.

b. Technical Data
Copies of the following data shall be furnished to Boeing as specified below:

(1) Allocated reliability values and documented results of design reliability analyses and predictions kept up-to-date at intervals not to exceed six months. This data shall include details related to each component or part for each parameter specified in Par. 6.3.1.1 and shall include the pertinent data specified in Par. 6.5.4.3 AIDS, items a) and f). Sources and justification of reliability predictive data shall be included.

(2) Comprehensive analyses of each possible internal and external failure mode, its effect and its criticality, kept up-to-date at intervals not to exceed six months. These analyses shall be prepared to fulfill the requirements of Pars. 6.3.1.2 and 6.3.2.2.

(3) The list of reliability critical items kept up-to-date at intervals not to exceed six months.

NOTE: It is preferable that these items be assembled into one package and submitted at the same time.

(4) A detailed plan to achieve compliance with the provisions of Par. 6.3.2.1 shall be submitted 90 days after contract award for Boeing approval. This shall include individual definitions of success and failure amplifying the provisions of Par. 6.3.1.3 and complying with Par. 6.5.4.3 (a). A detailed set of relevant and nonrelevant failure classifications shall be included.

(5) Summarized records of engine time/cycle failure and maintenance histories.

(6) Failure and Analysis Reports as generated.

These items shall be included in the status reports identified below.

c. Reliability Status Reporting

During Phase III, GE shall prepare and submit to Boeing bi-monthly reports to provide a concise and accurate summary of Reliability Program status, technical status and significant problem areas. These may be included in or be derived from periodic reports submitted to the FAA. The report shall cover the following:

(1) Program Status: Sumarize status of each current task contained in the Reliability Program Plan. Reasons for any slides or schedule alteration shall be included, along with program for recovery.

(2) Technical Status: This part shall consist of reliability estimates for the overall system and each major segment or component thereof, and shall compare predicted reliability (or MTBF/MCBF) with allocated reliability during the period covered. Updated assessments shall be included at least quarterly. A summary of revised predictions, the reason for the change, and the impact of the change shall be included in this part of the report. The current status of and results of significant tests or demonstrations for reliability purposes shall also be contained in this section.

(3) Significant Reliability Problems: This part shall summarize significant reliability problems in the following format:

(a) Area of engine or accessories
(b) Brief statement of problem
(c) Proposed resolution
(d) Action agency
(e) Current status
(f) Reference correspondence or data
(g) Amplifying remarks
(h) Final reliability report

The reliability portion of GE's final report required by the FAA shall be provided to Boeing for coordination prior to submittal and shall include a complete accounting of the accomplishment of the Phase III Reliability Program including:

a. Summary of results achieved by the contracted reliability program.

b. Evidence of compliance with Pars. 6.3.2.1 and 6.3.2.2.

c. Status of equipment qualification program, including deviations accepted and their effect upon reliability.

d. Recommendations for continued maintenance of system reliability in the field.

e. Recommendations regarding additional reliability improvements.

6.4 SAFETY

6.4.1 General

This section defines the minimum System Safety program interface responsibilities of Boeing and GE necessary to provide effective working relationships and to assure total airplane System Safety consideration during development and test. To the maximum possible extent, the activity implied in these responsibilities will be performed as a part of each contractor's basic contract with the FAA and shall not require additional effort.

As Boeing is responsible for the overall safety of the prototype airplanes during Phase III of the program, and further, is required to establish and maintain an Integrated System Safety Plan, it follows that Boeing will establish the Safety Analysis techniques used to evaluate the integrated airplane. Within this framework, the responsibilities of each party are defined as follows:

6.4.2 Boeing System Safety Responsibilities

Boeing will prepare an Integrated System Safety Plan (ISSP) upon receipt of GE's Safety Plan. The ISSP will provide for coordination of the Safety Program and will include the following:

a. Guidance and requirements for the accomplishment of Fault Tree Analyses by GE.

b. Schedules for submittal of Fault Tree Analyses.

c. Method of integrating engine Fault Trees into the B-2707 system tree.

d. Provisions for Engine/Airframe safety program coordination meetings.

6.4.3 General Electric Responsibilities

a. General Electric will submit to Boeing a preliminary copy of their Safety Plan which will be submitted to the FAA. Subsequent Safety Plan revisions will be provided to Boeing at the time of their accomplishment.

b. Develop and provide to Boeing Fault Tree Analyses, using the format of the Integrated System Safety Plan, for all undesired events that have a serious threat to the operation of the B-2707. These undesired events shall include but not be limited to the following:

(1) Uncontained engine fire

(2) Turbine disc failure

(3) Compressor disc failure

(4) Loss of scheduled thrust

(5) Engine seizure

6.5 MAINTAINABILITY

6.5.1 General

This section contains the minimum elements to fulfill system maintainability responsibility and provide effective engine/airplane interface. To the maximum possible extent, these requirements shall be fulfilled as part of the basic contract with the FAA and shall not require additional or different effort.

6.5.2 Design Objectives

6.5.2.1 Maintainability Objectives

When operated within the environments and performance limits specified in Sec. 3.0 of this document, the engine Maintainability objectives are those arithmetic mean values shown in Table IX.

Table IX. Maintainability Objectives

	End of Phase III	Mature Engine-2×10^6 Engine Flight Hr
a. MMH/EH (maintenance man-hours per 1,000 engine hours) (1)	1	1
b. Equivalent TBO (time between overhaul)	1	1

(1) Maintenance manhours including servicing, inspection and LRU replacement per 1,000 engine hours of operation on the airplane excluding access and remove and replace of the complete engine.

1 To be added prior to start of Phase III

6.5.2.2 Degree of attainment of these objectives shall be demonstrated in accordance with Par. 6.5.3.

6.5.3 Validation

General Electric shall submit maintainability analyses to establish and verify quantitative requirements and provide for continued evaluation of GE proposed design. A preliminary analysis will be submitted with the Maintainability Program Plan. This analysis will be updated and resubmitted at intervals not to exceed six months. The maintainability analysis shall be made, excluding limitations of the airframe installation, and shall consist of at least the following items:

a. For each line replaceable unit (LRU) installed on the engine and including the total engine as an LRU:

(1) Identification of the LRU.

(2) A list of scheduled and unscheduled maintenance, and servicing tasks required to keep the LRU in operable condition while installed on the aircraft.

(3) A list of tools, ground support equipment, and facilities required for the above tasks.

(4) The quantity and skill level of personnel to accomplish each discrete maintenance task listed (a.2.).

(5) The elapsed clock time in minutes to accomplish each maintenance task listed (a.2.) independent of that time required for access to the unit.

(6) Frequency of each maintenance action. (Failures per 1,000 engine hours or cycles as appropriate, and engine hours between scheduled actions.)

(7) Features incorporated in the design that will minimize maintenance, reduce servicing time, and facilitate maintenance.

(8) Identify inspection and servicing points which require quick access.

b. For each LRU, removed from the aircraft:

(1) The recommended repair level to be established (minor repair or overhaul).

(2) A list of maintenance tasks required to restore the unit to operating condition.

(3) A list of tools, equipment and facilities required to accomplish each discrete task.

(4) The quantity and skill level of personnel to accomplish each discrete task.

(5) The elapsed clock time, in minutes, to accomplish each discrete task.

(6) The frequency of each maintenance action.

c. The analyses shall include an operating time-oriented projection from zero operating hours to maturity for those requirements defined in Table 2. This prediction shall demonstrate a confidence of at least one standard deviation or better.

6.5.4 Data Requirements
The following data shall be provided to Boeing in the form and in accordance with the schedule specified.

6.5.4.1 Maintainability Program Plan
General Electric shall submit a copy of their preliminary maintainability program plan submitted to the FAA in accordance with the RFP. After coordination with Boeing and the FAA for overall program compatibility and approval by the FAA, the plan shall become the standard by which the General Electric maintainability program shall be conducted. Revisions to the plan shall be submitted to Boeing for information. Boeing approval is required if basic intent, direction or interface is affected.

6.5.4.2 Maintainability Progress Report
Reports shall be submitted at least bi-monthly through completion of Phase III. These may be included in periodic reports submitted to Boeing for other purposes, and shall include as a minimum an accounting of the progress of each task item as specified by the contract or defined by the program plan. The bi-monthly reports shall include:

a. Results achieved to date

b. Problems encountered and action taken or planned.

The maintainability portion of GE's final report required by the FAA shall be provided to Boeing for coordination prior to submittal and shall include a complete accounting of the Phase III Maintainability Program.

6.5.4.3 AIDS Interface Data
The B-2707 airplane will incorporate as an airline option an Airborne Integrated Data System (AIDS). This system is intended to provide proper controls and methods of measuring deterioration to permit maximum extension of TBO's. This system will receive data from, and monitor the operational condition of selected airplane equipment and to detect and identify actual or potential failures down to a line replaceable unit (LRU) level. The engine shall be included as a candidate for monitoring by AIDS.

Selection of engine and engine components to be monitored will be based on the potential maintenance savings, reduction of unscheduled maintenance, and increased utilization. To design the AIDS, it is necessary to identify failure modes of LRU's and means to detect or predict these failures and/or LRU

degradation. The data requirements specified below will be used to identify or verify AIDS requirements and performance. Data required in compliance with the Reliability provisions contained herein shall be used whenever possible.

General Electric shall furnish:

a. An "out of tolerance" failure criteria for each mode of failure which appears desirable to monitor by AIDS as identified in the GE failure mode and effect analysis.

b. The measurement accuracies, recommended sampling rate, and sampling period based upon intended use of equipment for those performance parameters which must be monitored to detect the failure of an LRU and/or equipment unit. This shall include a definition of all required ancillary environmental parameters such as OAT, airplane velocity and altitude which must be derived from sources exterior to the equipments being monitored.

c. The measurement accuracies and recommended sampling rates and sampling periods to predict failure trends of an LRU and/or equipment unit. Selected sensing will be augmented by a substantiating analysis which will indicate the degree of success anticipated in predicting failures.

d. The recommended analytical logic to be used in fault detection, isolation and prediction down to the LRU level for (b) and (c) above which will satisfy the logic requirements.

e. Recommendations for location of pickup points and sensors for measuring those parameters of item (d) which must or can most conveniently be measured within the engine and engine accessories. For those selected parameters, GE will furnish suitable sensors with the engines. Where a suitable sensor is not available, recommend a plan for its development.

f. Pertinent information relating to failure rate rapidity and/or a time history of failure substantiating (b) and (c) recommendations. The data measurements sampling rates and processing for failure trending will in large measure be determined by the time history of failure.

g. All available AIDS data relating to (a) through (f) above shall be submitted to Boeing prior to end of Phase III. As additional data is developed in response to (a) through (f), it shall be submitted in bi-monthly progress reports starting 30 days after contract award. A final study report containing all recommendations and inclusions in response to Par. 6.5.4.3 (a) through (f) will be submitted to Boeing prior to the end of the Phase III program.