UNCLASSIFIED

AD NUMBER
AD373936
CLASSIFICATION CHANGES
TO: unclassified
FROM: confidential
LIMITATION CHANGES
TO: Approved for public release, distribution unlimited
FROM: No Foreign
AUTHORITY
OCA; IAW markings on document, Jul 78; PA/ARDEC notice, 22 May 96

THIS PAGE IS UNCLASSIFIED

373936

CONFIDENTIAL

AD

COPY NO.

TECHNICAL REPORT 3407

IN-PROCESS REVIEW OF THE ADVANCE PRODUCTION ENGINEERING PROGRAM FOR THE 105 MM XM494 APERS CARTRIDGE (U)

VINCENT J. DONADIO
WILLIAM R. KELTING

DDC
RECEIVED
JUL 20 1966
D

JULY 1966

AD No.
DDC FILE COPY

PICATINNY ARSENAL
DOVER, NEW JERSEY

This document contains information affecting the national defense of the United States within the meaning of the Espionage Laws, Title 18, U. S. C., Sections 793 and 794. The transmission or the revelation of its contents in any manner to an unauthorized person is prohibited by law.

DOWNGRADED AT 3 YEAR INTERVALS;
DECLASSIFIED AFTER 12 YEARS.

CONFIDENTIAL

ACCESSION for
CFSTI WHITE SECTION
DDC BUFF SECTION
UNANNOUNCED
JUSTIFICATION
BY
DISTRIBUTION/AVAILABILITY CODES
DIST. AVAIL. and/or SPECIAL
9

The findings in this report are not to be construed as an official Department of the Army position, unless so designated by other authorized documents.

DISPOSITION

When this report is no longer needed, Department of the Army organizations will destroy it in accordance with the procedures given in AR 380-5. Navy and Air Force elements will destroy it in accordance with applicable directives. Department of Defense contractors will destroy the report according to the requirements of Section 14 of the Industrial Security Manual for Safeguarding Classified Information. All others will return the report to Technical Information Section (VA6), Picatinny Arsenal, Dover, New Jersey.

DDC AVAILABILITY NOTICE

Qualified requesters may obtain copies of this report from DDC.

CONFIDENTIAL

(9) TECHNICAL REP[redacted]RT, [redacted]

(6)
IN-PROCESS REVIEW
OF THE
ADVANCE PRODUCTION ENGINEERING PROGRAM
FOR THE
105MM XM494 APERS CARTRIDGE (U), (8)

~~BY~~

(10) VINCENT J. DONADIO
WILLIAM R. KELTING.

(11) JUL[redacted]966,

(12) 42p.

AMMUNITION ENGINEERING DIRECTORATE
PICATINNY ARSENAL
DOVER, NEW JERSEY

(18) PA (19) TR-3407

DOWNGRADED AT 3 YEAR INTERVALS
DECLASSIFIED AFTER 12 YEARS

1473
eof

CONFIDENTIAL

028 450

TABLE OF CONTENTS

Section	Page
SUMMARY	1
RECOMMENDATIONS	1
BACKGROUND	3
ADVANCE PRODUCTION ENGINEERING OF 105MM XM603 APERS PROJECTILE	5
ADVANCE PRODUCTION ENGINEERING OF XM571 MT FUZE	
Introduction	11
Production Areas of Investigation	12
Body	13
Housing	14
Lug	15
Slider Safety	15
Timing Disc Supports	16
Head, Lower Cap and Housing	16
Sintered Metals and Die Cast Processes	16
Replacement of Alpha Weight System with a Setback Pin System	17
Design Improvement to Engaging Segment and Body	18
APPENDIX	
A. Figures	19
TABLE OF DISTRIBUTION	39
ABSTRACT DATA	41

(U) SUMMARY

Advance production engineering (PE) of the 105mm XM494 Cartridge, used in the M60 Tank, although not completed, resulted in significant accomplishments -- in substantial cost savings and higher production rates for the same capital expenditures. Development of prototype manufacturing machinery to be developed for this program was partially completed and the feasibility of the advocated approach proven.

A program to investigate projectile production problem areas was formalized and will be pursued. This part of the program was previously suspended pending development of a projectile which would meet all the User's requirements for this ammunition. This requirement has now been satisfied and test rounds for Engineering Tests and Service Tests (ET/ST) are being fabricated.

Completion of the Advance Production Engineering Program and the availability of a competitive Technical Data Package (TDP) are still scheduled to be accomplished concurrent with the Type Classification date.

(U) RECOMMENDATIONS

The XM494 Cartridge program resulted in a substantial technological breakthrough which will result not only in cost savings, but will increase the producibility of the XM494 Cartridge and reduce delays and slippages to a minimum during production.

The net results cannot fully be assessed until the program is completed. Areas being investigated -- such as the improved flechette manufacturing machine -- will result in tremendous cost savings in capital equipment and in production cost. In addition, there will be benefits from the production investigation of the various costly components of the projectile and fuze since the bulk of the costs to produce the XM494 Cartridge are in the heavy pieces of hardware that make up the shell body and inner structural components.

The completion of this program should be accomplished before this item goes into mass production.

Previous page was blank, therefore not filmed.

(C) BACKGROUND

The original XM494 Cartridge consisted of utilizing the howitzer-designed projectile (containing about 9,200 8-Grain Flechettes), the T369 Mechanical Timer (MT) Fuze and the standard 105mm Tank Gun Cartridge Case and propellant ignition system. This cartridge was designated the XM494E1.

The XM380E1 Projectile was then being developed for firing in the 105mm M103 Howitzer system and would require a short development schedule. This schedule would enable the developing agency to provide the M60 Tank Weapon System with an anti-personnel (APERS) munition in minimal time. The XM494 Cartridge completed ET/ST in May 1964. This cartridge was considered satisfactory for utilization as a canister type projectile for muzzle action. However, the difficulties in attempting to set the T369 Fuze (which is calibrated in one-second increments) with a fuze-setting wrench for firing at targets beyond the muzzle action range preclude using this type fuze effectively in tank operations. To overcome this difficulty, a hand-settable fuze would be required. In addition, the XM494 Cartridge's overall length of 43 inches made the round difficult to stow and load within the restricted confines of the M60 Tank.

A revised small development requirement (SDR) was prepared in June 1964 for the 105mm XM494E2 Cartridge with improved characteristics to correct the deficiencies. This development of a variable range fuze graduated in 200-meter increments (rather than tire increments) began from zero (muzzle action) to 4,400 meters with a capability of being rapidly indexed by hand without the use of a fuze wrench. This fuze was designated the XM571 MT Fuze. The cartridge's maximum overall length was reduced from 43 to 40 inches to facilitate the ease of loading and storage in either the M60 or the M60A1 Tank's storage racks.

In addition to its primary capability against personnel, the XM494E2 is expected to provide capability for defeating low-flying slow-moving aircraft. This desired capability against aircraft necessitated a re-evaluation of the optimum flechette weight and configuration for defeat of both personnel and materiel targets.

During development of the XM494E2 Cartridge, results of studies indicated that a newly designed 13-Grain Flechette with a low drag nose shape was optimum for both the APERS and anti-aircraft characteristics desired by the SDR. It also was found that an increase in muzzle velocity would add to the projectile's terminal effectiveness. To incorporate these characteristics, development of the XM494E2 Cartridge was authorized in July 1965. This round contains 5,200 13-Grain Flechettes and is launched at a muzzle velocity of 3,000 fps. Since the subprojectiles (flechettes) derive their effectiveness from the square of the velocity (MV^2) the increase in projectile effectiveness is substantial.

Previous page was blank, therefore not filmed.

(C) ADVANCE PRODUCTION ENGINEERING OF 105MM XM603 APERS PROJECTILE (U)

PE Contract DA-28-017-AMC-2376(A) was awarded 23 February 1966 to Whirlpool Corporation of Evansville, Indiana by Picatinny Arsenal for an extensive study of the XM603 Projectile for the XM494E2 Cartridge. This study was to encompass a production evaluation of the complete round which would result in redesign and changing production methods or processes as necessary. This study was to result in a complete TDP suitable for competitive procurement. To support this study the contractor was to fabricate bench type equipment showing the feasibility of manufacturing and loading flechettes for the XM603 Projectile. The PE TDP will be supported by testing XM494E2 Cartridges by the contractor during the early redesign phase of this study. The contractor will fabricate an additional 200 XM494E2 Cartridges for testing by Picatinny Arsenal at the completion of this contract. These projectiles will be manufactured using the bench equipment and load flechettes and the processes represent that which would be needed for a production facility. To date, these areas of investigation are underway or planned:

Special Equipment -- The key to the ultimate production of the XM494 Cartridge is in the ability to manufacture, process and load the 13-Grain Flechette. Two pieces of equipment are under development to determine the feasibility of high speed manufacturing and loading.

Four-Wheel Flechette Machine -- A four-wheel flechette machine was designed and run for a limited time under Contract DA-28-017-AMC-1007(A). Under this contract it was proven that the 8-Grain Flechette could be formed by the embossing principle employed on the four-wheel machine.

The machine is basically composed of four wheels mounted at right angles. Each wheel has 32 dies mounted along the circumference. Each wheel is mounted on a stub shaft, aligned with the mating wheels and each is driven from a common power source through precision bevel gears (Figure 1).

Dies were designed and developed on this machine which will produce an acceptable nail point 8-Grain Flechette. These dies are mounted to the wheels in such a manner that will allow for them to be adjusted to control fin area and fin diameter of the flechette (Figure 2). Flechettes were produced on this machine at a rate of 4,000 parts per minute. The ultimate rate of this machine may be greater than 4,000 per minute when the final design is completed.

Under Contract DA-828-017-AMC-2376(A) this basic machine was redesigned. The wheel diameters were changed to permit re-spacing of the flechette dies to form the longer 13-Grain Flechette and to provide for an improved method of keying the forming wheels to the drive shaft. Work will begin shortly to fabricate a new die block, wheels and dies for the 13-Grain Flechette prototype machine. Material for the flechette was received at Picatinny Arsenal.

Flechette-Loading Machine -- To process flechettes rapidly into loaded bay assemblies, a special loading machine was developed under this contract (Figure 3). Actual photographs of prototype machines which will utilize a geared thread synchronizer rather than a cam synchronizer are in Figures 4-6. This machine weaves the flechette into a threaded belt "bandolier" style which facilitates loading into bay assemblies. The flechettes are alternately positioned nose-to-tail in the belt using 0.006-inch-diameter nylon thread. Tests indicated that the greatest packing density of flechettes can be obtained using the woven belt. Dynamic testing proved that weaving the flechette does not affect the distribution of the payload when the round functions.

The weaving machine is operated by placing flechettes in two vibrator bowls which feed flechettes into two tracks. The flechettes are oriented and held by the fins as they progress down the tracks. The weaving process takes place between two counter rotating wheels. As each wheel passes under a track it picks up a flechette and transports it to the center of the wheel where it is deposited into the belt assembly. Since the tracks are opposed, the flechette on each wheel has a different nose or tail orientation. The wheels are geared so that the flechettes are deposited into the weaver alternately nose-to-tail. Four threads are fed past the flechette and automatically shuttled after each flechette is deposited to complete the weaving operation.

A prototype machine capable of weaving both 8- and 13-Grain Flechettes was designed and fabricated. It was run at rates up to 1,500 parts per minute using 8-Grain Flechettes. Minor modifications to the feeder track will be required before 13-Grain Flechettes can be produced.

The cost of this machine is about $10,000 compared to $20,000 for the R&D reciprocating type machine. At an increased production rate of about seven times more the net result for a given facility fund is a production increase of 14 times more. This machine represents a major technological breakthrough without which production would be virtually impossible.

Production Areas of Investigation -- To simplify the XM603 Projectile these areas are being considered:

Bases -- The projectile base is presently machined from 4140 steel bar stock. The material must be heat-treated prior to final machining since some deformation is usually experienced. A 4140 steel forging was used in the R&D investigations of this projectile but Chamberlain Corporation of Burlington, Iowa, the forging vendor, considers this design impractical to forge from 4140 and has experienced up to 25% scrap due to material defects. About 30% of the cost of the round is in the base when manufactured by model shop methods. These areas have been or will be investigated to simplify the base machining.

The base was redesigned using C1041 steel instead of 4140 steel. Ten projectiles were manufactured with bases machined from forged C1041 steel. These projectiles were test fired at excess pressure + 140°F and -65°F. Test results were not yet fully assessed; however, preliminary indications are that the C1041 steel is an acceptable material for this design application. In addition the C1041 steel is more easily forged and less expensive than 4140 steel (Figure 7).

An investigation also will be made of the 1140 series steel to determine if they are applicable to the base design. This steel should offer greater machineability from C1041 or 4140.

A contract also was let with vendors to determine if the base can be semi-finished on high energy rate forming equipment. Replies from the industry indicate that the high energy formed parts do not offer substantial savings over conventionally forged parts.

Front Body -- The present front body design is fabricated from 7075 T6 aluminum tubing or bar stock rolled or extruded. Since function of the round depends on the body fracturing longitudinally when the detonators are fired, the grain structure of the aluminum will affect round performance. The grain structure present in rolled or extruded aluminum allows this action. No tests were conducted on forged or impact extruded body sections to determine if that grain structure is suitable.

The contractor communicated with various aluminum fabricators to furnish either back forged or impact extruded front body forgings (Figure 8). These parts will be machined and dynamically tested to determine if satisfactory functioning can be obtained.

Keying System -- It is necessary that the payload structure be keyed to the projectile so that the payload reaches the same spin rate as the projectile. If full spin is not reached it will affect the stability of the round as well as the distribution of the flechettes. Various methods were utilized to key the payload to the round -- usually machining of tabs,, slots, etc. is required. The present R&D design uses machined keyways on the outer spacers and die formed tabs on the supports. To simplify this design a new keying system is under evaluation (Figure 9 and 10).

The new keying system under consideration would have no machining or forming on the outer spacer for keying. A gear tooth type edge would be formed or rolled on the top and bottom edge of the support. In assembly the outer spacers would be compressed into the tooth arrangement of the supports. During angular acceleration the payload would be driven through the gear tooth arrangement of the payload stack.

This design would permit the manufacture of outer spacers from sheet stock by die forming or roll forming. Each outer spacer would be fabricated from two semi-circular pieces and taped together in assembly. This would eliminate all machining on the outer spacers which would be fabricated by a stamping process -- also eliminating costly milling of the tab grooves, lathe machining of diameters, etc.

Flash Tube -- The design uses interlocking inner spacers to form a flash tube. Consideration will be given to a one-piece tubing arrangement. Inner collars for each bay will be installed around the flash tube to provide the necessary structure to support the payload at setback. This would eliminate the need for the interlocking feature of the inner spacer and save machining time.

Flechette -- The flechette point will be intensively studied to determine if the present configuration is desirable for mass production. Various die designs will be considered and ultimate production estimated for both nail and four-wheel type embossing machines. All designs considered will be ballistically tested to determine aerodynamic coefficients and penetrability.

Cartridge Assembly -- The propellant used for the XM494 Cartridge will be re-evaluated. Presently 0.052-inch web M30 Propellant is used at a rated pressure of 47,000 psi. It is anticipated that if the propellant is changed to 0.073-inch web M30 Propellant the pressure could be reduced to 42,500 psi while still maintaining the rated muzzle velocity of 3,000 fps. This reduction in pressure would result in a

corresponding reduction in stress throughout the round and possibly reduce some engraving of the base behind the rotating band which is now being experienced. This change also should allow reducing the number of rotating bands required from three to two.

Technical Data Package -- The results of the PE versions will be incorporated in a TDP. As a result of this Advanced PE Program a preliminary TDP including drawings, specifications, inspection equipment lists etc. will be available for procurement.

Previous page was blank, therefore not filmed.

(C) ADVANCE PRODUCTION ENGINEERING OF XM571 MT FUZE (U)

(U) Introduction

A program was assigned Frankford Arsenal during October 1964 for performance of Advance Production Engineering to be coordinated with the development program being pursued by Picatinny Arsenal. The purpose of the combined effort during development was to result in establishment of a TDP which would be suitable for eventual high volume procurement.

In the embryonic stages of PE, various design improvement ideas were offered to R&D. Some of these ideas were adopted; however, due to advanced progress of development designs it was not possible to incorporate all into the basic design.

As the PE studies progressed a requirement was issued for a fuze similar to the XM571 Fuze but for performance under a much softer firing environment. As a result of favorable testing of modified XM571 Fuze units, requirements for the similar fuze were interjected into the XM571 Fuze program. This fuze is identified as the XM592 Fuze and has about 80% of its parts common with the XM571 Fuze. Since the program now involves two similar fuzes, the information will be substantially applicable to both in addition to being applicable, in part, to all fuzes incorporating muzzle action features. The activity generated by this program would in part also result in benefit for design and manufacture of many other existing artillery MT fuzes. However, the major points will apply to the XM571 Fuze and XM592 Fuze.

The XM571 Fuze is developed for use with the 105mm XM494 APERS Cartridge using the M68 Tank Gun Weapon. The XM592 Fuze is developed for use with the 106mm XM581 APERS Cartridge using the 106mm Recoilless Rifle. The individual fuze design characteristics relate to the differences of firing environments in end use.

To fully understand this particular type fuze it should be explained that they are hand-settable for function at discrete pre-set distances corresponding to a time period from zero (muzzle action) to 10 seconds. Markings of settings are for range in meters. Major operating features are the muzzle action mechanism, 10-second timer and safety interlocks. The outside configuration of the fuze is essentially the same as fuzes used with other artillery ammunition except that this muzzle action fuze incorporates a 1.9-inch thread instead of the standard 2-inch thread. This difference makes it impossible to attach the XM571 Fuze to projectiles other than for those rounds which it was intended. Figure 11 shows the XM571 Fuze and XM592 Fuze.

(U) Production Areas of Investigation

Based on examination of the R&D fuze designs, studies were made to plan the activity which would improve the basic design or manufacturing processes and to effect economies without altering safety, reliability or function.

Areas were found where specific individual multipiece parts could be combined as single piece parts. Various considerations were advanced for simplification of design and for ease of manufacture. Proved and advanced techniques of metal working were investigated. Since changes to basic design were to be limited or minor, the first major effort involved investigations of various manufacturing and assembly procedures. For the engineering development, testing and R&D User quantities, all parts were manufactured by conventional methods of machining -- turning, drilling, milling, etc. PE studies indicated that other or new and advanced techniques also should be investigated -- cold extrusion, spinning, forging, die cast, sintering, etc. The following activities will explain both manufacturing process investigations and design improvement changes detailing parts and areas affected:

Lower Cap -- This item is presently made of aluminum 2014 Condition T6 machined complete from bar stock. The amount of raw material required by the machining method is 2¼-inch-diameter x 2-9/16-inches-long or about 1 lb. per piece. The finished weight of the end item is about 0.195-lb. each.

Realizing that by machining about 3/4-lb. of raw material was wasted as cuttings, other methods utilizing forgings or cold extrusions were explored.

Experiments were conducted making use of the cold extrusion process. By using a starting band 2¼-inch-diameter by 5/8-inch-thick, weight (about 0.262-lb.) pre-formed cups were extruded having all inside dimensions to size. A minimum of machining to the outside was required to finish. Waste in cuttings was minimized to 0.067-lb. each.

Explorations also were made in hot forging aluminum (at 700°F) using the same size slug. This method had to make allowances for expansion, shrinkage and tool draft resulting in a blank, requiring machining both inside and outside. The process was considered an advancement; however, conclusions were that the cold extrusion process indicated even greater potential for economy.

Additional cold extrusion experimentation proved that aluminum 6151 T6 (a cheaper grade) when cold extruded also would provide the required physical characteristics. As a result of this effort, future savings are anticipated of about 80% in material and 70% in labor and tooling.

It is noted that action was taken to allow use of the alternate material and that recent production contractors of muzzle action fuzes quickly made use of the cold extruded slug for making the lower cap.

As of this date, the cost of 2014 aluminum T6 used is 70 cents per pound (the alternate material 6151, aluminum T6, is 65 cents per pound). For a raw material cost comparison the machining method uses raw material worth 70 cents while cold extrusion and hot forging method raw material is about 18 cents. The pre-form is supplied at a cost of 22 cents each which includes material and internal configuration shaped to size.

The labor and tooling to forge and machine finish the hot formed blank is as costly as costly as to completely machine from bar stock; therefore, raw material cost would be the only gain if hot forging process were utilized.

The labor and tooling required to finish machine the cold extruded blank is about 70% less than the original method of machining complete from bar stock (Figure 12).

(U) Body

The body is currently made of aluminum 7075 T6, Condition T6 and machined complete from bar stock. The amount of raw material required by the machining method is 2½-inch-diameter x 3-inches-long or about 1½ lb. per piece. The finished weight of the end item is about 0.372-lb. each.

Since about one full pound of raw material was wasted as cuttings, other methods utilizing forgings or cold extrusions were explored.

By using a starting slug 2½-inches-diameter x 7/8-inch-thick, (weight about 0.433-lb.), a cold double extrusion exhibited a configuration which would require minimum machining inside and out in addition to the necessary thread cutting. Waste in cuttings was minimized to 0.061-lb. each.

Regarding forgings, experiments were made using a heated (700°F) slug 2½-inches-diameter x 3/8-inch-thick (about 0.420-lb. each). Machining of the forged blank was slightly less than for the cold extrusion; however, due to tooling and time-consuming heat treatments conclusions were that the cold extrusion process offered greater potential for economy.

Continued cold extrusion experiments proved that aluminum 6151-T6 (cheaper grade) when cold extruded would provide the necessary physical requirements. As a result of this effort, future savings can be antitipated in the range of 70% in material and 45% in labor and tooling.

Action was taken to allow use of the alternate material for cold extrusion purposes. Now contractors manufacturing fuzes with this type body have incorporated use of the cold extruded body configuration.

For comparison, the cost of raw material alone for the machine complete method is about 95 cents per unit. Raw material cost for the forging or cold extrusion method is about 30 cents. The cold extruded pre-form is currently being procured by contractors for 49 cents each (Figure 13).

(U) Housing

The design of the housing causes this item to be difficult and expensive to fabricate with conventional tooling and equipment. Observations and analysis of this housing at Frankford Arsenal generated activity for investigation of other or advanced manufacturing techniques which could have potential for economy.

The housings are being manufactured by machining complete from bar stock. The raw material is stainless steel (free machining #416). Raw material requirements are 2-inches-diameter x 2-1/8-inches-long (about 1.88 lbs.) and is estimated to be about $1.05 of the total item cost. The housings as machined for the development fuzes cost $18.50 each and request for quotation for 50,000 quantity indicated a future minimum cost of $12.50 each.

With this background, investigating the use of the spin-extrude process (flow turn) was performed. Using limited tooling, the feasibility of developing a housing configuration from a pre-formed blank was successfully demonstrated using stainless steel 325 and 304 because the stainless steel 416 is not applicable to plastic forming. The part worked by spin-extrusion incorporated the internal ring of 108 teeth, providing all inside, outside and wall thickness dimensions to size. The spin-extrude method required 23 seconds to form the 108 teeth as against 12 hours (per unit) by the machine method. To complete the extruded part required only minimum machining to finish flange and drill and thread required holes.

The spin-extrude method requires about 75% less raw material and reduces machining more than 80%. The less than half-pound of raw material required is estimated to cost 26 cents. The complete sequence of operation is being methodized and evaluated for incorporation as a requirement in production. The total cost of the end item housing -- when produced using the spin-extrude process -- is estimated to be about 94 cents. Figure 14 illustrates material comparison and step procedure necessary for spin-extrude process.

Also, for this particular housing an alternate investigation phase is being conducted for possible use of aluminum 7075-T6 for this part. Analysis indicates that this type material when spin-extruded can provide equivalent physical characteristics. Addition of an anodizing process is expected to react as partial case hardening, especially for the teeth area.

(U) Lug

Redesigned samples were made simulating manufacture by a blanking die in one operation. This finalized design eliminates all machining, milling and drilling as required on the original piece part design. The new lug is a straight piece staked into the side of the mainspring housing; therefore, other gains are made such as:

Elimination of the two counter-bored holes in the lug.

Elimination of the two threaded holes in the mainspring housing.

Eliminating of two screws.

Milling for the slot in the side of the mainspring housing is minimized.

Savings are realized in both item fabrication and assembly. MIL-Standard and ballistic tests proved this design successful. It is already incorporated into the PE design. Figure 15 illustrates the original design through to finalized design.

(U) Slider Safety

Because this particular part was difficult and costly to manufacture, various considerations were made. After thorough study it was concluded that the safety action performed by this item was redundant to the action of the centrifugal weights and only performed as an arbor stop. Consultation with R&D and development engineers quickly resulted in eliminating of the safety slider and spring and replacement was made with a simplified arbor stop bar staked into a slot in the mainspring housing. Further PE resulted in affecting a pre-located arbor stop pin which is simplified to the extent of being a shouldered pin pressed into a counterbored hole in Plate 7. Related improvements to the collar design were automatically made in conjunction with arbor stop improvements. Figure 16 illustrates original designs of safety slider, arbor collar and finalized arbor stop and collar improvements.

(U) Timing Disc Supports

For this part the present design utilized three pieces spot welded together. This involves blanking and forming the main section plus blanking the segments which are later welded. Upon study, a redesigned one-piece design was created and samples were made simulating manufacture by a three-stage progressive die. Air gun tests of the new design revealed possibility of success; however, further refinement of design is necessary. Figure 17 illustrates the present design and the proposed design.

(U) Head, Lower Cap and Housing

In an attempt to simplify and effect economy in this area, designs were created to demonstrate fastening of the head without the use of threads either on the head or in the bell housing. The design took into consideration the depth of the O-ring groove in the head and the thickness plus tolerance of the O-ring. A sample assembly of this arrangement was made and is available for examination and comment. To make the sample assembly it was necessary to make a head and bell housing without threads. Calculations were then made in consideration of the average compression values and tolerances for the involved O-ring. After allowances were made for the O-ring groove and predicted O-ring compression relative holes were drilled at this level through the lower cap, housing and head to allow insertion of a 1/16-inch-diameter x 1-9/16-inch-long "spirol" pin. The related holes in the lower cap were made to be clearance holes since compression at assembly would normally make close tolerances in this part impossible. These holes (each side) would later be filled with glyptol at final assembly. The spirol pins used were heavy duty made of work hardened nickel stainless steel 302 and rolled to 2¼ turns. It is compressive and has a minimum of two material thicknesses through the circumference. The cross-section minimum shear strength of the spirol pin at any point is 450 lbs. In assembly, since the pin is inserted to have two pressure area contacts the shear strength is equal to 900 lbs. each. Also in assembly the pin is inserted to be equally balanced over the spin axis of the fuze. The spirol pin being equally balanced over the spin axis and under its own compressive forces, plus additional O-ring compressive forces imparted by assembly, will withstand effects of any combination of setback and high spin forces generated by ballistic firing. Figure 18 shows sample assembly. Sketch presents principle of concept.

(U) Sintered Metals and Die Cast Processes

No activity has yet been initiated for acquiring sintered sample parts. However, for two parts -- the main spring housing and the Plate 7 -- experiments and testing were performed using aluminum die cast material. These aluminum die cast plates proved capable of withstanding the forces

of air gun and ballistic testing; however, in a 40-foot drop test the plates fractured and broke. Examination of one fuze after drop test exhibited a fractured mainspring housing in the firing pin support area; if the item had been loaded it probably would have detonated. It was decided to remain with the more malleable brass until another type material could be explored.

(U) Replacement of Alpha Weight System with a Setback Pin System

The parts and construction involved in the alpha weight system were found to be difficult to manufacture and therefore costly. For simplification and economy Frankford Arsenal explored every possible improvement to this area.

The alpha weights perform the function of locking the centrifugal weights (muzzle action feature) under all conditions except the combination of forces (setback and angular acceleration) generated by ballistic firing. The alpha weights seat into a slot in the mainspring housing are spring-loaded upward and are retained by matching slots in Plate 7. During manufacture of the development fuzes it was noted that the alpha weights, mainspring housing and Plate 7 represented an estimated cost of over $40 per unit if produced under mass production. Cost of the alpha weight in 200,000 quantity was $1.51 and four are contained in each fuze. The mainspring housing and Plate 7 represented about $18 each. The high cost is due to the requirement of four each, 14° square end slots with critical tolerance and finishes in both the mainspring housing and Plate 7.

After air gun testing of the development fuze, examination at Frankford Arsenal revealed that the alpha weights were releasing in full from effects of setback alone and therefore spin effects were probably minimal. Conclusions were drawn that the same conditions must be inherent under ballistic conditions.

Two substitute designs were created:

A simplified setback pin system.
Setback linkage spin delay system.

Efforts were first normally directed to the most simple design which consisted merely of spring-loaded setback pins. The setback pin system would require only pre-located straight and counterbored holes in both the mainspring housing and Plate 7. By accelerating the program the desk study and three models were completed within six weeks. The three models successfully passed air gun tests, 40-foot drop test and ballistic testing. These three models were disassembled and rebuilt prior to each test. Continuing with the program a quantity of 50 fuzes incorporating this setback pin system and many other improvements were produced. Twenty

complete and loaded fuzes are undergoing shop testing. Thirty complete and loaded fuzes are awaiting projectiles for ballistic test. If tests prove successful, incorporation of the setback pin system and other improvements will considerably reduce the cost per item. Figure 19 illustrates comparison of alpha weight system and setback weight systems.

(U) Design Improvement to Engaging Segment and Body

For the plunger assembly (button hand-settable feature) in the development fuze, difficulties were encountered in machining a blind square hole in the body. Studies resulted in elimination of the square hole by substituting an easily machined slot. A redesign for the connecting engaging segment became necessary which resulted in ease of manufacture and assembly and was structurally stronger. Figure 20 illustrates the original body and engaging segment and the improved version. The new arrangement will undoubtedly lower cost in this area.

In the PE version there have been many improvements made such as:

Allowing greater tolerances
Radii in and on corners
Other variances to permit ease of manufacture

Another minor but successful change was incorporating a nylock pellet in the detonator screw. This method eliminates staking and will be advantageous for disarming after shop testing or for other examination.

There are many other phases of PE possibilities. Concentrated effort will be placed to continue the search for improvement and economy.

As a result of this advanced PE program a preliminary TDP was provided for the XM571 Fuze including drawings, specifications, inspection equipment lists, etc. In addition, drawings for a PE version of the XM571 Fuze (now identified as XM571E1) are being established.

APPENDIX

APPENDIX A

Figures

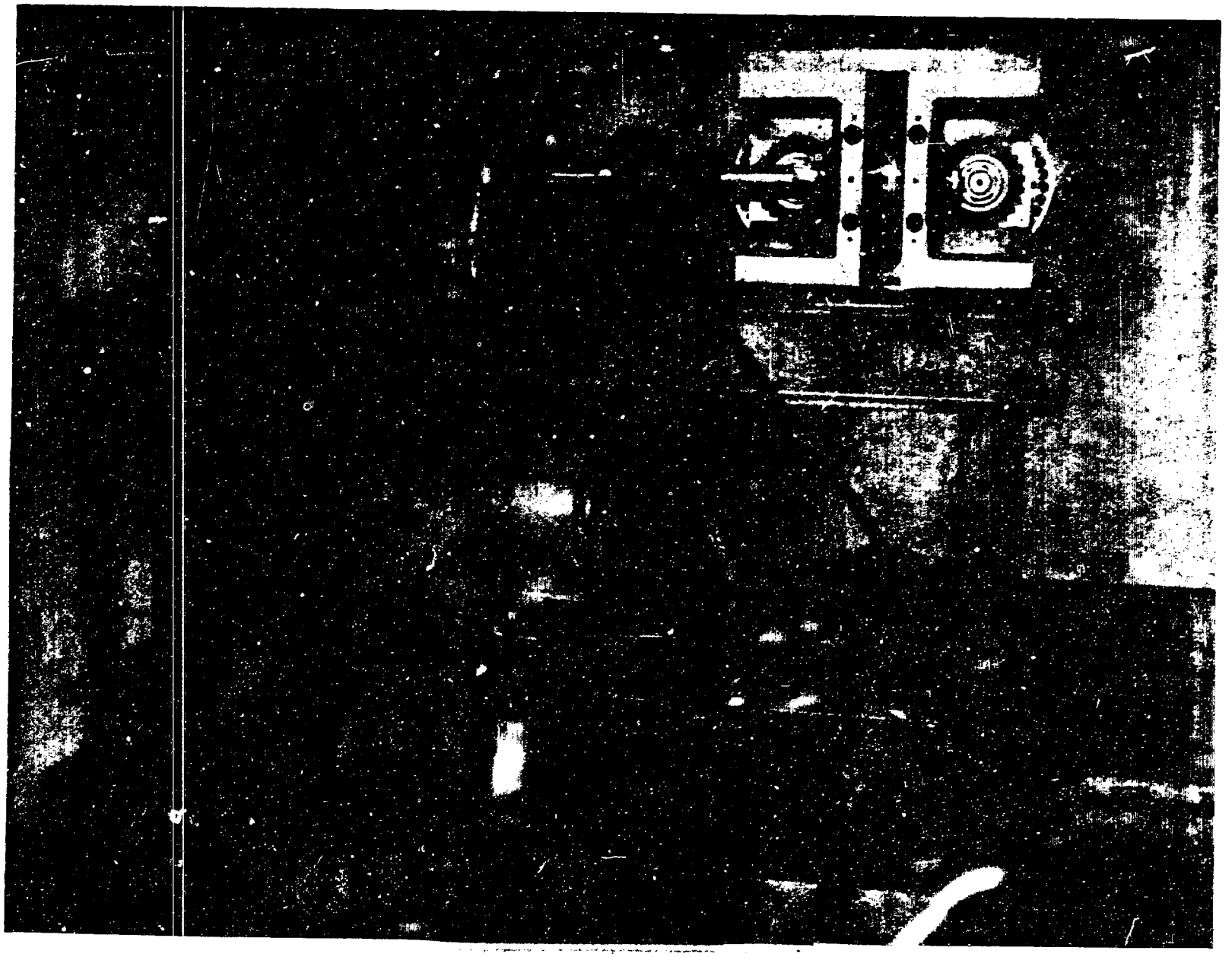

(U) FIGURE 1
COMPLETED MACHINE

(U) FIGURE 2

FRONT VIEW OF [illegible]

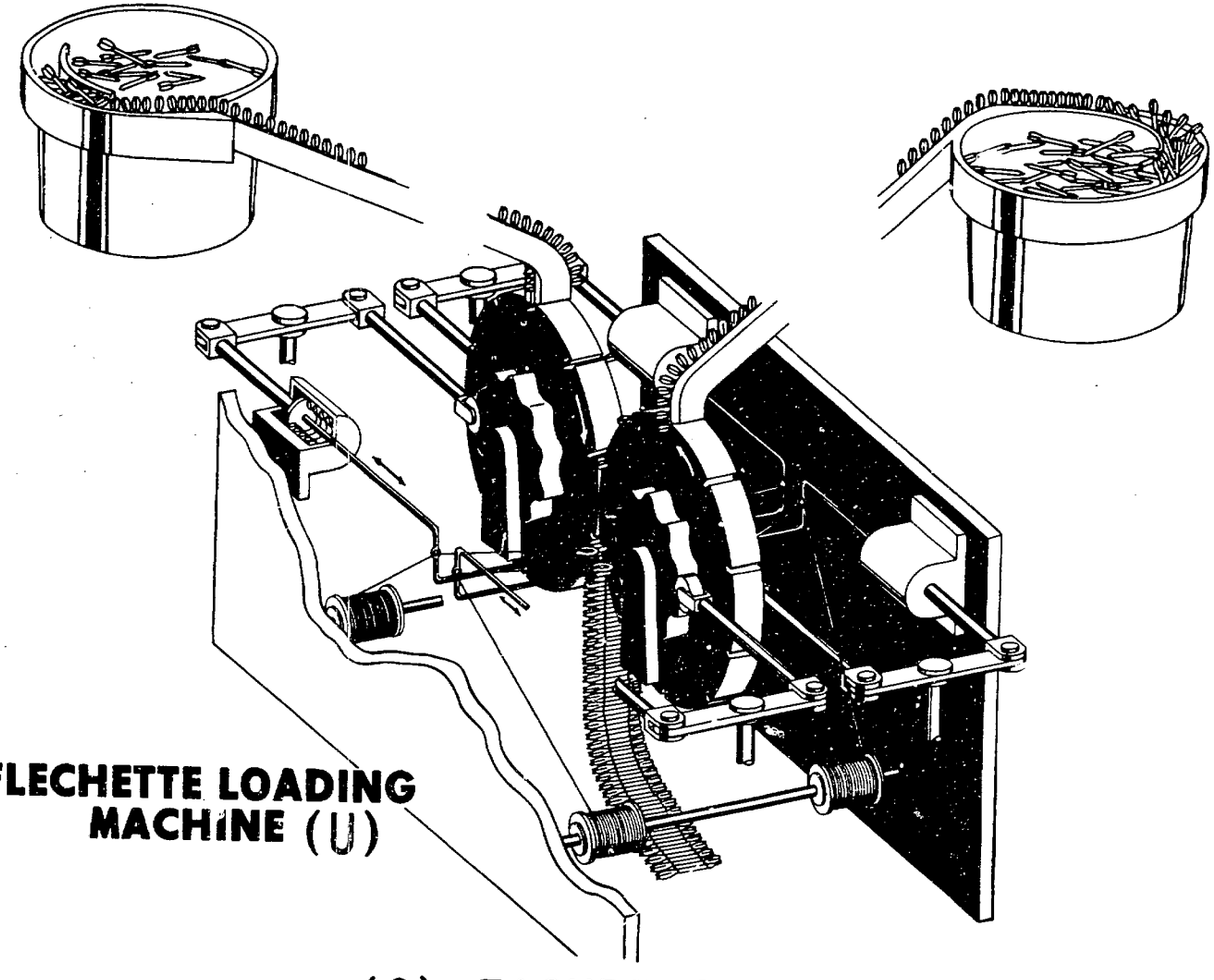

(C) FIGURE 3

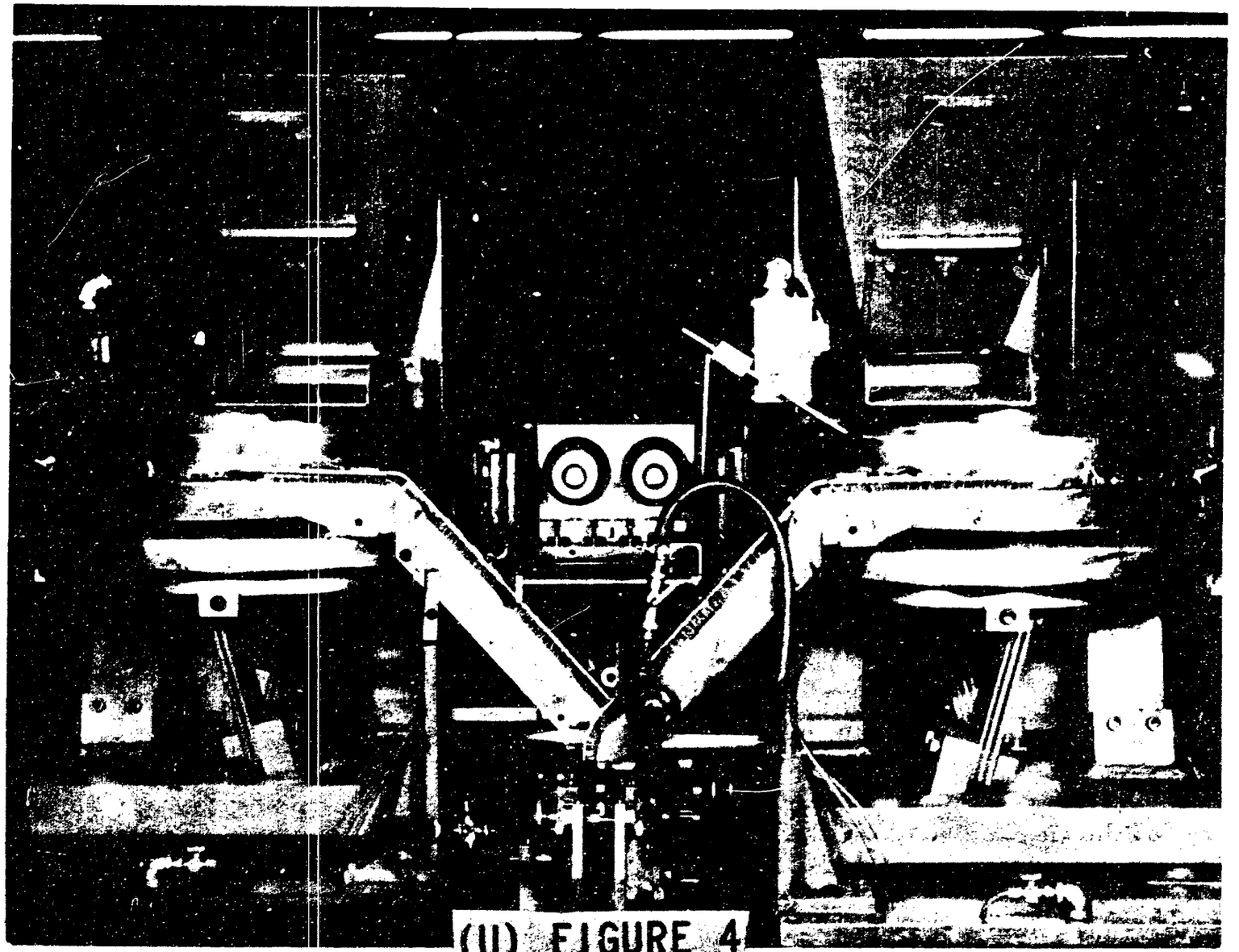

(U) FIGURE 4
FRONT VIEW OF WEAVING MACHINE

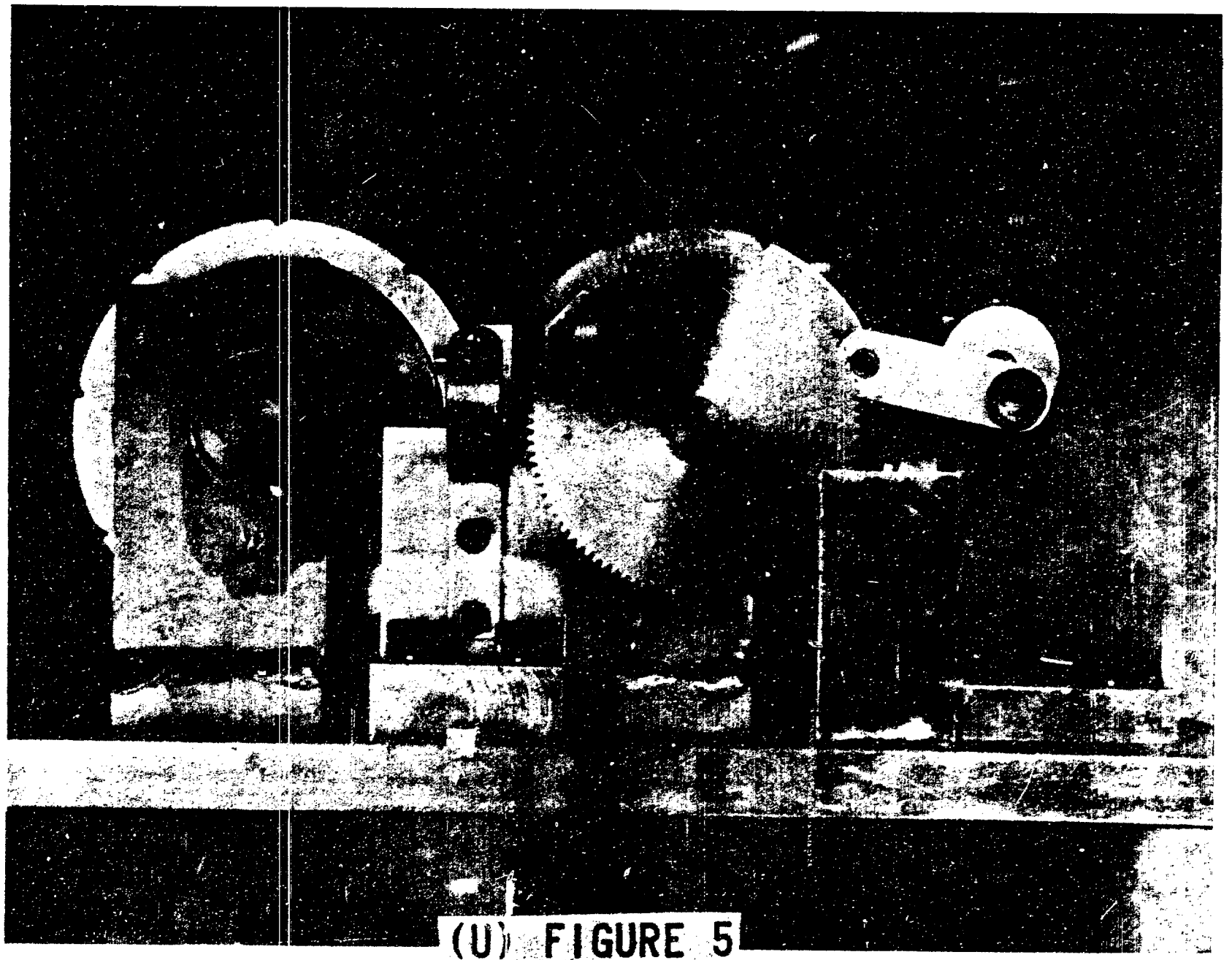

(U) FIGURE 5
FRONT VIEW OF WEAVING MECHANISM

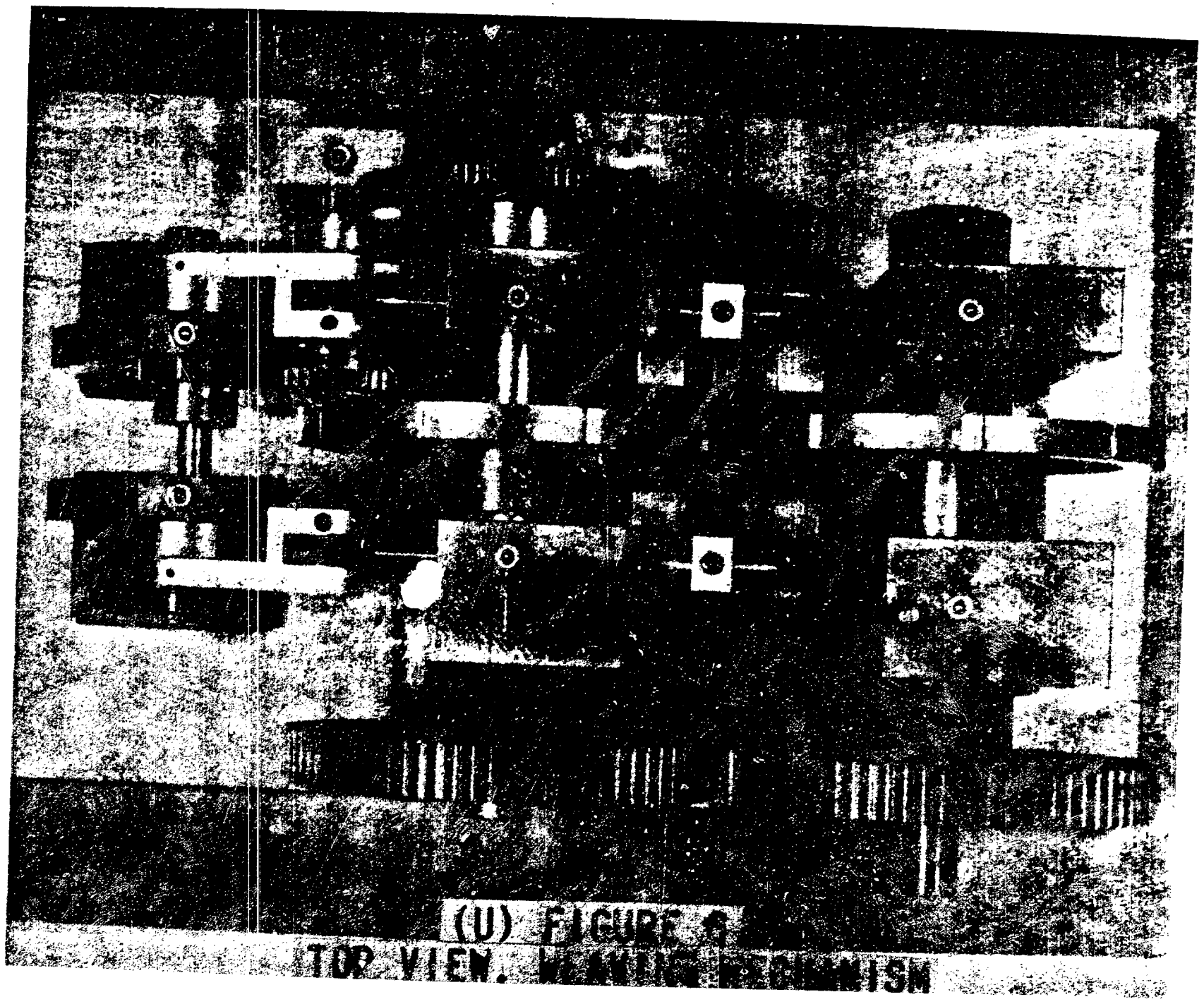

(U) FIGURE 6
TOP VIEW, [illegible]ISM

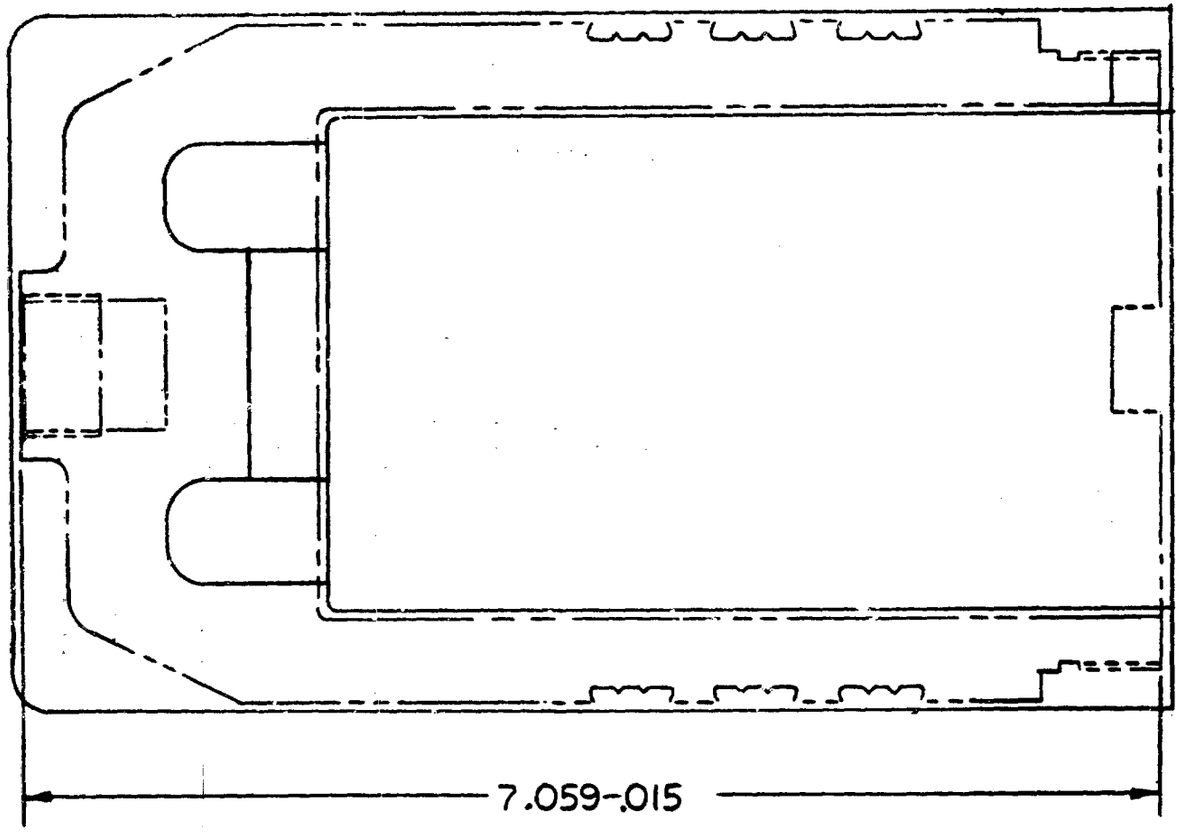

BODY, REAR

B-3363

(U) FIGURE 7

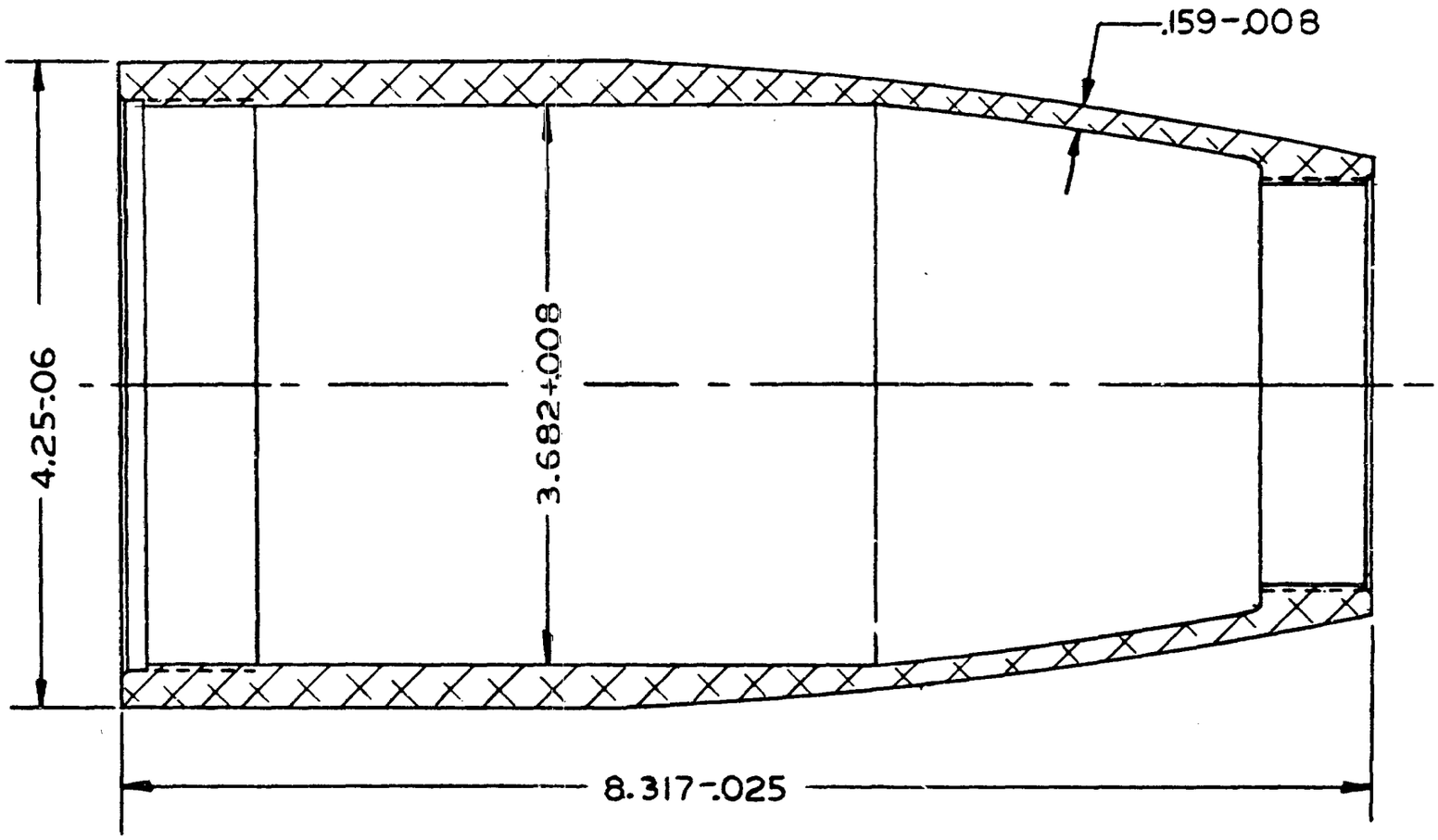

305701-BODY, FRONT (REV."C")

B-3362

(U) FIGURE 8

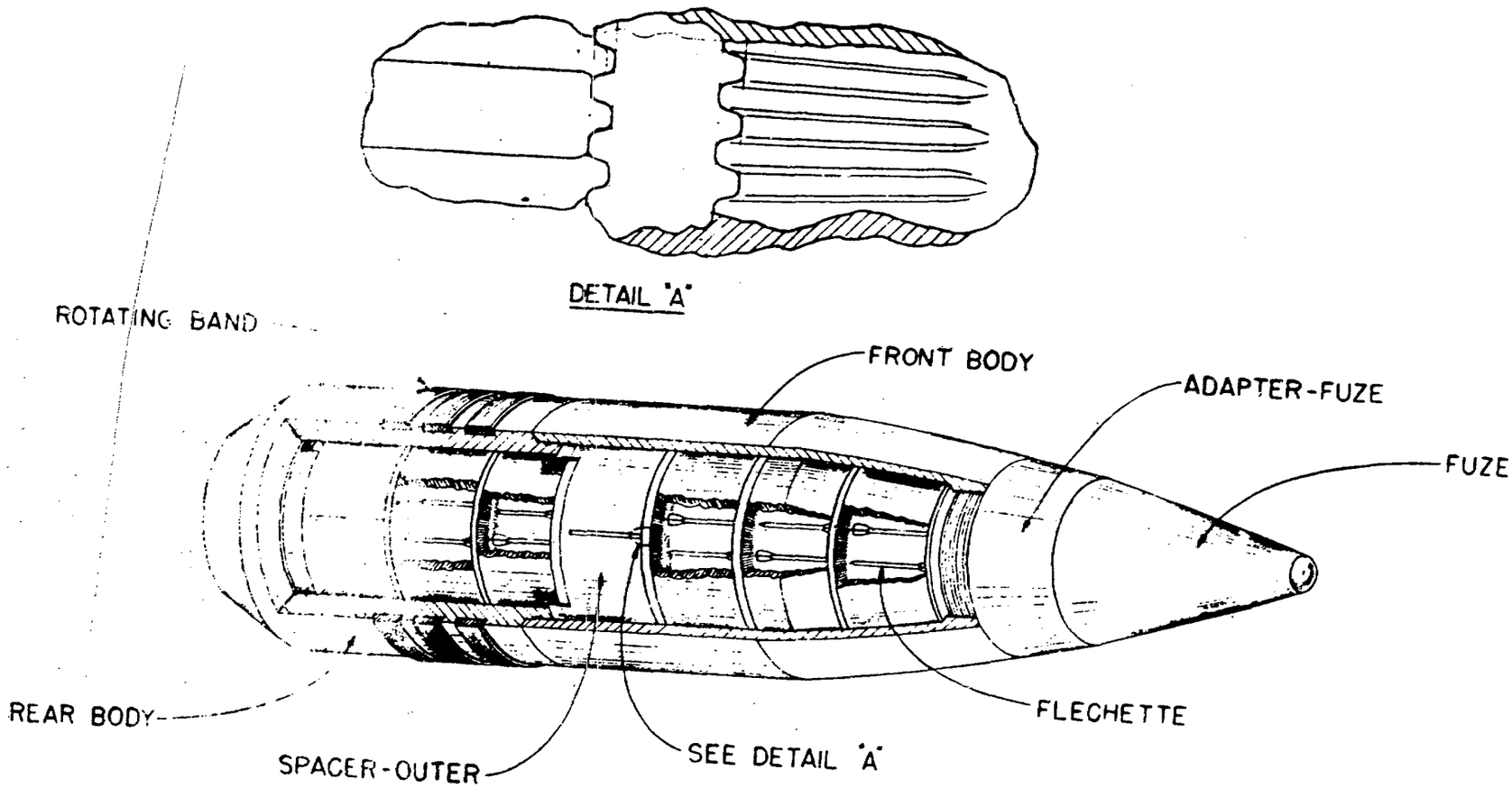

(C) FIGURE 9
105MM XM603 PROJECTILE

DOWNGRADED AT 3 YEAR INTERVALS
DECLASSIFIED AFTER 12 YEARS
DOD DIR 5200.10

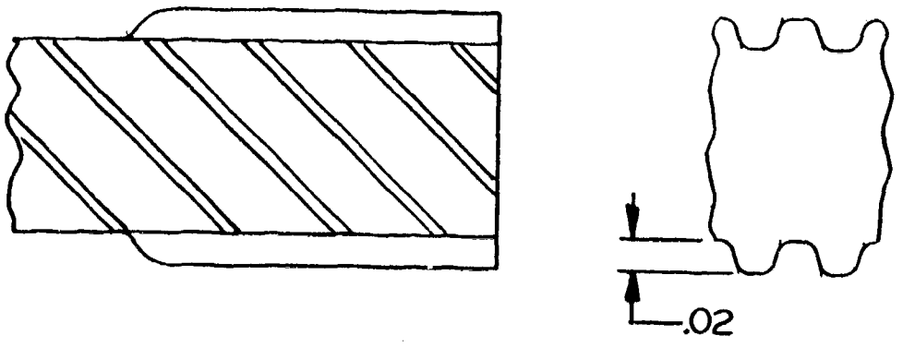

10 X 1

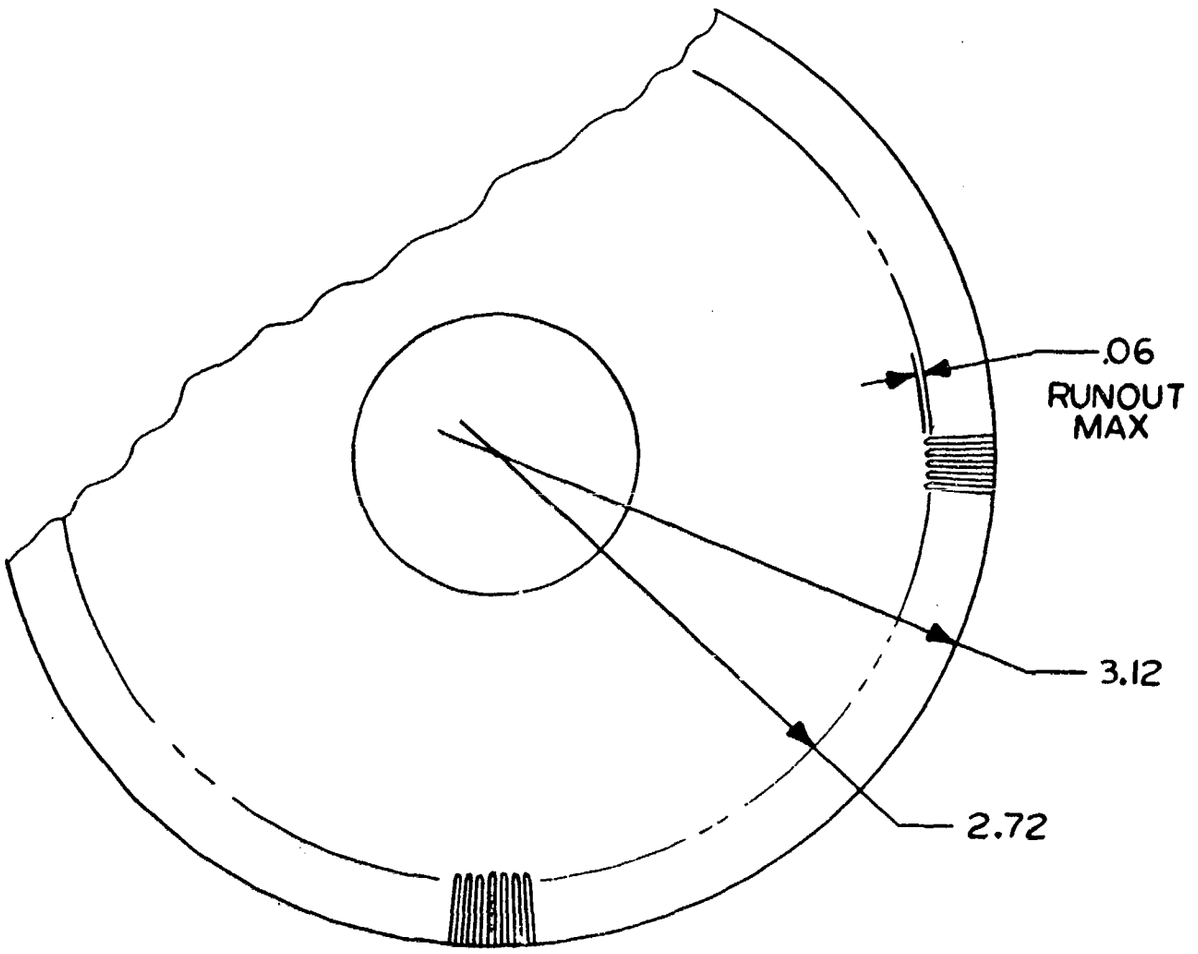

(U) FIGURE 10

2X1

SUPPORT PLATE DETAIL

SHOWING STAMPED GEAR TOOTH CONSTRUCTION

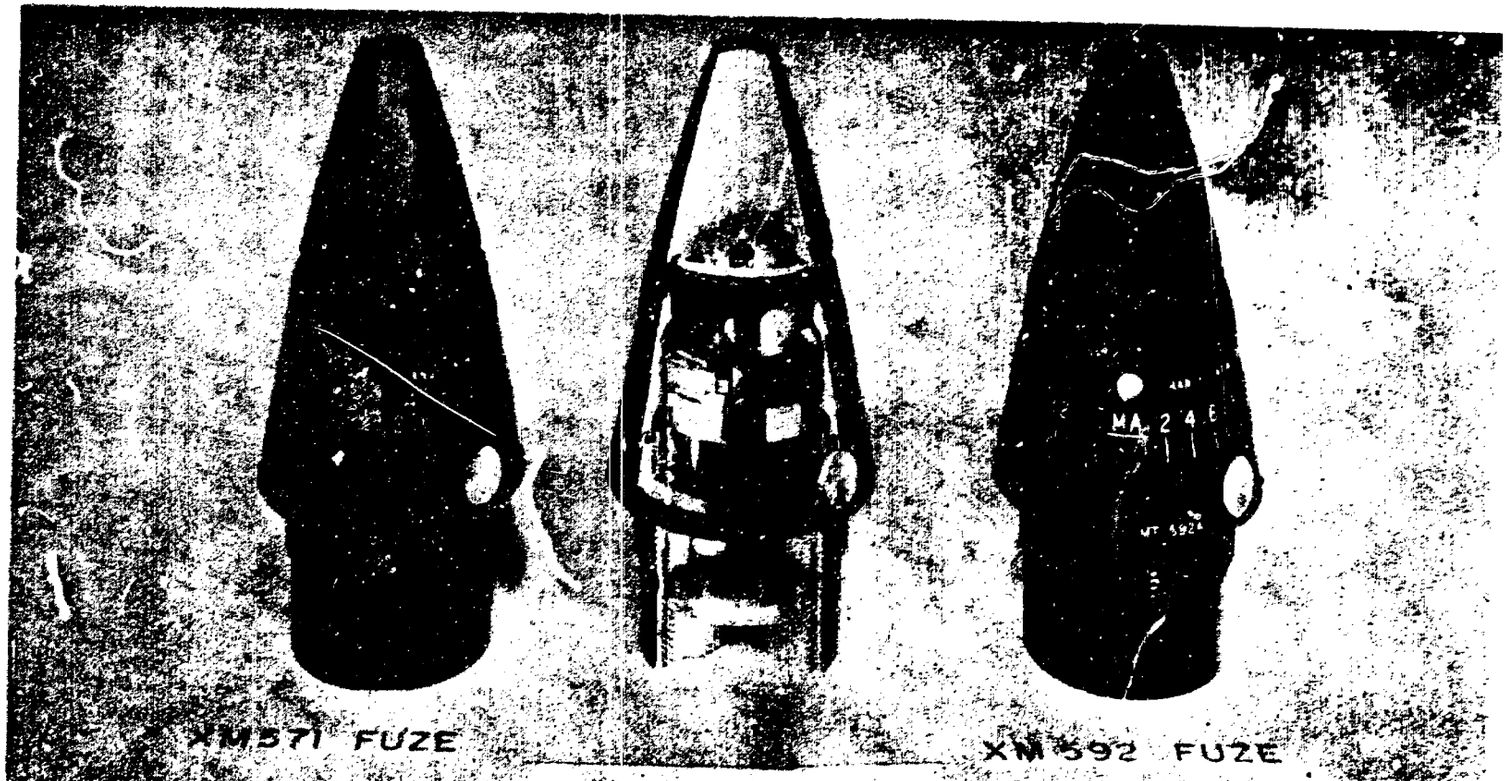

(U) FIGURE 11

(U) FIGURE 12

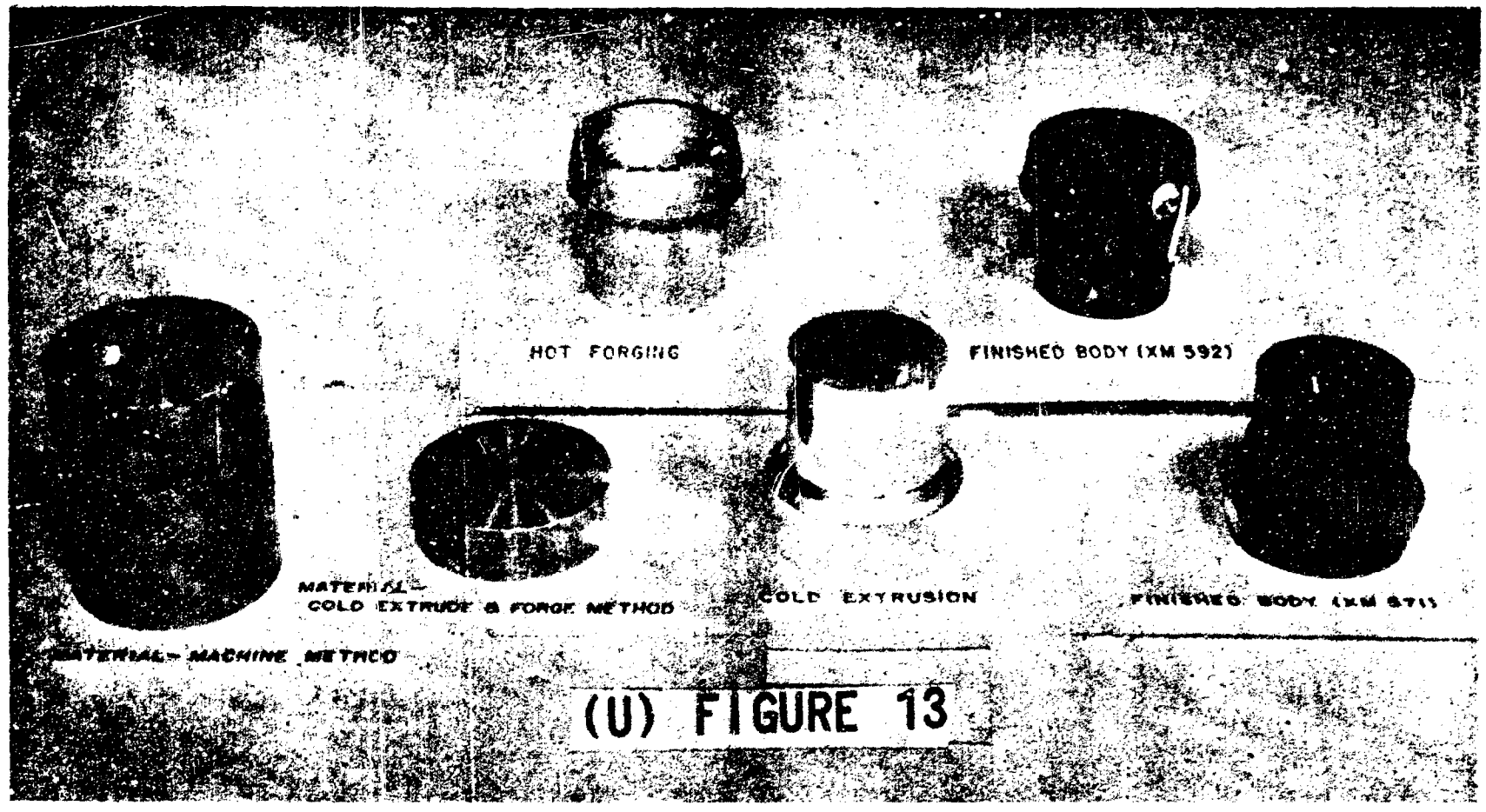
HOT FORGING
FINISHED BODY (XM 592)
MATERIAL—
COLD EXTRUDE & FORGE METHOD
COLD EXTRUSION
FINISHED BODY (XM 571)
MATERIAL—MACHINE METHOD

(U) FIGURE 13

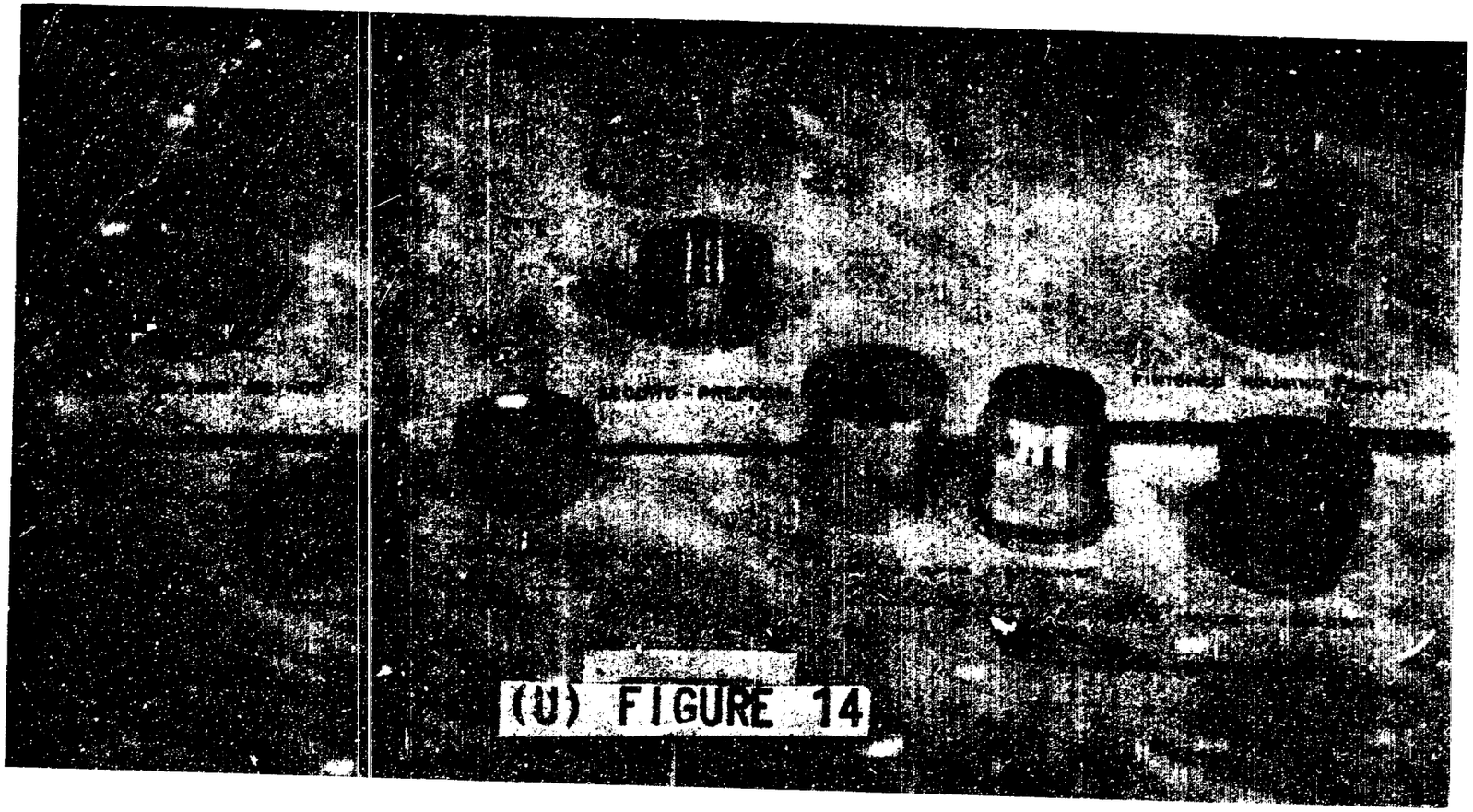

(U) FIGURE 14

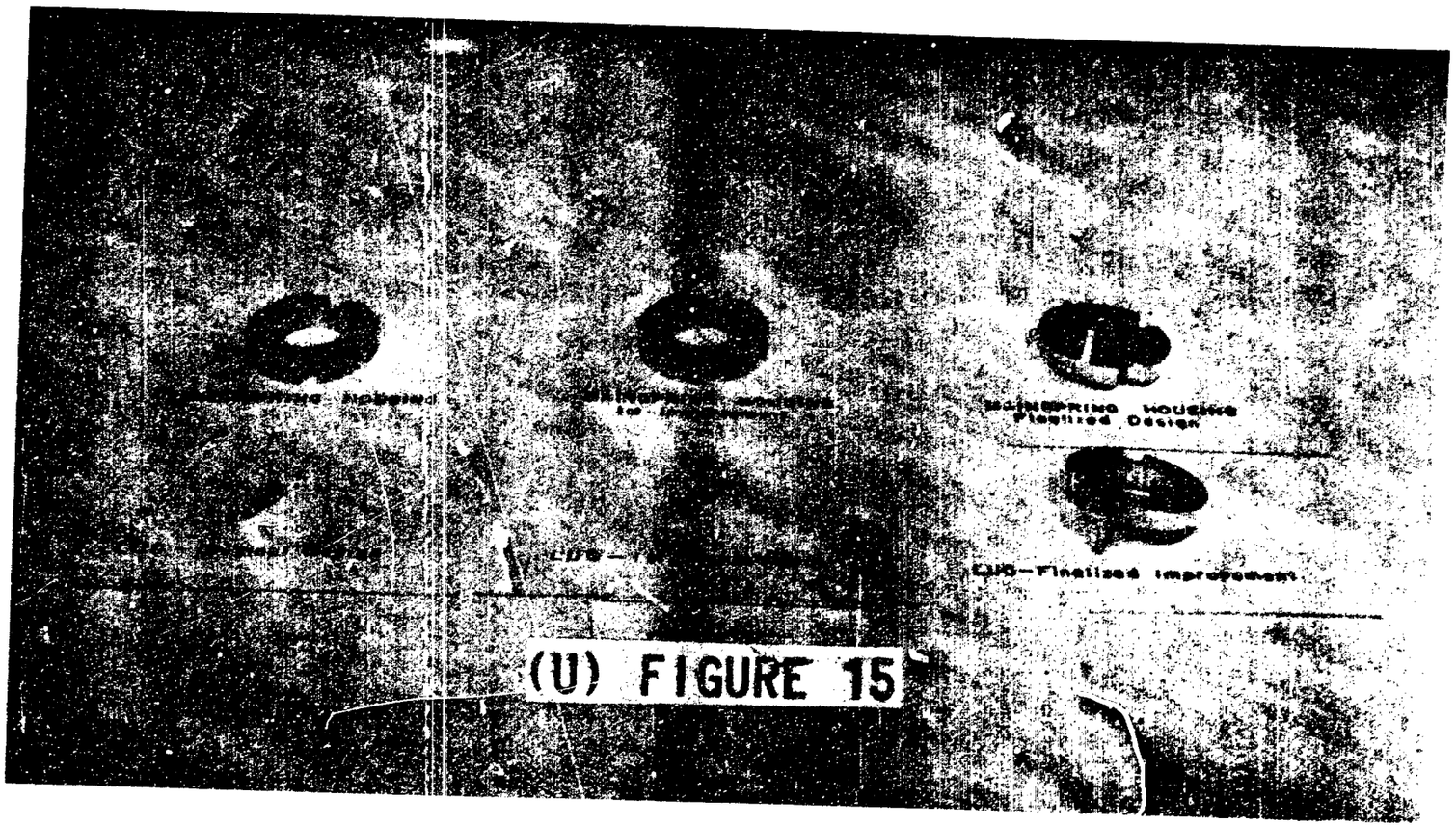
Bearing Housing
Plastics Design
CUS—Finalized Improvement

(U) FIGURE 15

(U) FIGURE 16

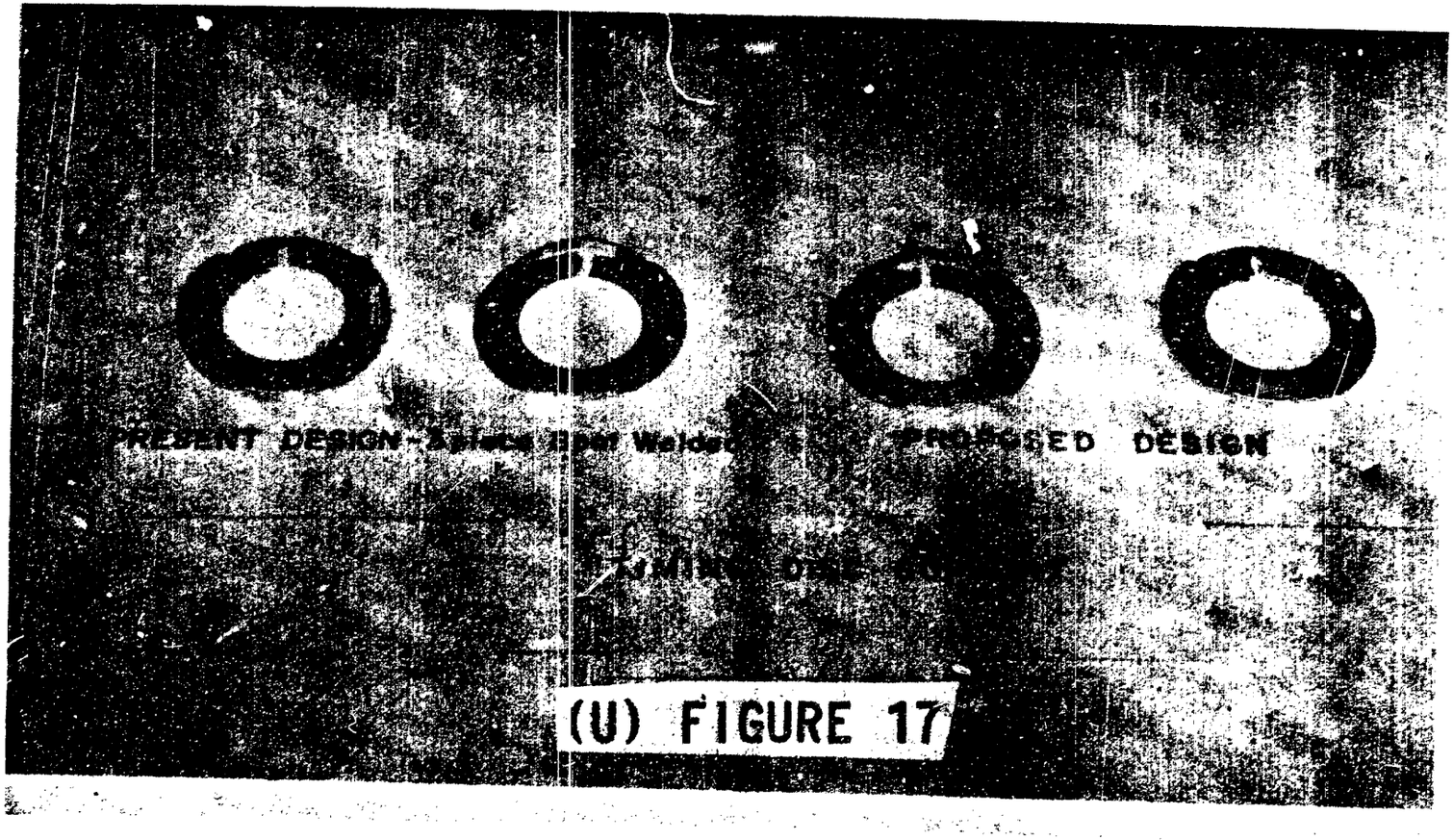

(U) FIGURE 17

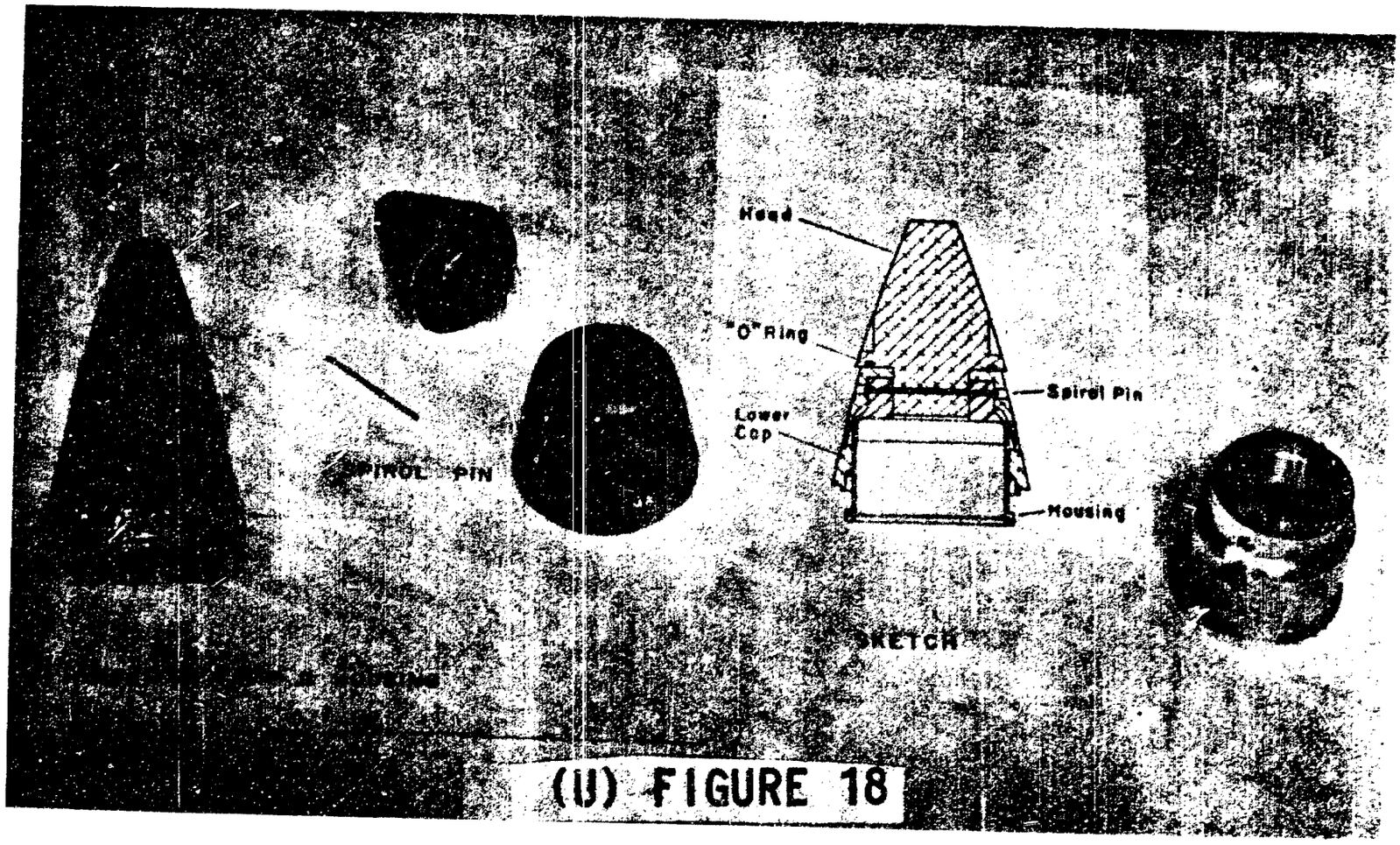

(U) FIGURE 18

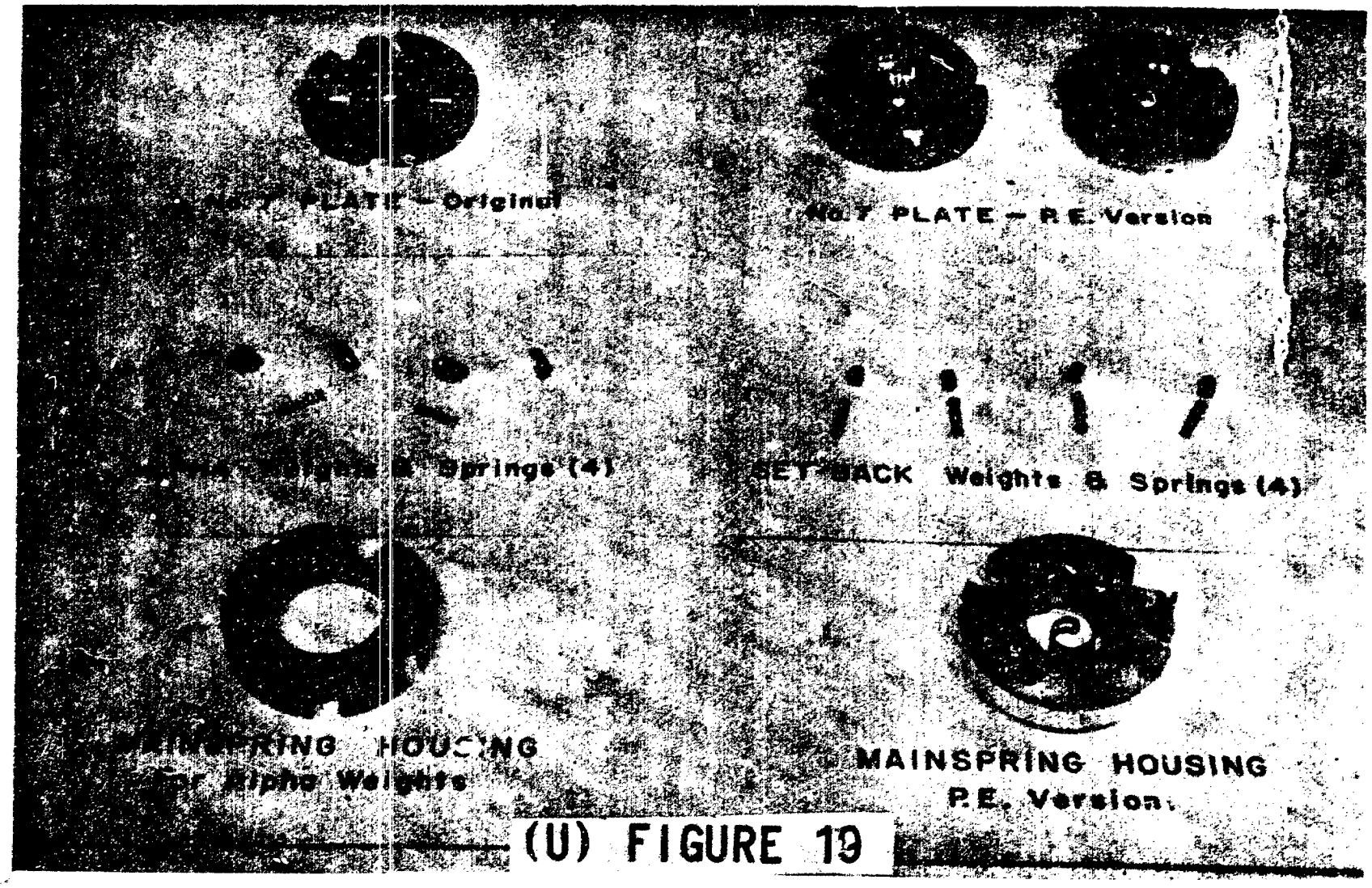
No. 7 PLATE — Original
No. 7 PLATE — P.E. Version
Springs (4)
SETBACK Weights & Springs (4)
MAINSPRING HOUSING
for Alpha Weights
MAINSPRING HOUSING
P.E. Version.

(U) FIGURE 19

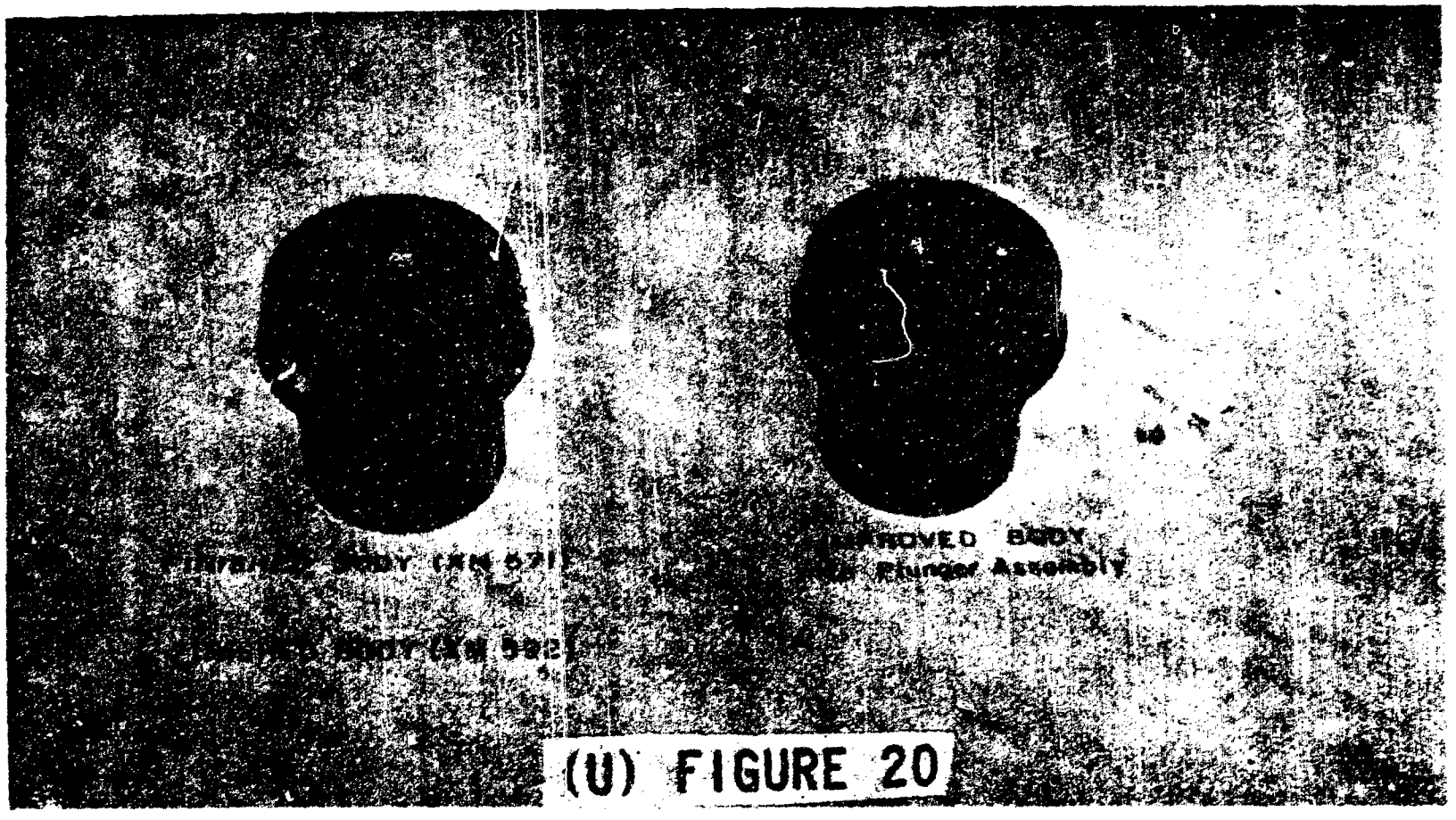

(U) FIGURE 20

ABSTRACT DATA

UNCLASSIFIED
Security Classification

DOCUMENT CONTROL DATA - R&D

(Security classification of title, body of abstract and indexing annotation must be entered when the overall report is classified)

1. ORIGINATING ACTIVITY *(Corporate author)* Picatinny Arsenal Dover, New Jersey	2a. REPORT SECURITY CLASSIFICATION CONFIDENTIAL 2b GROUP 4

3. REPORT TITLE

IN-PROCESS REVIEW OF THE ADVANCE PRODUCTION ENGINEERING PROGRAM FOR THE 105MM, XM494 APERS CARTRIDGE (U)

4. DESCRIPTIVE NOTES *(Type of report and inclusive dates)*

5. AUTHOR(S) *(Last name, first name, initial)*

DONADIO, Vincent J.
KELTING, William R.

6. REPORT DATE July 1966	7a. TOTAL NO. OF PAGES 42	7b. NO. OF REFS None

8a. CONTRACT OR GRANT NO. b. PROJECT NO. c. d.	9a. ORIGINATOR'S REPORT NUMBER(S) Technical Report 3407 9b. OTHER REPORT NO(S) *(Any other numbers that may be assigned this report)*

10. AVAILABILITY/LIMITATION NOTICES

11. SUPPLEMENTARY NOTES	12. SPONSORING MILITARY ACTIVITY Picatinny Arsenal U.S. Army Munitions Command Dover, New Jersey

13. ABSTRACT

Advance production engineering of the 105mm XM494 Cartridge used in the M60 Tank has resulted in a technological breakthrough which will substantially improve the manufacturability of the item. The program is scheduled for completion in FY67

DD FORM 1 JAN 64 1473

UNCLASSIFIED
Security Classification

UNCLASSIFIED
Security Classification

14. KEY WORDS	LINK A ROLE	LINK A WT	LINK B ROLE	LINK B WT	LINK C ROLE	LINK C WT
Advance Production Engineering Program						
105mm XM494 Cartridge						
105mm XM603 Projectile						
XM571 Mechanical Timer (MT) Fuze						
T369 Mechanical Timer (MT) Fuze						
M60 Tank						
Anti-aircraft						
Anti-personnel (APERS) Round						
Anti-Materiel Round						
Flechette						

INSTRUCTIONS

1. ORIGINATING ACTIVITY: Enter the name and address of the contractor, subcontractor, grantee, Department of Defense activity or other organization *(corporate author)* issuing the report.

2a. REPORT SECURITY CLASSIFICATION: Enter the overall security classification of the report. Indicate whether "Restricted Data" is included. Marking is to be in accordance with appropriate security regulations.

2b. GROUP: Automatic downgrading is specified in DoD Directive 5200.10 and Armed Forces Industrial Manual. Enter the group number. Also, when applicable, show that optional markings have been used for Group 3 and Group 4 as authorized.

3. REPORT TITLE: Enter the complete report title in all capital letters. Titles in all cases should be unclassified. If a meaningful title cannot be selected without classification, show title classification in all capitals in parenthesis immediately following the title.

4. DESCRIPTIVE NOTES: If appropriate, enter the type of report, e.g., interim, progress, summary, annual, or final. Give the inclusive dates when a specific reporting period is covered.

5. AUTHOR(S): Enter the name(s) of author(s) as shown on or in the report. Enter last name, first name, middle initial. If military, show rank and branch of service. The name of the principal author is an absolute minimum requirement.

6. REPORT DATE: Enter the date of the report as day, month, year; or month, year. If more than one date appears on the report, use date of publication.

7a. TOTAL NUMBER OF PAGES: The total page count should follow normal pagination procedures, i.e., enter the number of pages containing information.

7b. NUMBER OF REFERENCES: Enter the total number of references cited in the report.

8a. CONTRACT OR GRANT NUMBER: If appropriate, enter the applicable number of the contract or grant under which the report was written.

8b, 8c, & 8d. PROJECT NUMBER: Enter the appropriate military department identification, such as project number, subproject number, system numbers, task number, etc.

9a. ORIGINATOR'S REPORT NUMBER(S): Enter the official report number by which the document will be identified and controlled by the originating activity. This number must be unique to this report.

9b. OTHER REPORT NUMBER(S): If the report has been assigned any other report numbers *(either by the originator or by the sponsor)*, also enter this number(s).

10. AVAILABILITY/LIMITATION NOTICES: Enter any limitations on further dissemination of the report, other than those imposed by security classification, using standard statements such as:

(1) "Qualified requesters may obtain copies of this report from DDC."

(2) "Foreign announcement and dissemination of this report by DDC is not authorized."

(3) "U. S. Government agencies may obtain copies of this report directly from DDC. Other qualified DDC users shall request through _____."

(4) "U. S. military agencies may obtain copies of this report directly from DDC. Other qualified users shall request through _____."

(5) "All distribution of this report is controlled. Qualified DDC users shall request through _____."

If the report has been furnished to the Office of Technical Services, Department of Commerce, for sale to the public, indicate this fact and enter the price, if known.

11. SUPPLEMENTARY NOTES: Use for additional explanatory notes.

12. SPONSORING MILITARY ACTIVITY: Enter the name of the departmental project office or laboratory sponsoring *(paying for)* the research and development. Include address.

13. ABSTRACT: Enter an abstract giving a brief and factual summary of the document indicative of the report, even though it may also appear elsewhere in the body of the technical report. If additional space is required, a continuation sheet shall be attached.

It is highly desirable that the abstract of classified reports be unclassified. Each paragraph of the abstract shall end with an indication of the military security classification of the information in the paragraph, represented as *(TS)*, *(S)*, *(C)*, or *(U)*.

There is no limitation on the length of the abstract. However, the suggested length is from 150 to 225 words.

14. KEY WORDS: Key words are technically meaningful terms or short phrases that characterize a report and may be used as index entries for cataloging the report. Key words must be selected so that no security classification is required. Idenfiers, such as equipment model designation, trade name, military project code name, geographic location, may be used as key words but will be followed by an indication of technical context. The assignment of links, rules, and weights is optional.

UNCLASSIFIED
Security Classification

SUPPLEMENTARY

INFORMATION

REQUEST FOR/OR NOTIFICATION OF REGRADING ACTION

For use of this form, see AR 380-5; the proponent agency is OACSI.

DATE: 22 May 1996

FILE:

READ INSTRUCTIONS ON REVERSE SIDE BEFORE COMPLETING THIS FORM

TO: *(Include ZIP Code)*

Director
Defense Technical Information Center
ATTN: DTIC-OC
8725 John J. Kingman Rd, STE 0944
Ft. Belvoir, VA 22060-6218

FROM: *(Include ZIP Code)*

Suseela Chandrasekar
US Army - ARDEC
AMSTA-AR-IMC, Bldg. 59
Picatinny Arsenal, NJ 07806-5000

ERRATA

☒ THE DOCUMENT(S) DESCRIBED BELOW HAS/HAVE BEEN REVIEWED FOR REGRADING AND ACTION HAS BEEN TAKEN AS INDICATED. APPROPRIATE ACTION SHOULD BE TAKEN TO MARK YOUR COPIES AND NOTIFY ALL RECIPIENTS TO WHOM ADDITIONAL DISTRIBUTION WAS FURNISHED IN ACCORDANCE WITH AR 380-5. DOCUMENTS CONCERNING THIS SAME SUBJECT SHOULD BE REVIEWED FOR POSSIBLE REGRADING.

☐ REQUEST DOCUMENT(S) DESCRIBED BELOW BE REVIEWED TO DETERMINE WHETHER THEY CAN BE DOWNGRADED OR DECLASSIFIED AT THIS TIME. *(Include justification in the "REMARKS" section of this form.)*

☐ REQUEST APPROPRIATE CLASSIFICATION/REGRADING INSTRUCTIONS FOR DOCUMENTS DESCRIBED BELOW.

CONTROL [redacted]	DESCRIPTION [redacted] *UNCLASSIFIED SUBJECT OR SHORT TITLE, INDORSEMENTS, INCLOSURES)*	CLASSIFICATION/ [redacted] OLD	NEW
AD518320	PATR-4283 "Advanced production engineering for the 105mm XM494E3 antipersonnel-tracer cartridge". Nov. 1971	U/L	U/U
AD373936	PATR-3407 "In-process review of the advance production engineering program for the 105mm XM494 APERS cartridge". July 1966	U/L	U/U

ERRATA
AD-373936

PRINTED OR TYPED NAME AND TITLE OF OFFICER

Suseela Chandrasekar, Chief, IRC

SIGNATURE

Suseela Chandrasekar

DA FORM 1 SEP 77 1575 EDITION OF 1 SEP 62 IS OBSOLETE.