UNCLASSIFIED

AD NUMBER
AD340311
CLASSIFICATION CHANGES
TO: unclassified
FROM: secret
LIMITATION CHANGES
TO: Approved for public release, distribution unlimited
FROM: Not releasable to foreign nationals.
AUTHORITY
DTRA ltr, 6 May 99; DTRA ltr, 6 May 99

THIS PAGE IS UNCLASSIFIED

SECRET
FORMERLY RESTRICTED DATA

AD 340311

Reproduced
by the

DEFENSE DOCUMENTATION CENTER

FOR

SCIENTIFIC AND TECHNICAL INFORMATION

CAMERON STATION, ALEXANDRIA, VIRGINIA

FORMERLY RESTRICTED DATA
SECRET

NOTICE: When government or other drawings, specifications or other data are used for any purpose other than in connection with a definitely related government procurement operation, the U. S. Government thereby incurs no responsibility, nor any obligation whatsoever; and the fact that the Government may have formulated, furnished, or in any way supplied the said drawings, specifications, or other data is not to be regarded by implication or otherwise as in any manner licensing the holder or any other person or corporation, or conveying any rights or permission to manufacture, use or sell any patented invention that may in any way be related thereto.

NOTICE:

THIS DOCUMENT CONTAINS INFORMATION AFFECTING THE NATIONAL DEFENSE OF THE UNITED STATES WITHIN THE MEANING OF THE ESPIONAGE LAWS, TITLE 18, U.S.C., SECTIONS 793 and 794. THE TRANSMISSION OR THE REVELATION OF ITS CONTENTS IN ANY MANNER TO AN UNAUTHORIZED PERSON IS PROHIBITED BY LAW.

DASA - 1390

SECRET FORMERLY RESTRICTED DATA

CATALOGED BY DDC
AS AD No. 340 [illegible]

A SUMMARY OF UNDERGROUND AND EARTH-COVERED LOADING AND RESPONSE SYSTEMS SUBJECTED TO THE EFFECTS OF NUCLEAR WEAPONS DURING FULL-SCALE TEST OPERATIONS CONDUCTED 1951-1958

Final Report:
Contract DA-49-146-XZ-033
United States Department of Defense
Defense Atomic Support Agency
Washington 25, D. C.

The Pennsylvania State University
College of Engineering
University Park, Pennsylvania

Issuance Date: 31 August 1963

FORMERLY RESTRICTED DATA
Handle as Restricted Data in Foreign Dissemination
Section 144b, Atomic Energy Act of 1954

This document consists of 238 pages
Number [illegible] of [illegible] copies

This material contains information affecting the national defense of the United States within the meaning of the espionage laws, Title 18, U.S.C., Sections 793 and 794, the transmission or revelation of which in any manner to an unauthorized person is prohibited by law.

SECRET FORMERLY RESTRICTED DATA

SECRET FORMERLY RESTRICTED DATA

A SUMMARY OF UNDERGROUND AND EARTH-COVERED LOADING AND RESPONSE SYSTEMS SUBJECTED TO THE EFFECTS OF NUCLEAR WEAPONS DURING FULL-SCALE TEST OPERATIONS CONDUCTED 1951 - 1958

Final Report:
Contract DA-49-146-XZ-033
United States Department of Defense
Washington 25, D. C.

The Pennsylvania State University
College of Engineering
University Park, Pennsylvania

Issuance Date: 31 August 1963

FORMERLY RESTRICTED DATA
Handle as Restricted Data in Foreign Dissemination Section 144b, Atomic Energy Act of 1954

This document consists of 238 pages
Number of copies

This material contains information affecting the national defense of the United States within the meaning of the espionage laws, Title 18, U.S.C., Sections 793 and 794, with transmission or revelation of which in any manner to an unauthorized person is prohibited by law.

SECRET FORMERLY RESTRICTED DATA

Qualified requestors may obtain copies of this report from DDC

Reproduction in whole or in part is permitted
for any purpose of the United States Government.

ACKNOWLEDGEMENTS

The following persons contributed materially to the literature search and compilation of test data:

Allen F. Dill
Harry H. West
Robert M. Barnoff
Richard H. Seabold

The writers sincerely appreciate the work accomplished. Sincere appreciation is also extended to the cognizant personnel of the Defense Atomic Support Agency for their prompt attention to our needs.

Respectfully submitted:

Albert W. Knott

Gifford H. Albright

FOREWORD

Full scale tests of underground and earth-covered loading and response systems subjected to the effects of nuclear weapons were made during the period of 1951 through 1958. Much of this data has been scattered through classified and unclassified literature without any previous attempt at correlation or cross reference purposes for use by researchers in the field of structural dynamics and weapons effects testing.

This document includes, in one volume, all available pertinent data arranged in order of test operation, but cross reference indexed by functional categories. Each entry includes project and structure identification, cross reference listing, report references, project objectives, structural description, structural details, soil characteristics, shot information, the test layout, loading data, a summary, other remarks, and subsequent testing. This information is then correlated in a series of charts designed to show quickly and graphically the relation between similar tests, and so arranged that positive trends in structural response become apparent. A general discussion and recommendations are presented. Maps of the Eniwetok Atoll and the Nevada Test Site are included to facilitate structure location.

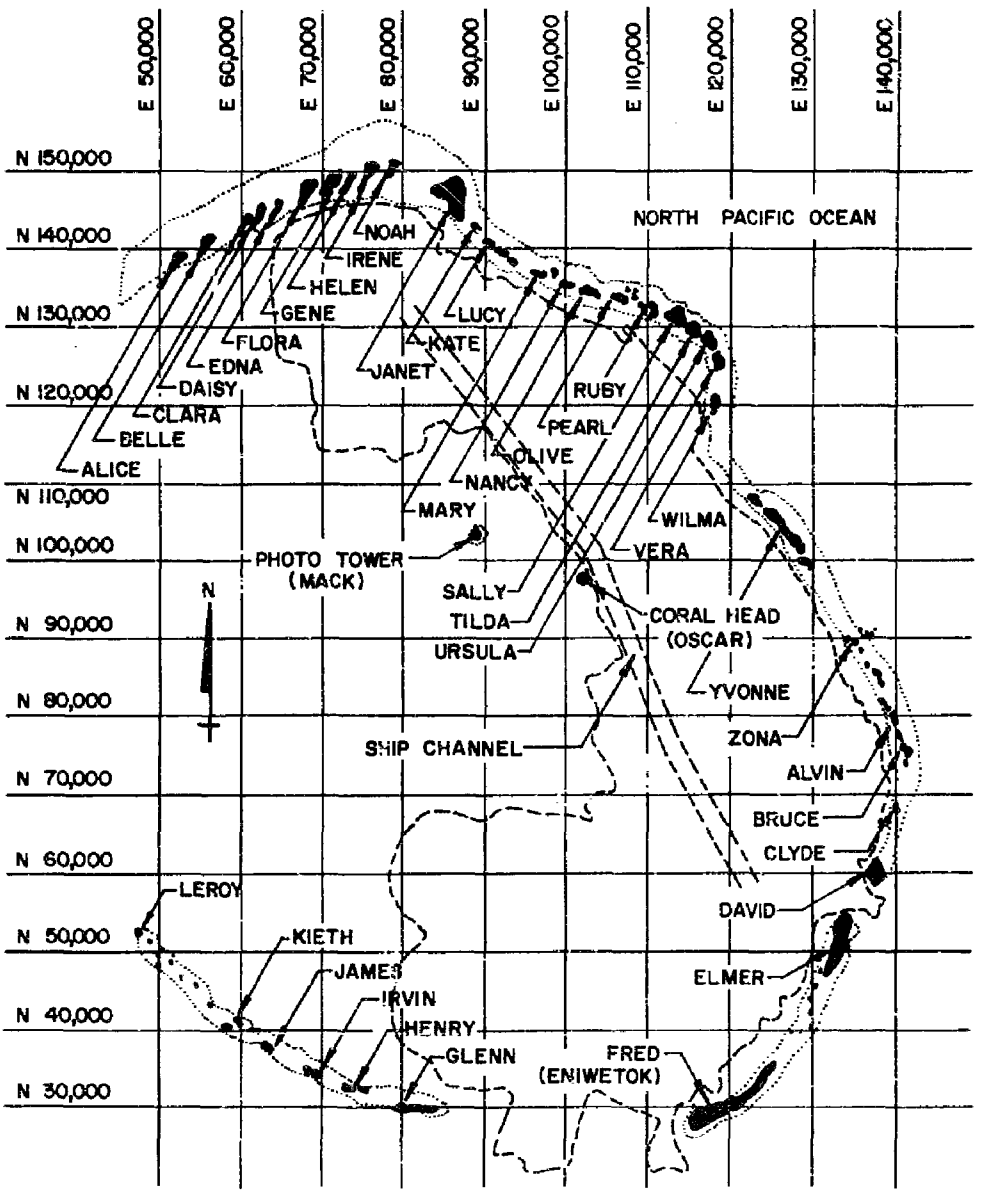

Eniwetok Proving Grounds, Marshall Islands

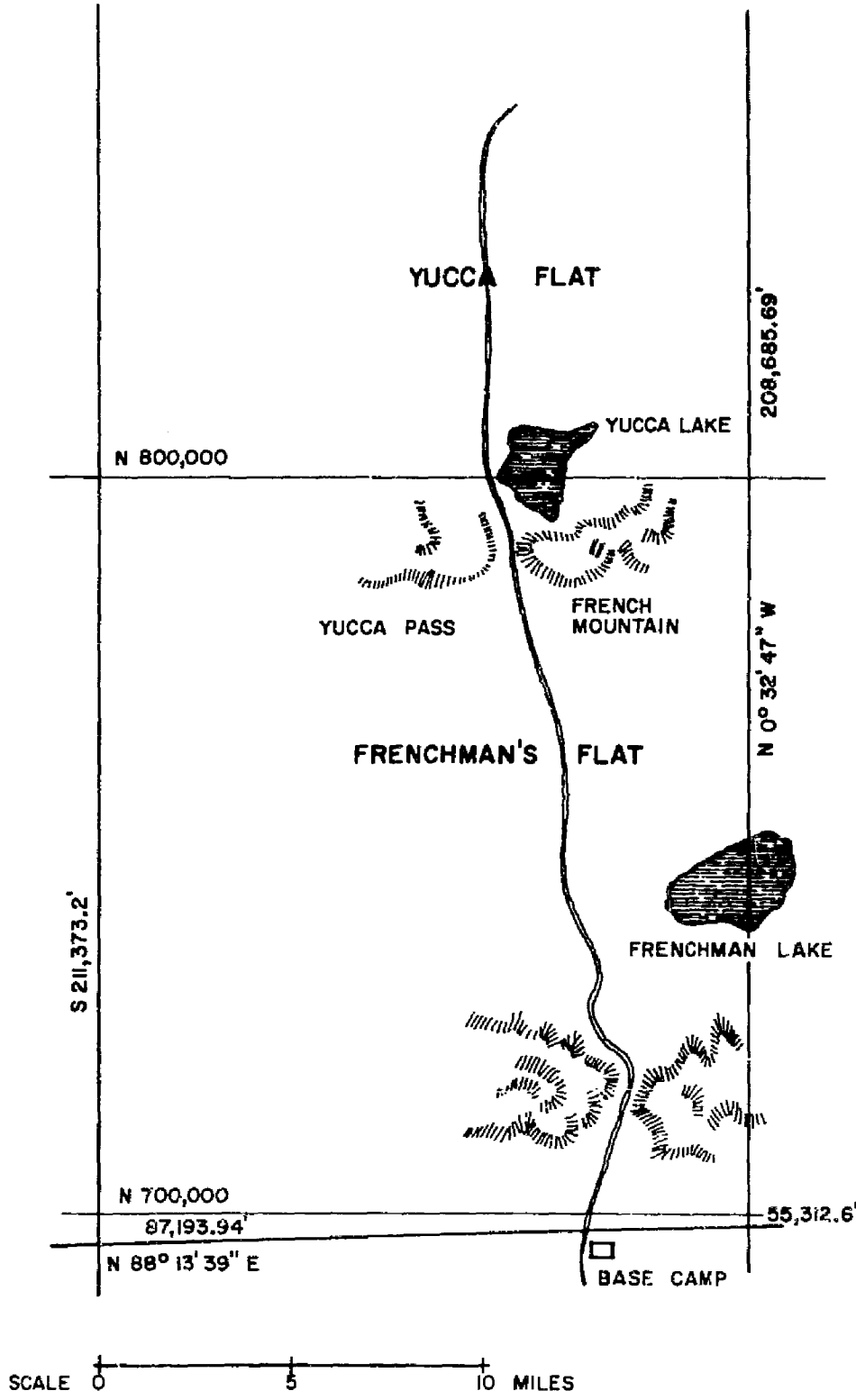

Nevada Test Site, Mercury, Nevada

TABLE OF CONTENTS

Foreword ii

Map of Eniwetok Proving Grounds, Marshall Islands iii

Map of Nevada Test Site, Mercury, Nevada iv

Cross Reference Index x

PART 1 Summary of Loading and Response Systems 1

Operation Greenhouse

3.1.3	Semi-Buried Cast-In-Place Box and Precast Concrete Pipe Sections; Corrugated Steel Pipe Sections	2
3.2.4a	Semi-Buried Precast Concrete Magazine (Gable)	7
3.2.6	Semi-Buried Precast Concrete Magazine (Dome)	12

Operation Buster-Jangle

3.13	Buried Reinforced Concrete Box (Open Top)	16
3.21	Buried Steel and Reinforced Concrete Cells (Open Top)	20
3.22	Buried Corrugated Iron and Reinforced Concrete Cells (Open Top)	29
3.23	Precast Concrete Pipe Sections	32
9.1a	Earth-Covered Corrugated Steel Arch Sections	35
9.1b	Buried Concrete Pipe and Currugated Steel Pipe	39

Operation Ivy

Station 200	Massive Reinforced Concrete Semi-Buried Shelter	44
Station 252	Reinforced Concrete Semi-Buried Shelter	48
Station 307	Reinforced Concrete Semi-Buried Shelter	52
Station 520	Massive Reinforced Concrete Semi-Buried Shelter	55

Operation Upshot-Knothole

3.7	Buried Reinforced Concrete Personnel Shelters	59
3.8	Buried Steel Beam Response Elements	63
3.13a	Semi-Buried Precast Concrete Shelter (Gable)	67
3.15	Earth-Covered Corrugated Steel Arch Shelter	70
21.1	Buried Reinforced Concrete Personnel Shelters	74

Operation Castle

Station 200	Massive Reinforced Concrete Semi-Buried Shelter (also identified as Operation Ivy, Station 200)	82
Station 1810.05	Massive Reinforced Concrete Semi-Buried Shelter (also identified as Operation Ivy, Station 520)	83

Operation Teapot

3.3.1	Buried Flexible Measuring Devices	84
3.3.2	Buried Reinforced Concrete Box (Open Top)	87
3.4	Buried Steel Beam Response Elements	91
3.6	Earth-Covered Corrugated Steel Arch Shelter	95

34.3 Buried Reinforced Concrete Personnel Shelters 100

Operation Redwing

Station 1311.04 Massive Reinforced Concrete Semi-Buried Shelter . 106

Station 1611 Massive Reinforced Concrete Semi-Buried Shelter (also identified as Operation Ivy, Station 200). . 108

Operation Plumbbob

1.7 Buried Response Cylinders (Drums with Flexible Diaphragms) 109

3.1 Reinforced Concrete Arch Structures 116

3.2 121
3.2a Buried Corrugated Steel Cattlepass Sections
3.2b Buried Corrugated Steel Cattlepass Sections
3.2c Buried Corrugated Steel Cattlepass Sections
3.2d Buried Corrugated Steel Pipe Sections
3.2e Buried Precast Concrete Pipe Sections
3.2f Buried Corrugated Steel Cattlepass Sections
3.2g Buried Corrugated Steel Cattlepass Sections
3.2h Buried Corrugated Steel Pipe Sections
3.2j Buried Precast Concrete Pipe Sections
3.2k Buried Corrugated Steel Cattlepass Sections
3.2l Buried Precast Concrete Pipe Sections
3.2m Buried Corrugated Steel Cattlepass Sections

3.3 Buried Corrugated Steel Arch Shelters 127

3.4 Buried Steel Beam Response Elements 132

3.5 Buried Isolated Response Cylinders 137

30.2 Buried Reinforced Concrete Parking Garage-Shelter 141

30.3 Semi-Buried Reinforced Concrete Family Shelters 144

30.6 II-1 Buried Reinforced Concrete Box Section Personnel Shelter (French Type) 147

30.6 II-2 Buried Precast Concrete Pipe Section 149

30.6 II-3 Buried Reinforced Concrete Box Section Personnel Shelter (French Type) 151

30.6 II-4 Buried Reinforced Concrete Box Section Personnel Shelter (French Type) 153

30.6 II-5 Buried Reinforced Concrete Box Section Personnel Shelter (French Type) 155

30.7 RAa Buried Reinforced Concrete Box Section Personnel Shelter (German Type) 157

30.7 RAb Buried Reinforced Concrete Box Section Personnel Shelter (German Type) 159

30.7 RAc Buried Reinforced Concrete Box Section Personnel Shelter (German Type) 161

30.7 RAd Buried Reinforced Concrete Box Section Personnel Shelter (German Type) 163

30.7 CAa Buried Reinforced Concrete Cylindrical Section Personnel Shelter (German Type) 165

30.7 CAb Buried Reinforced Concrete Cylindrical Section Personnel Shelter (German Type) 167

30.7 RCa Buried Reinforced Concrete Box Section Personnel Shelter (German Type) 169

34.3 Buried Corrugated Steel Pipe Sections 171

Station T 38 Massive Reinforced Concrete Semi-Buried Shelter 174

Station 7-300 Massive Reinforced Concrete Semi=Buried Shelter 177

Station 9-22-6001 Massive Reinforced Concrete Semi-Buried Shelter 180

Operation Hardtack

1.9 Buried Response Cylinders (Drums with Flexible Diaphragms) 183

3.2 Semi-Buried Corrugated Steel Arch Structures 189

Station 1311 Reinforced Concrete Earth-Covered Shelter 194

Station 1314 Massive Reinforced Concrete Semi-Buried Shelter (also identified as Operation Ivy, Station 200 197

Station 1525 Massive Reinforced Concrete Earth-Covered Shelter 198

Station 1526 Massive Reinforced Concrete Earth-Covered Shelter 201

PART 2 Discussion and Correlation of Tests 203

Discussion and Correlation of Tests 203

Correlation of Test Results 203

List of Charts 204

Charts 207

General Discussion of Test Results 217

Limitations 220

Recommendations 221

CROSS REFERENCE INDEX

BURIED CONCRETE

Concrete Pipe
Buster-Jangle 9.1b 39

Reinforced Concrete Personnel Shelters
Upshot-Knothole 3.7 59
Upshot-Knothole 21.1a through 21.1h 74

Teapot 34.3a1, a2, b1, b2 100

Reinforced Concrete Arch Structures
Plumbbob 3.1a, b, c, d 116

Precast Concrete Pipe Sections
Buster-Jangle 3.23a, b 32
Plumbbob 3.2e, j, l 121
Plumbbob 30.6 II-2 149

Reinforced Concrete Parking Garage - Shelter
Plumbbob 30.2 141

Reinforced Concrete Box Section Personnel Shelter (French Type)
Plumbbob 30.6 II-1, 3, 4, 5 147

Reinforced Concrete Box Section Personnel Shelter (German Type)
Plumbbob 30.7 RAa, b, c, d, RCa 157

Reinforced Concrete Cylindrical Section Personnel Shelter (German Type)
Plumbbob 30.7 CAa, b 165

BURIED STEEL

Corrugated Steel Pipe
Buster-Jangle 9.1b 35

Corrugated Steel Pipe Sections
Plumbbob 3.2a, b, c, d, f, g, h, k, m 121
Plumbbob 34.3-01, 02 171

Corrugated Steel Arch Shelters
Plumbbob 3.3a, b, c 127

CROSS REFERENCE INDEX

EARTH-COVERED AND SEMI-BURIED CONCRETE

Semi-Buried Cast-In-Place Box and Precast Concrete Pipe Sections (as part of composite shelter)
Greenhouse 3.1.3 2

Semi-Buried Precast Concrete Magazine (Gable)
Greenhouse 3.2.4a 7

Semi-Buried Precast Concrete Magazine (Dome)
Greenhouse 3.2.6 12

Semi-Buried Precast Concrete Shelter (Gable)
Upshot-Knothole 3.13a 67

Semi-Buried Reinforced Concrete Family Shleters
Plumbbob 30.3 144

EARTH-COVERED AND SEMI-BURIED STEEL

Corrugated Steel Pipe Sections (as part of composite shelter)
Greenhouse 3.1.3 2

Earth-Covered Corrugated Steel Arch Shelter
Upshot-Knothole 3.15 95

Earth-Covered Corrugated Steel Arch Sections
Buster-Jangle 9.1a 35

Semi-Buried Corrugated Steel Arch Sheel Structures
Hardtack 3.2a, b, c, d 189

CROSS REFERENCE INDEX

LOADING-RESPONSE EXPERIMENTAL SYSTEMS

Buried Steel Beam Response Elements
Upshot-Knothole 3.8a, b, c 63

Teapot 3.4a, b, c 91
Plumbbob 3.4a, b, c 132

Buried Flexible Measuring Devices
Teapot 3.3.1 84

Buried Response Cylinders (Drums with Flexible Diaphragms)
Plumbbob 1.7 109
Hardtack 1.9 183

Buried Isolated Response Cylinders
Plumbbob 3.5 137

CROSS REFERENSE INDEX

TEST SUPPORT STATIONS

Massive Reinforced Concrete Semi-Buried Shelter
Ivy Station 200 44
Ivy Station 520 55
Castle Station 200 82
(same station as Ivy Station 200)
Castle Station 1810.05 83
(same station as Ivy Station 520.)
Redwing Station 1311.04 106
Redwing Station 1611 108
(same station as Ivy Station 200)
Plumbbob Station T 3B 174
Plumbbob Station 7-300 177
Plumbbob Station 9-22-6001 180
Hardtack Station 1314 197
(same station as Ivy Station 200)

Reinforced Concrete Semi-Buried Shelter
Ivy Station 252 48
Ivy Station 307 52

Reinforced Concrete Earth-Covered Shelter
Hardtack Station 1311 194

Massive Reinforced Concrete Earth-Covered Shelter
Hardtack Station 1525 198
Hardtack Station 1526 201

MISCELLANEOUS STRUCTURES

Buried Reinforced Concrete Box (Open Top)
Buster-Jangle 3.13 16
Teapot 3.3.2 87

Buried Steel and Reinforced Concrete Cells (Open Top)
Buster-Jangle 3.21 20

Buried Corrugated Iron and Reinforced Concrete Cells (Open Top)
Buster-Jangle 3.22 29

PART I

Summary of Loading and Response Systems

The following material is an enumeration and brief description of each test conducted on underground and earth-covered systems subjected to the effects of nuclear weapons during full-scale test operations conducted from 1951 to 1958. A discussion and correlation of the tests is included as Part 2 of this report.

OPERATION: Greenhouse

PROJECT: 3.1

STRUCTURE IDENTIFICATION: 3.1.3

CROSS REFERENCE INDEX:
EARTH-COVERED AND SEMI-BURIED CONCRETE — Semi-Buried Cast-In-Place Box and Precast Concrete Pipe Sections (as part of composite shelter)
EARTH-COVERED AND SEMI-BURIED STEEL — Corrugated Steel Pipe Sections (as part of composite shelter)

REPORT REFERENCES:
WT-94, WT-116, WT-117, WT-118, WT-641
Defense Atomic Support Agency
Washington 25, D.C.

LOCATION: Janet (Engebi)
Eniwetok Proving Grounds

OBJECTIVES:
To test the response of the structure (3.1.3) to dynamic loads produced by an atomic bomb in order to verify parameters for use in the application of dynamic-plastic theory to the design and evaluation of structures to resist atomic blast.

STRUCTURAL DESCRIPTION:
The buried structure consisted of a poured-in-place reinforced concrete section (Unit A), several precast reinforced concrete sections (Units B, C, and D) and a corrugated metal pipe section (Unit E). The poured-in-place shelter was designed using conservative assumptions for the transmission of the blast force through the earth. The first precast section (Unit B) was designed using the same loading assumptions adopted for the design of the poured-in-place section. The load-carrying capacity of precast Unit C was arbitrarily reduced below that provided in Section B, and the strength of Unit D was further reduced by an arbitrary amount. The corrugated-steel pipe section (Unit E) was a standard steel pipe having such a small load capacity that its use could not be justified on the basis of the assumptions used for the design of the other units. The purpose of the underground test was to determine how to design underground shelters and

to provide information on the transmission of blast pressures through soil.

UNIT A
Solid reinforced concrete, 1'-0" thick
8'-0" high, 8'-0" wide, 18'-0" long
Subdivided by plywood partitions into two air locks

UNIT B
Two 4'-0" reinforced concrete pipe sections
8" thick, 8'-6" I.D.
Reinforcing — 5/8"Ø @ 4" o.c.

UNIT C
Two 4'-0" reinforced concrete pipe sections
8" thick, 8'-6" I.D.
Reinforcing — 3/4"Ø @ 4" o.c.

UNIT D
Two 4'-0" reinforced concrete pipe sections
8" thick, 8'-6" I.D.
Reinforcing — 1/2"Ø @ 6" o.c.

UNIT E
8'-0" long, 10 gage corrugated metal pipe — 7'-0" I.D.
Circumference — 4 pieces lapped 4 3/4" and connected
by two lines of 3/4" round bolts

STRUCTURAL DETAILS:

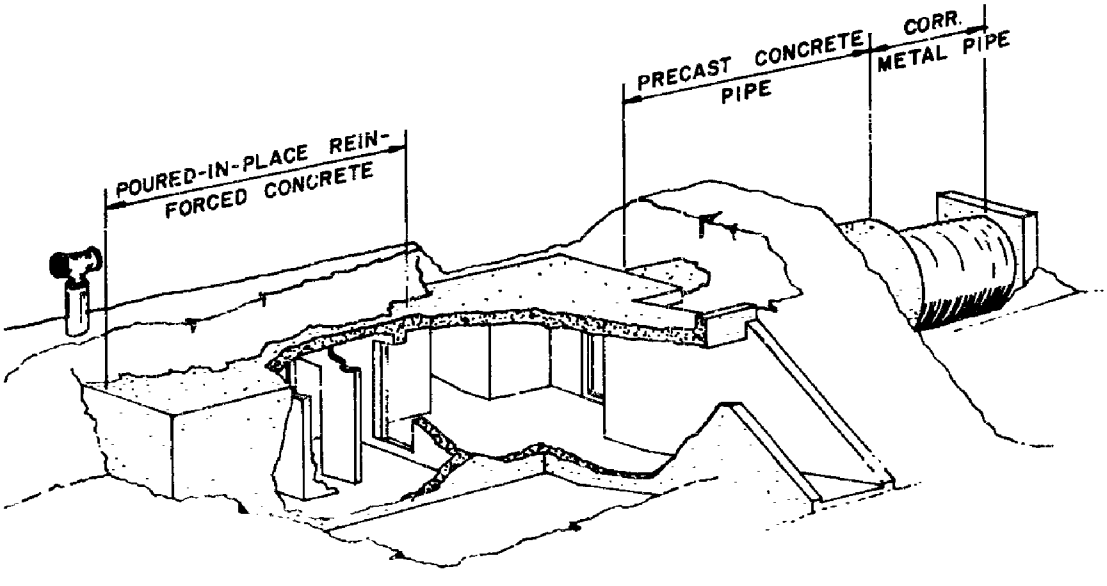

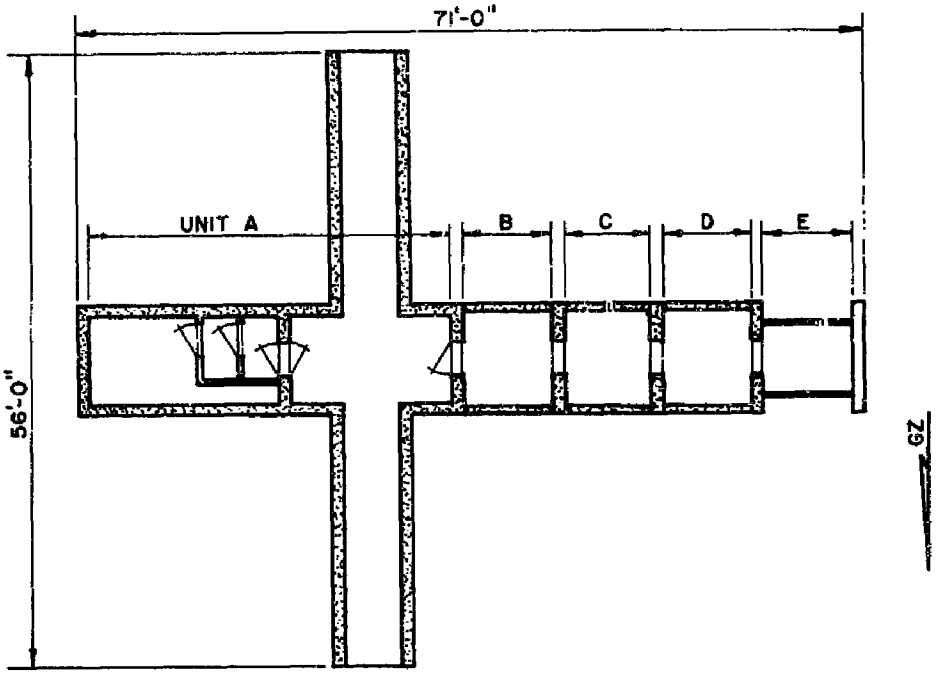

FLOOR PLAN

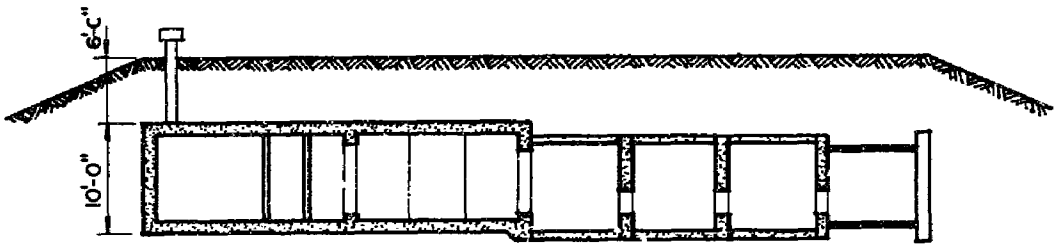

LONGITUDINAL SECTION

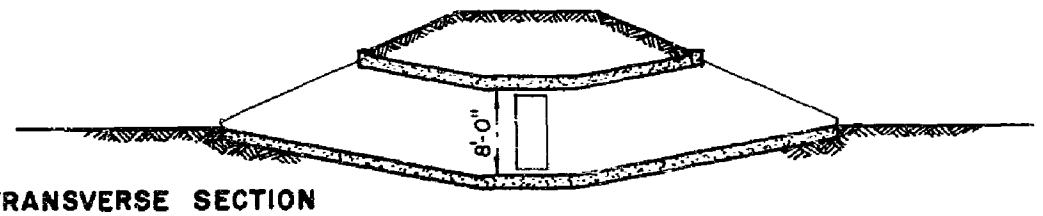

TRANSVERSE SECTION

SOIL CHARACTERISTICS:
Dry sand and gravel to a depth of six feet and loose saturated sand from six feet to twenty-five feet.

PREVIOUS TESTING: None

SHOT:

Name:	"Easy"
Type:	Tower
Yield:	46.7 KT
Height of Burst:	300 feet
Date:	20 April 1951

TEST LAYOUT:

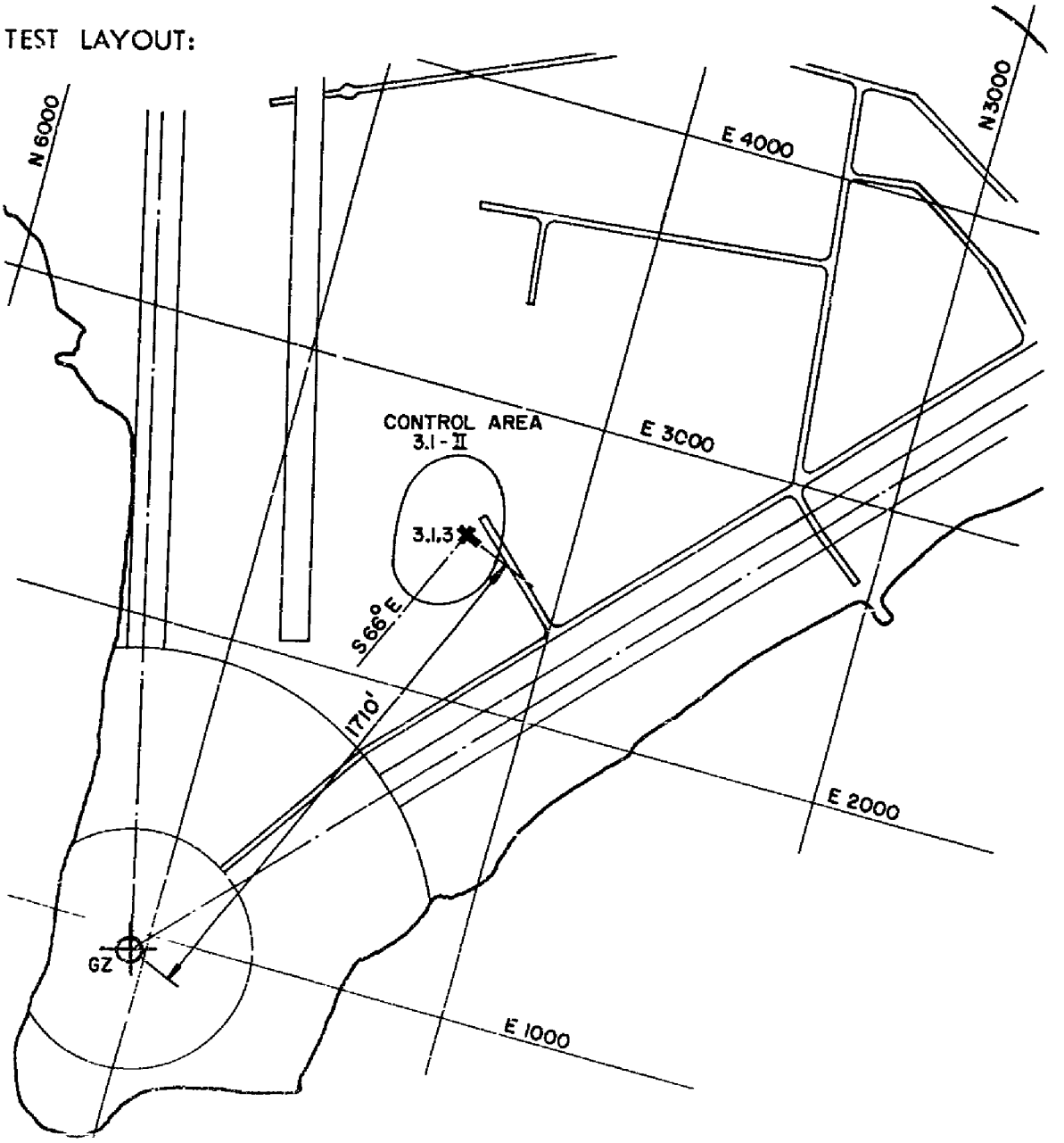

LOADING:
Shot "Easy": (Overpressure on earch surface)

Peak Overpressure:	60 psi
Duration:	300 msec

SUMMARY:
There was insignificant damage for shot "Easy"

The cast-in-place section consisted of a box with one-foot-thick reinforced-concrete members for the walls, roof, and floor. This portion of the structure was designed to act elastically under full theoretical air blast pressure. As expected, this unit showed no evidence of plastic deformation, and it would have afforded complete protection to personnel inside it during the explosion.

The three precast sections were designed with varying strengths in an attempt ti insure plastic action in at least one of them. None of these precast sections suffered damage that could be determined by visual inspection.

In spite of the very light metal used in the corrugated pipe section of the shelter, no permanent plastic deformations were observed.

OTHER REMARKS:
Sections of the underground structure were provided with different strengths ranging from that required for full air blast pressure to arbitrarily weaker sections designed to anticipate larger plastic deflections or failure. It can be assumed from the absence of damage or large distortions in the weaker sections of the underground test structures, that the effective pressures exerted against the underground structures were much less than expected; and that the actual conditions regarding arch action, shear strength, and behavior of soil were significantly different from the pre-test analysis assumptions.

SUBSEQUENT TESTING:
During Operation Ivy, this structure was subjected to air blast overpressures from shots "Mike" and "King". WT-641 contains a description of damage:
Shot:

Name:	"Mike"	"King"
Type:	Tower	Air
Yield:	14 MT	---
Height of Burst:	20 feet	1480 feet
Date:	31 Oct 1952	15 Nov 1952
Range:	17,060 feet	54,600 feet
Overpressure:	18 psi	0.42 psi

Remarks: Structurally undamaged, surface on vent pipe charred on side facing GZ, doors removed prior to test, wood-frame air lock destroyed.

OPERATION: Greenhouse

PROJECT: 3.2

STRUCTURE IDENTIFICATION: 3.2.4a

CROSS REFERENCE INDEX:
EARTH-COVERED AND SEMI-BURIED CONCRETE — Semi-Buried Precast Concrete Magazine (Gable)

REPORT REFERENCES:
WT-23, WT-24, WT-91, WT-117
Defense Atomic Support Agency
Washington 25, D.C.

LOCATION: Janet (Engebi)
Eniwetok Proving Grounds

OBJECTIVES:
To test the design of an earth-covered precast-concrete structure for use as a magazine, storage, or personnel shelter; to obtain a comparison of the performance of an earth-covered structure with an uncovered structure (Greenhouse 3.2.4b).

STRUCTURAL DESCRIPTION:
Structure 3.2.4a was a precast-concrete magazine of rigid frame panels with two feet of earth cover.

STRUCTURAL DETAILS:

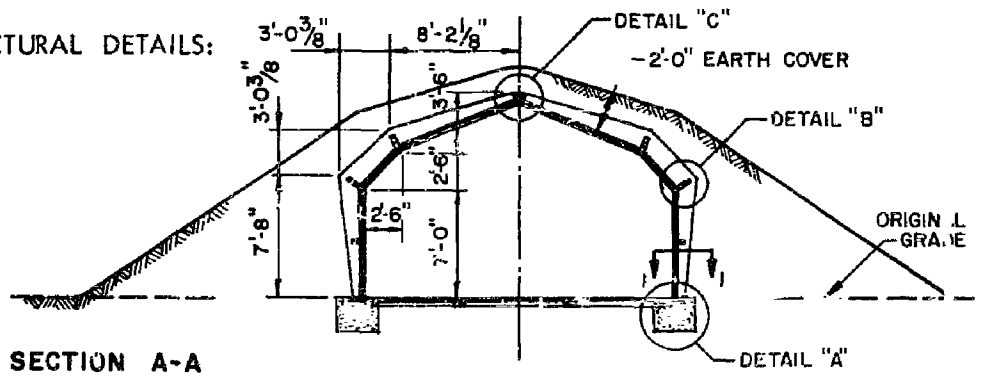

SECTION A-A

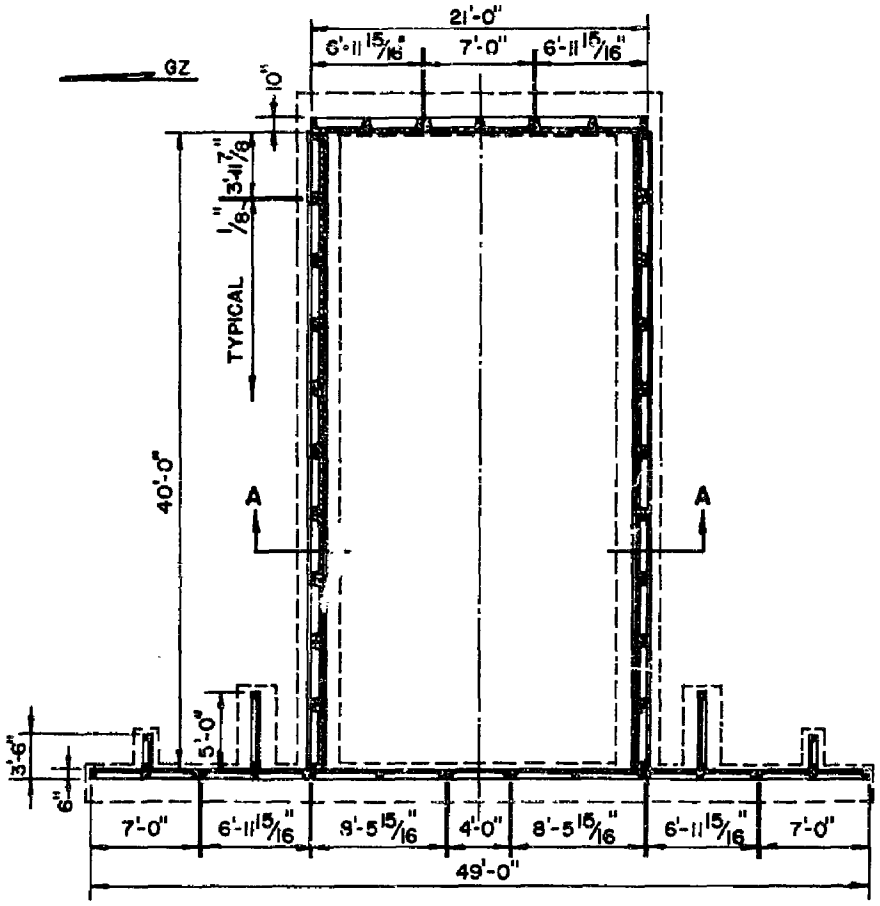

PLAN

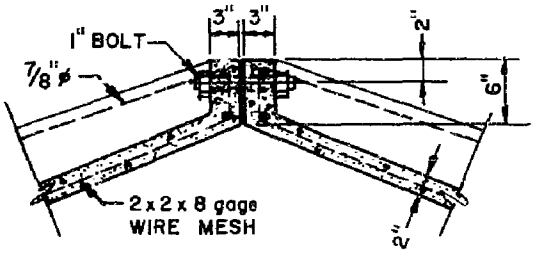

DETAIL "C"

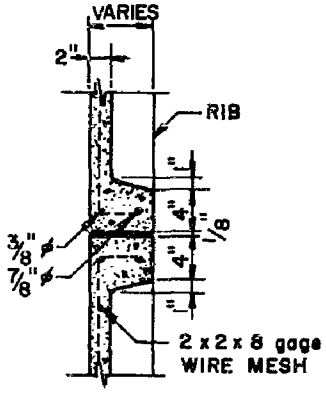

SECTION 1-1

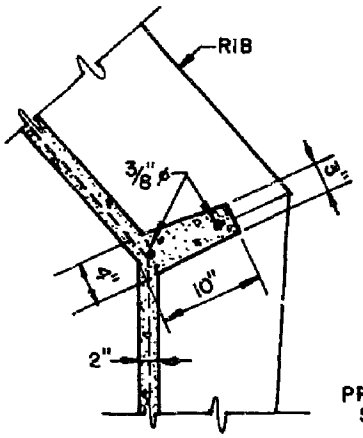

DETAIL "B"

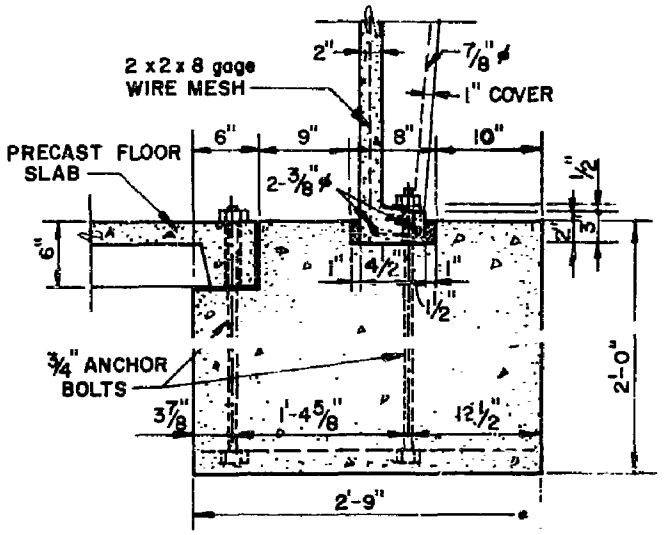

DETAIL "A"

SOIL CHARACTERISTICS:
Sand overburden to a depth of five feet, conglomerate from five feet to six feet, and loose sand and coarse gravel from six feet to sixteen feet.

PREVIOUS TESTING: None

SHOT:

Name:	"Easy"
Type:	Tower
Yield:	46.7 KT
Height of Burst:	300 feet
Date:	20 April 1951

TEST LAYOUT:

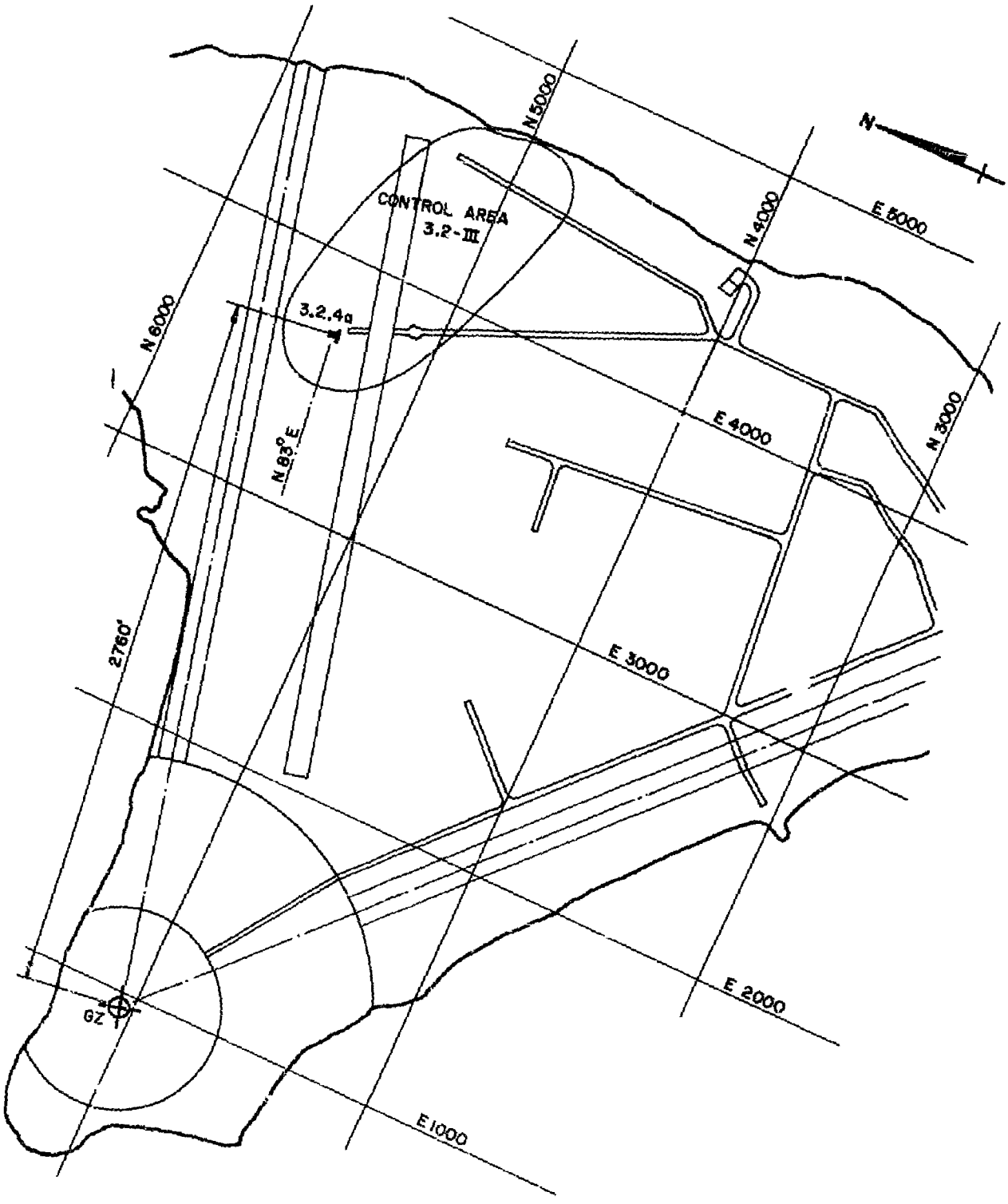
N
N 5000
N 4000
N 6000
N 3000
E 5000
E 4000
E 3000
E 2000
E 1000
CONTROL AREA
3.2-III
3.2.4a
N 83° E
2760'
GZ

LOADING:
Shot "Easy": (Predicted peak overpressure of 20 psi)
Main Pulse:
Side-on Overpressure: 14.5 psi
Rise Time: 109 msec

SUMMARY:
It was predicted that greatest damage would occur in frames at the crown of the roof. Cracks at haunches were anticipated.

The earth cover on Structure 3.2.4a, especially the heavy embankments against the vertical faces of the side walls, caused the structure to respond in a manner slightly different from the predictions. It was thought that the pressure loading would produce a response similar to that obtained in an uncovered arch type structure, namely a slight flattening out of the windward panels with tension stresses on the inside and compressive stresses on the outside, as well as a tendency to squash the leeward panels with tension on the outside and compression on the inside. However, the flat sloping roof portion of the windward panels received a heavier load than the vertical face; and the sloping portion attempted to move downward, introducing large moments at the knee of the panel with consequent cracks on the outside of the knee and none on the inside. On the leeward wall panels, tension cracks appeared on the inside face near the base and also at the fold lines. The end panels that remained in place developed shear stresses and cracks, as predicted, and to just about the extent predicted.

OTHER REMARKS:
A companion structure (3.2.4b) without earth cover subjected to 11.0 psi suffered complete collapse of the end walls. The rear and center panels of both end walls failed and were hurled to the center of the building. The front panels of each end wall were damaged beyond effective use, but were still in place with large deflections. The end wall panels adjacent to the windward side of the building received medium damage in those panels having ribs outward. The panels having skin outward were damaged only in the rib, this damage being moderate. The rear panels sustained minor cracking.

SUBSEQUENT TESTING:
Similar structures were tested in Operation Upshot-Knothole Project 3.13 (WT -729). See text page 67.

OPERATION: Greenhouse

PROJECT: 3.2

STRUCTURE IDENTIFICATION: 3.2.6

CROSS REFERENCE INDEX:
EARTH-COVERED AND SEMI-BURIED CONCRETE — Semi-Buried Precast Concrete Magazine (Dome)

REPORT REFERENCES:
WT-23, WT-24, WT-91, WT-117
Defense Atomic Support Agency
Washington 25, D.C.

LOCATION: Janet (Engebi)
Eniwetok Proving Grounds

OBJECTIVES:
To test the design of an earth-covered precast-concrete dome structure for use as a magazine or personnel shelter.

STRUCTURAL DESCRIPTION:
Structure 3.2.6 was a dome shaped precast-concrete Navy magazine with two feet of earth cover.

STRUCTURAL DETAILS:

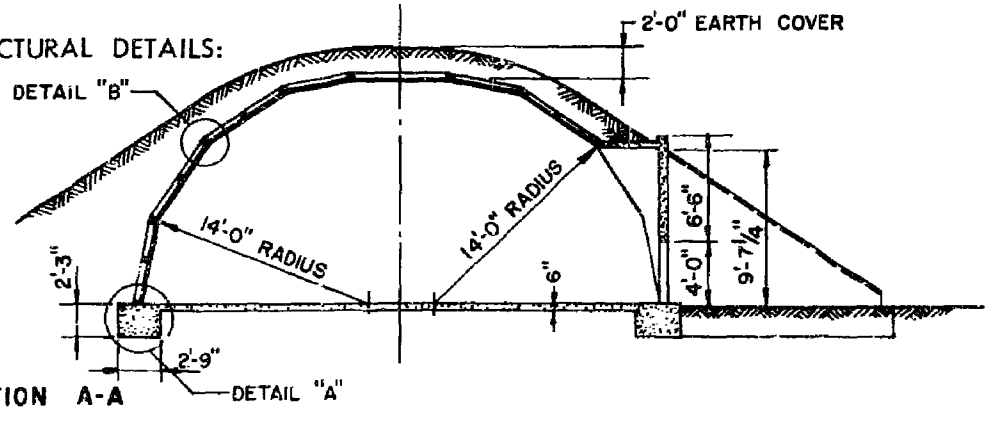

SECTION A-A

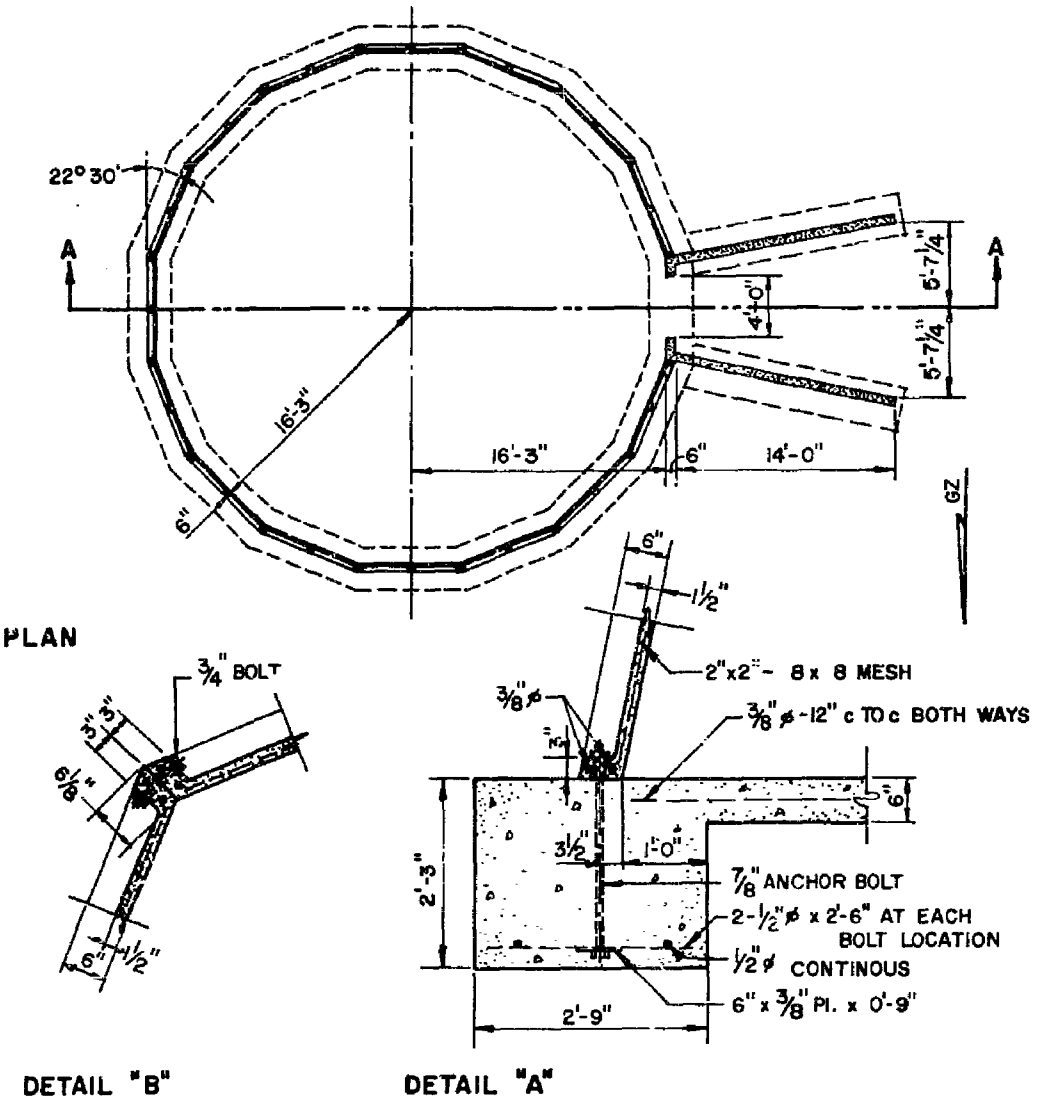

SOIL CHARACTERISTICS:
Loose fine sand to a depth of 12 feet; compacted coarse gravel and coral from 12 feet to 14 feet; and loose sand, gravel, and coral from 14 feet to 24 feet.

PREVIOUS TESTING: None

SHOT:

Name:	"Easy"
Type:	Tower
Yield:	46.7 KT
Height of Burst:	300 feet
Date:	20 April 1951

TEST LAYOUT:

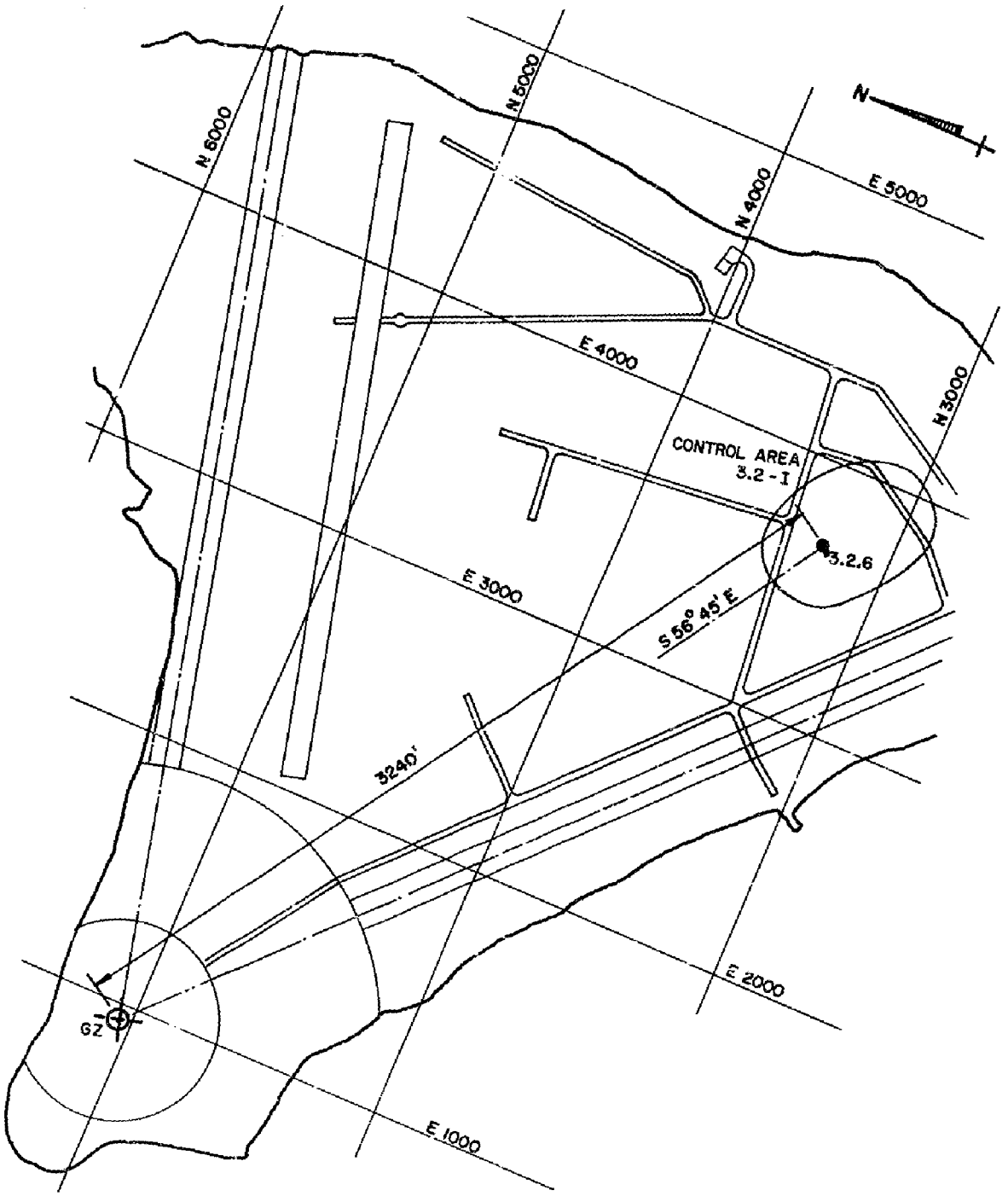
N
N 6000
N 5000
N 4000
N 3000
E 5000
E 4000
E 3000
E 2000
E 1000
CONTROL AREA
3.2 - I
3.2.6
S 56° 45' E
3240'
GZ

LOADING:

Shot "Easy": (Predicted peak overpressure of 14.5 psi)

Main Pulse:

Side-on Overpressure: 12 psi

Rise Time: 40 msec

SUMMARY:

The structure suffered only minor damage (permanent vertical deformations of 3/4" maximum) under the applied loading. Slight displacement of panels occurred relative to each other. Most of the earth cover remained in place; however, the middle section of the earth was thrown out. The door to the structure was slightly deformed, but the wing walls were undamaged. Failure in the panels of this structure was limited to a plastic change at some joints. Irregularities in casting and shrinkage caused the panels to bear on each other at the corners. Further, column action of the ribs in the vertical plane during vertical deflection and of the ribs in the horizontal plane during wracking caused plastic strains at the intersections.

OTHER REMARKS:

There was no attenuation of pressure in the two feet of cover on top of Structure 3.2.6. However, decreased pressures were observed on the walls, depending upon amount of cover.

SUBSEQUENT TESTING:

This particular structure was uncovered and subjected to similar loading during Shot "Item". Similar conditions of range and pressures existed; however, the structure was severely damaged. Four of the lower panels on the side of the structure facing the shot were demolished.

OPERATION: Buster-Jangle

PROJECT: 3.2

STRUCTURE IDENTIFICATION: 3.13

CROSS REFERENCE INDEX:
MISCELLANEOUS STRUCTURES — Buried Reinfc ced Concrete Box (Open Top)

REPORT REFERENCE:
WT-387
Defense Atomic Support Agency
Washington 25, D.C.

LOCATION: Yucca Flat
Nevada Test Site

OBJECTIVES:
To provide data for the analysis and design of heavy underground structures to resist impulsive loads.

STRUCTURAL DESCRIPTION:
Structure 3.13 was a buried reinforced concrete open box designed to resist high earth pressures on its front and rear walls. The outside dimensions were 25 feet by 25 feet, and the front and rear walls were 5 feet thick. The top of the structure was placed 7.5 feet below ground level.

STRUCTURAL DETAILS: (See Page 17)

SOIL CHARACTERISTICS:
The natural soil consisted of a conglomerate referred to as "caliche". The moisture content was negligible. The average density of the undisturbed soil was 95 pcf; and after compaction, the average density was 103 pcf.

STRUCTURAL DETAILS:

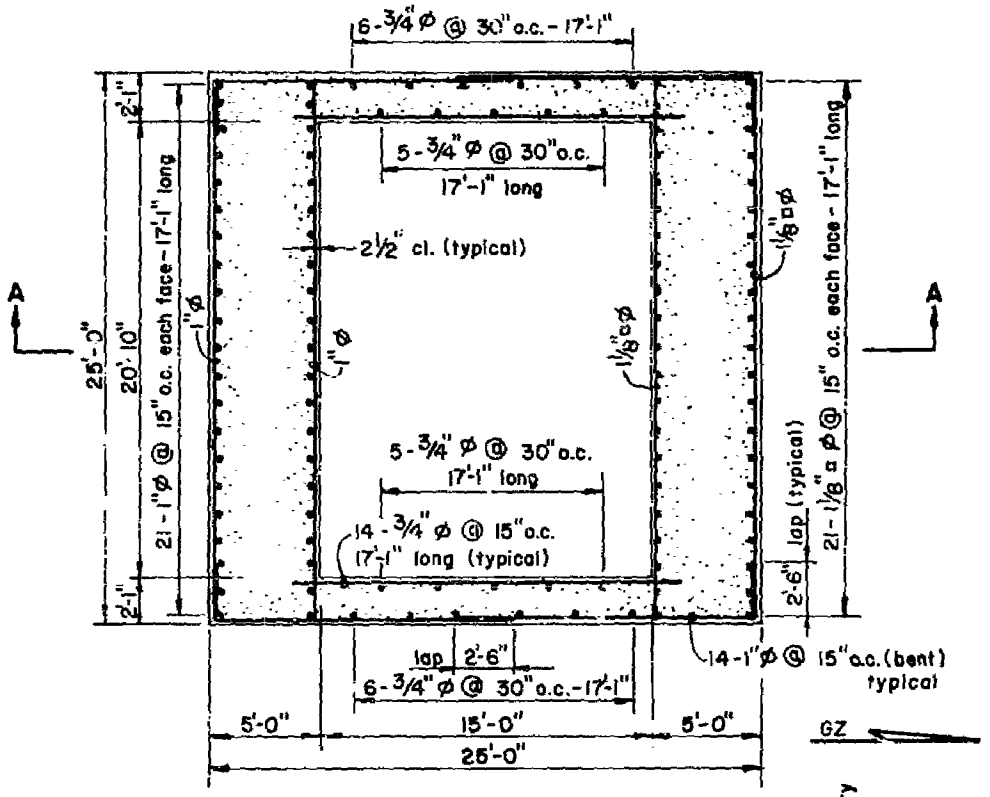

PLAN

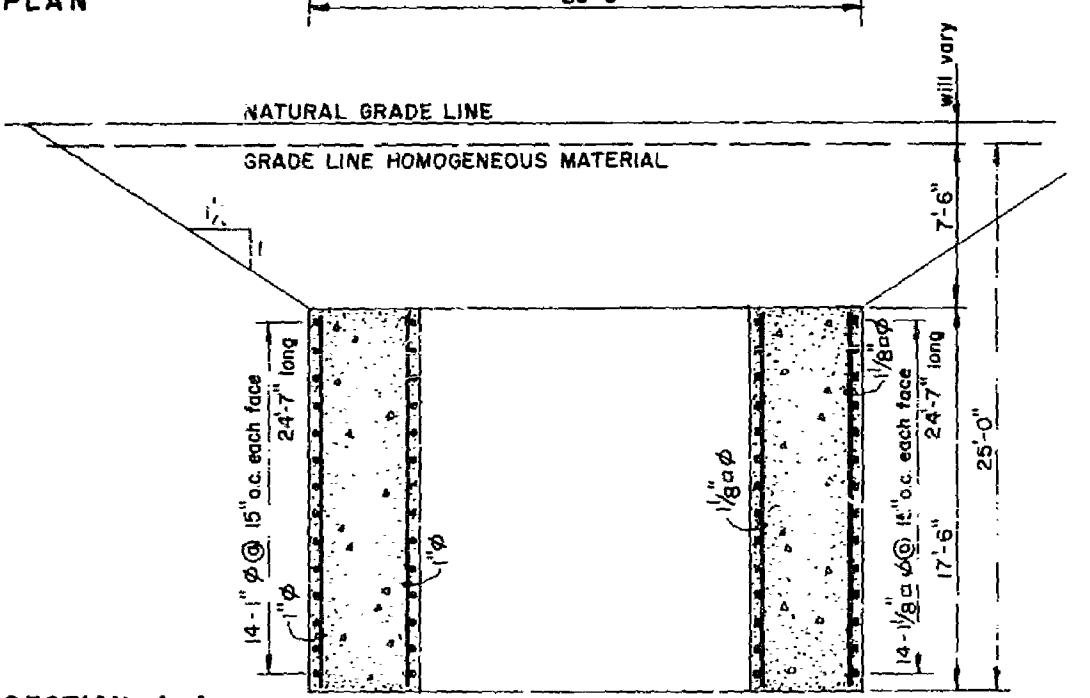

SECTION A-A

PREVIOUS TESTING:
A similar but not identical structure was tested at Dugway Proving Ground, Utah. The Dugway structure had a 3 feet 4 inch thick rear wall. However, this was thickened for Operation Jangle because the rear wall failed in the Dugway test.

SHOT:

Name:	"Uncle"
Type:	Underground
Yield:	1.2 KT
Depth of Burst:	17 feet—scaled depth — $\lambda_c = 0.13$
Date:	29 Nov 1951

TEST LAYOUT:

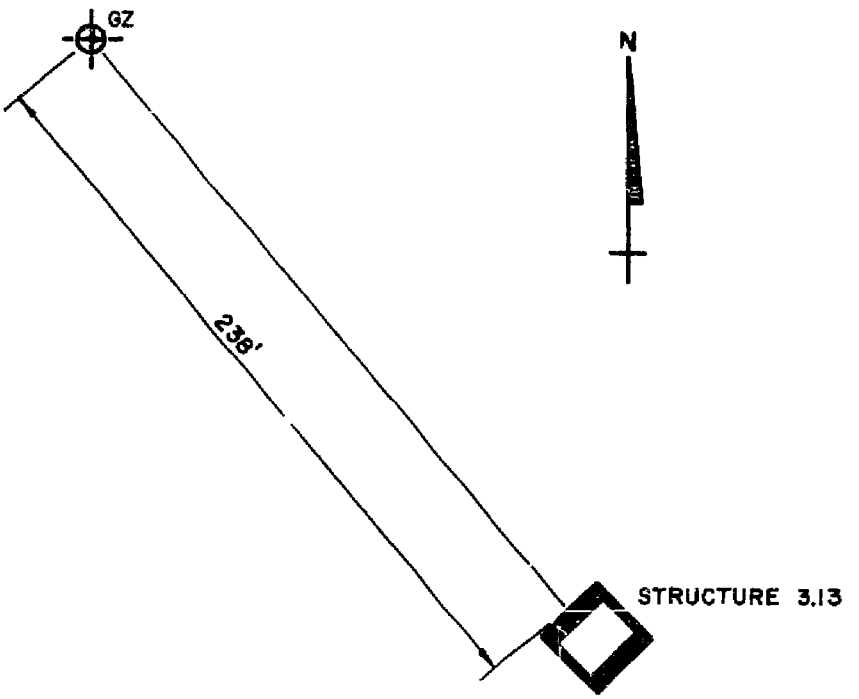

LOADING:
Shot "Uncle":

No air pressure measured
Earth pressure ~ too low for measurable structural response

SUMMARY:
The buried concrete box structure was placed at the same scaled distance as for a similar structure at the full scale dry clay test at Dugway, Utah. A similar one in the latter test was severely damaged, and it was suggested that placing it at the same scaled distance in the Jangle test would cause moderate damage to the structure. Authoritative predictions of the crater size were not available prior to construction; so no attempt was made to place this structure adjacent to the crater, which would have resulted in significant damage, as demonstrated by the Dugway tests.

The structure was undamaged.

OTHER REMARKS:
The structure was instrumented to measure load and response. Unfortunately, most of the transient records were lost due to a recorder failure. In addition, the structure responded essentially elastically so that little positive information was obtained from the permanent measurements.

SUBSEQUENT TESTING:
Two structures of this type, but of different dimensions were included in Operation Teapot, Project 3.3.2 (WT-1126). (See text page 87.)

OPERATION: Buster-Jangle

PROJECT: 3.3

STRUCTURE IDENTIFICATION:
3.21 a1, 3.21 b1, 3.21 c1, 3.21 d1, 3.21 e1, 3.21 f1, 3.21 a2, 3.21 b2, 3.21 c2, 3.21 d2, 3.21 e2, 3.21 f2

CROSS REFERENCE INDEX:
MISCELLANEOUS STRUCTURES — Buried Steel and Reinforced Concrete Cells (Open Top)

REPORT REFERENCES:
WT-405, Vol. I
Defense Atomic Support Agency
Washington 25, D.C.

LOCATION: Yucca Flat
Nevada Test Site

OBJECTIVES:
To obtain a quantitative estimate of the damage which would be sustained by submerged cellular structures of square or rectangular design as a result of an underground explosion and to determine whether such structures are satisfactory for use as underground protective shelters.

STRUCTURAL DESCRIPTION:
Six pairs of square cells were constructed for the Operation (3.21 a1 and 3.21 a2 through 3.21 f1 and 3.21 f2). Cells 3.21 a1 through 3.21 f1 were all 850 feet from ground zero, while cells 3.21 a2 through 3.21 f2 were 725 feet from ground zero. All cells were the same height, 8 feet, and all were placed with their upper ends flush with the ground surface. Wall thickness was the same for a given cell, and remained constant with depth. Structures 3.21 a1 and 3.21 a2 were made of 12 gage sheet steel while the remaining cells were constructed of reinforced concrete.

STRUCTURAL DETAILS:

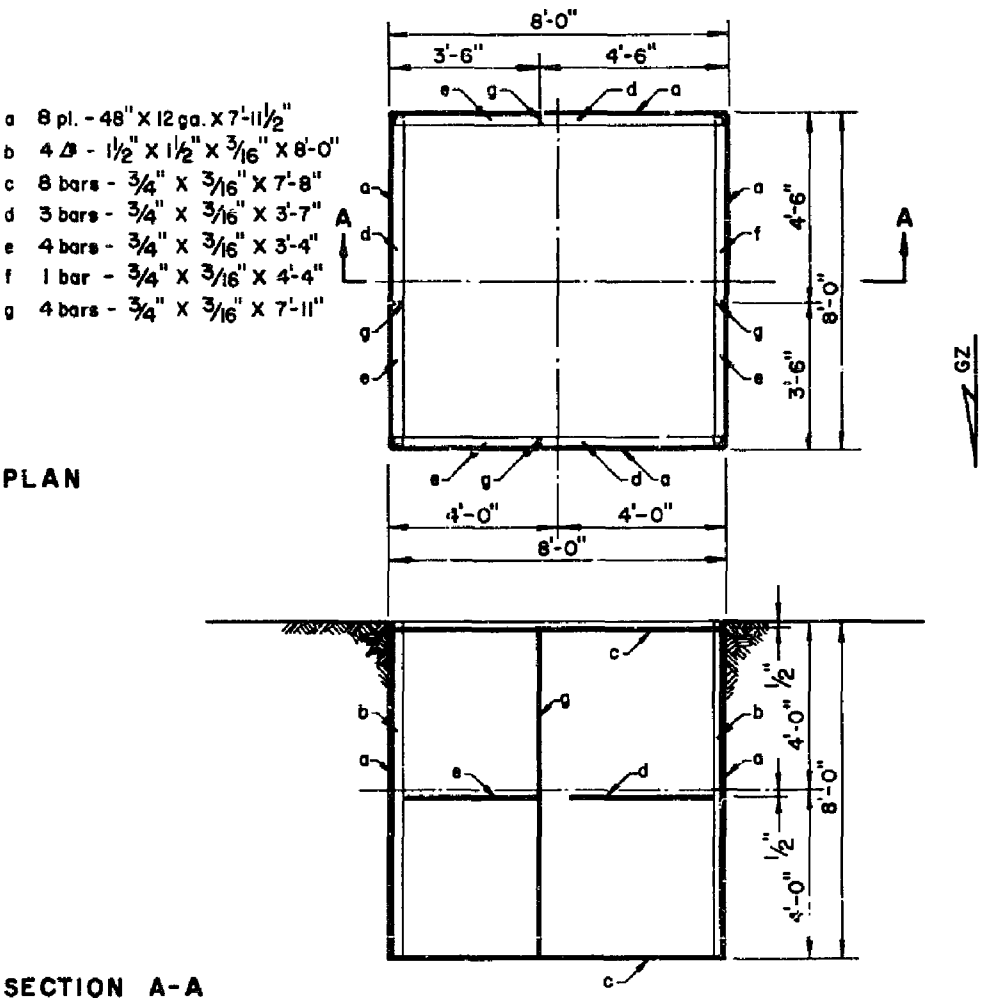

3.21 a1 and a2 — Light Metal Steel Cell

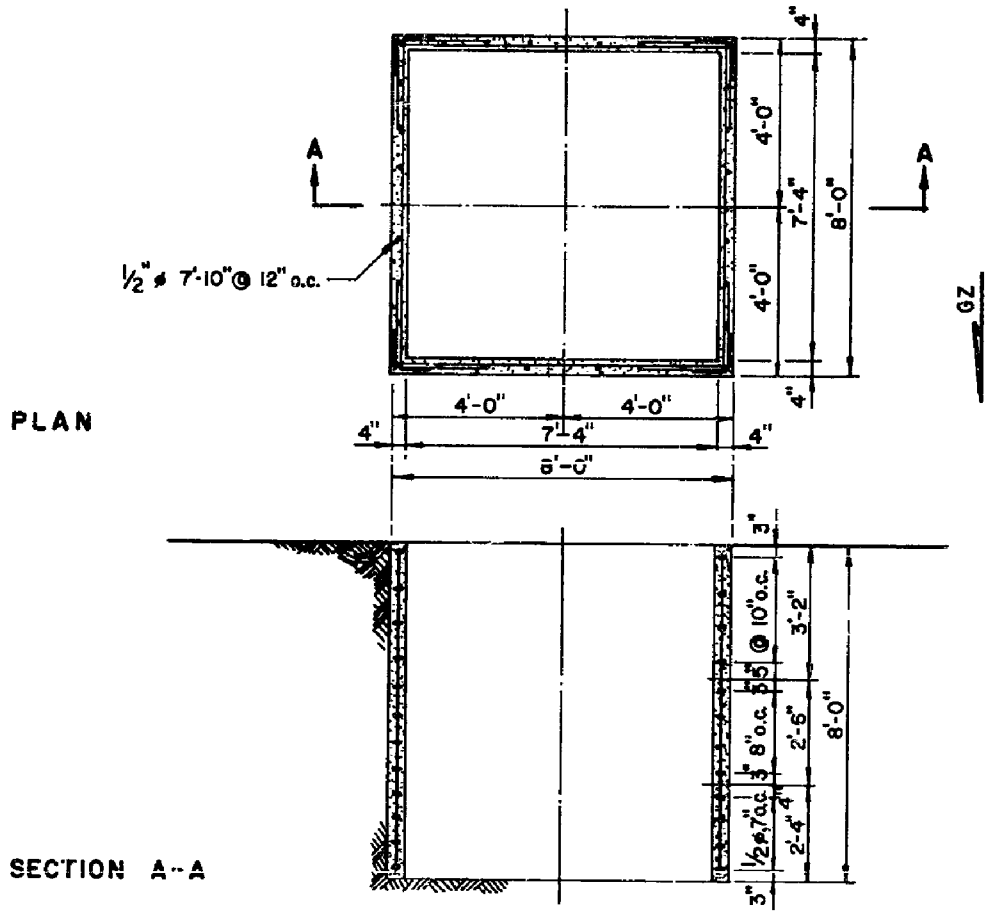

3.21 b1 and b2 — Reinforced Concrete Cell

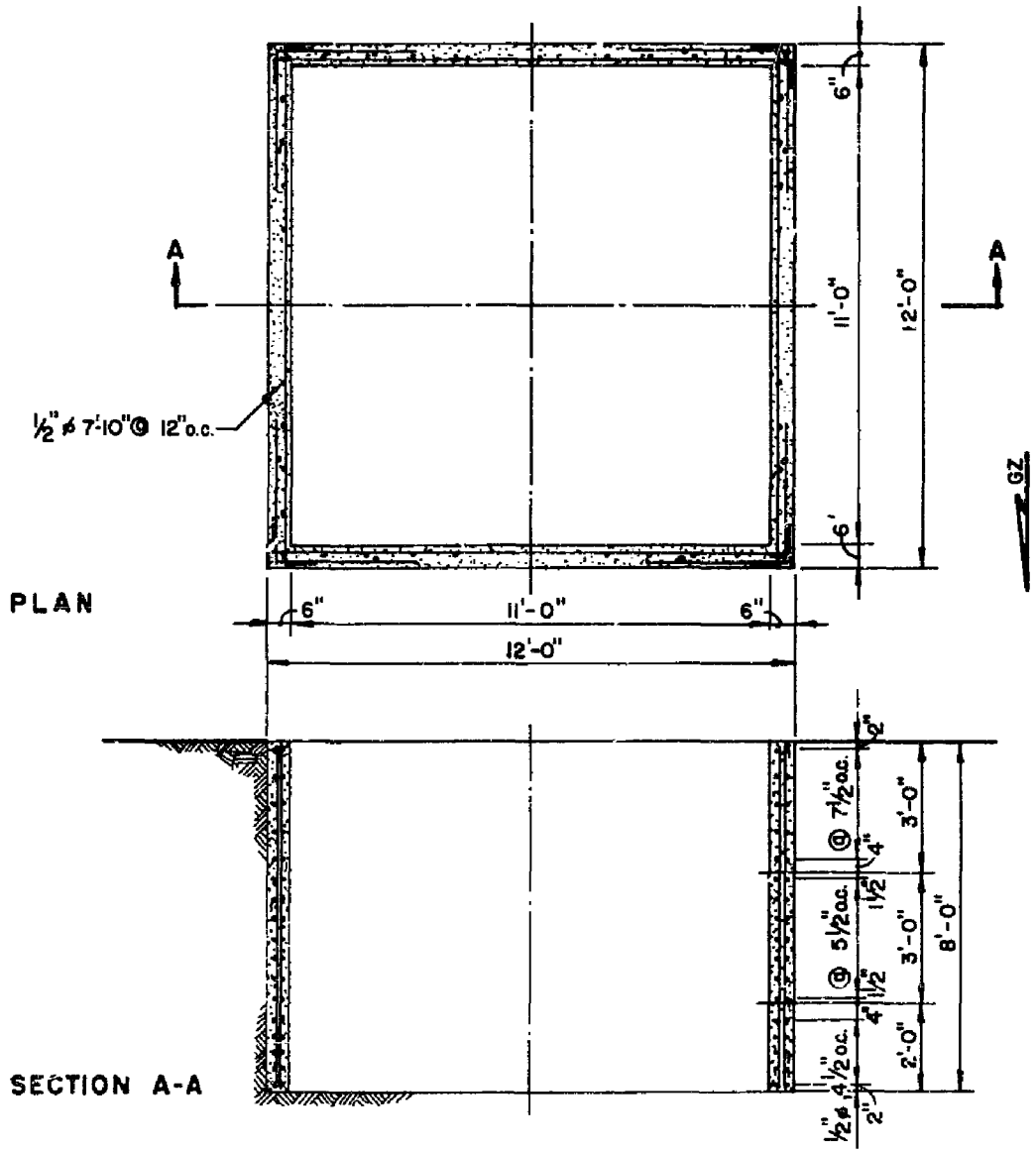

3.21 c1 and c2 — Reinforced Concrete Cell

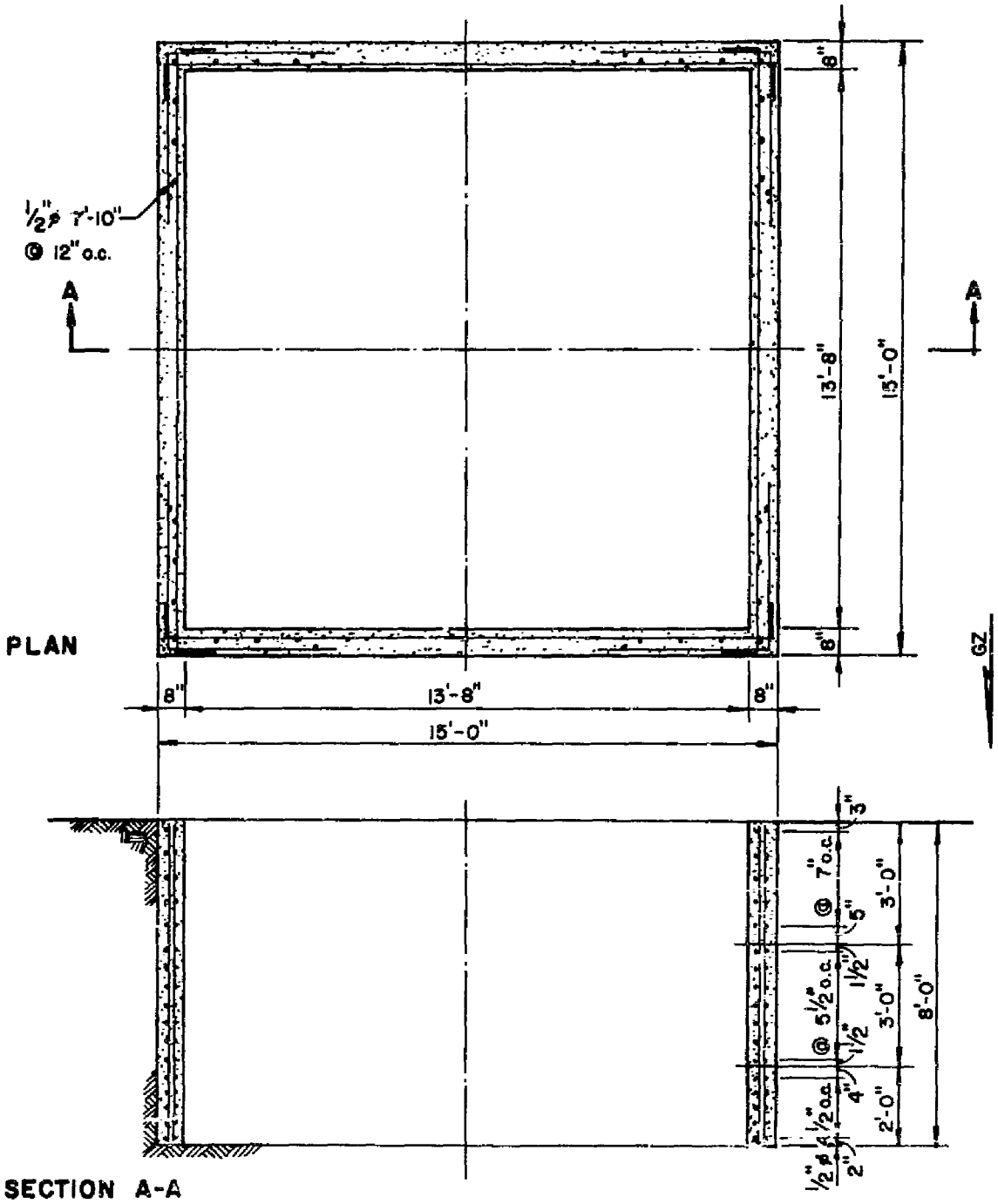

3.21 d1 and d2 — Reinforced Concrete Cell

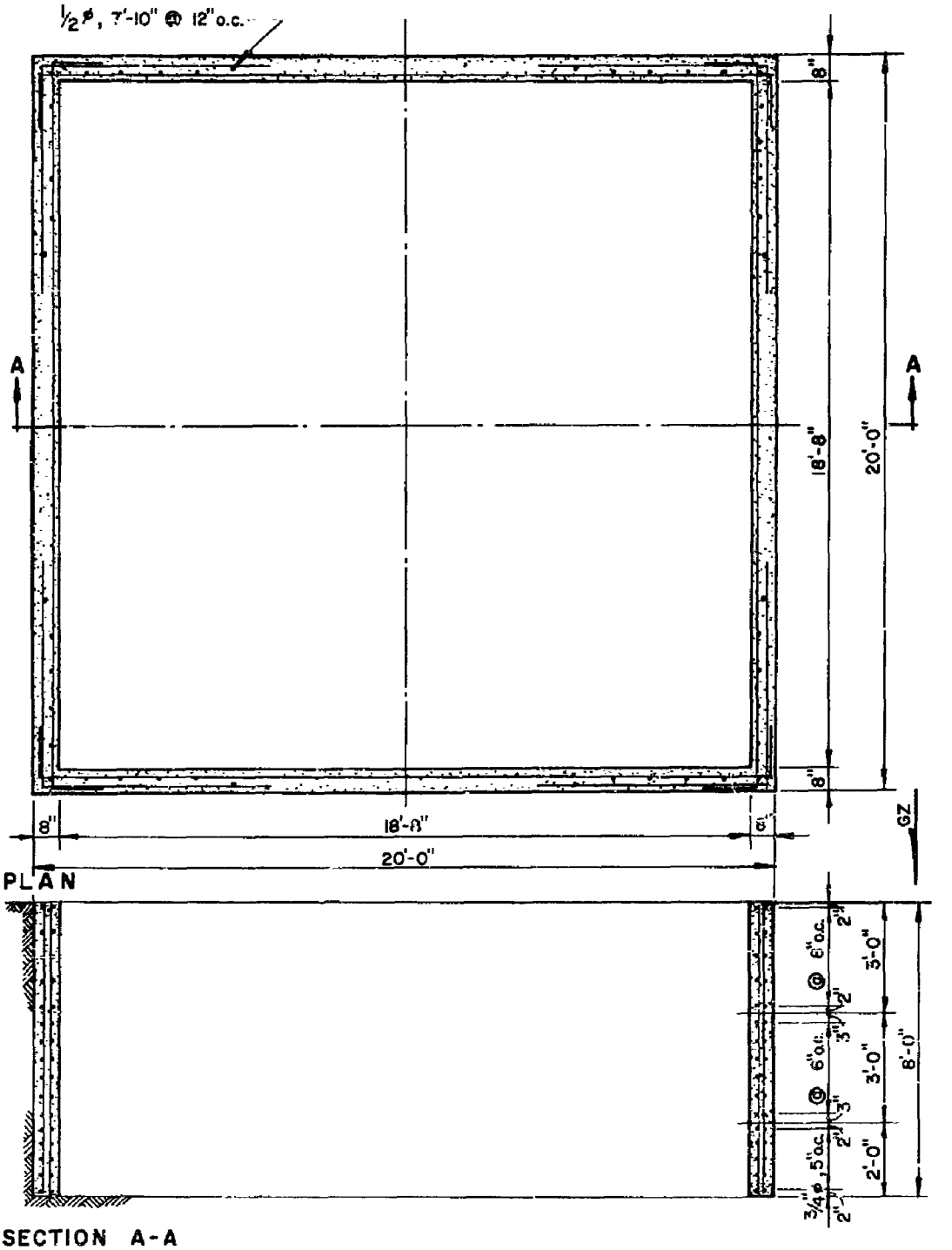

3.21 e1 and e2 — Reinforced Concrete Cell

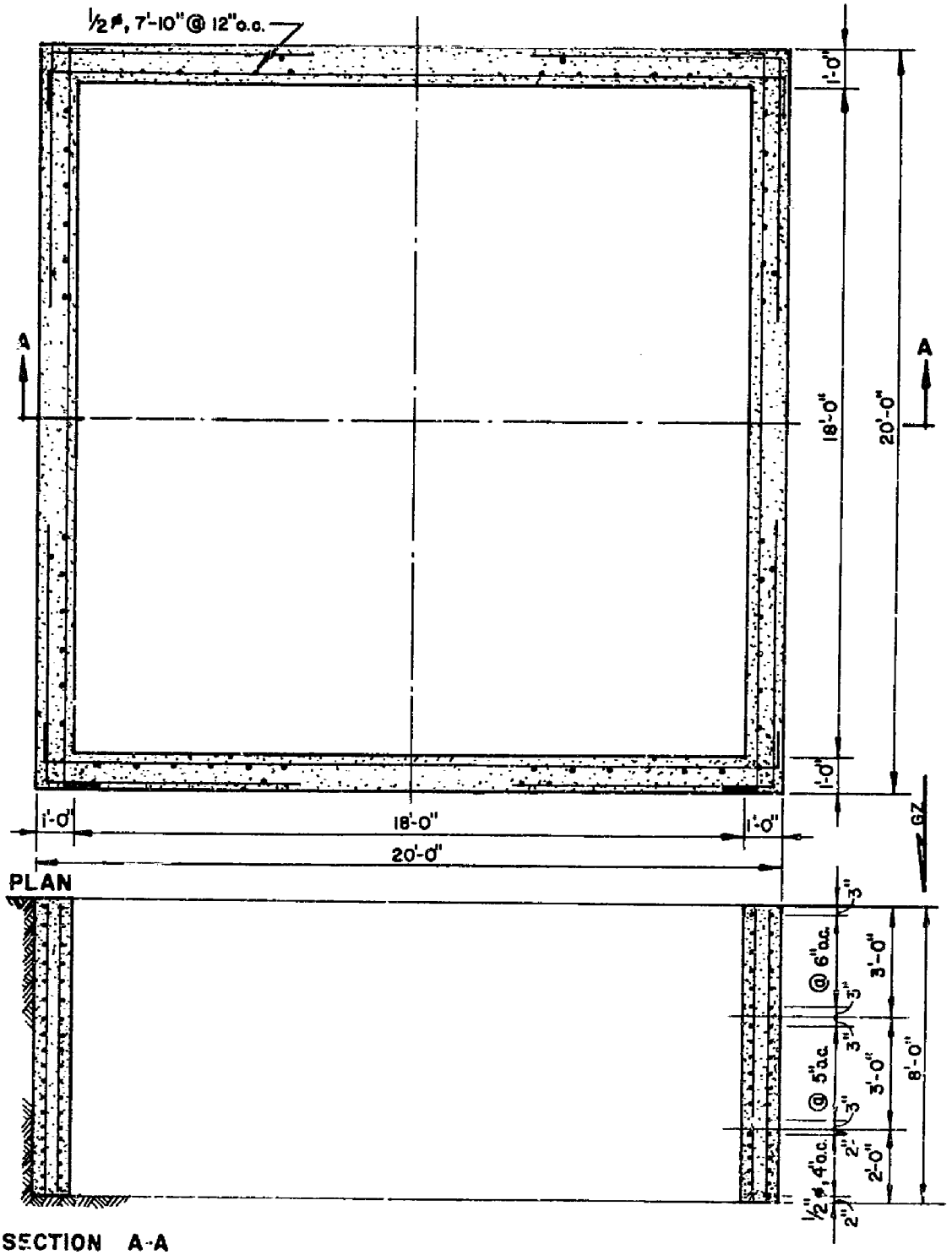

3.21 f1 and f2 — Reinforced Concrete Cell

SOIL CHARACTERISTICS:
Visual inspection of several open cuts at the test site showed a wide range in the grain size of the soil. Alternate bands of coarse gravel and graded sand were seen to extend from the surface to a depth of 12 to 15 feet. At this depth there was a band of caliche. There is a wide range in soil grain size within the rather shallow depth of 10 feet.

PREVIOUS TESTING: None

SHOT:

Name:	"Uncle"
Type:	Underground
Yield:	1.2 KT
Depth of Burst:	17 feet
Date:	29 Nov 1951

TEST LAYOUT:
Structures 3.21 a1, 3.21 b1, 3.21 c1, 3.21 d1, 3.21 e1 and 3.21 f1 were all 850 feet from ground zero. Structures 3.21 a2, 3.21 b2, 3.21 c2, 3.21 d2, 3.21 e2 and 3.21 f2 were 725 feet from ground zero. Each structure was aligned with its front face perpendicular to a ray extending from ground zero.

LOADING:
On about 80 percent of the records there is almost no evidence of ground-transmitted earth pressure. Even the few traces which can be identified as ground-transmitted pressure do not exhibit properties characteristic of a propagating wave.

SUMMARY:
The structures were instrumented to measure earth pressures, radial accelerations, vertical accelerations, and displacements (relative between front and rear walls).

It was predicted that the cells located at 725 feet would sustain considerable damage, while those at 850 feet would be damaged very little.

No damage to the concrete cells resulted from either ground or air blast and the ground shock was only a small fraction of its predicted value.

The walls of the metal cells were observed to have bowed inward as much as 9 inches at the top and 4 inches at the center. However, considerable difficulty was encountered during the construction period in attempting to keep the cells from deflecting excessively under the static soil pressures and it was not possible to determine, by visual examination alone, what portion of the observed displacement was caused by the explosion.

OTHER REMARKS:
Pressure records show that the earth loads which result from impingement of a ground-transmitted disturbance may be wholly inconsequential. The nature of the medium and

the depth and dynamic properties of the disturbing source can greatly affect the characteristics of the propagation. Under conditions of burial depth, energy yield, and soil type approximating this experiment, it is safe to conclude that shallow buried reinforced concrete cells will remain undamaged unless they are near the source.

Pressure loads were so low that even structures far weaker than the square cells would have sustained no damage.

SUBSEQUENT TESTING: None

OPERATION: Buster-Jangle

PROJECT: 3.3

STRUCTURE IDENTIFICATION: 3.22 a1, 3.22 a2, 3.22 b1, 3.22 b2

CROSS REFERENCE INDEX:
MISCELLANEOUS STRUCTURES — Buried Corrugated Iron and Reinforced Concrete Cells (Open Top)

REPORT REFERENCES:
WT-405, Vol. I
Defense Atomic Support Agency
Washington 25, D.C.

LOCATION: Yucca Flat
Nevada Test Site

OBJECTIVES:
To furnish information on the vulnerability of tunnels, subways, underground conduits, piping, etc., to loads imposed by underground explosions and to determine the suitability of structures of circular design for use as protective shelters.

STRUCTURAL DESCRIPTION:
Four circular cells and three tunnel sections were constructed for the operation. Three of the circular cells had 6 inch thick concrete walls, doubly reinforced. The fourth was made of 8 gage corrugated steel sheet. All cells were oriented with their longitudinal axis vertical and had heights and outside diameters of equal dimensions, 10 feet.

STRUCTURAL DETAILS: (See Page 30)

SOIL CHARACTERISTICS:
Visual inspection of several open cuts at the test site showed a wide range in the grain size of the soil. Alternate bands of coarse gravel and graded sand were seen to extend from the surface to a depth of 12 to 15 feet. At this depth there was a band of caliche. There is a wide range in soil grain size within the rather shallow depth of 10 feet.

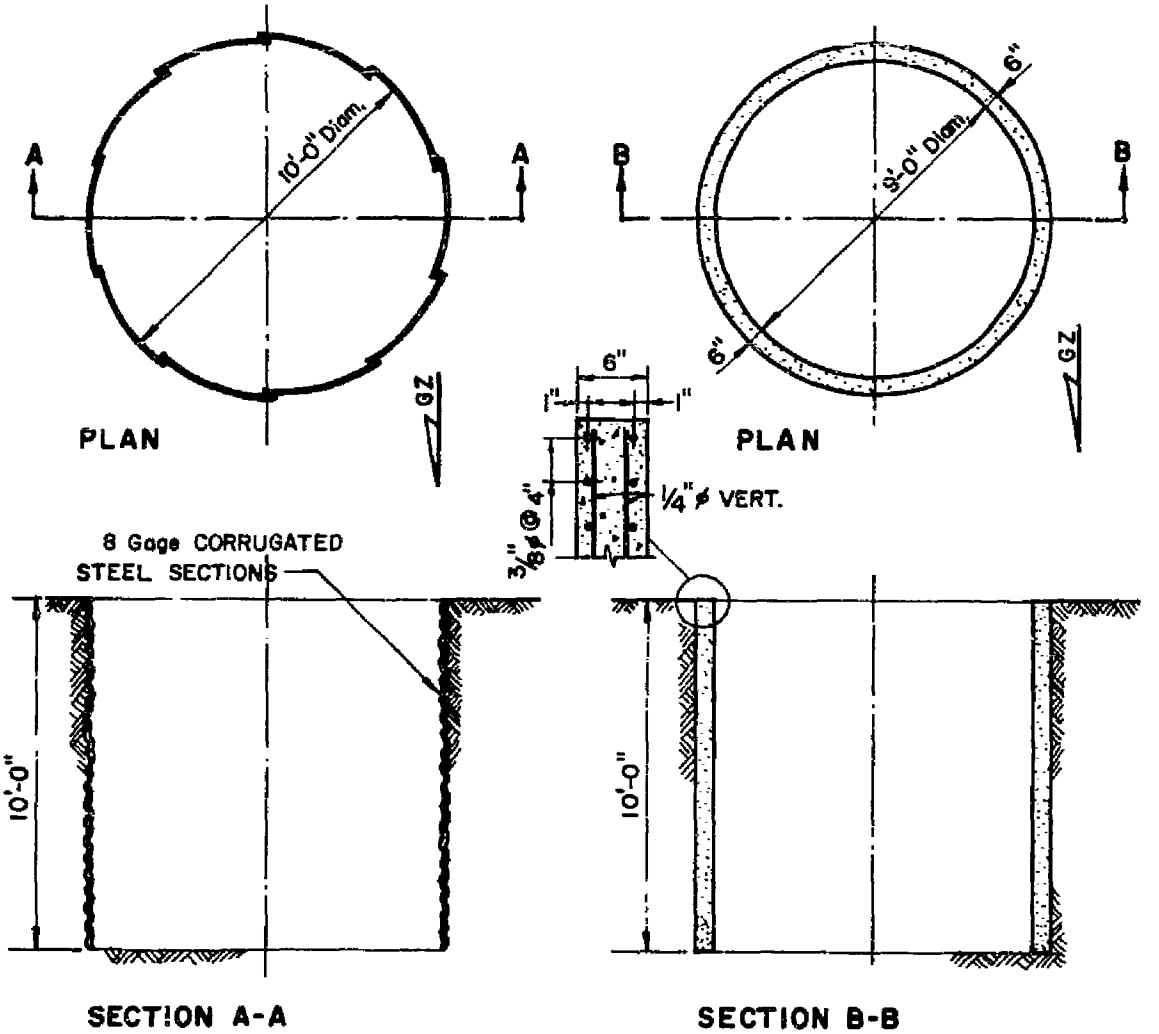

3.22 a — Corrugated Steel Shell

3.22 b — Reinforced Concrete Cell

PREVIOUS TESTING: None

SHOT:

Name:	"Uncle"
Type:	Underground
Yield:	1.2 KT
Depth of Burst:	17 feet
Date:	29 Nov 1951

TEST LAYOUT:

Details of Circular Cells

structure	material	radial distance from explosion (feet)	depth of earth covering structure (feet)
3.22 a1	Corrugated Steel	375	
3.22 a2	Corrugated Steel	525	None (upper end of
3.22 b1	Reinforced Concrete	525	3.22 cells flush with
3.22 b2	Reinforced Concrete	375	surface)

LOADING:
The earth pressure records indicate the total absence of an earth pressure wave.

SUMMARY:
The cells sustained no structural damage.

SUBSEQUENT TESTING: None

OPERATION: Buster-Jangle

PROJECT: 3.3

STRUCTURE IDENTIFICATION: 3.23 a, 3.23 b

CROSS REFERENCE INDEX:
BURIED CONCRETE — Precast Concrete Pipe Sections

REPORT REFERENCES:
WT-405, Vol. I
Defense Atomic Support Agency
Washington 25, D.C.

LOCATION: Yucca Flat
Nevada Test Site

OBJECTIVES:
To furnish information on the vulnerability of tunnels, subways, underground conduit: piping, etc., to loads imposed by underground explosions; and to determine the suitability of structures of circular design for use as protective shelters.

STRUCTURAL DESCRIPTION:
The three tunnel sections, all alike, had 6 inch concrete walls reinforced at mid-thickness with 1/2 inch round bars at 4 inches on center. The tunnel sections were 24 feet long, 7 feet in outside diameter, and had their longitudinal axis horizontal.

STRUCTURAL DETAILS: (See Page 33)

SOIL CHARACTERISTICS:
Visual inspection of several open cuts at the test site showed a wide range in the grain size of the soil. Alternate bands of coarse gravel and graded sand were seen to extend from the surface to a depth of 12 to 15 feet. There was a wide range in soil grain size within the rather shallow depth of 10 feet.

STRUCTURAL DETAILS:

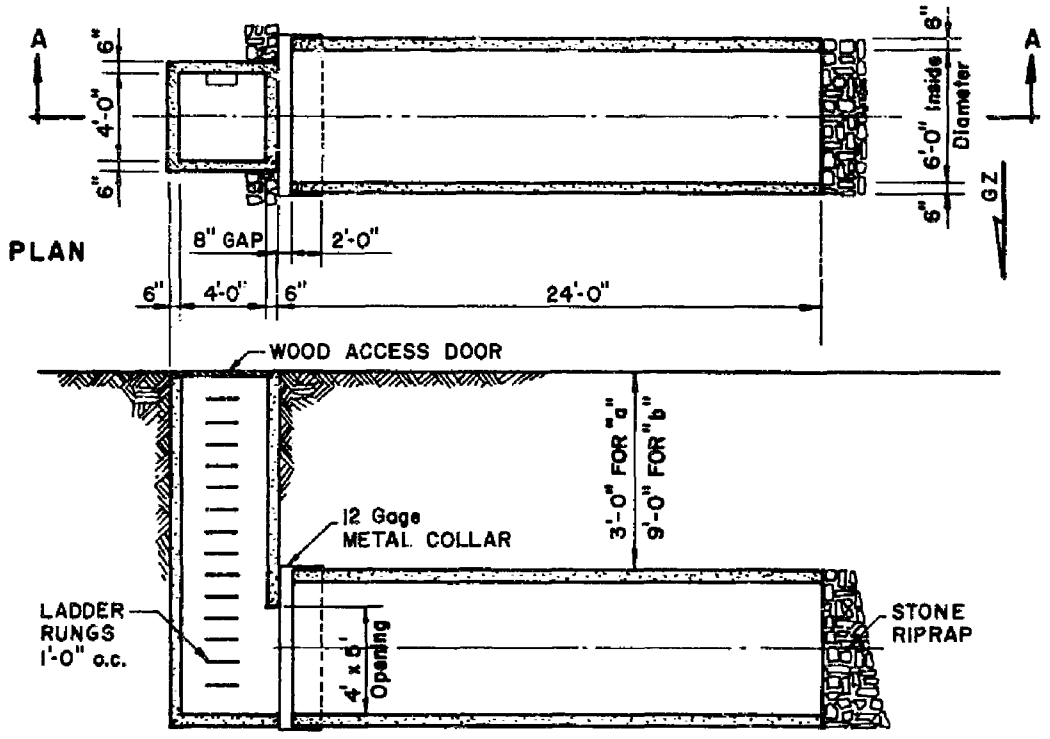

SECTION A-A

PREVIOUS TESTING: None
Buried Concrete Pipe also included in Operation Buster-Jangle Project 9.1 (Structure 9.1 b).

SHOT:

Name:	"Uncle"
Type:	Underground
Yield:	1.2 KT
Depth of Burst:	17 feet
Date:	29 Nov 1951

TEST LAYOUT:

Details of Tunnel Sections

structure	material	radial distance from explosion (feet)	depth of earth covering structure (feet)
3.23 a1	Reinforced Concrete	350	3.0
3.23 a2	Reinforced Concrete	525	3.0
3.23 b1	Reinforced Concrete	350	9.0

LOADING:

The earth pressure records indicate the total absence of an earth pressure wave. Test records indicate that the magnitude of the air blast induced earth pressure is quite substantial, attaching values of about 20 psi.

SUMMARY:

The test results have indicated that underground structures of circular cross-section located 2 to 4 crater radii from ground zero are almost invulnerable to the earth-transmitted effects which follow detonation of small nuclear weapons buried at shallow depths.

OTHER REMARKS:

The values of air blast induced ground pressure given on test records do not furnish a reliable means of estimating the compressive load to which the tunnels were subjected. Only a lightly constructed wooden door offered resistance to penetration of the structure by the shock wave. Hence, when the wave passed, it diffracted into the structure loading the inside surfaces and reducing the unbalanced structural load.

SUBSEQUENT TESTING: None

OPERATION: Buster-Jangle

PROJECT: 9.1

STRUCTURE IDENTIFICATION: 9.1a

CROSS REFERENCE INDEX:
EARTH-COVERED AND SEMI-BURIED STEEL — Earth-Covered Corrugated Steel Arch Sections

REPORT REFERENCES:
WT-359
Defense Atomic Support Agency
Washington 25, D.C.

LOCATION: Yucca Flat
Nevada Test Site

OBJECTIVES:
To develop information on the degree of protection from atomic explosions afforded by simple structures: covered trench, metal arch, wood arch, and basement lean-to.

STRUCTURAL DESCRIPTION:
A total of 29 structures were tested. Eighteen of the structures were prefabricated wood, earth-covered trench shelters; four were wood-arch shelters; two were basement lean-to shelters; and five were earth-covered corrugated metal arch structures. Only the corrugated metal arch structures are discussed below.

One complete metal-arch shelter (b-1) was included in the test, built in accordance with plans prepared b, the Lehigh University Institute of Research. It consisted of a 12 gage corrugated metal arch roof, 5 feet 6 inches in diameter, resting on concrete block walls. The arch was covered with three feet of earth cover.

Four other metal-arch sections of similar span were included:

b-2	12 gage	2 feet earth cover	Concrete Footing
b-3	16 gage	2 feet earth cover	Concrete Footing
b-4	16 gage	3 feet earth cover	Concrete Footing
b-5	12 gage	3 feet earth cover	Concrete Footing

STRUCTURAL DETAILS:

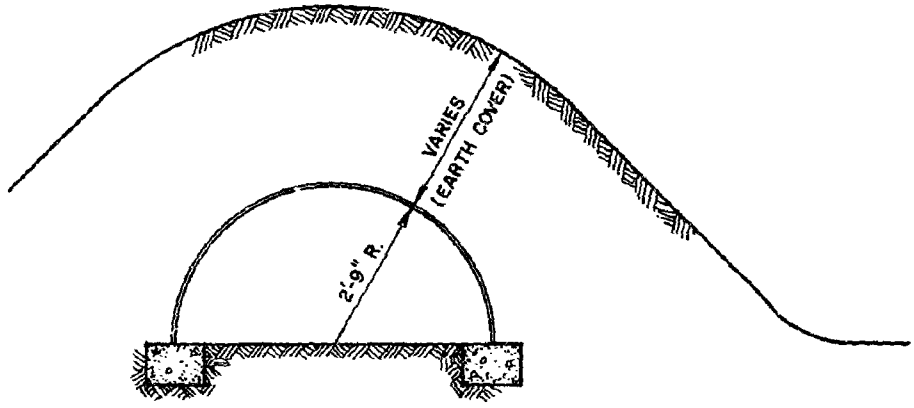

SOIL CHARACTERISTICS:
Yucca Flat is an alluvium-filled valley. The alluvium varies in character from clay and silt-sized particles to cobbles and boulders. The composition of this material is chiefly limestone and volcanic tuff with smaller amounts of other volcanics, quartzite, conglomerate and sandstone. The alluvium is poorly consolidated except where the particles are cemented by caliche or where beds of caliche exist. Density of the alluvium varies from 1.3 to 1.8 kilograms per liter.

After being disturbed, the soil had practically no cohesive properties. The low cohesive value of the material used in backfilling made it difficult to compact the earth cover on the structures. It was also impossible to protect above-ground entrance construction because of the tendency of the material to flow freely. Intermittant showers two days before the first explosion contributed little to the stability of the earth cover. Since no special provisions were taken to compact backfill, the structures were subjected to unusually severe test conditions.

PREVIOUS TESTING: None

SHOT:

Name:	"Baker"	"Charlie"	"Dog"
Type:	Air	Air	Air
Yield:	3.5 KT	14 KT	21 KT
Height of Burst:	1118 feet	1132 feet	1417 feet
Date:	28 Oct 1951	30 Oct 1951	1 Nov 1951

TEST LAYOUT:

	Shot "Baker"		Shot "Charlie"		Shot "Dog"	
	distance from GZ	slant range	distance from GZ	slant range	distance from GZ	slant range
b-1	1272	1694	1360	1769	1256	1894
b-2	1275	1696	1361	1770	1257	1894
b-3	1277	1698	1363	1772	1258	1895
b-4	1280	1700	1363	1773	1258	1895
b-5	1282	1704	1367	1775	1259	1896

LOADING:

(Overpressures at structure)

The only loading information available is peak overpressure. These are as follows:

Shot "Baker" 7.9 psi
Shot "Charlie" 14.8 psi
Shot "Dog" 14.7 psi (estimated)

SUMMARY:

Shot "Baker"	Damage
shelter b-1	Heavy Damage. End section pushed in at bottom. Arch twisted 6" to 12" out of line but intact. Entrance almost impassable — folded. Cover reduced 18" to 24".
shelter b-2	Arch twisted. Cover reduced 15" to 18".
shelter b-3	Cover remaining 6" to 9". No damage.
shelter b-4	Cover remaining 9" to 12". No damage.
shelter b-5	Cover remaining 9" to 12". No damage.

Shot "Charlie"	Damage
shelter b-1	Complete Destruction. End section and entrance demolished. Shelter filled with material.
shelter b-2	No change in position of arch; arch completely stripped; some soil blown in open end.
shelter b-3	End wall uncovered and opened up. Partially filled with soil; practically all cover removed.
shelter b-4	Arch twisted; end section demolished; practically all cover removed.

shelter b-5	No change in arch; partly filled with soil; practically all cover removed.
Shot "Dog"	Damage
shelter b-1	Complete Destruction. No change; structure completely stripped.
shelter b-2	Arch tilted away from ground zero; end section demolished; partially filled with material.
shelter b-3	Arch tilted away from ground zero; end section demolished; completely filled with material.
shelter b-4	Arch tilted towards ground zero; end section demolished; partly filled with soil.
shelter b-5	End section demolished; completely filled with soil.

OTHER REMARKS:
The structural instrumentation used did not provide significant data for any analytical response considerations. Because the ends of the arch sections were open, significant build-up of internal pressures occurred; thereby automatically increasing the resistance of the structures. These structures were not repaired after each test.

SUBSEQUENT TESTING:
Similar structures were tested in Operation Upshot-Knothole, Project 21.1 (WT-801). See text page 74.

OPERATION: Buster-Jangle

PROJECT: 9.1

STRUCTURE IDENTIFICATION: 9.1b

CROSS REFERENCE INDEX:
BURIED CONCRETE — Concrete Pipe
BURIED STEEL — Corrugated Steel Pipe

REPORT REFERENCES:
WT-360
Defense Atomic Support Agency
Washington 25, D.C.

LOCATION: Yucca Flat
Nevada Test Site

OBJECTIVES:
To determine the effects of several atomic air bursts (as related to blast, radiation, and thermal hazards to personnel) on a shelter constructed of conventional materials and buried under about three feet of earth.

STRUCTURAL DESCRIPTION:
The test structure was constructed of 24 feet of standard centrifugally spun reinforced concrete pipe (three 8 foot lengths, 90 inch inside diameter, 7 3/4 inch shell thickness); a poured-in-place reinforced concrete double ramp entrance; 24 feet of ingot iron corrugated multiplate pipe (four 6 foot lengths, 90 inch inside diameter, 10 gage); and a 10 gage and 12 gage corrugated metal sheet and structural steel double ramp entrance. These materials were joined at the center to form a 48 foot long (exclusive of ramps) 48-person capacity shelter. Three feet and 3 feet 8 inches of earth were placed over the concrete and metal pipe respectively, mounded about 2 feet above normal grade over the principal axis of the pipe, and sloped at about 1 in 10.

STRUCTURAL DETAILS: (See Page 40)

SOIL CHARACTERISTICS:
The alluvium in Yucca Flat varies in character from clay and silt-sized particles, to cobbles and boulders. The composition of this material is chiefly limestone and

STRUCTURAL DETAILS:

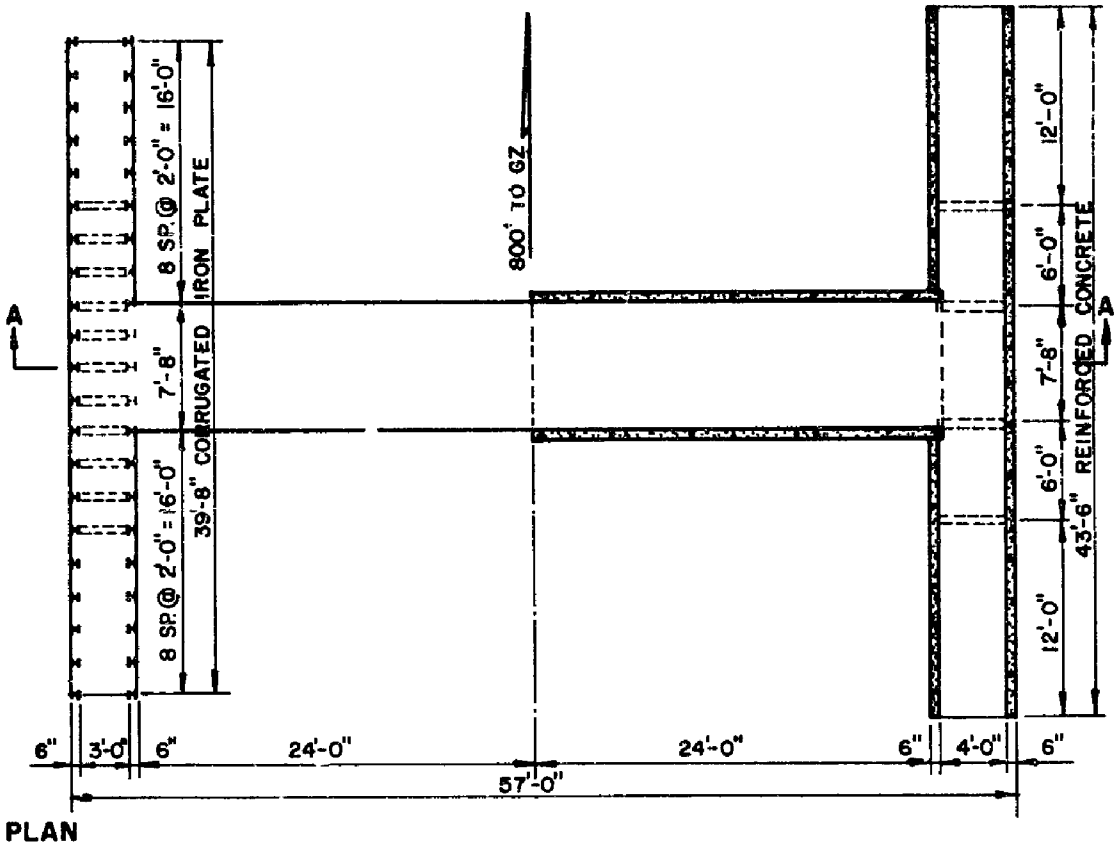

PLAN

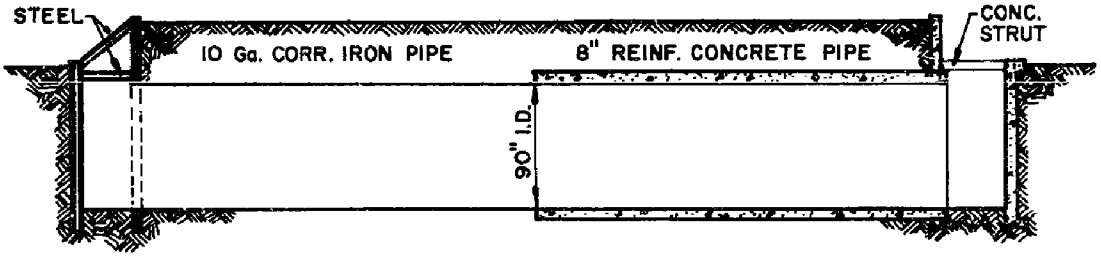

SECTION A-A

volcanic tuff with smaller amounts of other volcanics, quartzite, conglomerate and sandstone. The alluvium is poorly consolidated except where the particles are cemented by caliche or where beds of caliche exist. Density of the alluvium varies from 1.3 to 1.8 kilograms per liter; that is, 88 to 112 pounds per cubic foot. There were no determinations made of the cohesive properties of the soil either before or after it was disturbed.

The soil at the location of the AEC Communal Shelter was predominantly of silt-sized particles, of very low moisture content, and difficult to compact. The material showed a pronounced tendency to flow freely, which characteristic caused the progressive flattening after each shot of the mounded earth cover over the shelter with a resultant loss in shielding against initial nuclear radiation. The test operations did not permit the replacement of earth cover removed by each explosion, nor the removal of soil which flowed down the ramps and into the open ends of the shelter.

PREVIOUS TESTING: None

SHOT:

Name:	"Baker"	"Charlie"	"Dog"	"Easy"
Type:	Air	Air	Air	Air
Yield:	3.5 KT	14 KT	21 KT	31.3 KT
Height of Burst:	1118 feet	1132 feet	1417 feet	1314 feet
Date:	28 Oct 1951	30 Oct 1951	1 Nov 1951	5 Nov 1951

TEST LAYOUT:

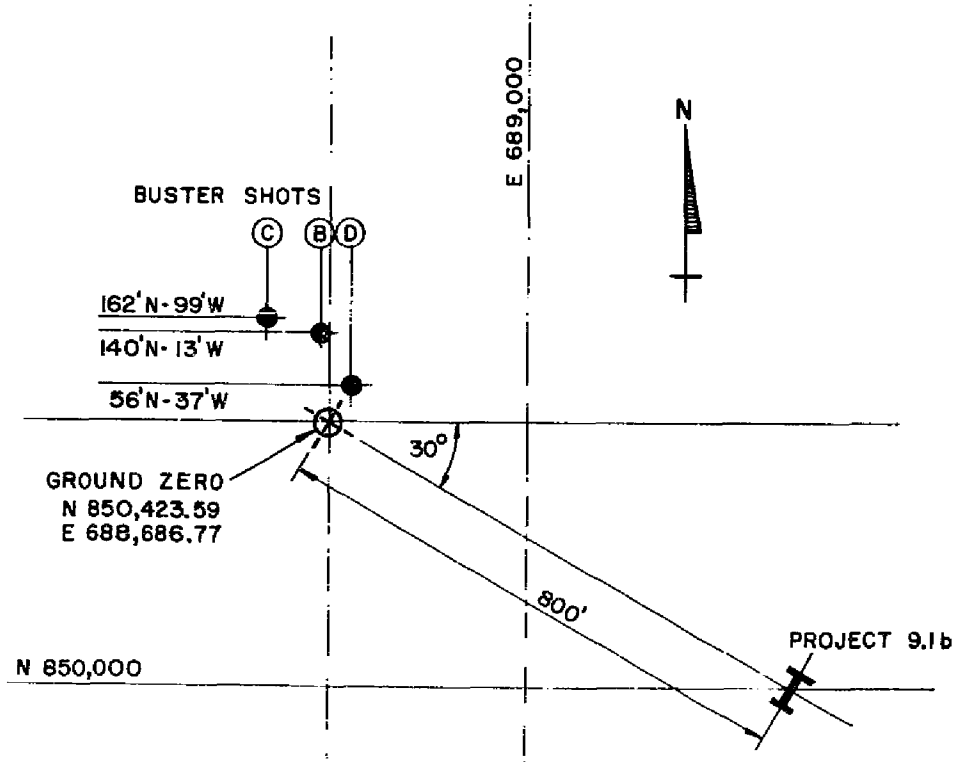

LOADING:

Shot "Baker"

9.0 psi	Peak overpressure at ground level
25.4 psi	Average inside overpressure; 5 feet from center in concrete section
39.1 psi	Average inside overpressure; 5 feet from center in steel section
35.9 psi	Average inside overpressure at center; 24 feet from ends

Shot "Charlie"

24.0 psi	Peak overpressure at ground level
31.7 psi	Average inside overpressure; 5 feet from center in concrete section
47.5 psi	Average inside overpressure; 5 feet from center in steel section
44.7 psi	Average inside overpressure at center; 24 feet from ends

Shot "Dog"

25.9 psi	Peak overpressure at ground level
30.7 psi	Average inside overpressure; 5 feet from center in concrete section
35.2 psi (est.)	Average inside overpressure; 5 feet from center in steel section
38.7 psi	Average inside overpressure at center; 24 feet from ends

Shot "Easy" (Loading data not available)

SUMMARY:

Shot "Baker" produced light damage and insignificant movement of earth cover. The maximum vertical deflections were 1.14 inches for the metal pipe and 1.24 inches for the concrete pipe. Permanent displacements were 0.44 inches for the metal pipe and 0.56 inches for the concrete pipe.

Shot "Charlie" removed a considerable amount of earth cover and large quantities of soil flowed down the ramps and into the pipe ends. No damage was observed in the metal pipe. The maximum vertical deflection was 0.74 inches, and an additional permanent displacement of 0.16 inches was observed. The concrete pipe was undamaged. The maximum vertical deflection was 0.68 inches, and no additional

permanent displacement was observed.

Shot "Dog" removed the remaining earth cover and filled the pipe ends to approximately 50 percent of their original area. The metal ramp was collapsed and the struts at the concrete ramp were damaged. Maximum vertical deflections were 2.72 inches and 2.10 inches for the metal and concrete pipes respectively; and permanent displacements were 0.60 inches and 0.93 inches in addition to the displacements produced by the previous shots.

Shot "Easy" produced vertical deflections of 1.20 inches and 0.62 for the metal and concrete pipe sections respectively; and additional permanent displacements were 0.37 inches and 0.07 inches.

Structural instrumentation consisted of indenter gages and vertical displacement gages.

OTHER REMARKS:
The structures were open; hence, considerable internal pressures developed. Response under these conditions could be considerably different from closed shelters.

SUBSEQUENT TESTING:
None for this structure. Structures of corrugated steel pipe sections were included in the following:

Operation Plumbbob, Project 3.2 (See text page 121.)
Operation Plumbbob, Project 34.3 (See text page 171.)

Structures of concrete pipe sections were included in Operation Plumbbob, Project 3.2.

OPERATION: Ivy

PROJECT: Test Support Station

STRUCTURE IDENTIFICATION: Station 200

CROSS REFERENCE INDEX:
TEST SUPPORT STATIONS — Massive Reinforced Concrete Semi-Buried Shelter

REPORT REFERENCES:
WT-641
Defense Atomic Support Agency
Washington 25, D.C.

LOCATION: Irene (Bogairikk I.)
Eniwetok Proving Grounds

OBJECTIVES: (Non-experimental structure)
Structure used for test support purposes, thus only visual past shot inspections were made.

STRUCTURAL DESCRIPTION:
Massive reinforced concrete semi-buried structure; walls 4 feet thick; roof 3 feet thick; wall reinforcing 1/2% vertical and 1/4% horizontal in each face; roof slab reinforced with steel I-beams over 14, 12, and 9 feet clear spans.

STRUCTURAL DETAILS: (See text page 45.)

SOIL CHARACTERISTICS:
Coral sand. Fine to coarse sand with some fine gravel.

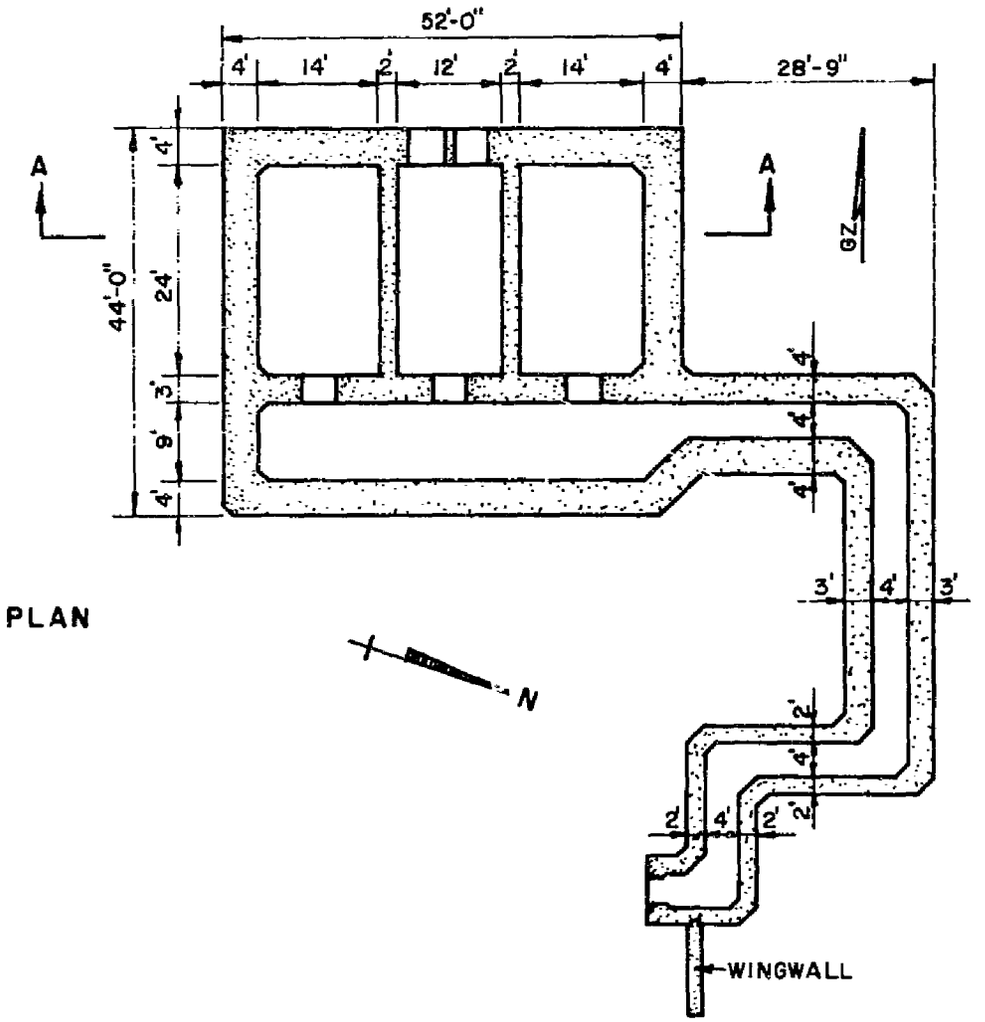

PLAN

PREVIOUS TESTING: None

SHOT:

Name:	"Mike"	"King"
Type:	Tower	Air Drop
Yield:	14 MT	---
Height of Burst:	20 feet	1480 feet
Date:	31 Oct 1952	15 Nov 1952

TEST LAYOUT:

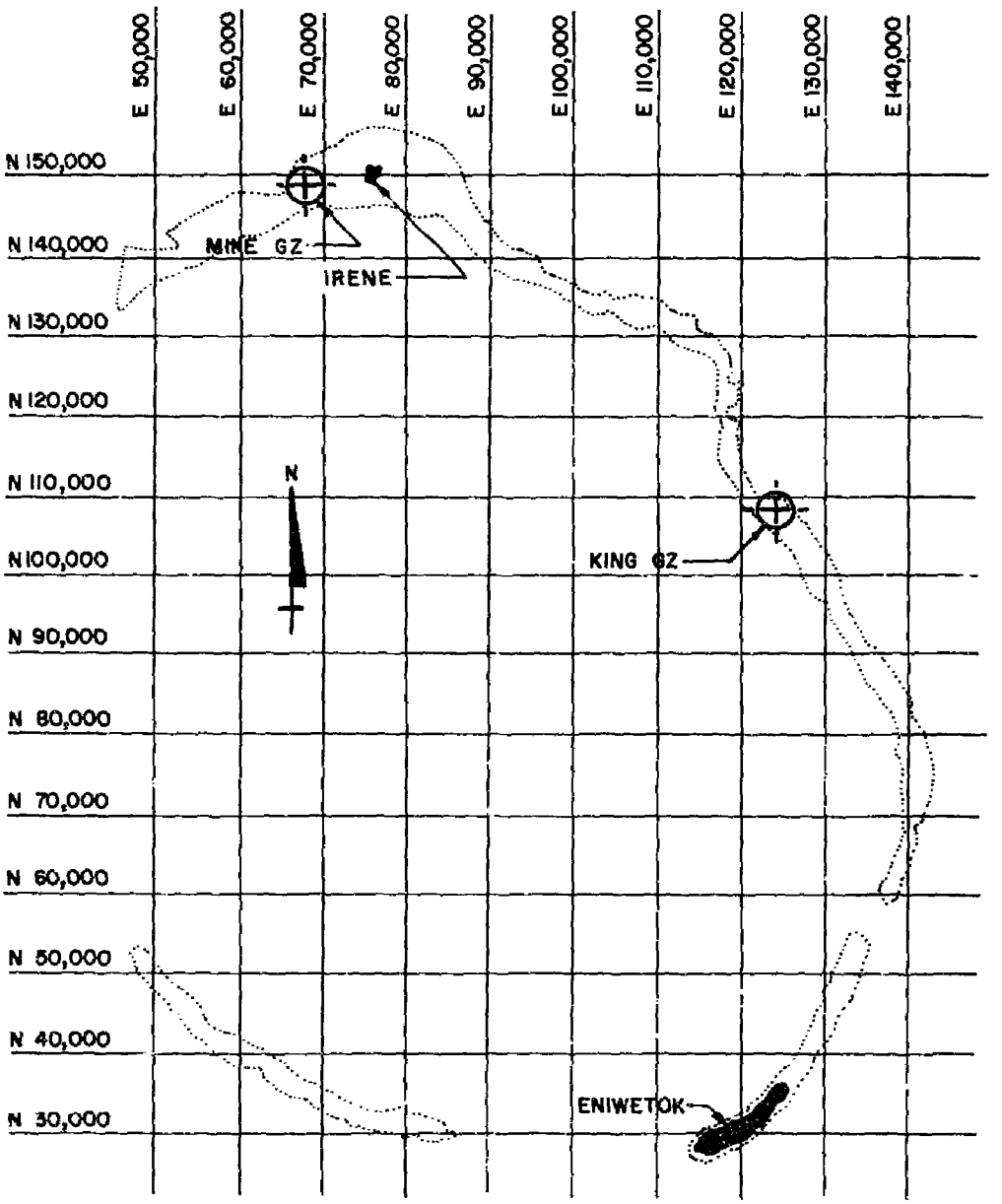
E 50,000
E 60,000
E 70,000
E 80,000
E 90,000
E 100,000
E 110,000
E 120,000
E 130,000
E 140,000
N 150,000
N 140,000
N 130,000
N 120,000
N 110,000
N 100,000
N 90,000
N 80,000
N 70,000
N 60,000
N 50,000
N 40,000
N 30,000
N
MINE GZ
IRENE
KING GZ
ENIWETOK

LOADING:
(Overpressure at ground surface)

Shot "Mike"

Precursor:	None
Main Pulse:	Rise Time — essentially zero
	Peak Overpressure — 52 psi
	Duration — Unknown

Shot "King"

Precursor:	None
Main Pulse:	Rise Time — essentially zero
	Peak Overpressure — 0.35 psi
	Duration — Unknown

SUMMARY:
Heavy concrete wall with pipe inserts at front of structure was badly dented. In rear of structure a heavy steel beam was bent through 180°. A retaining wall was separated from structure but not severely damaged. No major structural damage.

OTHER REMARKS:
Measurements of earth pressure and deflection were not made for this test station; hence, response data was collected by visual inspection for general information purposes only.

SUBSEQUENT TESTING:
This structure, also identified as Operation Castle, Structure 200; Operation Redwing Structure 1611; and Operation Hardtack, Structure 1314, was subjected to significant overpressures in those operations.

Operation	Castle	Redwing	Redwing	Hardtack
Device code name	"Nectar"	"Seminole"	"Apache"	"Koa"
Location	Eniwetok	Eniwetok	Eniwetok	Eniwetok
Size of weapon	1.7 MT	13.6 KT	1.85 MT	1.38 MT
Height of burst	Barge	Surface	Barge	Surface
Distance from GZ	8,967 feet	1,217 feet	7,500 feet	5,360 feet
Peak overpressure	20 psi	30 psi	30 psi	42 psi

Post shot conditions for each successive operation indicated little or no additional damage.

OPERATION: Ivy

PROJECT: Test Support Station

STRUCTURE IDENTIFICATION: Station 252

CROSS REFERENCE INDEX:
TEST SUPPORT STATIONS — Reinforced Concrete Semi-Buried Shelter

REPORT REFERENCES:
WT-641
Defense Atomic Support Agency
Washington 25, D.C.

LOCATION: Yvonne (Runit)
Eniwetok Proving Grounds

OBJECTIVES:
(Non-experimental structure). Structure used for test support purposes.

STRUCTURAL DESCRIPTION:
Reinforced concrete semi-buried structure; walls and roof 1 foot 2 inches thick with 1% main reinforcement for 13 feet clear span.

STRUCTURAL DETAILS.

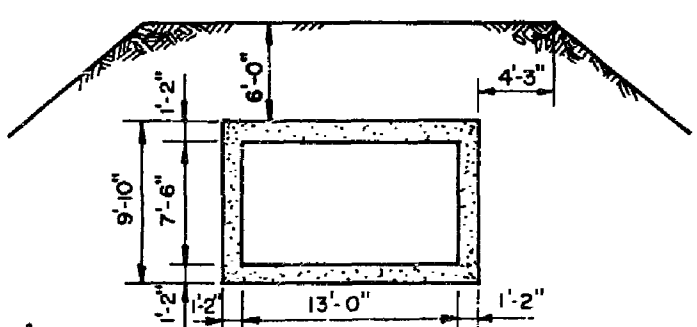

SECTION A-A

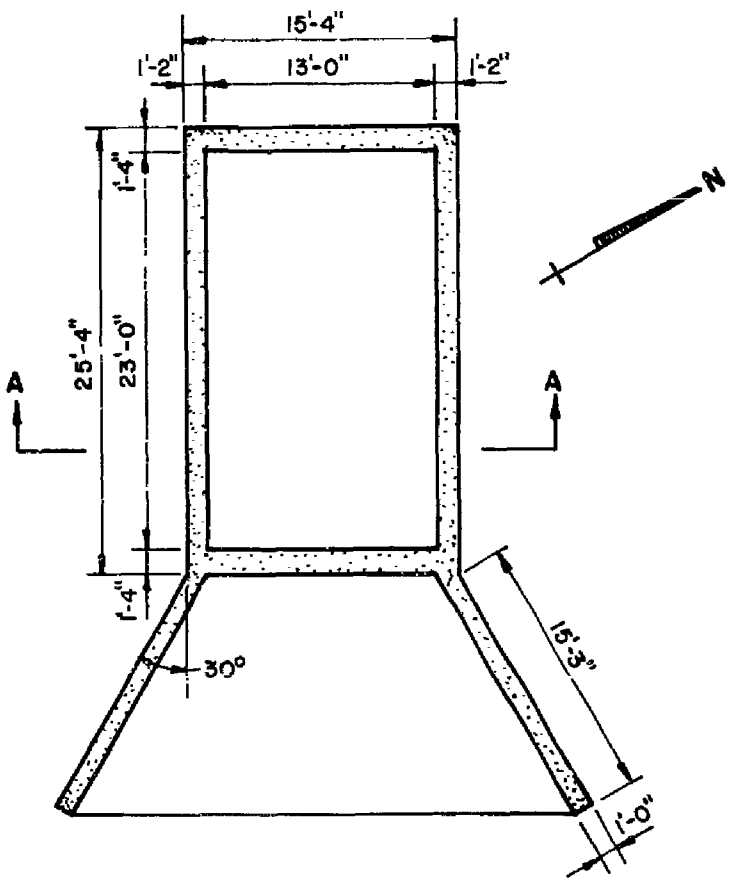

PLAN

SOIL CHARACTERISTICS:
Coral sand. Fine to coarse sand with some fine gravel.

PREVIOUS TESTING: None

SHOT:

Name:	"Mike"	"King"
Type:	Tower	Air Drop
Yield:	14 MT	---
Height of Burst:	20 feet	1480 feet
Date:	31 Oct 1952	15 Nov 1952

TEST LAYOUT:

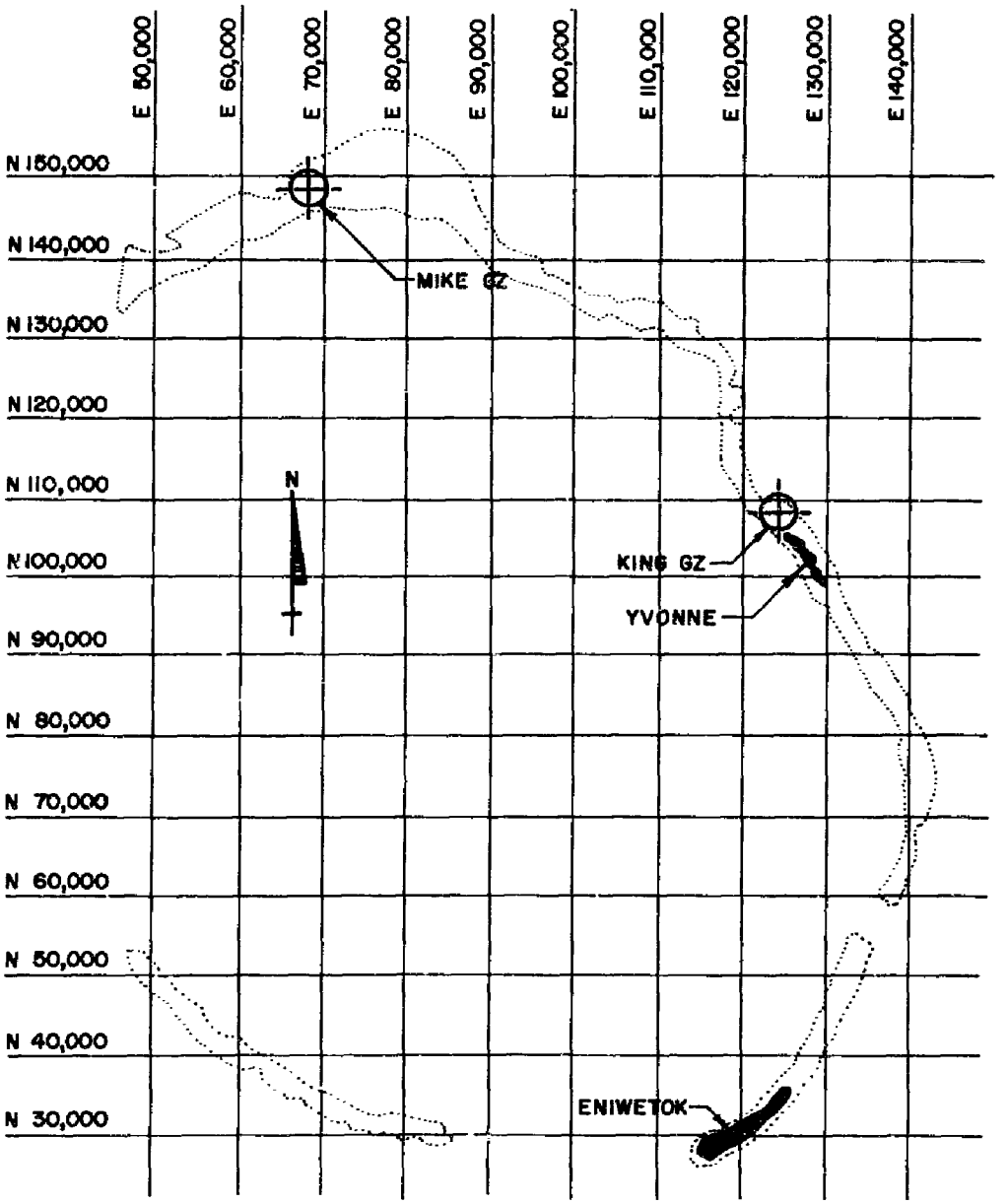

Ranges:

"Mike"	73,500 feet
"King"	5,500 feet

LOADING:

Shot "Mike"

Precursor:	None
Main Pulse:	Rise Time — essentially zero
	Peak Overpressure — 1.35 psi

Shot "King"

Precursor:	None
Main Pulse:	Rise Time — essentially zero
	Peak Overpressure — 18 psi

SUMMARY:
Wood parapet and sandbags were blown over entrances, no damage to concrete structure.

OTHER REMARKS:
Measurements of pressure and deflection were not made for this test station; hence, response data was collected by visual inspection for general information purposes only.

SUBSEQUENT TESTING:
No data available.

OPERATION: Ivy

PROJECT: Test Support Station

STRUCTURE IDENTIFICATION: Station 307

CROSS REFERENCE INDEX:
TEST SUPPORT STATIONS — Reinforced Concrete Semi-Buried Shelter

REPORT REFERENCES:
WT-641
Defense Atomic Support Agency
Washington 25, D.C.

LOCATION: Yvonne (Runit)
Eniwetok Proving Grounds

OBJECTIVES:
(Non-experimental structure). Structure used for test support purposes.

STRUCTURAL DESCRIPTION:
Reinforced concrete semi-buried structure; walls and roof, 1 foot 3 inches thick with 1/2% main reinforcement for 9 foot clear span; earth cover, 2 feet thick over roof.

STRUCTURAL DETAILS:

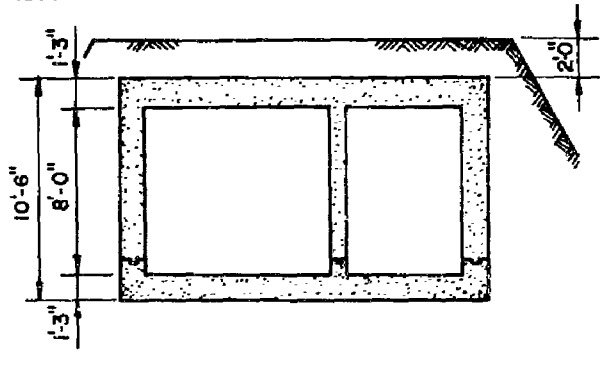

SECTION A-A

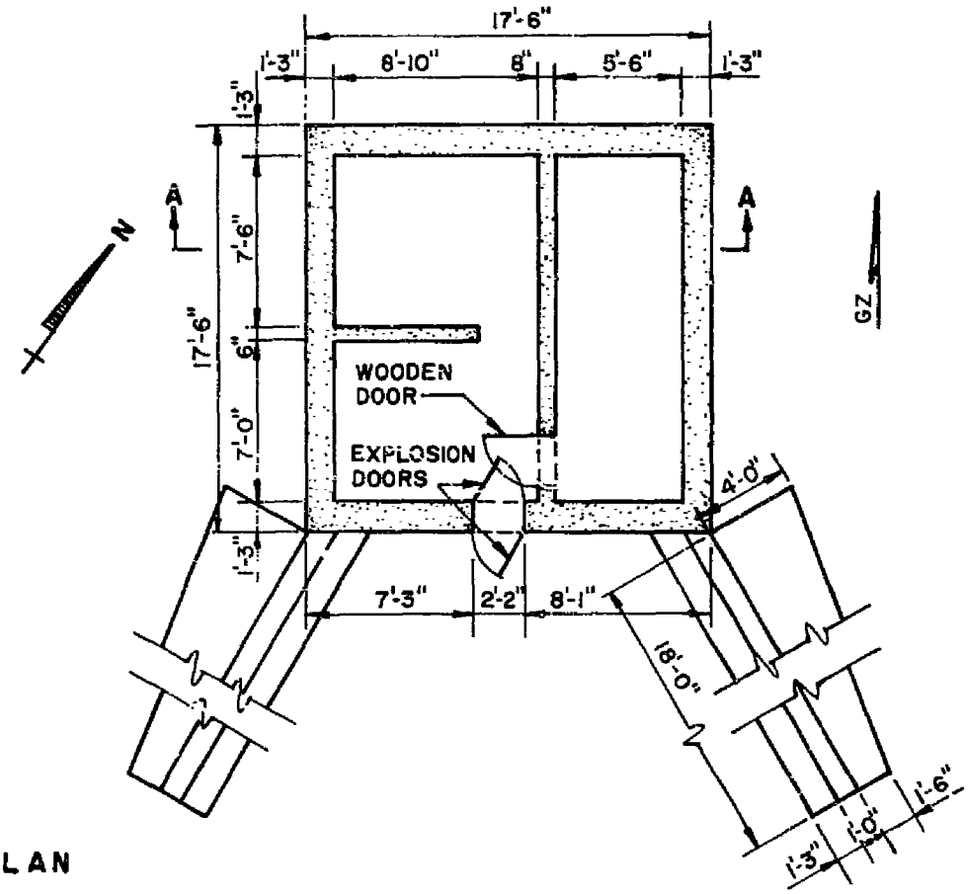

PLAN

SOIL CHARACTERISTICS:
Coral sand. Fine to coarse sand with some fine gravel.

PREVIOUS TESTING: None

SHOT:

Name:	"Mike"	"King"
Type:	Tower	Air Drop
Yield:	14 MT	---
Height of Burst:	20 feet	1480 feet
Date:	31 Oct 1952	15 Nov 1952

TEST LAYOUT: (See Test Layout, Page 50)

LOADING:
(Overpressures at ground surface)
Shot "Mike"

Precursor:	None
Main Pulse:	Rise Time — essentially zero
	Peak Overpressure — 1.35 psi

Shot "King"

Precursor: None

Main Pulse: Rise Time— essentially zero

Peak Overpressure — 11.0 psi

SUMMARY:

The damage observations were of a visual nature. Because there were two atomic bursts at different points in Operation Ivy, there was an overlap of air-burst effects at some points. This made it difficult to tell what damage was caused by each shot. Only minor damage was reported (a 12 inch pipe outlet was bent); no damage to concrete structure.

SUBSEQUENT TESTING:

No data available.

OPERATION: Ivy

PROJECT: Test Support Station

STRUCTURE IDENTIFICATION: Station 520

CROSS REFERENCE INDEX:
TEST SUPPORT STATIONS — Massive Reinforced Concrete Semi-Buried Shelter

REPORT REFERENCES:
WT-641
Defense Atomic Support Agency
Washington 25, D.C.

LOCATION: Clara (Ruchi)
Eniwetok Proving Grounds

OBJECTIVES:
(Non-experimental structure). Structure used for test support purposes.

STRUCTURAL DESCRIPTION:
Massive reinforced concrete semi-buried structure; walls and roof 4 feet 4 inches thick with 1/4% reinforcement in each face in two directions; clear span of 8 feet; earth-fill cover approximately 4 feet deep.

STRUCTURAL DETAILS: (See Page 56)

SOIL CHARACTERISTICS:
Coral sand. Fine to coarse sand with some fine gravel.

PREVIOUS TESTING: None

STRUCTURAL DETAILS:

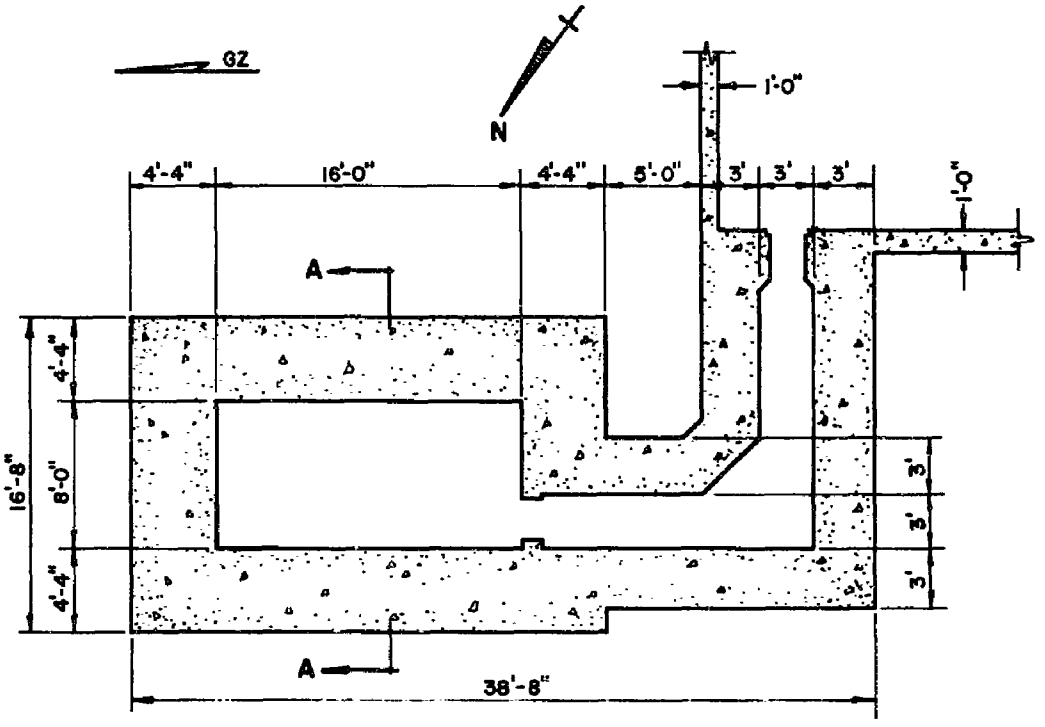

FLOOR PLAN

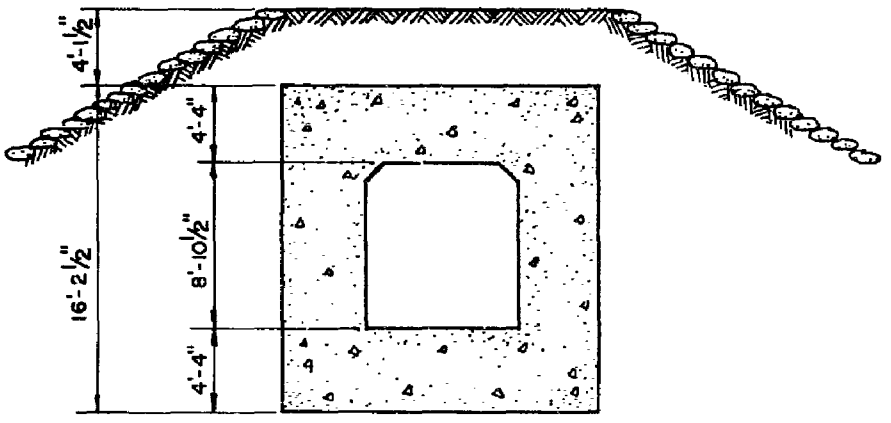

SECTION A-A

SHOT:

Name:	"Mike"	"King"
Type:	Tower	Air Drop
Yield:	14 MT	---
Height of Burst:	20 feet	1480 feet
Date:	31 Oct 1952	15 Nov 1952

TEST LAYOUT:

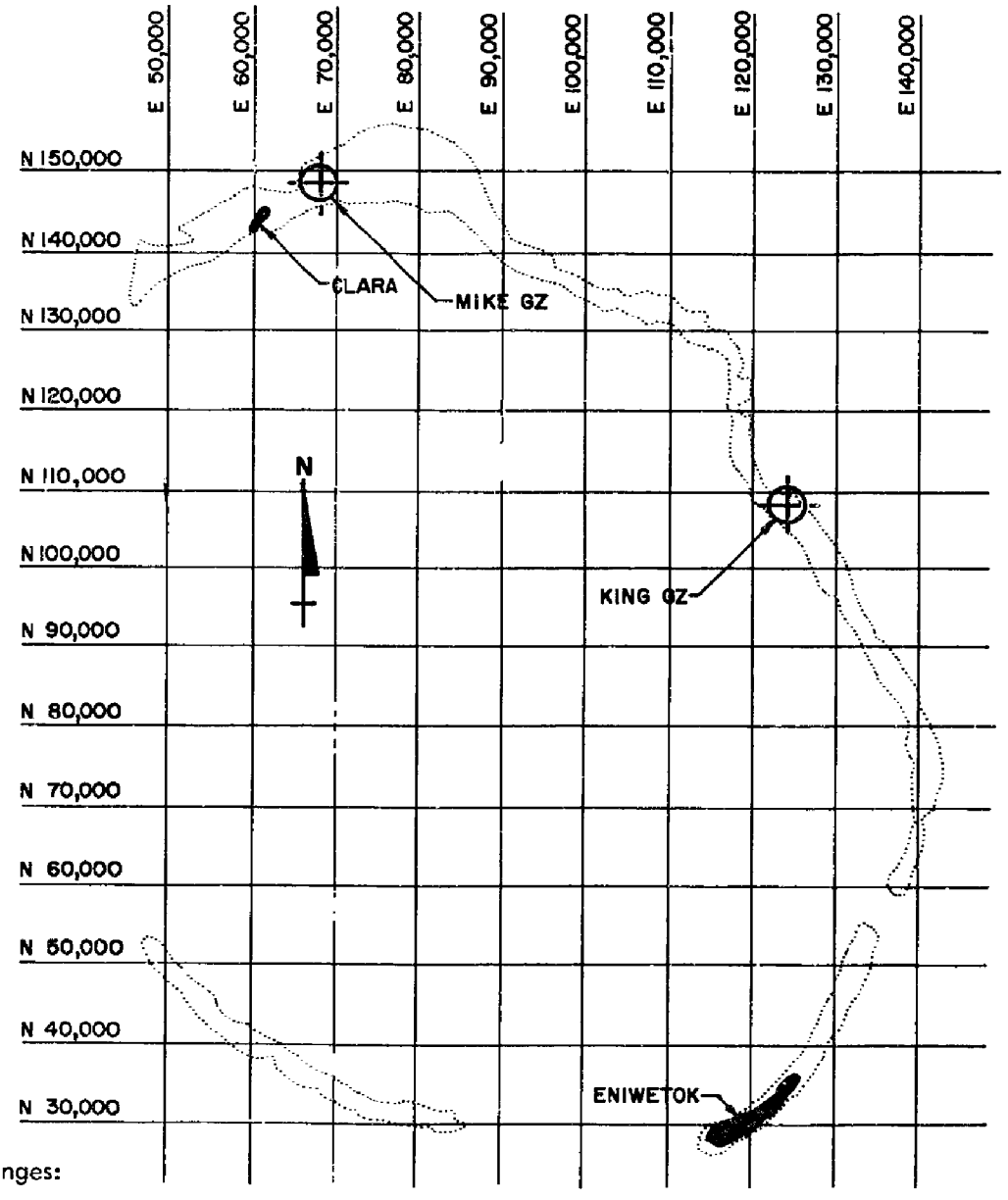

Ranges:

"Mike"	7,100 feet
"King"	71,900 feet

LOADING:
(Overpressure at ground surface)

Shot "Mike"

Precursor:	None
Main Pulse:	Rise Time — essentially zero
	Peak Overpressure — 74 psi estimated

Shot "King"

Precursor:	None
Main Pulse:	Rise Time — essentially zero
	Peak Overpressure — 0.3 psi

SUMMARY:
There was no major damage; however, the top of the retaining wall at the rear of the structure collapsed.

OTHER REMARKS:
Measurements of earth pressure and deflection were not made for this test station; hence, response data was collected by visual inspection for general information purposes only.

SUBSEQUENT TESTING: (WT-901)
This structure, also identified as Operation Castle, Structure 1810.05, was subject to the following overpressure in Operation Castle:

Device code name	"Nectar"
Location	Eniwetok
Size of weapon	1.7 MT
Height of Burst	Barge
Distance from GZ	7,553 feet
Peak overpressure	50 psi

The structure suffered minor damage where the top of the retaining wall collapsed again and much of the earth cover was blown away.

OPERATION: Upshot-Knothole

PROJECT: 3.7

STRUCTURE IDENTIFICATION: 3.7

CROSS REFERENCE INDEX:
BURIED CONCRETE — Reinforced Concrete Personnel Shelters

REPORT REFERENCES:
WT-726
Defense Atomic Support Agency
Washington 25, D.C.

LOCATION: Frenchman's Flat
Nevada Test Site

OBJECTIVES:
To obtain basic data for the development of criteria for the design of various devices suitable as air intakes or ventilation ducts. (An underground reinforced concrete structure, of interest here, has been used as a test facility.)

STRUCTURAL DESCRIPTION:
The test facility consisted of one large structure divided into several compartments to provide the required facilities. The main portion of the structure was divided into two equal areas, and a portion of each of these large areas was subdivided into three separate chambers. The six chambers thus formed were 3 feet by 4 feet by 7 feet high, and served as test chambers for the vents.

The concrete floor slab, roof slab and walls were 12 inches thick; and in general, the design was based on the assumption that the slabs spanned the short direction only and were fixed at the supports.

The roof slab was designed to experience minor cracking when subjected to a triangular loading pulse having a peak pressure of 60 psi and a duration of 100 msec.

The earth cover over the roof was 2 feet deep. Two test entranceways provided access to the structure.

STRUCTURAL DETAILS:

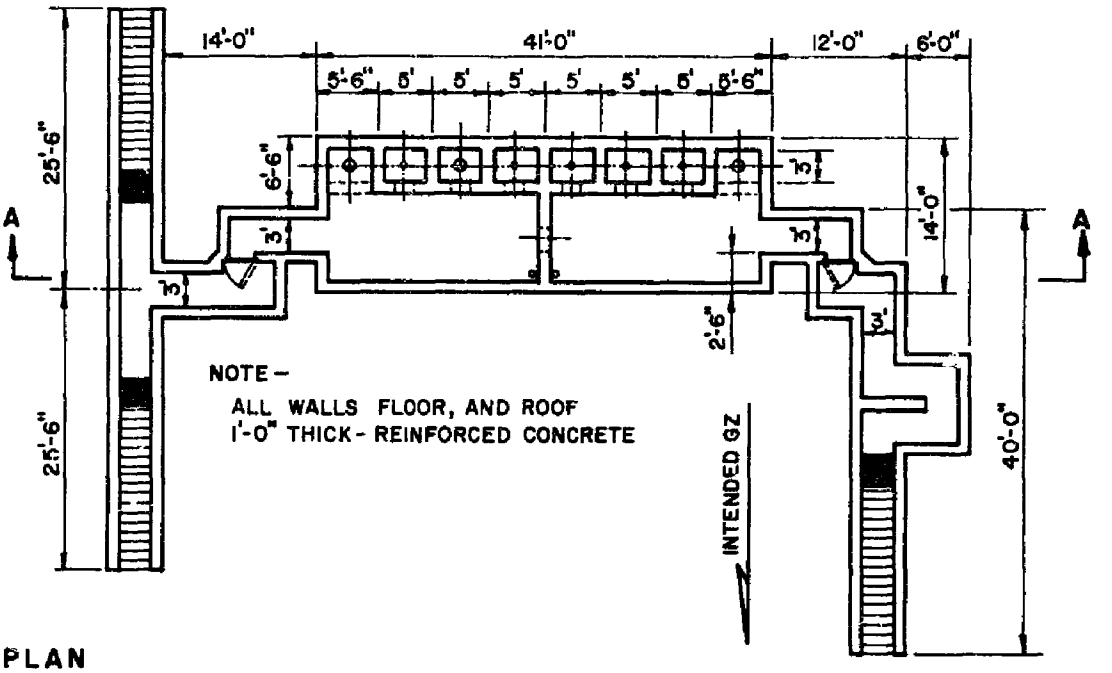

PLAN

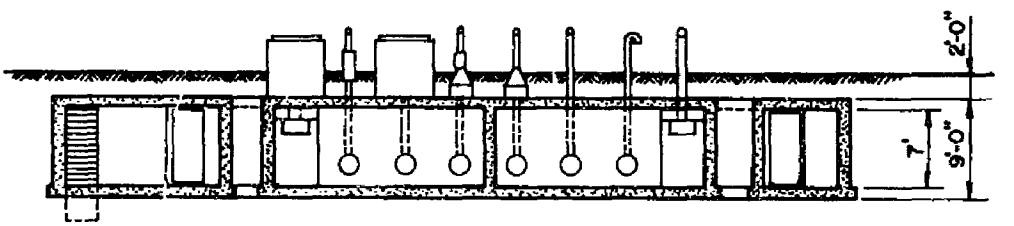

SECTION A-A

SOIL CHARACTERISTICS:
The soil of Frenchman's Flat consists of silt with a trace of clay and has a maximum dry density of 96 to 108 pcf.

PREVIOUS TESTING: None

SHOT:

	Shot 9	Shot 10
Name:	"Encore"	"Grable"
Type:	Air	Gun
Yield:	26.5 KT	14.9 KT
Height of Burst:	2425 feet	524 feet
Date:	8 May 1953	25 May 1953

TEST LAYOUT:

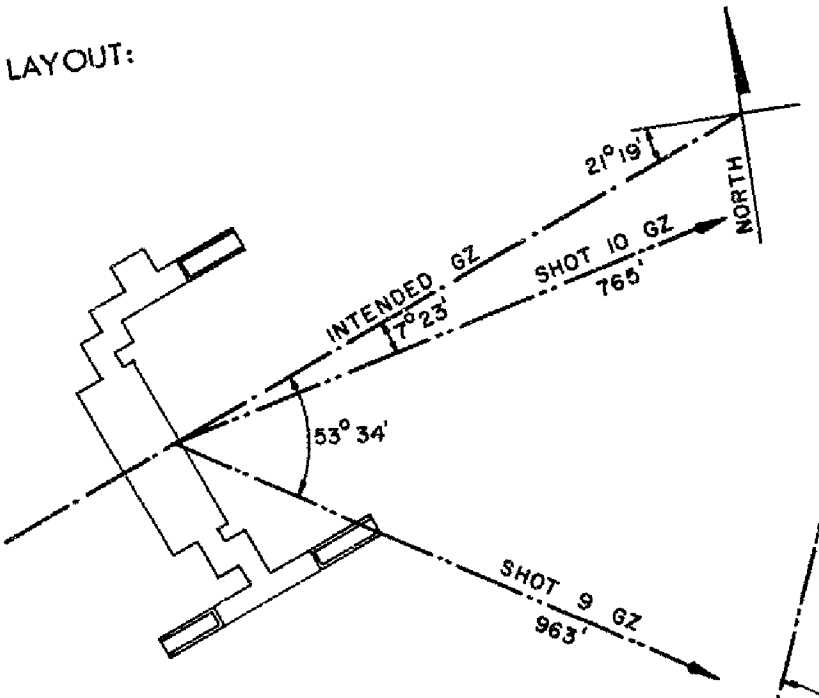

SITE PLAN

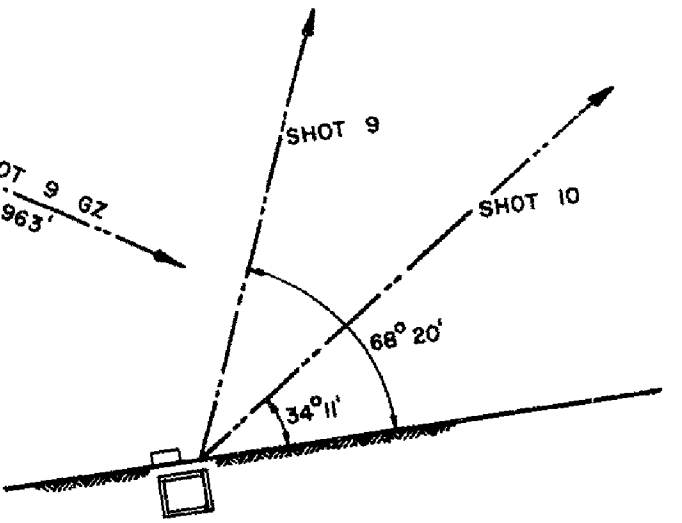

ANGLE OF INCLINATION

LOADING:

Shot 9:

Precursor: None

Main Pulse: Rise Time — essentially zero
Peak Overpressure — 21 psi
Duration — 660 msec

Shot 10:

Precursor: Rise Time — essentially zero
Overpressure — 25 psi
Duration — 30 to 35 msec

Main Pulse: Rise Time — 10 to 15 msec
Peak Overpressure — 115 psi
Duration — 230 msec

SUMMARY:
No structural damage occurred during Shot 9. Most data recorded for this shot was from instrumentation on the ventilators.

The pressures produced by Shot 10 were twice the magnitude expected. Consequently all of the ventilators failed in this shot except the rock grilles. A structural failure occurred in the roof of one-half of the test shelter. The failure appeared to be primarily a shear failure. The roof in the other half of the test shelter showed no measurable permanent deformation.

OTHER REMARKS:
The results of Shot 10 were of interest because of the structural failure which occurred in the roof of the structure in one-half of the test shelter. The roof had been designed for a pressure of 60 psi, with design values that corresponded to a factor of safety of about two. Since the actual pressures obtained were just about those which should have caused failure in the structure, it is not surprising that such a failure was observed. However, the conditions of failure were somewhat unusual in that only one roof element failed, apparently in shear, primarily; and the other showed no measurable permanent deformation. It is not at all impossible, however, that there were differences in the pressure levels on the different parts of the structure, which may have accounted for these phenomena; or that because of construction details, the resistance of the two roofs differed somewhat. This difference could easily have come about because the structure was not intended to fail in the loading expected, and no precise inspection leading to a close evaluation of strength was available.

SUBSEQUENT TESTING:
No data available.

SUMMARY:
No structural damage occurred during Shot 9. Most data recorded for this shot was from instrumentation on the ventilators.

The pressures produced by Shot 10 were twice the magnitude expected. Consequently all of the ventilators failed in this shot except the rock grilles. A structural failure occurred in the roof of one-half of the test shelter. The failure appeared to be primarily a shear failure. The roof in the other half of the test shelter showed no measurable permanent deformation.

OTHER REMARKS:
The results of Shot 10 were of interest because of the structural failure which occurred in the roof of the structure in one-half of the test shelter. The roof had been designed for a pressure of 60 psi, with design values that corresponded to a factor of safety of about two. Since the actual pressures obtained were just about those which should have caused failure in the structure, it is not surprising that such a failure was observed. However, the conditions of failure were somewhat unusual in that only one roof element failed, apparently in shear, primarily; and the other showed no measurable permanent deformation. It is not at all impossible, however, that there were differences in the pressure levels on the different parts of the structure, which may have accounted for these phenomena; or that because of construction details, the resistance of the two roofs differed somewhat. This difference could easily have come about because the structure was not intended to fail in the loading expected, and no precise inspection leading to a close evaluation of strength was available.

SUBSEQUENT TESTING:
No data available.

OPERATION: Upshot-Knothole

PROJECT: 3.8

STRUCTURE IDENTIFICATION: 3.8a, 3.8b, 3.8c

CROSS REFERENCE INDEX:
LOADING-RESPONSE EXPERIMENTAL SYSTEMS — Buried Steel Beam Response Elements

REPORT REFERENCES:
WT-727
Defense Atomic Support Agency
Washington 25, D.C.

LOCATION: Frenchman's Flat
Nevada Test Site

OBJECTIVES:
To determine the nature of forces transmitted through earth to buried structures from the explosion in air of an atomic bomb; and, to determine the variation of these forces with the depth of transmission through earth and with the flexibility of the structural elements.

STRUCTURAL DESCRIPTION:
Three structures (3.8a, 3.8b, and 3.8c) composed of concrete boxes with 8 feet long simple supported steel beam strips as roofs. The beam strips for each of the structures included members of each of three different degrees of flexibility; earth cover was 1 foot, 4 feet, and 8 feet respectively.

STRUCTURAL DETAILS: (See Page 64)

SOIL CHARACTERISTICS:
Tan silt with a trace of clay from Frenchman's Flat; maximum dry density of 96.4 to 108.2 pcf and moisture content of 17.2 to 23.5%; backfill compacted to an average dry density of 99.4 pcf; unconfined compressive strength of 4.17 tsf.

PREVIOUS TESTING: None

STRUCTURAL DETAILS:

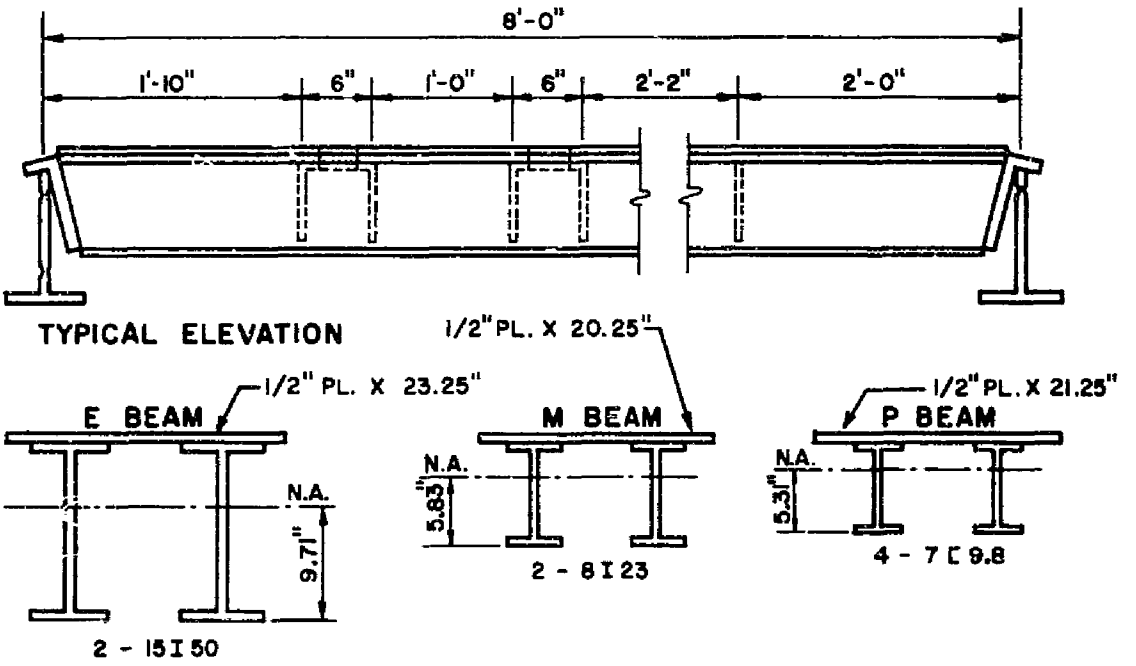

SHOT:

	Shot 9	Shot 10
Name:	"Encore"	"Grable"
Type:	Air	Gun
Yield:	26.5 KT	14.9 KT
Height of Burst:	2425 feet	524 feet
Date:	8 May 1953	25 May 1953

TEST LAYOUT: (See Page 65)

LOADING:
(Overpressures at ground surface)
Shot 9:

Precursor: None
Main Pulse: Rise Time — essentially zero
Peak Overpressure — 15 psi
Duration — 700 msec

Shot 10:

Precursor: Rise Time — essentially zero
Overpressure — 16 psi
Duration — 50 to 60 msec

Main Pulse: Rise Time — 15 to 20 msec
Peak Overpressure — 63 psi
Duration — 150 msec

TEST LAYOUT:

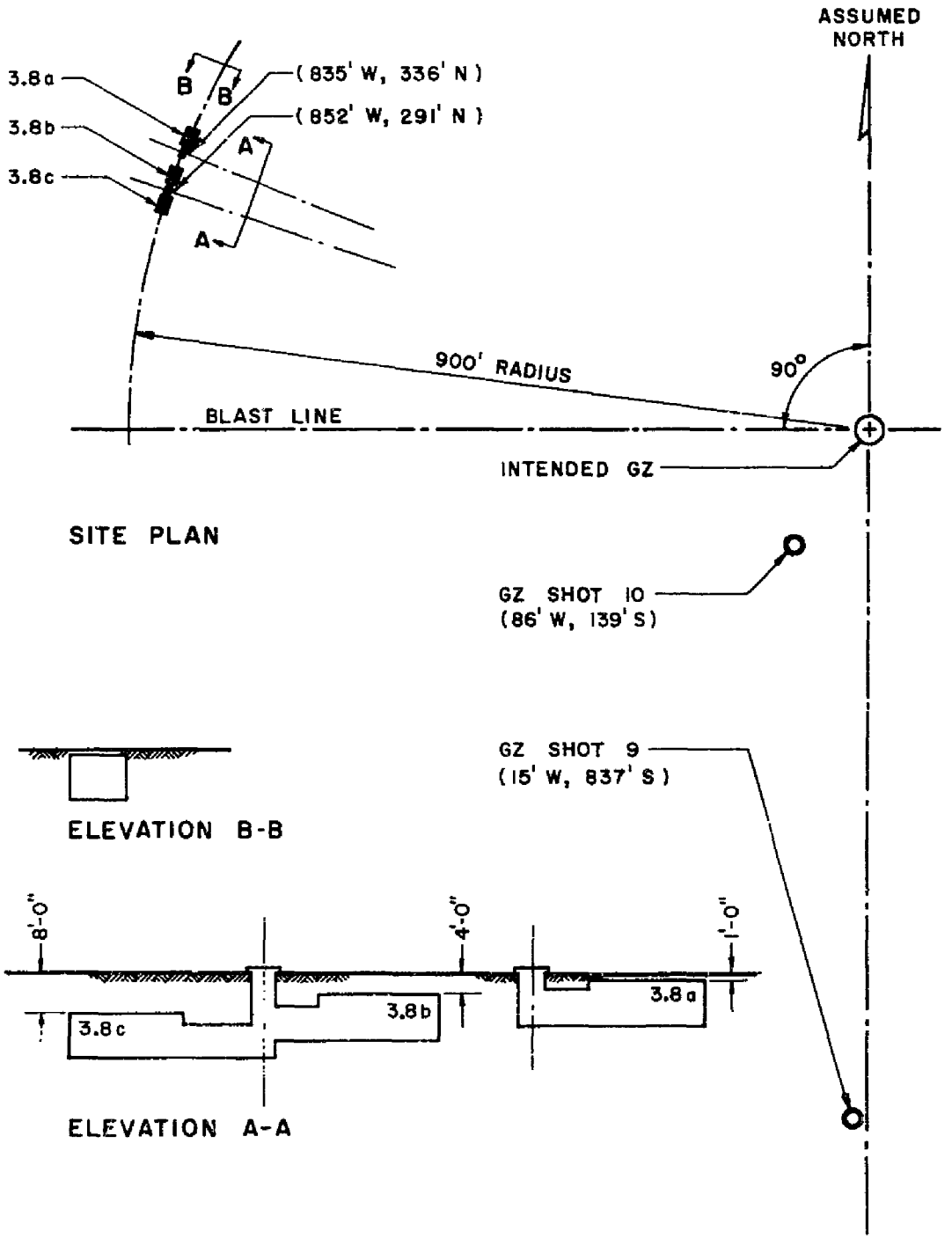

SUMMARY:

Each structure had beam strips designed such that some would respond elastically, some plastically, and some would be in the intermediate range. However, overpressures produced by shots 9 and 10 were not large enough to produce stresses in the plastic range. Beam strips were instrumented to measure earth pressures, transient strains, permanent strains, transient deflections and permanent deflections. Since the recording devices were located very close to ground zero, certain irregularities existed in the transient records. In spite of the above problems, valuable information was obtained showing no effective attenuation of a pressure pulse applied at the surface with depth through the subsoil when the pressure is transmitted to a structure in the soil.

The analyses of the test data indicate the following conclusions:

1. In well-compacted silty subsoil of the type at the test site, there is no effective attenuation of a pressure pulse applied at the surface with depth through the subsoil when the pressure is transmitted to a structure in the soil. The transient, as well as the permanent strains and deformations of the beam strips, were of about the same order of magnitude at all three depths and showed only a slight decrease for the 8 feet depth compared with the others. This indicates that for deflections of less than 0.5 percent of the span and for depths of cover less than the span length the dynamic "arching" phenomenon is negligible; and the beneficial effect of added cover is primarily that due to the added mass of such a cover.

2. For underground structures having a net density less than that of the displaced soil, the overall accelerations of the structure act to reduce the influence of the pressures applied to the top of the structure. However, this influence is not large, and may be neglected in design.

3. The lateral pressures exerted on vertical faces of a buried structure, produced by pressures applied at the top surface of the soil, are of an order of magnitude of 15 percent of the vertical pressures on the surface for well compacted silty soils of the type at the test site.

4. The pressures exerted upward on the base or floor slab of buried structures are very nearly of the same magnitude as the downward pressures on the ground surface.

OTHER REMARKS: (See Operation Plumbbob, Project 3.4)

SUBSEQUENT TESTING:

Structural elements with certain modifications were included in the following projects:

Operation Teapot, Project 3.4 (WT-1127) (See text page 91.)

Operation Plumbbob, Project 3.4 (WT-1423) (See text page 132.)

OPERATION: Upshot-Knothole

PROJECT: 3.13

STRUCTURE IDENTIFICATION: 3.13a

CROSS REFERENCE INDEX:
EARTH-COVERED AND SEMI-BURIED CONCRETE — Semi-Buried Precast Concrete Shelter (Gable)

REPORT REFERENCES:
WT-729
Defence Atomic Support Agency
Washington 25, D.C.

LOCATION: Frenchman's Flat
Nevada Test Site

OBJECTIVES:
To evaluate the effectiveness of earth cover against air blast in protecting above ground buildings; and to develop an analytical method for predicting their response.

STRUCTURAL DESCRIPTION:
The structure was a 100-person precast concrete shelter developed by the Bureau of Yards and Docks. The inside plan dimensions were 22 feet by 48 feet, and the interior was sub-divided into three main sections by two precast concrete partitions.

STRUCTURAL DETAILS: (See Page 68)

SOIL CHARACTERISTICS:
No soil data given; but soil at Frenchman's Flat consists of silt with a trace of clay, and has a maximum dry density of 96 to 108 pcf.

PREVIOUS TESTING:
A similar structure was tested in Operation Greenhouse, Project 3.2.4a (Reference WT-23, WT-24, WT-91, WT-117)

STRUCTURAL DETAILS:

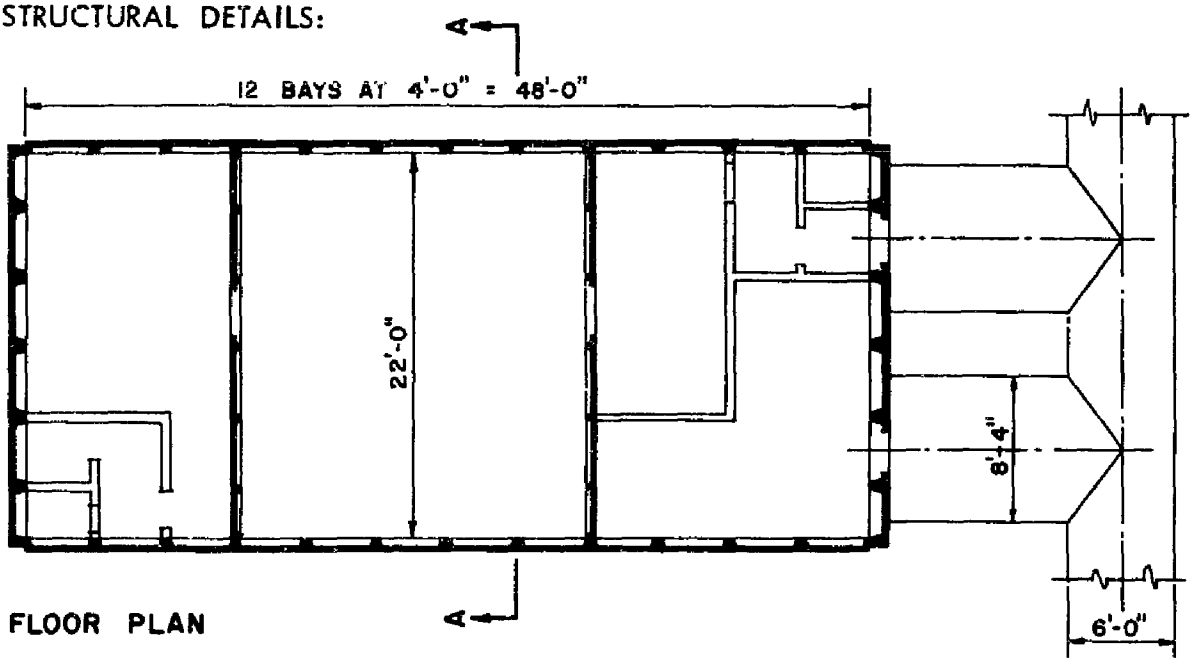

FLOOR PLAN

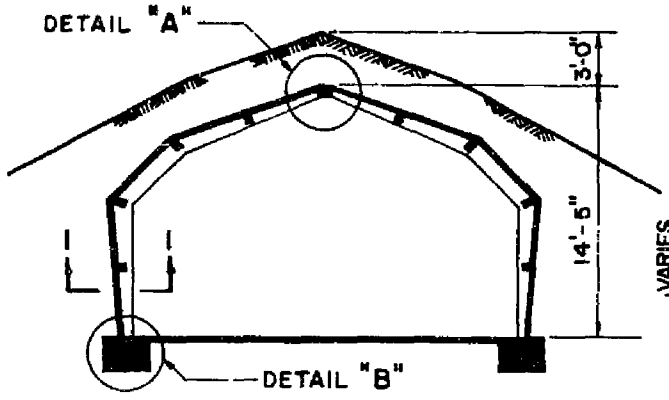

SECTION A-A

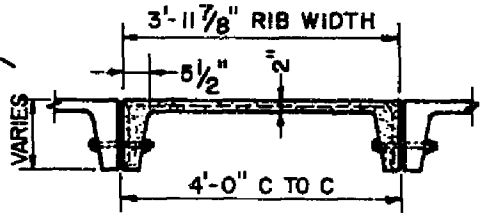

SECTION I-I

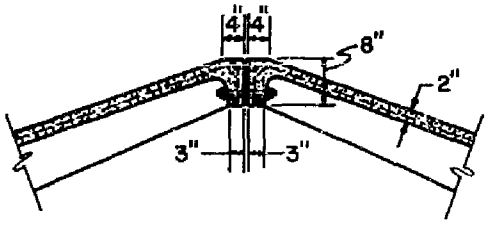

DETAIL "A"

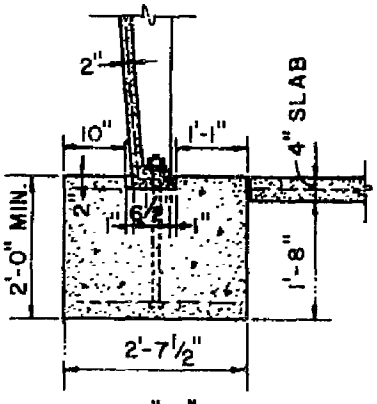

DETAIL "B"

SHOT:

	Shot 9
Name:	"Encore"
Type:	Air
Yield:	26.5 KT
Height of Burst:	2425 feet
Date:	8 May 1953
Range:	2780 feet

TEST LAYOUT:

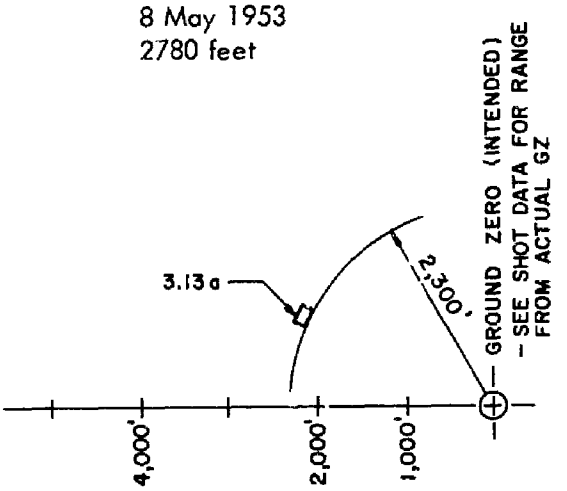

LOADING:
Shot 9:

Precursor:	None
Main Pulse:	Rise Time — essentially zero
	Peak Overpressure — 10.8 psi
	Duration — 700 msec

SUMMARY:
The response of the structure was completely elastic during Shot 9.

A similar structure 3.13b was tested as an uncovered above ground structure in Shot 9. Neither 3.13a or b was extensively damaged. Subsequently, the cover was removed from 3.13a and both structures were tested as uncovered above ground structures in Shot 10.

The primary mode of deflection of 3.13a, Shot 9, appeared to be crown down, haunches out. Small cracks were observed in the end panels and the associated vertical beams.

Transient measurements of pressure, deflection, strain, torque and shear were made to determine the loading and response of the structure.

SUBSEQUENT TESTING:
Operation Upshot-Knothole, Project 3.13b — Same structure with earth cover removed (WT-729).

OPERATION: Upshot-Knothole

PROJECT: 3.15

STRUCTURE IDENTIFICATION: 3.15

CROSS REFERENCE INDEX:
EARTH-COVERED AND SEMI-BURIED STEEL — Earth-Covered Corrugated Steel Arch Shelter

REPORT REFERENCES:
WT-729
Defense Atomic Support Agency
Washington 25, D.C.

LOCATION: Frenchman's Flat
Nevada Test Site

OBJECTIVES:
To evaluate the effectiveness of earth cover against air blast in protecting above-ground buildings and to develop an analytical method of predicting their response.

STRUCTURAL DESCRIPTION.
The structure was a 25 feet by 48 feet steel arch personnel shelter manufactured by the Armco Drainage and Metal Products, Inc. The barrel of the structure was an Armco Multi-Plate arch composed of 10 gage curved corrugated and punched sheets that were bolted together to form a semi-circular arch roof, the edges of the arch being bolted to a longitudinal base channel.

The end walls were constructed of 3 gage corrugated sections. Entrance to the shelter was provided by a T-shaped, 84 inch, 10 gage Armco Multi-Plate pipe connected by bolting to the end wall or bulkhead.

The foundation consisted of a 1 foot wide by 2 feet deep wall footing of reinforced concrete. The shelter had no floor slab.

STRUCTURAL DETAILS:

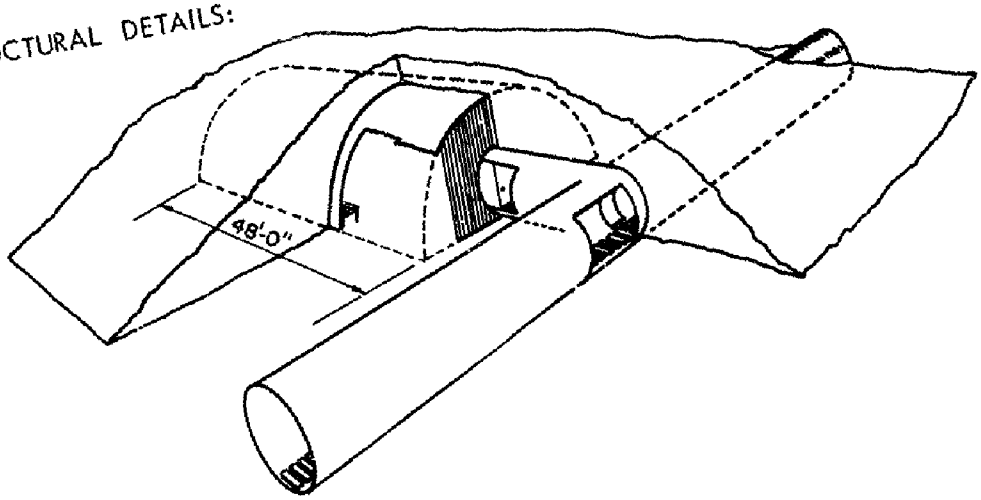

PERSPECTIVE

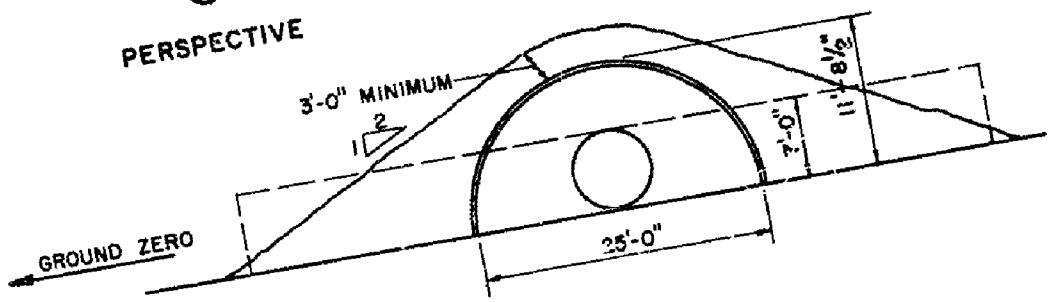

CROSS SECTION

SOIL CHARACTERISTICS:
No soil data given; but soil at Frenchman's Flat consists of silt with a trace of clay, and has a maximum dry density of 96 to 108 pcf.

The earth fill was placed in 6 inch layers and compacted with a sheepsfoot roller. Pneumatic tampers were used adjacent to the structure to a height of 8 feet above grade.

PREVIOUS TESTING: None

SHOT:	Shot 9	Shot 10
Name:	"Encore"	"Grable"
Type:	Air	Gun
Yield:	26.5 KT	14.9 KT
Height of Burst:	2425 feet	524 feet
Date:	8 May 1953	25 May 1953
Range:	2700 feet	2280 feet

TEST LAYOUT:

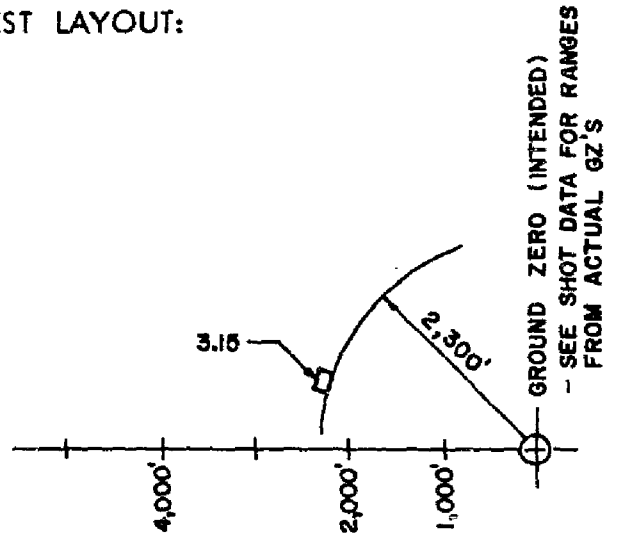

LOADING:

Shot 9:

Precursor:	None
Main Pulse:	Rise Time — essentially zero
	Peak Overpressure — 10.8 psi
	Duration — 700 msec

Shot 10:

Precursor:	Rise Time — essentially zero
	Overpressure — 4 psi
	Duration — approximately 70 msec
Main Pulse:	Rise Time — 10 to 20 msec
	Peak Overpressure — 8.1 psi
	Duration — 400 msec

SUMMARY:

Shot 9

Damage to the entrance door, entrance bulkhead and failure of the bulkhead-to-tunnel connection occurred. The only other visible damage to the structure was a crack in each end wall foundation near the center line of the building. Evidence from deflection gages indicates that the windward foundation dropped approximately 1.2 inches. Readings of permanent strain indicate minor connection slippage resulting in slight contraction of the arch. T-shaped tunnels appear effective in eliminating reflected pressures on entrance doors.

Shot 10

Little detailed information is available due to the loss of deflection gages. However, the available evidence indicates that there was one major lurch of the building followed by a rebound, after which the oscillations were trivial.

Instrumentation consisted of SR-4 strain gages connected with an oscillograph, BRL

deflection gages, and scratch gages.

The steel in the arch barrel, with 3 feet of earth cover over the crown, remained within the elastic range during both shots. The end wall which contained no entrance tunnel sustained serious deflection and possibly represents the weakest component of the structure.

OTHER REMARKS:
The structure, of flexible corrugated steel, responded in a manner whereby the structure and supporting soil acted as a unit. Subsequent testing, as indicated below, further confirmed the importance of understanding the soil-structure interaction. This steel arch building remained in operational condition, and, except for the door frame in Shot 9, would have provided satisfactory protection to personnel during these two shots. See other remarks of Operation Teapot, Project 3.6; Operation Plumbbob, Project 3.3; and Operation Hardtack, Project 3.2.

SUBSEQUENT TESTING:
None for this structure. Similar structures were evaluated in the following projects:

Operation Teapot, Project 3.6 (WT-1128) (See text page 95)
Operation Plumbbob, Project 3.3 (WT-1422) (See text page 127)
Operation Hardtack, Project 3.2 (ITR-1626-1 and 1626-2) (See text page 189)

OPERATION: Upshot-Knothole

PROJECT: 21.1

STRUCTURE IDENTIFICATION:
21.1a, 21.1b, 21.1c, 21.1d, 21.1e, 21.1f, 21.1g, 21.1h

CROSS REFERENCE INDEX:
BURIED-CONCRETE — Reinforced Concrete Personnel Shelters

REPORT REFERENCES:
WT-801
Federal Civil Defense Administration
Washington 25, D.C.

LOCATION: Yucca Flat
Nevada Test Site

OBJECTIVES:
To check the adequacy of eight outdoor shelters against gamma-radiation penetration and thermal and blast effects. Four indoor type shelters were also evaluated but are not included here, because data is not applicable to underground structure tests.

STRUCTURAL DESCRIPTION:
One of the structures was a reinforced concrete basement exit with three feet of earth fill over the shelter area. (21.1a)

Three of the structures were covered trench shelters constructed of concrete block with a 4 1/2 inch concrete slab for a roof. The three structures were located at various distances from ground zero. Two of the shelters had three feet of earth fill for cover, and the third was covered with four and one-half feet of earth fill. (21.1b, 21.1c, and 21.1h)

A wood covered trench with three feet of earth fill for cover and concrete block walls was used as one of the shelters. The shaft entrance to this shelter was not closed. (21.1d)

One shelter consisted of a trench covered with a 4 1/2 inch concrete slab and three

feet of earth fill cover. Concrete block was used, and the shaft entrance was closed. (21.1e)

A basement exit, constructed of concrete block walls with a six inch reinforced concrete slab roof, was used with three feet of earth fill for one of the shelters. (21.1f)

A concrete pipe with a closed shaft entrance and three feet of earth cover was used as one of the shelters. (21.1g)

STRUCTURAL DETAILS:

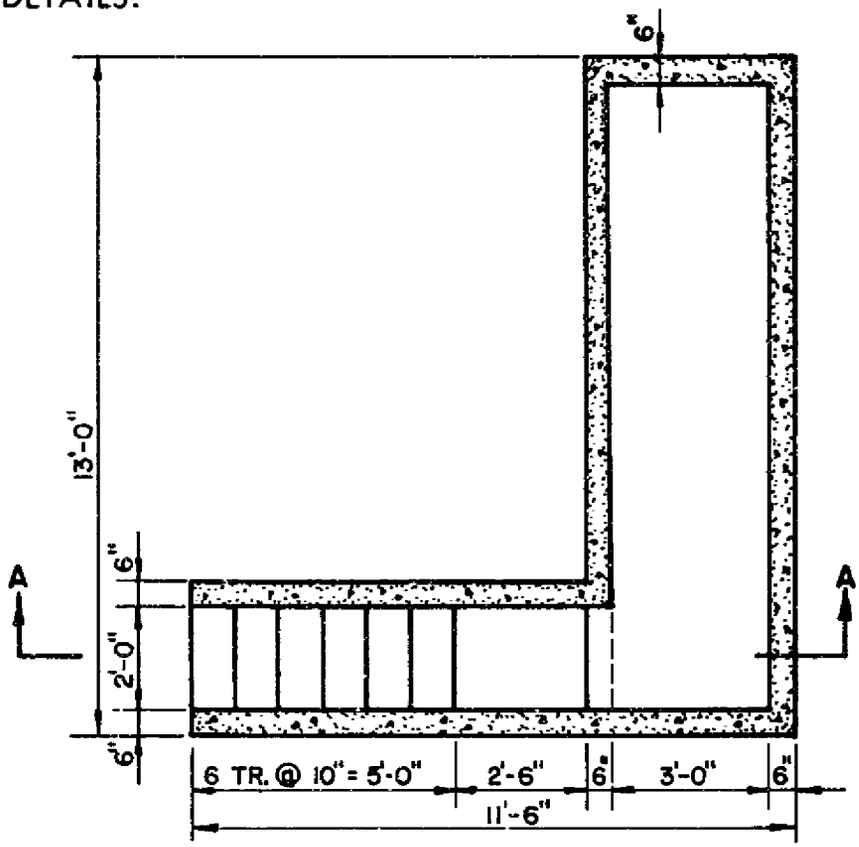

PLAN

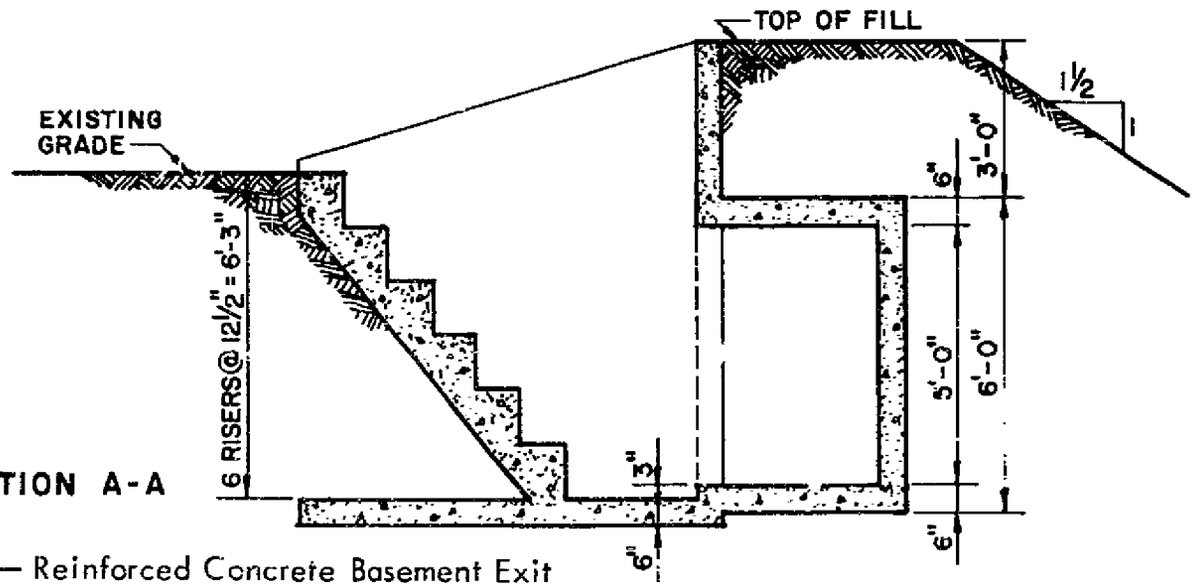

SECTION A-A

21.1a — Reinforced Concrete Basement Exit

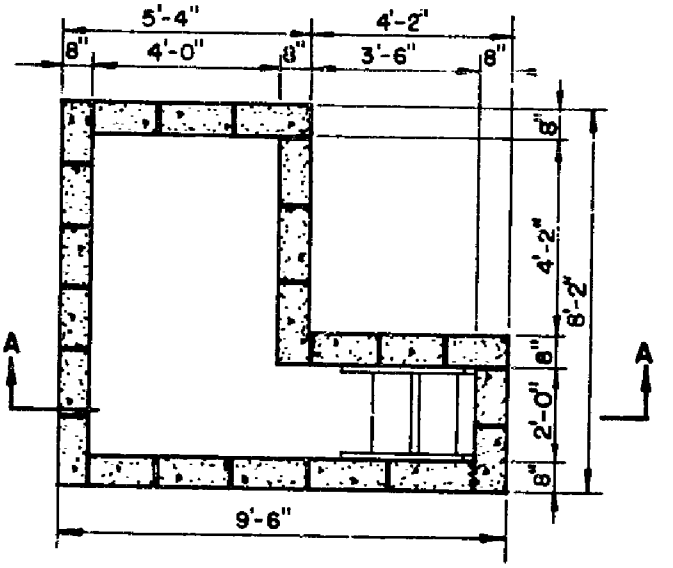

PLAN

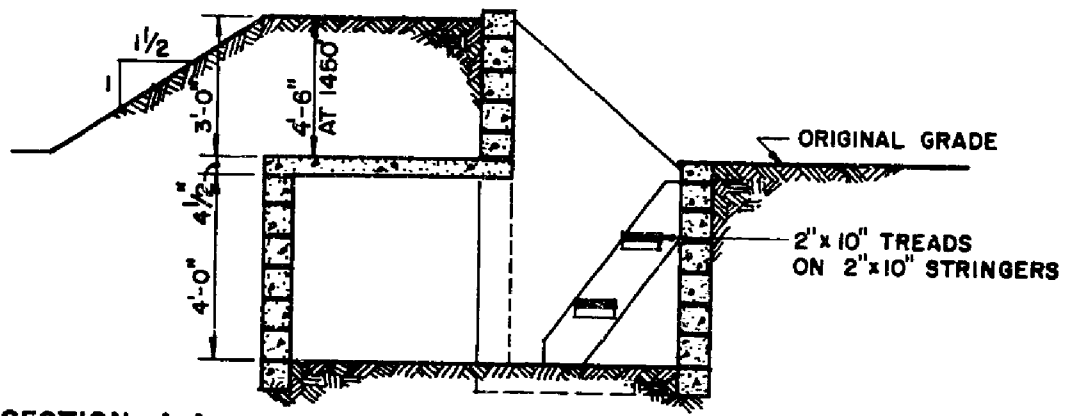

SECTION A-A

21.1b, 21.1c, 21.1h — Covered Trench

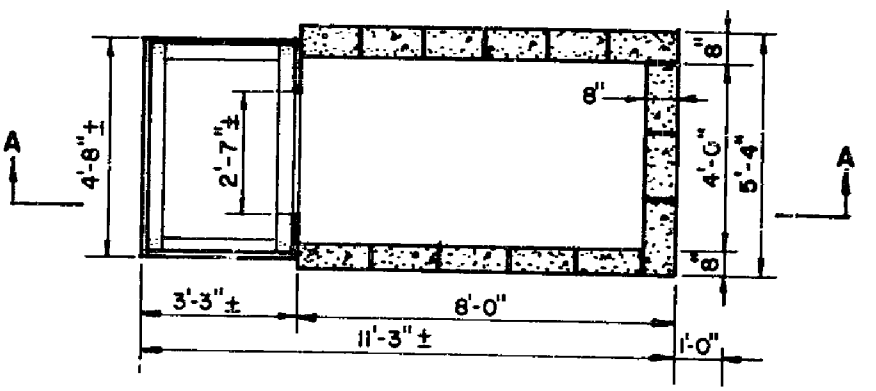

PLAN

21.1d

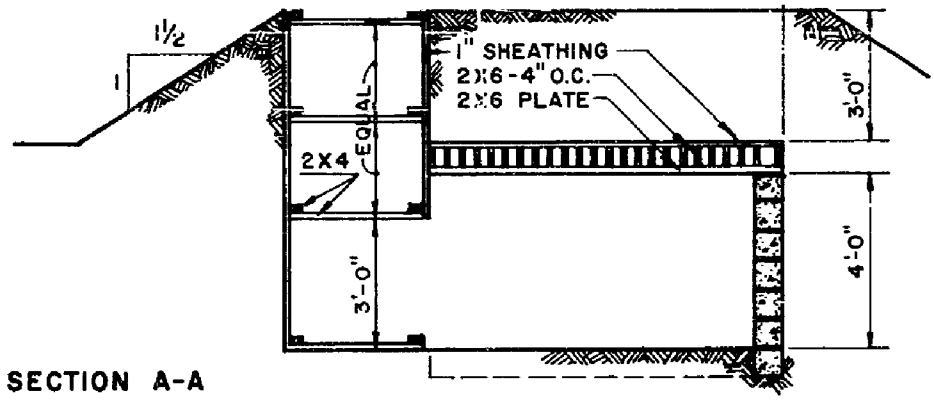

21.1d — Wood Covered Trench

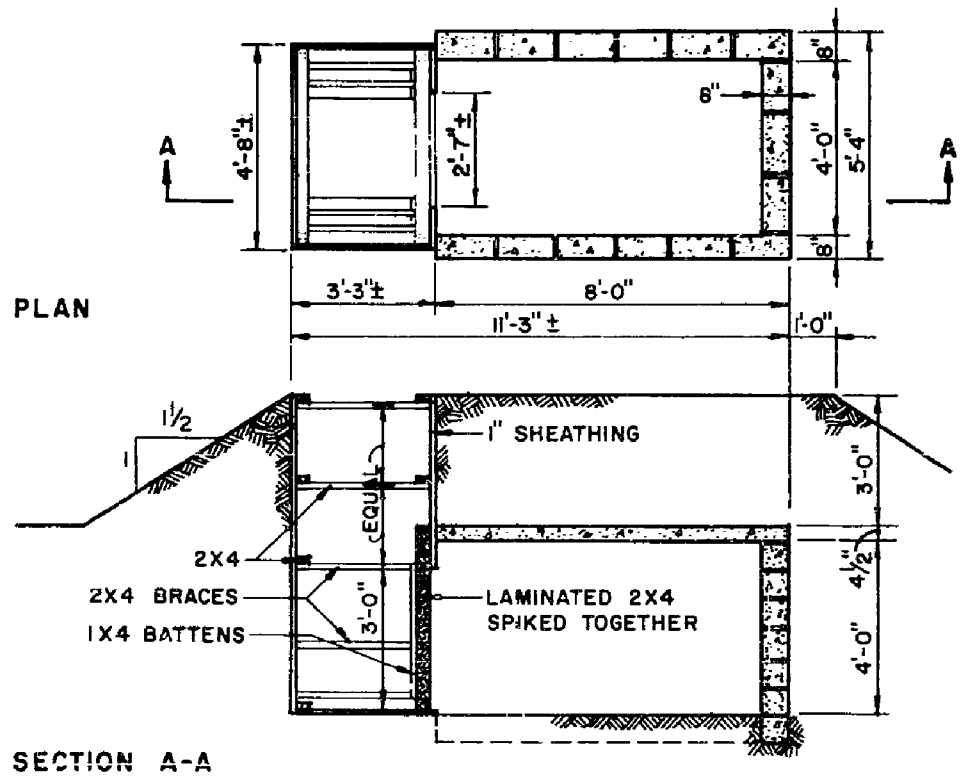

21.1e — Covered Trench With Closed Shaft Entrance

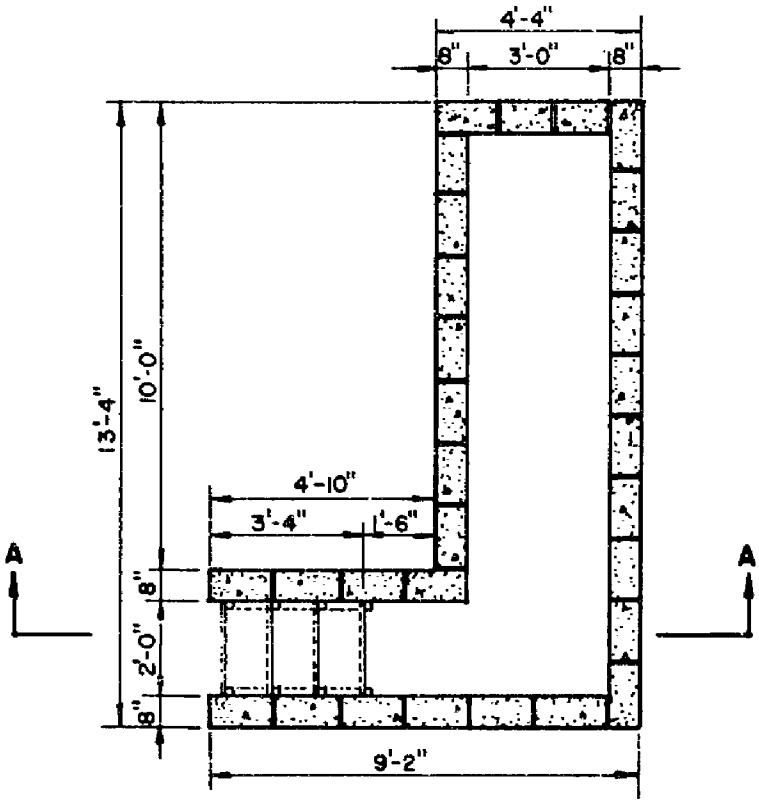

PLAN

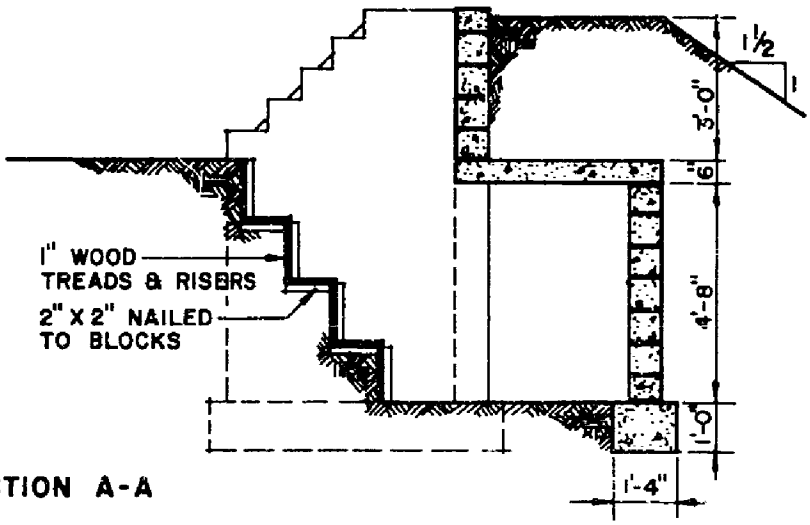

SECTION A-A

21.1f — Block-Wall Basement Exit

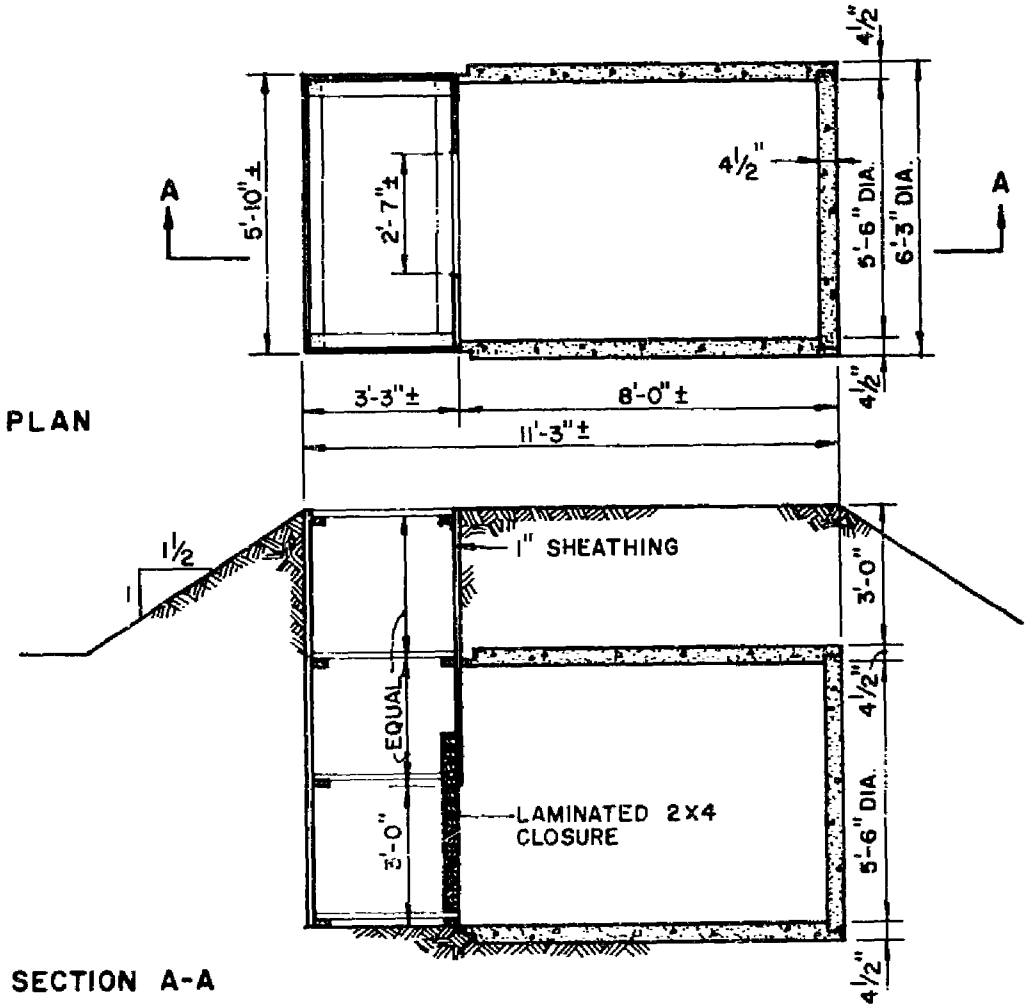

21.1g — Concrete Pipe With Closed Shaft Entrance

SOIL CHARACTERISTICS:
No soil data stated; however, backfill was typical of Yucca Flat at the Nevada Test Site. The alluvium in Yucca Flat varies in character from clay and silt-sized particles, to cobbles and boulders. The composition of this material is chiefly limestone and volcanic tuff with smaller amounts of other volcanics, quartzite, conglomerate and sandstone. The alluvium is poorly consolidated except where the particles are cemented by caliche or where beds of caliche exist. Density of the alluvium varies from 1.3 to 1.8 kilograms per liter; that is, 88 to 112 pounds per cubic foot.

PREVIOUS TESTING:
Similar structures were tested in Operation Buster-Jangle, Project 9.1a, at the Nevada Test Site in October and November 1951. See WT-359 for details. (See text page 35)

SHOT:

	Shot 1
Name:	"Annie"
Type:	Tower
Yield:	16.4 KT
Height of Burst:	300 feet
Date:	17 March 1953

TEST LAYOUT:

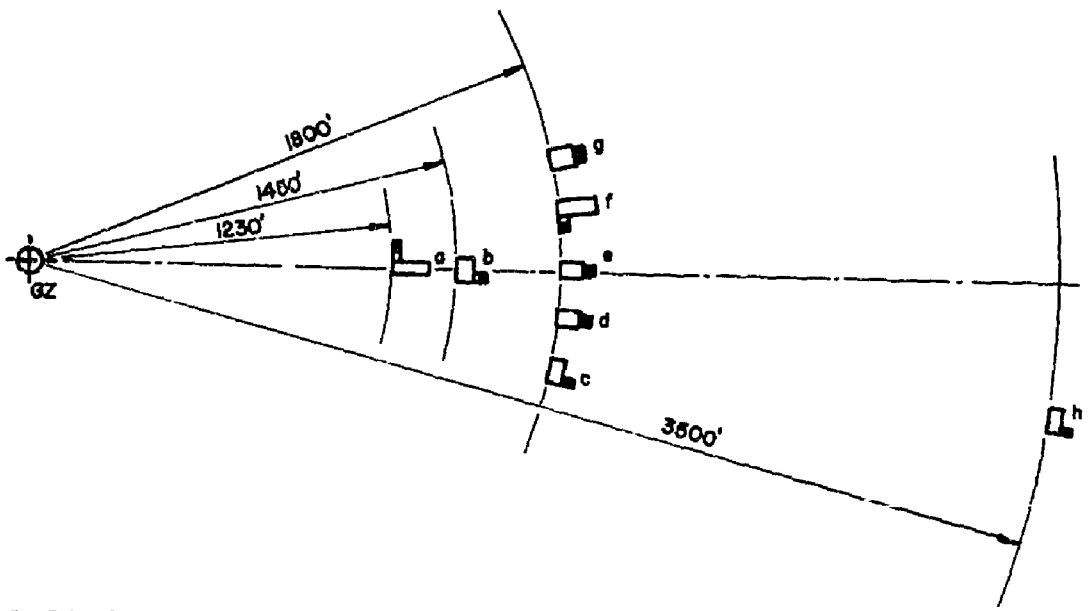

LOADING:

		range (feet)	overpressure (psi)
21.1a	Reinforced Concrete Basement Exit	1230	23
21.1b	Covered Trench (4'-6" cover)	1450	15
21.1c	Covered Trench (3'-0" cover)	1800	10
21.1h	Covered Trench (3'-0" cover)	3500	not available
21.1d	Wood Covered Trench	1800	10
21.1e	Covered Trench With Closed Shaft Entrance	1800	10
21.1f	Block-Wall Basement Exit	1800	10
21.1g	Concrete Pipe With Closed Shaft Entrance	1800	10

SUMMARY:

The concrete roof slabs of the structures were designed to resist a dynamic load with the maximum midspan deflection limited to 1/30 of the span. However, since no cracking occurred it was assumed that deflections were in the elastic range. The roof joist on the wood-covered trench suffered no damage, but faulty construction caused failure of one wall. The overpressure was approximately half of the expected value.

OTHER REMARKS:

Test data is not sufficient to permit any valid conclusions on structural response to be drawn. Only two shelters (21.1e, Covered Trench With Closed Shaft Entrance and 21.1g, Concrete-Pipe With Closed Shaft Entrance) were designed to prevent blast pressures from entering the shelter. The fact that the other structures were "open" and that no internal transient pressure measurements were made, limits the value of information for structural dynamics correlation purposes.

NOTE:

The letters, a through h, used in this report to reference the individual shelters do not occur in the original report. In the report the shelters were referenced by name only.

OPERATION: Castle

PROJECT: Test Support Station

STRUCTURE IDENTIFICATION: Station 200

CROSS REFERENCE INDEX:
TEST SUPPORT STATIONS — Massive Reinforced Concrete Semi-Buried Shelter

This is the same structure identified as Ivy 200; consequently, complete description and other data is included under Operation Ivy, Project 200. (See text page 44)

OPERATION: Castle

PROJECT: Test Support Station

STRUCTURE IDENTIFICATION: Station 1810.05

CROSS REFERENCE INDEX:
TEST SUPPORT STATIONS — Massive Reinforced Concrete Semi-Buried Shelter

This is the same structure identified as Ivy 520, consequently complete description and other data is included under Operation Ivy, Project 520. (See text page 55)

OPERATION: Teapot

PROJECT: 3.3.1

STRUCTURE IDENTIFICATION: 3.3.1

CROSS REFERENCE INDEX:
LOADING-RESPONSE EXPERIMENTAL SYSTEMS — Buried Flexible Measuring Devices

REPORT REFERENCES:
WT-1125
Defense Atomic Support Agency
Washington 25, D.C.

LOCATION: Area T-10a, Yucca Flat
Nevada Test Site

OBJECTIVES:
To determine the influence of certain parameters on the normal (perpendicular) loads generated against a structure by earth-propagated pulses resulting from underground explosions.

STRUCTURAL DESCRIPTION:
Fifteen flexible measuring devices consisting of a forward mass, 30 inches square, connected by torque tubes to a relatively heavy rear supporting mass were placed in the earth so that the forward mass was normal to the earth propagated pulses.

STRUCTURAL DETAILS: (See Page 85)

SOIL CHARACTERISTICS:
Great care was taken during the back filling operation in the field to try to restore the earth to its undisturbed condition. In backfilling, the soil was tamped to 90 percent optimum density between the devices and the undisturbed soil on the sides, front, and back, which was about 2 feet all around. Wood, concrete, and vegetable matter were screened from the soil and precautions were taken by constant supervision in backfilling to see that no dust or rocks were able to jam the devices.

STRUCTURAL DETAILS:

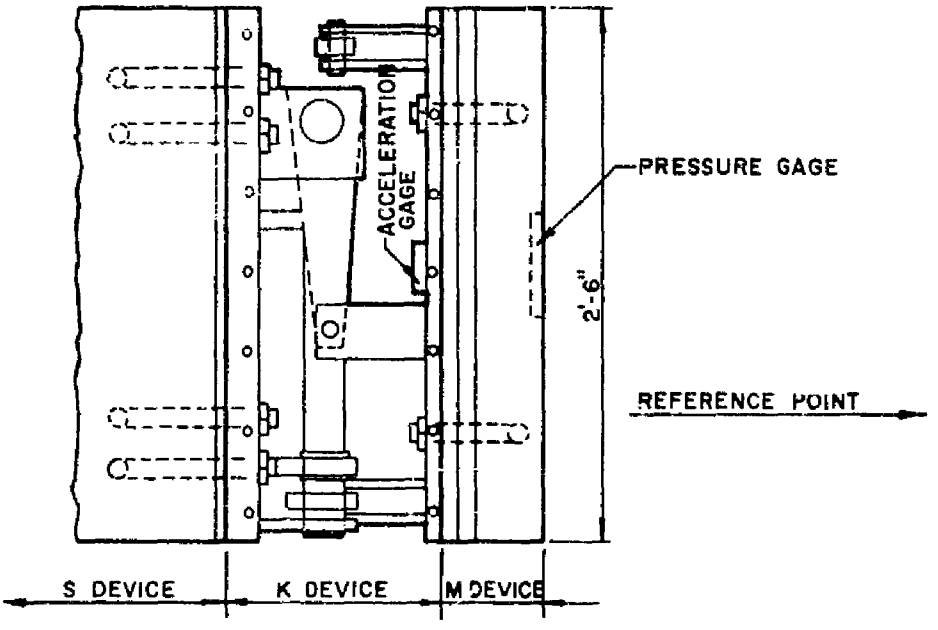

ELEVATION OF ASSEMBLED S, K, M DEVICES

PREVIOUS TESTING: None

SHOT:

	Shot 7
Name:	ESS
Type:	Underground
Yield:	1.1 KT
Depth of Burst:	67 feet
Date:	23 March 1955

TEST LAYOUT:

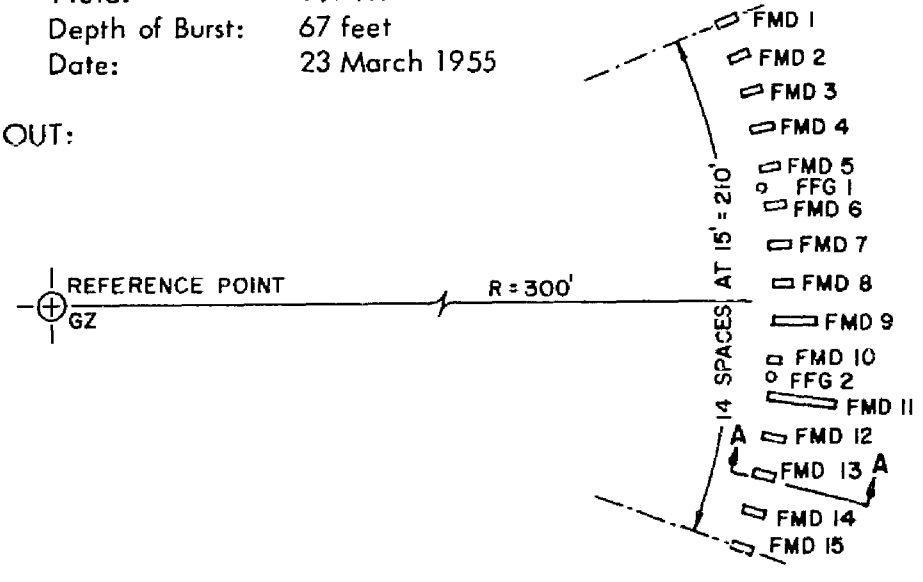

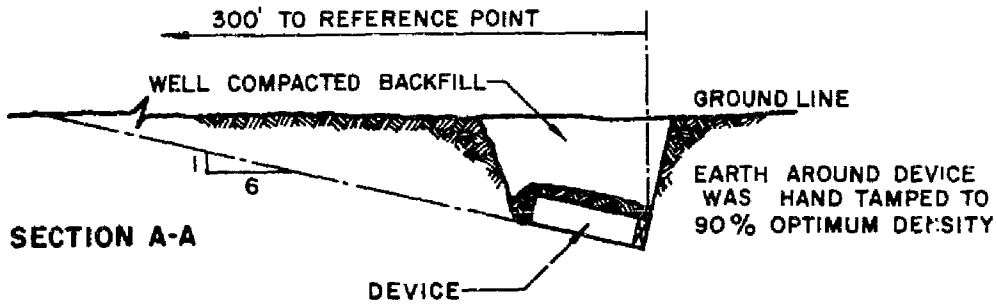

LOADING:

Shot 7:

Peak pressure:	Varied from 102 psi to 5.3 psi as recorded by pressure gages mounted on the front of the 15 flexible devices
Duration:	Varied from 685 msec. to 400 msec.

SUMMARY:

Conclusions drawn were that the wide variation in peak gage pressures, at comparable distances, seems to indicate a considerable variation in the physical phenomenon between points, even when the points are relatively close together. This seems to be supported by all pressure data obtained from the shot fired for this experiment as well as pressure data obtained from all previous shots, regardless of type. Consequently, it is concluded that an individual measurement on a small portion of any area probably will not give proper loading functions for that area.

SUBSEQUENT TESTING: None

OPERATION: Teapot

PROJECT: 3.3.2

STRUCTURE IDENTIFICATION: 3.3.2

CROSS REFERENCE INDEX:
MISCELLANEOUS STRUCTURES — Buried Reinforced Concrete Box (Open Top)

REPORT REFERENCES:
WT-1126
Defense Atomic Support Agency
Washington 25, D.C.

LOCATION: Area T-10a, Yucca Flat
Nevada Test Site

OBJECTIVES:
(1) To obtain data on the effect of a large-scale underground explosion of a nuclear device on buried structures; (2) to use these data to develop design criteria for underground structures; and (3) to correlate the results with previous test results obtained both with relatively small high-explosive charges (primarily at Dugway, Utah) and with results obtained from the Jangle underground atomic shot.

STRUCTURAL DESCRIPTION:
The two boxes were a modified version of the 0.5-scale Type A box tested at Dugway, Utah; and were located at horizontal distances of 200 to 250 feet from ground zero. The near box was designated 3.3.2 a1; and the far box, 3.3.2 a2. Each box consisted of four vertical, reinforced concrete walls, without roof or floor; and was cast in place in an open cut and was backfilled subsequently so that its top was 3 feet 9 inches below the original ground level.

The outside dimensions of the boxes were 12 feet 6 inches square by 8 feet 10 inches high. The front and rear walls were 24 inches thick, while the side walls were 12 1/2 inches thick. The walls were reinforced with both tension and compression steel. For the main steel in the front and rear walls, the ratio of the area of the steel to the area of the concrete was 0.6 percent for both tension and compression reinforcement.

STRUCTURAL DETAILS:

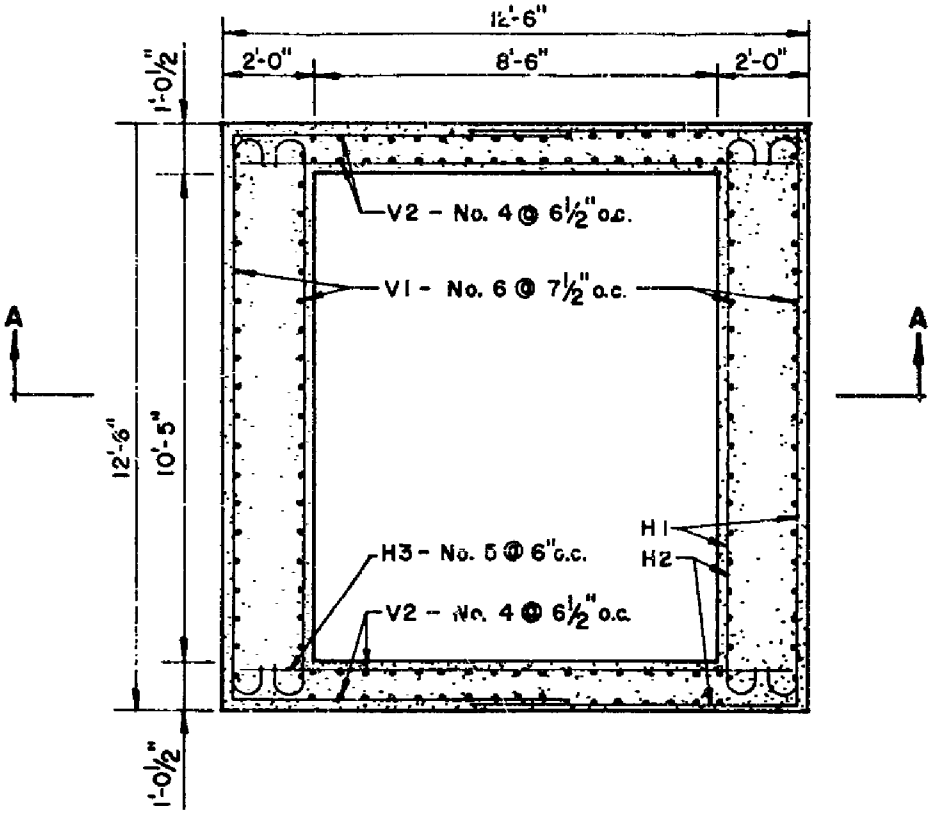

PLAN

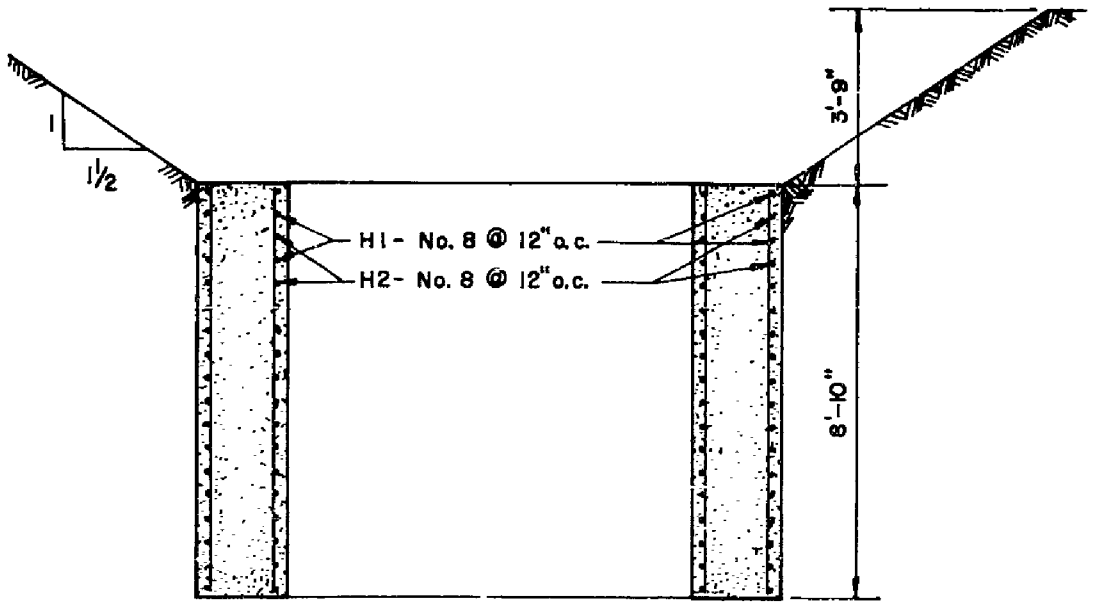

SECTION A-A

SOIL CHARACTERISTICS:
The excavation for these structures was made in a manner that the soil around the structures would be disturbed a minimum amount. That is, the cut was made as small as possible; and it had nearly vertical sides. The base of each structure was placed on undisturbed soil.

The excavated material was used in the backfill. This material was dampened and was placed in the cut in approximately 6 inch layers. Hand pneumatic tampers were used to compact each layer.

No rigid controls were used in placing the backfill, because it is believed that the heterogeneous character of the soil did not warrant it. The soil is naturally heterogeneous, and this condition was compounded by excavation and construction performed during Operation Jangle.

Despite the lack of rigid control, it generally is believed that the density of the backfill was considerably greater than the density of the surrounding soil. During the post-test surveys, it was intended that standard penetration tests be made in the backfill and in the surrounding soil to determine relative densities. However, it was impossible to make these tests because of the rocky nature of the soil and its degree of compaction.

PREVIOUS TESTING: None
However, related structures were included in Operation Buster-Jangle, Project 3.2 (WT-387) (See text page 16)

SHOT: Shot 7

Name:	ESS
Type:	Underground
Yield:	1.1 KT
Depth of Burst:	67 feet
Date:	23 March 1955

TEST LAYOUT:

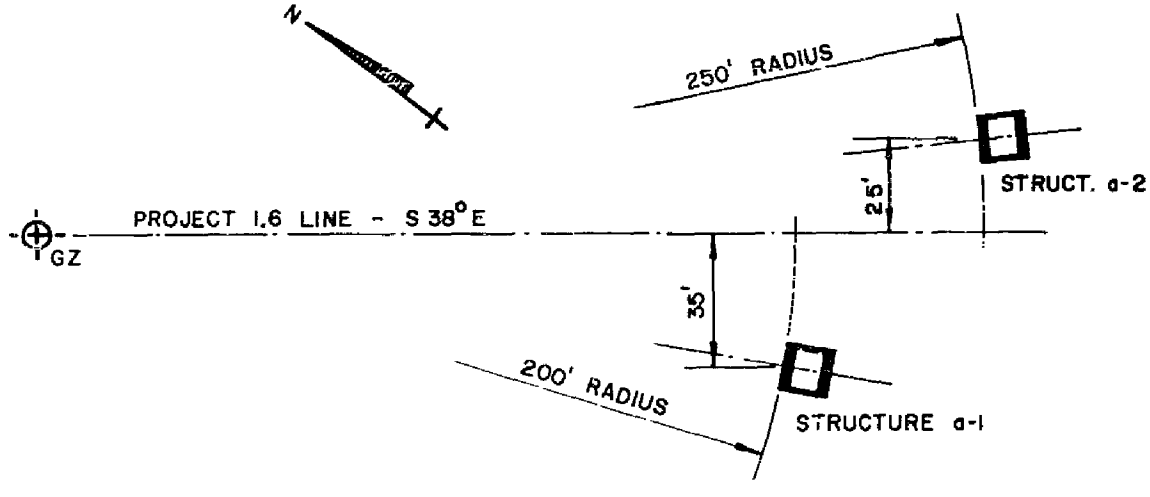

LOADING:

	location		measured peak	predicted peak	units
Structure Acceleration	3.3.2 a1	Front Wall	4.3[a]	190	g
		Rear Wall	6.4[a]	95	g
		Side Wall	7.2[b]	11.5	g
Structure Acceleration	3.3.2 a2	Front Wall	1.7[a]	60	g
		Rear Wall	3.3[a]	30	g
		Side Wall	1.9[b]	2.5	g
Structure Pressure Gage	3.3.2 a1	Front Wall	33.0	510	psi
		Rear Wall	42.0	250	psi
	3.3.2 a2	Front Wall	53.0	165	psi
		Front Wall	50.0	165	psi
		Rear Wall	30.0	80	psi
		Side Wall	18.0	55	psi

[a] The electronic record had a very small amplitude trace. Because of this, the values are not reliable.

[b] Acceleration is radial from ground zero.

SUMMARY:
The crater formed by the explosion was unexpectedly small, being 146 feet in radius, so that the two structures were approximately 50 and 100 feet from the edge of the crater. The pressure measured on the front wall of the structure at the 200 foot range was approximately one-fourth of the stress of 125 psi in the medium; while the pressure measured on the front wall of the structure at the 250 foot range was slightly greater than the medium stress of 41.5 psi. The structures responded primarily as rigid bodies and followed the soil motion; consequently there was no structural damage. The permanent movements of the boxes were 3.8 feet and 0.5 foot, horizontally, away from the point of burst.

It is concluded that buried structures of the type tested are difficult to damage structurally, unless located within or close to the edge of the crater and that, for structures outside of the crater, problems created by large earth movements and throwout might be critical for structures relatively close to the edge of the crater.

SUBSEQUENT TESTING: None

OPERATION: Teapot

PROJECT: 3.4

STRUCTURE IDENTIFICATION: 3.4 a, 3.4 b, 3.4 c

CROSS REFERENCE INDEX:
LOADING RESPONSE EXPERIMENTAL SYSTEMS — Buried Steel Beam Response Elements

REPORT REFERENCES:
WT-1127
Defense Atomic Support Agency
Washington 25, D.C.

LOCATION: Frenchman's Flat
Nevada Test Site

OBJECTIVES:
To determine the nature of forces transmitted through earth to buried structures from the explosion in air of an atomic bomb; and to determine the variation of these forces with the depth of transmission through earth and with the flexibility of the structural elements subjected to these forces.

STRUCTURAL DESCRIPTION:
Three structures (3.4 a, 3.4 b, and 3.4 c) composed of concrete boxes with 8 feet long simply supported steel beam strips as roofs (the beam strips for each of the structures include members of each of three different degrees of flexibility); the earth cover was 1 foot, 4 feet, and 8 feet, respectively. Three of the plastic or "P Beams" in each of the structures were altered from those tested in Operation Upshot-Knothole as shown in Structural Details.

STRUCTURAL DETAILS: (See Page 92)

SOIL CHARACTERISTICS:
Tan silt with a trace of clay. In its natural state the soil is very friable. It is horizontally stratified, has vertical joints which are local zones of weakness, and contains

many voids. Limited tests of the undisturbed soil in this area, prior to the Upshot-Knothole tests, gave values of 86.6 pcf for the dry density, 10.6 percent for the water content, and 95.5 pcf for the wet density. The unconfined compressive strength determined on three samples gave results of 1.1, 2.1 and 4.3 tons per square feet.

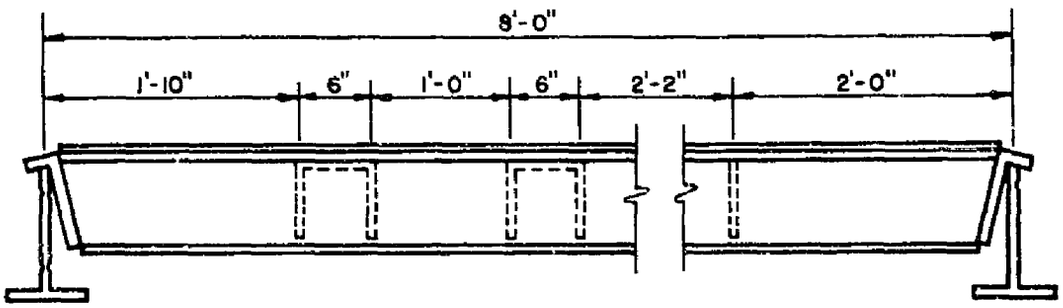

TYPICAL ELEVATION

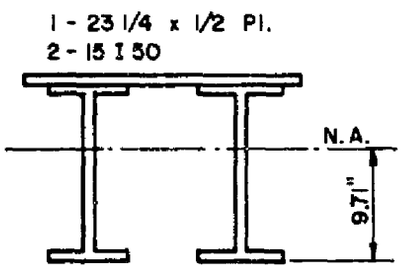

E BEAM

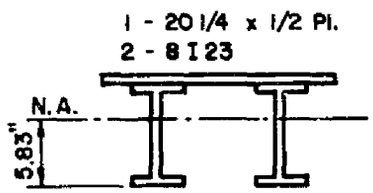

M BEAM

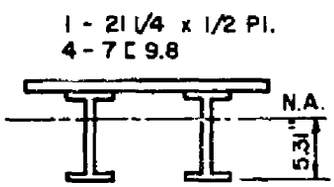

P BEAM

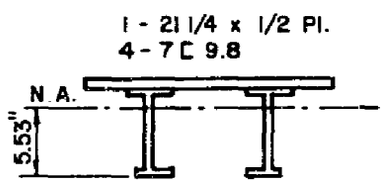

MODIFIED P BEAM
(1 1/2" REMOVED FOR 1' EACH SIDE OF CENTERLINE)

SECTIONS

PREVIOUS TESTING: Operation Upshot-Knothole, Project 3.8 (WT-727)(pp 63) In Upshot-Knothole, the structures were tested in two shots, the first producing an overpressure level on the ground surface of about 15 psi; and the second, about 63 psi. In the first test, no damage or permanent deformation was expected or observed. In the second shot, the pressures were of about the order of magnitude expected in the design; and only small permanent deflections were obtained. One of the main reasons that only small deflections were obtained was that one set of beam strips (the "plastic" beams intended to be considerably weaker than the others) were fabricated from steel having a considerably higher yield point than was originally desired. Therefore only two different yield strengths existed rather than the three that had been planned

SHOT:

	Shot 12
Name:	MET
Type:	Tower
Yield:	22 KT
Height of Burst:	400 feet
Date:	15 May 1955

TEST LAYOUT:

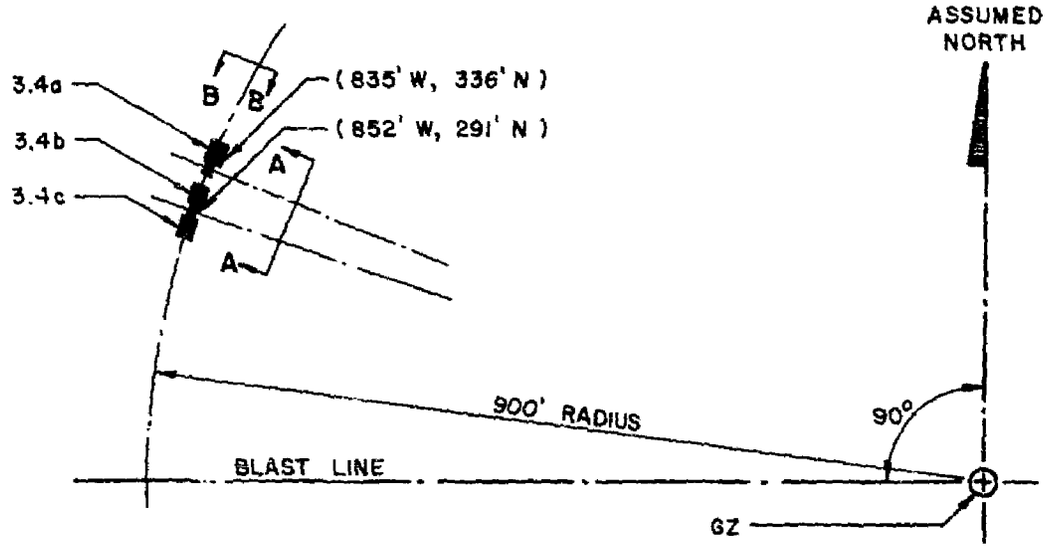

SITE PLAN

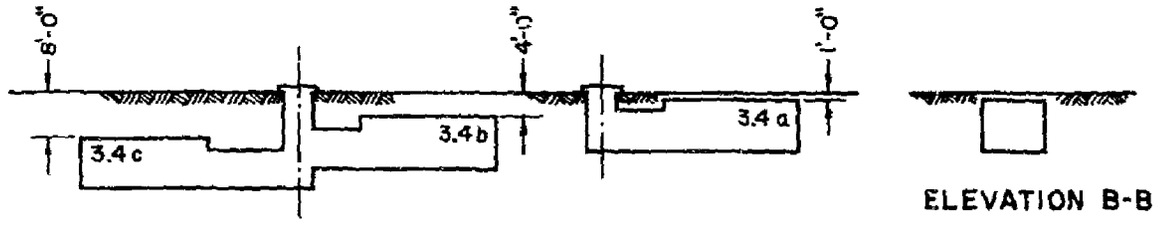

ELEVATION B-B

ELEVATION A-A

LOADING:

Shot 12:

Precursor: Rise Time — essentially zero
Overpressure — 52 psi
Duration — 30 msec

Main Pulse: Rise Time — 20 msec
Peak Overpressure — 90 psi
Duration — 90 to 100 msec

SUMMARY:

Each structure had beam strips designed so that some would respond elastically, some plastically, and some would be in the intermediate range. Beam strips were instrumented to measure transient deflections, accelerations, and beam strip reactions. Permanent strains, peak transient strains, and permanent deflections were also measured on the beam strips. Transient air pressures were measured at the ground surface. Results obtained indicate that the design of roofs for shallowly buried shelters should be based on the overpressures at the ground surface when the depth of cover is no greater than the roof span or when the structure is capable of moving with the surrounding media.

OTHER REMARKS:

The analysis of the test data showed that, with respect to their behavior, the beams could be divided into two general groups. The response of all of the beams tested in Upshot-Knothole, the beams in the shallowest structure, and all of the elastic beams tested in Teapot indicated that there was no attenuation of pressure with depth. The soil cover only added to the mass of these beam strips. The other group of beams includes the more flexible plastic and intermediate beams tested in Teapot which were buried at a depth of cover greater than one-half the span of the beams. The backfill over these beams was not disturbed over a two-year period so that it had become well consolidated. The response of these beams was very close to or slightly less than the deflection corresponding to a static loading equal to the surface overpressures.
(See Other Remarks — Operation Plumbbob, Project 3.4)

SUBSEQUENT TESTING: Operation Plumbbob, Project 3.4 (WT-1423) (See text page 132)

OPERATION: Teapot

PROJECT: 3.6

STRUCTURE IDENTIFICATION: 3.6

CROSS REFERENCE INDEX:
EARTH-COVERED AND SEMI-BURIED STEEL — Earth-Covered Corrugated Steel Arch Shelter

REPORT REFERENCES:
WT-1128
Defense Atomic Support Agency
Washington 25, D.C.

LOCATION: Frenchman's Flat
Nevada Test Site

OBJECTIVES:
To determine the degree of protection that earth cover offers to aboveground structures; and, particularly, to test the adequacy of an adaptation of a corrugated steel arch ammunition magazine, similar to Upshot-Knothole Building 3.15, as a personnel shelter were the primary objectives of Project 3 6 of Operation Teapot. Both the blast resistance and the radiation resistance of such structures were objectives of the test Because the structure tested on Operation Upshot-Knothole sustained no significant damage, it was an objective of the Teapot test to produce at least incipient collapse so that the capabilities of this design would be bracketed. The long-range objectives were to extend the knowledge of the benefits of earth cover in protecting aboveground structures and to obtain further insight into the mechanism of these benefits toward the optimum design of aboveground shelters.

A further supplementary objective was to compare the performance of models with that of full-scale structures, in order to permit more economical design of future tests.

STRUCTURAL DESCRIPTION:
Structure 3.6 was a 25 feet by 48 feet steel arch manufactured by Armco Drainage and Metal Products.

Structure Upshot-Knothole 3.15 was a 25 feet by 48 feet steel arch manufactured by Armco Drainage and Metal Products. It was different from Structure 3.6 in its details.

Models No. 1 through No. 3 were corrugated steel, 1/4 scale models.

Models No. 4 through No. 6 were corrugated aluminum, 1/4 scale models.

STRUCTURAL DETAILS:

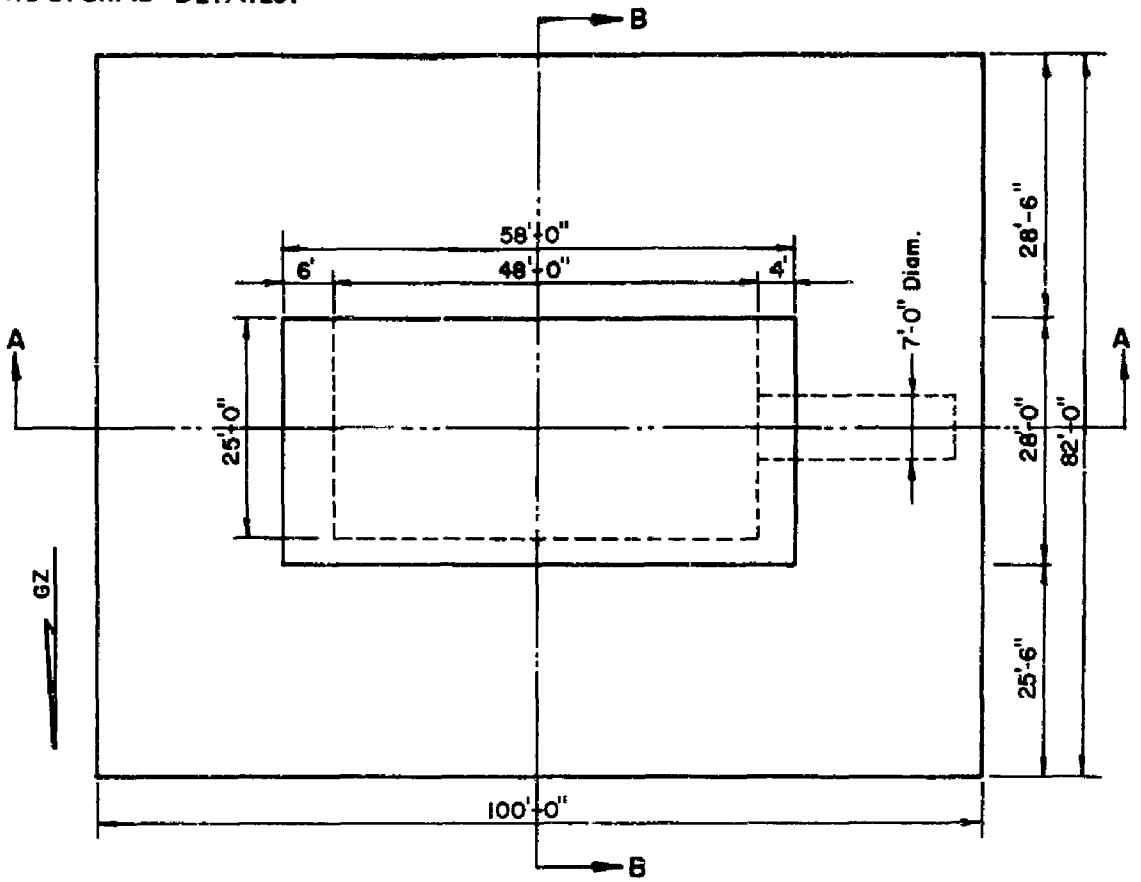

PLAN

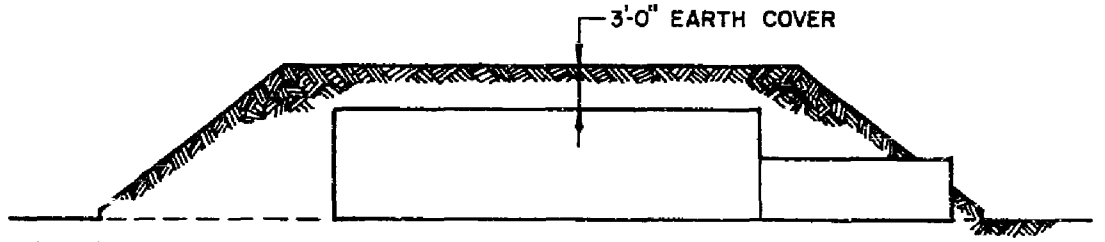

SECTION A-A

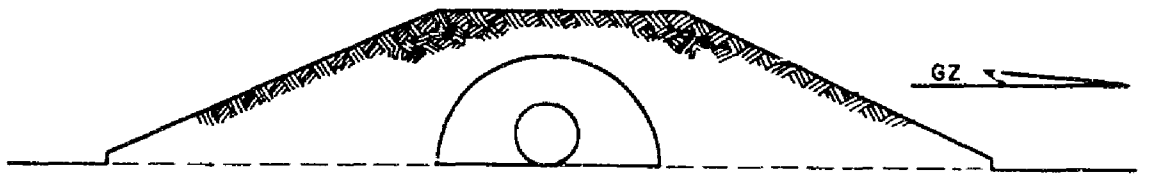

SECTION B-B

Structure 3.6:

Dimensions — 25 feet by 48 feet
Steel Plates — 8 gage multiplate
Corrugation — nominal 1 3/4 inch by 6 inches
Foundation — 1 foot wide, 2 feet deep
Diameter of Arch — 25 feet
Diameter of Entrance Tunnel — 84 inches
Total Weight of Structure — 22,000 pounds

Structure Upshot-Knothole 3.15:

Dimensions — 25 feet by 48 feet
Steel Plates — 10 gage multiplate
Corrugation — 2 inches by 6 inches
Foundation — 1 foot wide, 2 feet deep
Diameter of Arch — 25 feet
Diameter of Entrance Tunnel — 84 inches

Models:

Dimensions — 1/4 size of structure 3.6
Steel — 3 models were steel
Aluminum — 3 models were aluminum
Corrugation — 2 5 inches by 0.5 inches

SOIL CHARACTERISTICS:

Brown sand, well-graded from very fine to very coarse; random stones to 5 inches in diameter.

PREVIOUS TESTING:

Structure Upshot-Knothole 3.15 was previously tested in Operation Upshot-Knothole, Project 3.15 (WT-729). As damage had been small, this structure was available for retesting during Operation Teapot. (See text page 70)

SHOT: Shot 12

Name:	MET
Type:	Tower
Yield:	22.0 KT
Height of Burst:	400 feet
Date:	15 April 1955

TEST LAYOUT:

structure	range from GZ (feet)
3.6	1,500
3.15 (Upshot-Knothole)	2,300
Model 1	1,400
Model 2	1,500
Model 3	2,000
Model 4	2,000
Model 5	2,500
Model 6	3,000

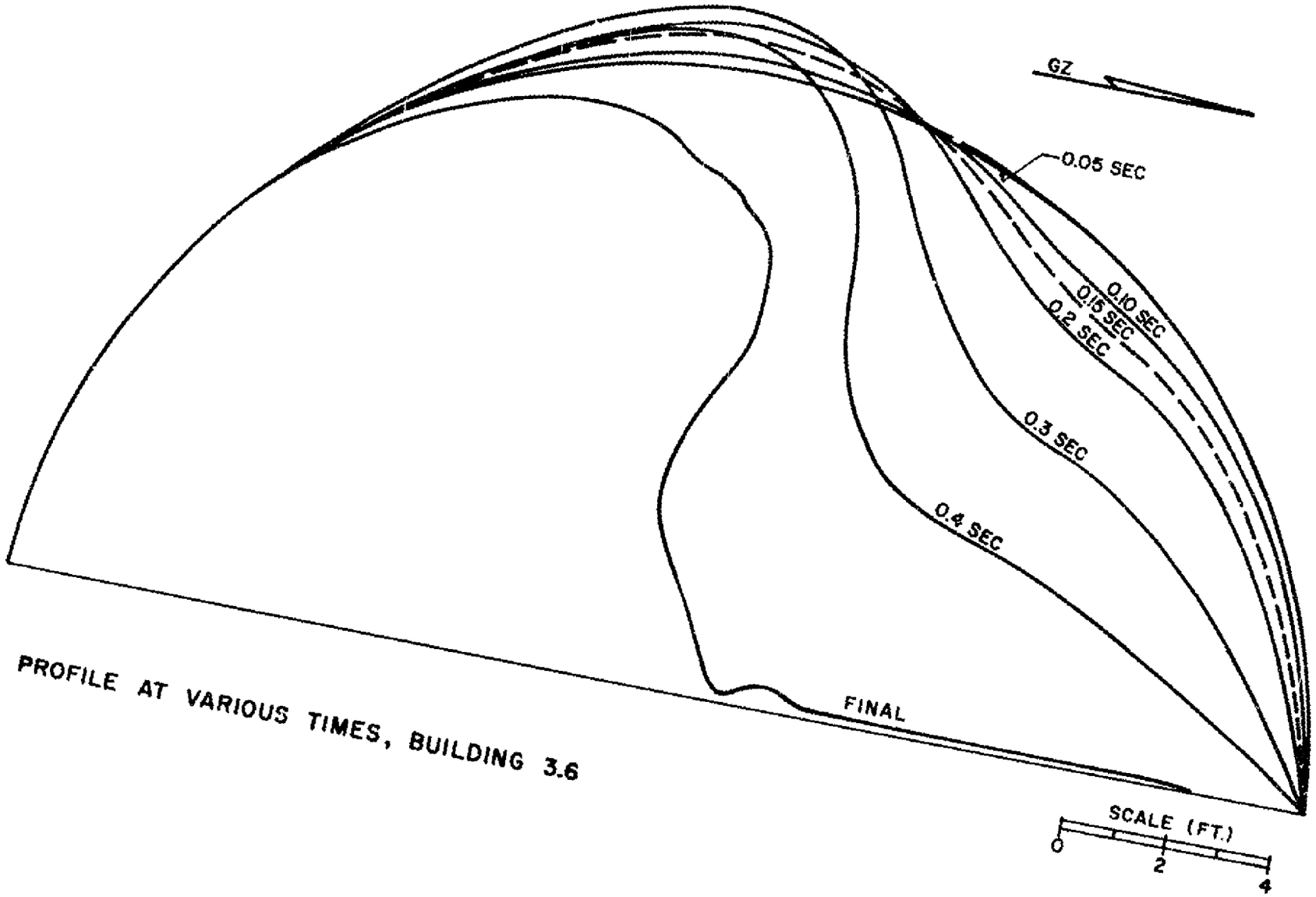

PROFILE AT VARIOUS TIMES, BUILDING 3.6

LOADING:
(Overpressure at ground surface)

structure	peak overpressure (psi)	dynamic overpressure (psi)
3.6	30	170
3.15	11	30
Model 1	35	200
Model 2	30	180
Model 3	19	64
Model 4	19	64
Model 5	9	14
Model 6	8	2

SUMMARY:
The dynamic pressures produced by Shot 12 at the close-in ranges of most interest to Project 3.6 were considerably larger than had been predicted. The main structure of Project 3.6 was collapsed by these forces, but there is support for the belief that it would have withstood the predicted values successfully.

The performance of the models was in accord with predictions. Of the three steel models which were intended to collapse at the same values of applied external pressure as Structure 3.6, the two at 1,400 feet and 1,500 feet, which received pressures similar to or larger than those applied to Structure 3.6, collapsed. The one at 2,000 feet, which received roughly one third the pressure applied to Structure 3.6, remained standing. Of the three aluminum models which were expected to fail under pressures roughly one quarter of those which would produce failure in the main building, the one at 2,000 feet did fail. The pressure at the structure was roughly twice that expected to produce failure. Those at 2,500 feet and 3,000 feet, where the maximum pressures were less than one quarter those applied to Structure 3.6, experienced trivial deflections.

Structure Upshot-Knothole 3.15 withstood forces of 15 percent of those applied to Structure 3.6, with trivial deflections.

OTHER REMARKS:
The drag sensitivity of the earth configuration obviously caused collapse of the Teapot structure.

SUBSEQUENT TESTING: None
Structures which were similar, but with different earth configurations, were tested in Operation Plumbbob, Project 3.3 (WT-1422) and Operation Hardtack, Project 3.2 (ITR-1626). (See text pages 127 and 189)

OPERATION: Teapot

PROJECT: 34.3

STRUCTURE IDENTIFICATION: 34.3 a1, 34.3 a2, 34.3 b1, 34.3 b2

CROSS REFERENCE INDEX:
BURIED CONCRETE — Reinforced Concrete Personnel Shelters

REPORT REFERENCES:
WT-1161, WT-1218
Civil Effects Test Group Report

LOCATION: Areas T-1 and T-4, Yucca Flat
Nevada Test Site

OBJECTIVES:
To evaluate shelter designs proposed by the Federal Civil Defense Administration (FCDA) for protection against nuclear and thermal radiation and blast effects.

STRUCTURAL DESCRIPTION:
Fifty person shelters for industrial and civic use. Four reinforced concrete buried structures were tested.

Two were built for "Apple I" shot and two for "Apple II" shot. One of each pair was modified by a reinforced-concrete partition dividing the shelter into two chambers, each 12 feet by 12 feet by 8 feet. These were tested with doors and escape hatches open, but partially obstructed, (hatches had an air inlet, 19 inches in diameter for "Apple I"; 36 inches in diameter for "Apple II") to meter air into the chambers at a rate satisfactory to the requirements of the biomedical program (Program 33). The room into which the escape hatch entered was referred to as the "slow-fill" room; and the other, as the "fast-fill" room. Three shelters were oriented with the entrance toward ground zero and the fourth (Station 34.3 a2) was rotated 90° counterclockwise.

STRUCTURAL DETAILS:

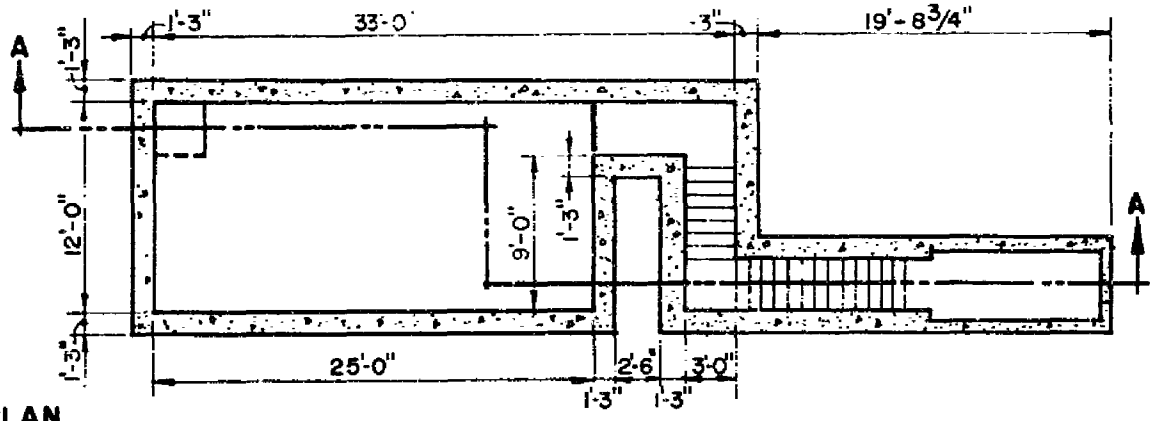

PLAN

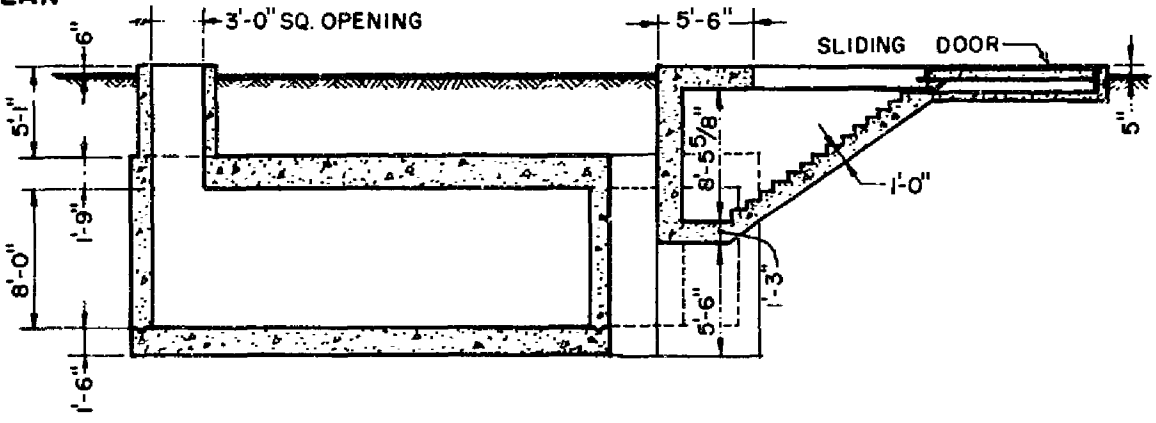

SECTION A-A

Structure 34.3 a1

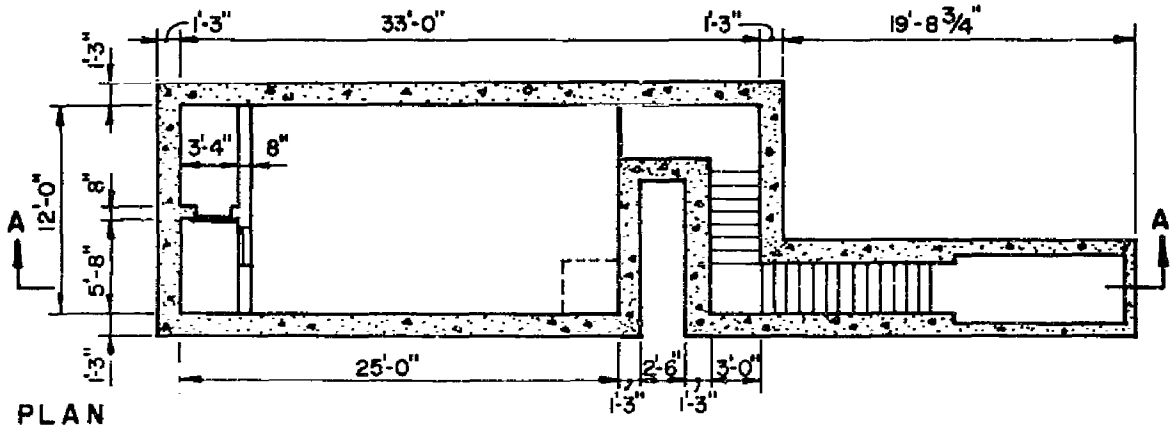

PLAN

Structure 34.3 a2

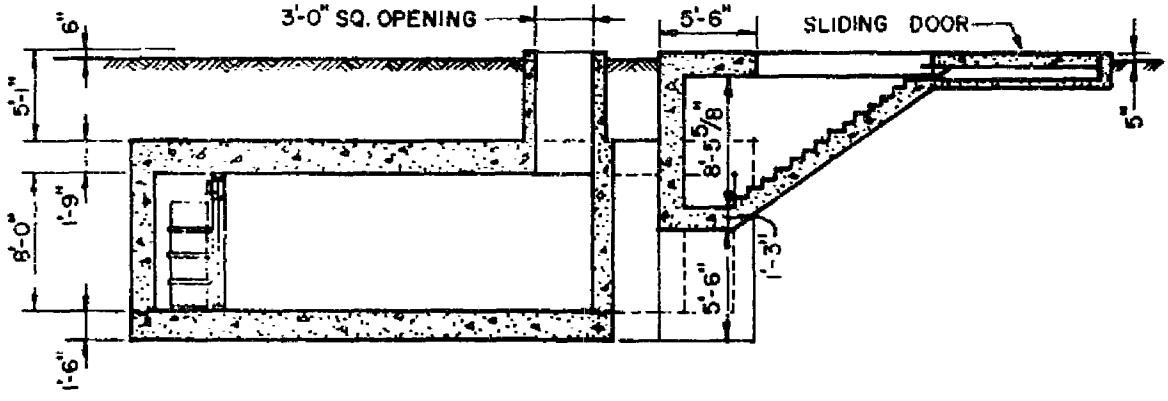

SECTION A-A

Structure 34.3 a2

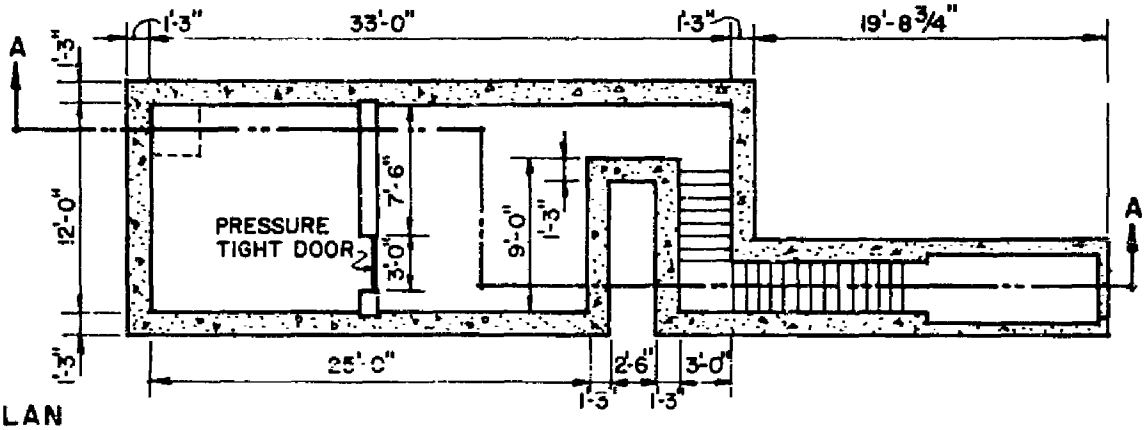

PLAN

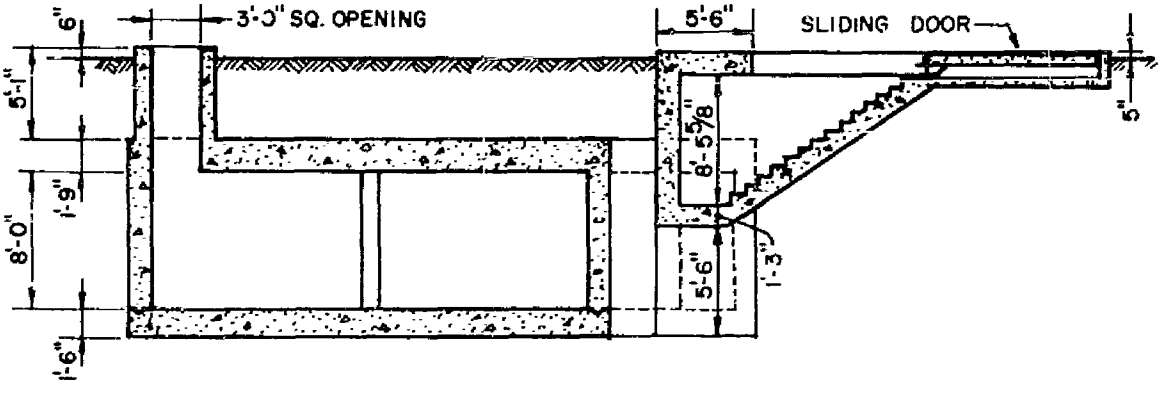

SECTION A-A

Structure 34.3 b1 and 34.3 b2

SOIL CHARACTERISTICS:
No soil data stated; however, the backfill was typical of Yucca Flat at the Nevada Test Site. The alluvium in Yucca Flat varies in character from clay and silt-sized particles, to cobbles and boulders. The composition of this material is chiefly limestone and volcanic tuff with small amounts of other volcanics, quartzite, conglomerate and sandstone. The alluvium is poorly consolidated except where the particles are cemented by caliche or where beds of caliche exist. Density of the alluvium varies from 1.3 to 1.8 kilograms per liter; that is, 88 to 112 pounds per cubic foot.

PREVIOUS TESTING: None

SHOT:

Name:	"Apple I"	"Apple II"
Type:	Tower	Tower
Yield:	14.2 KT	28.5 KT
Height of Burst:	500 feet	500 feet
Date:	29 March 1955	5 May 1955

TEST LAYOUT:

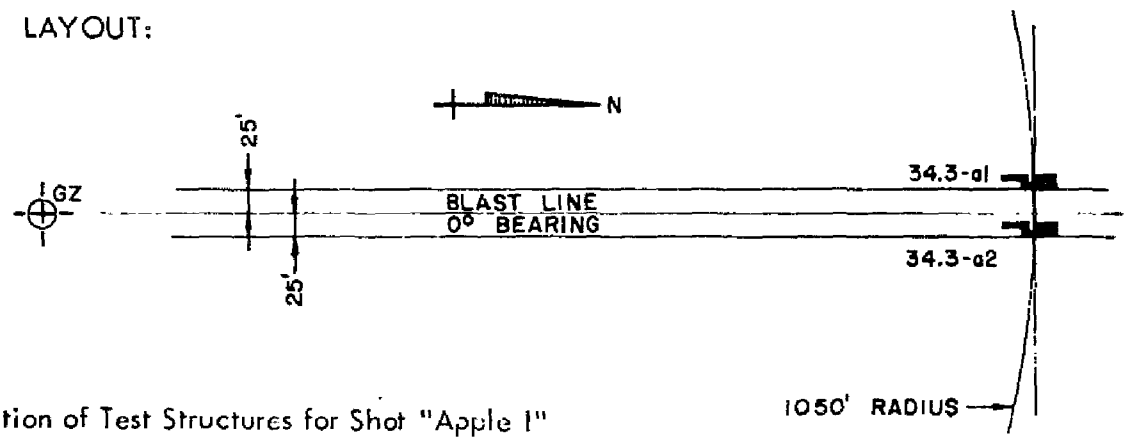

Location of Test Structures for Shot "Apple I"

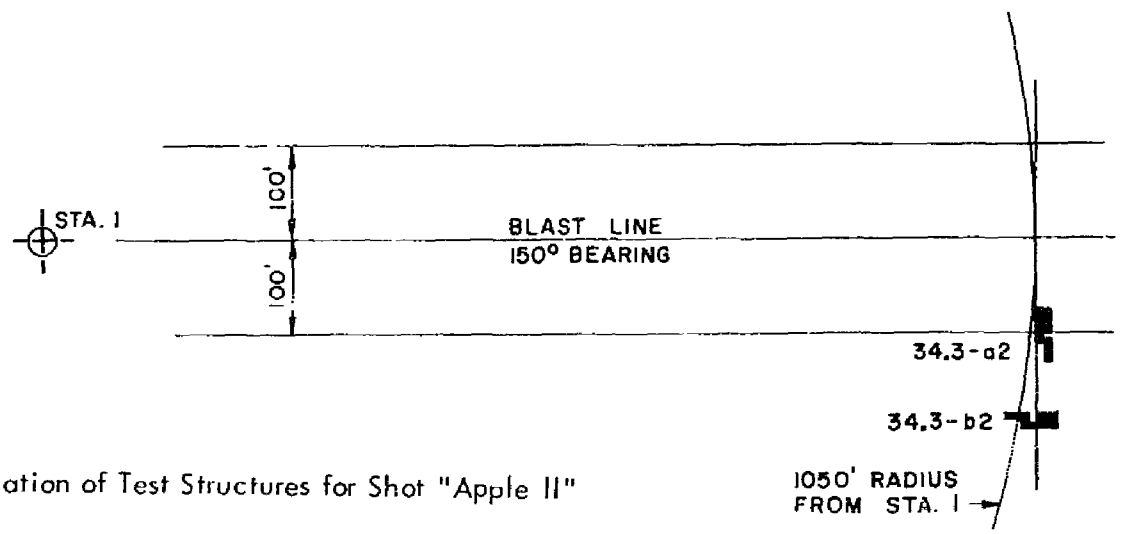

Location of Test Structures for Shot "Apple II"

LOADING:
(Overpressure at earth surface)

structure	Shot "Apple I"	Shot "Apple II"
34.3 a1	47 psi	---
34.3 b1	47 psi	---
34.3 a2	---	91.9 psi
34.4 b2	---	91.9 psi

SUMMARY:
Shot "Apple I" (Structures 34.3 a1 and 34.3 b1):
Neither shelter suffered any visible damage. Appreciable dirt and missiles littered the stair wells. There was a separation between the grout under the steel plates that served as supports for a concrete sliding door and the walls of the stair well of the structural shelter.

The concrete sliding door was used only on the structural shelter (34.3 a1) and showed no evidence of damage. The bars that served to lock the door against an upward motion caused by negative pressures showed no distortion. The rubber mat between the door and the stair well blew onto the steps. The Navy type door and escape hatch in the structural shelter were undamaged.

In the biomedical shelter (34.3 b1), however, differential pressure between the fast-fill and slow-fill rooms was enough to distort the steel angle attaching the door frame to the 1 foot concrete partition wall. Horizontal stiffeners prevented any significant horizontal distortion of the door; but considerable vertical distortion resulted from displacement of the door frame.

Blast force distorted the vents, leaving them bent away from ground zero at an angle of 30°.

Shot "Apple II" (Structures 34.3 a2 and 34.3 b2):
Again, neither shelter suffered structural damage at the peak incident pressure of 92 psi, but dirt and missiles littered the stair wells. The blast tore off the vent tee at the junction of the tee and the vertical pipe.

Station 34.3 a2: The Army Chemical Corps ventilation equipment suffered no discernible damage. The failure of one of the rebound bolts from shearing of the thread indicates that these bolts were loaded to the limit of their capacity at the test pressure. An increase in bolt diameter, and therefore thread capacity, would supply a reserve strength to the rebound connection.

Two wheels of the sliding door were destroyed by missiles, and the rubber door bumper blew into the stair well. Destruction of the wheels can be prevented by widening the door slab to provide a protective lip for the wheels. Despite the loss of the wheels, the door could have been jacked open from the inside. The retaining wall around the concrete door was damaged.

Station 34.3 b2: Because of the larger opening (36 inches instead of 19 inches) in the slow-fill escape hatch, the peak unbalanced pressure between the rooms in the biomedical shelter was proportionately less than in the "Apple I" shelter, and the reinforced door frames in the partition wall sustained no plastic deformation from this unbalanced pressure.

Based on free-soil accelerations in earlier tests, a maximum veeticcl acceleration of 25 g had been expected, but the measured vertical acceleration had a maximum positive (downward) acceleration of only 3.7 g.

SUBSEQUENT TESTING: None

OPERATION: Redwing

PROJECT: Test Support Station

STRUCTURE IDENTIFICATION: Station 1311.04

CROSS REFERENCE INDEX:
TEST SUPPORT STATIONS — Massive Reinforced Concrete Semi-Buried Shelter

REPORT REFERENCES:
WT-1631
Defense Atomic Support Agency
Washington 25, D.C.

LOCATION: Yvonne (Runit)
Eniwetok Proving Grounds

OBJECTIVES: (Non-experimental structure)
Structure used for test support purposes, thus only visual post shot inspections were made.

STRUCTURAL DESCRIPTION:
A massive reinforced concrete detector station mounded with 5 feet of earth cover.

STRUCTURAL DETAILS: (See Page 107)

SOIL CHARACTERISTICS:
Coral sand. Fine to coarse sand with some fine gravel.

PREVIOUS TESTING: None

SHOT:

Name:	"LaCrosse"
Type:	Surface
Yield:	39 KT
Height of Burst:	Surface
Date:	4 May 1956

STRUCTURAL DETAILS:

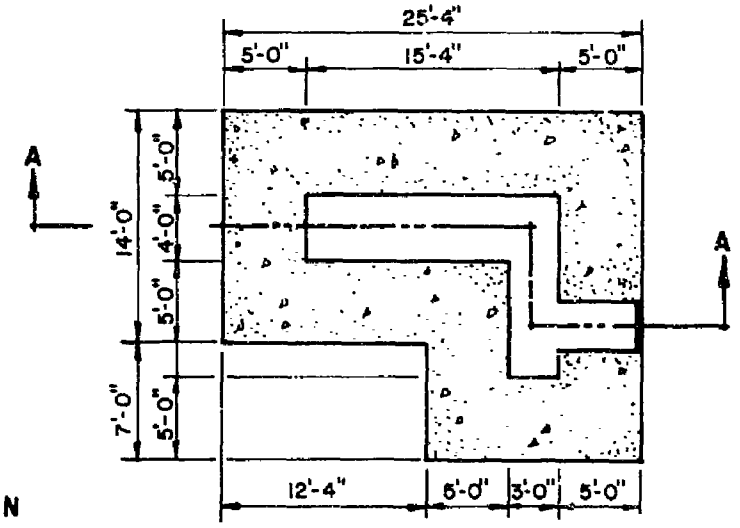

PLAN

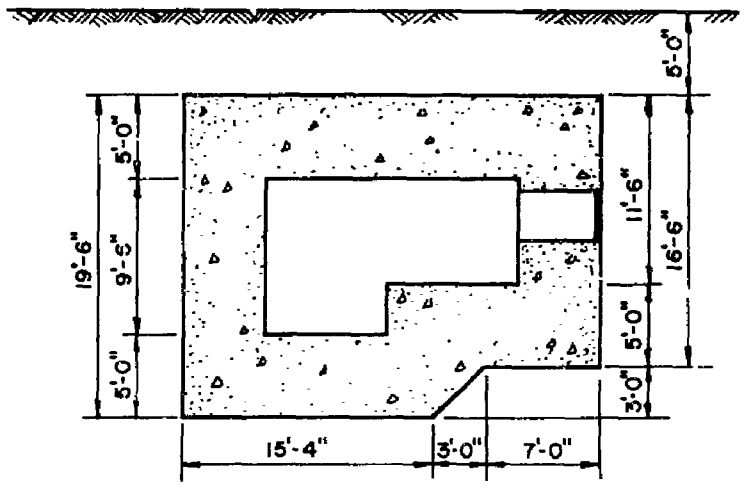

SECTION A-A

TEST LAYOUT: Not available

LOADING:
Peak Overpressure — 1,100 psi

SUMMARY:
Earth cover blown away; no damage.

SUBSEQUENT TESTING: None

OPERATION: Redwing

PROJECT: Test Support Station

STRUCTURE IDENTIFICATION: Station 1611

CROSS REFERENCE INDEX:
TEST SUPPORT STATIONS — Massive Reinforced Concrete Semi-Buried Shelter

This is the same structure identified as Ivy 200; consequently, complete description and other data is included under Operation Ivy, Project 200. (See text page 44)

OPERATION: Plumbbob

PROJECT: 1.7

STRUCTURE IDENTIFICATION: 1.7

CROSS REFERENCE INDEX:
LOADING-RESPONSE EXPERIMENTAL SYSTEMS — Buried Response Cylinders (Drums with Flexible Diaphragms)

REPORT REFERENCES:
ITR-1406
Defense Atomic Support Agency
Washington 25, D.C.

LOCATION: Frenchman's Flat
Nevada Test Site

OBJECTIVES:
To study the factors affecting the transmission of air-blast-induced pressures in soil and the loadings produced on buried structures by pressures in the 50 to 300 psi region. Specifically, to study, extensively, (1) the attenuation of pressure in a sand deposit when the water table is a few feet below the ground surface; (2) the effect of duration of positive phase of blast on the pressure transmitted through such a soil; (3) the effect of structure flexibility on the pressure acting on structures buried in such a soil; and (4) the relationship between horizontal and vertical pressures in such a soil.

STRUCTURAL DESCRIPTION:
Sixty-eight devices composed of rigid cylinders (drums) with deformable diaphragm ends of five different thicknesses. These were buried at depths ranging from zero to twenty feet. Thirty-eight were placed at the 100 psi location, fifteen at 320 psi, and fifteen at the 50 psi location. Most of the drums had a vertical orientation, but a few had other orientations. The double ended drums were two feet in diameter and two feet in length.

STRUCTURAL DETAILS:

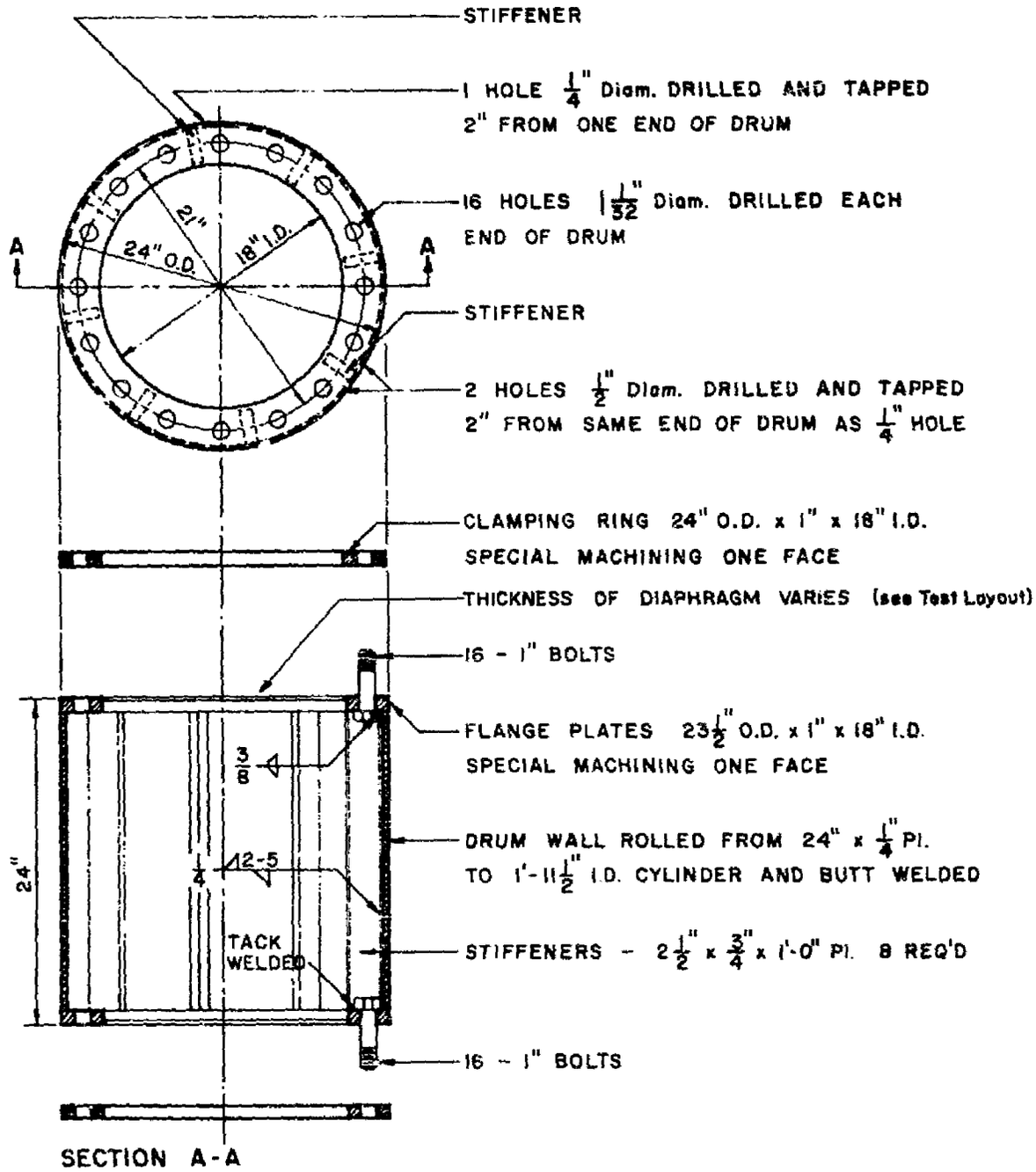

SOIL CHARACTERISTICS:
The soil of Frenchman's Flat is a tan silt with a trace of clay which, in its natural state, is very friable. The natural soil has a well-developed system of both horizontal and vertical joints. When water is added to the backfill material, a considerable amount of mixing is required to obtain a uniform moisture content.

The soils specifications were drawn up so that the modulus of deformation of the compacted backfill would approximate, as closely as possible, that of the natural soil in place. To accomplish this, the water content specified was 3 per cent dry of optimum and 100 per cent compaction.

PREVIOUS TESTING: None

SHOT:

Name:	"Priscilla"
Type:	Balloon
Yield:	36.6 KT
Height of Burst:	700 feet
Date:	24 June 1957

TEST LAYOUT: (See text pages 113, 114, 113)

LOADING:

	distance from GZ (feet)	peak surface overpressure (psi)
Near Location	750	320
Intermediate Location	1040	100
Far Location	1360	50

SUMMARY:
For a silty soil such as that found at Frenchman's Flat, there is considerable attenuation with depth of an air-induced ground-transmitted pressure. The amount of this attenuation is approximately 20 per cent at 5 feet, 40 per cent at 10 feet and 70 per cent at 20 feet. There is no large variation of this with surface peak overpressure in the range of from 50 to 250 psi.

When the compressibility of a structure is greater than that of the soil it replaces, the pressure on the structure is considerably less than that in the soil surrounding the structure. This decrease can amount to at least 50 per cent. Most of this decrease is developed in a depth of burial equal to one-half of the span of the structure.

On the basis of limited data, the pressure on vertical faces of flexible structures varies from 0.25 to 0.53 of the pressure on the horizontal faces.

It is recommended that, since the simple theory used gives reasonable results, further analytical studies be made to eliminate sc . of the approximations and extend the theory to include actual structural configurations.

SUBSEQUENT TESTING:
Operation Hardtack, Project 1.9 (WT 1614) (See text page 189)

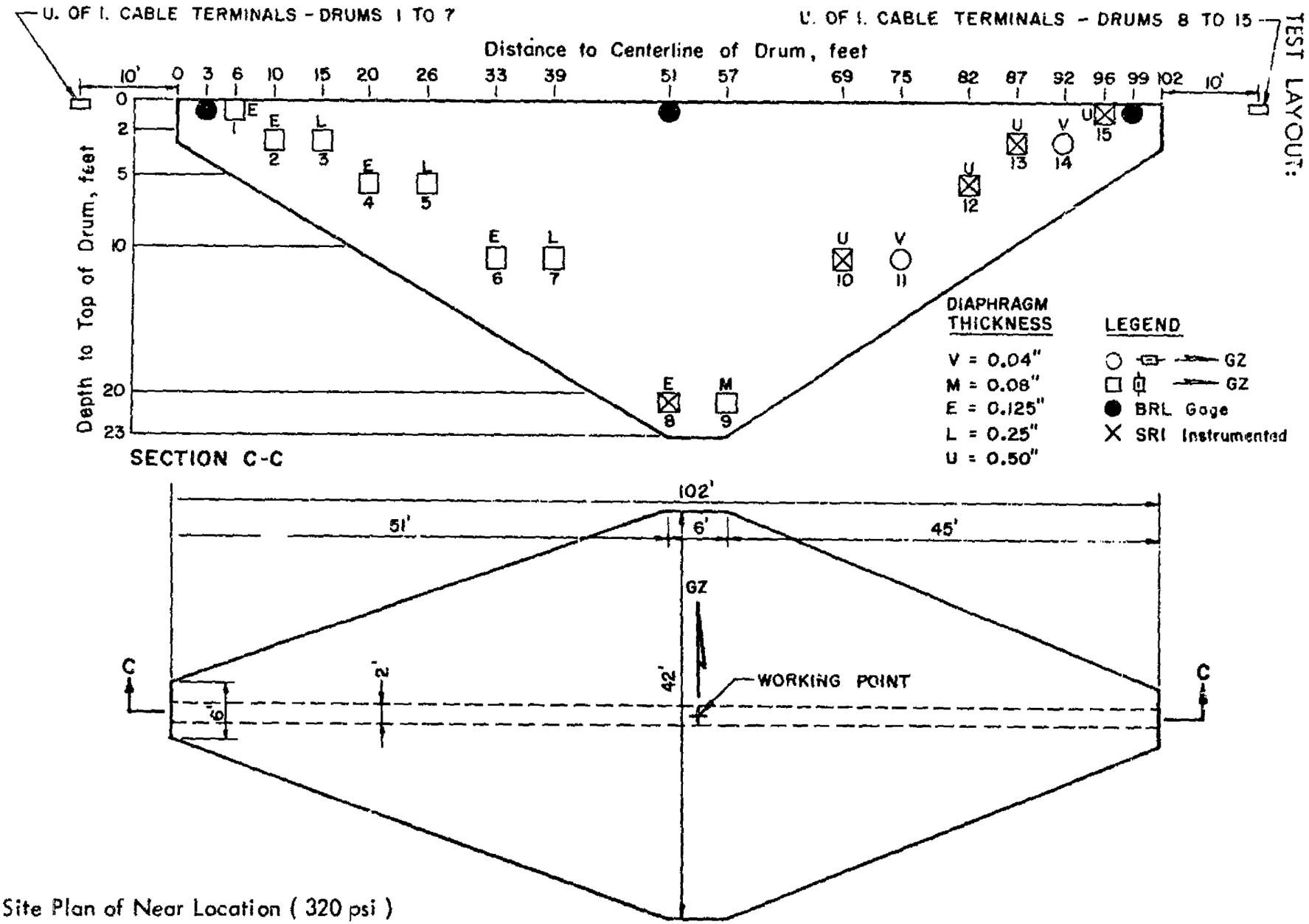

Site Plan of Near Location (320 psi)

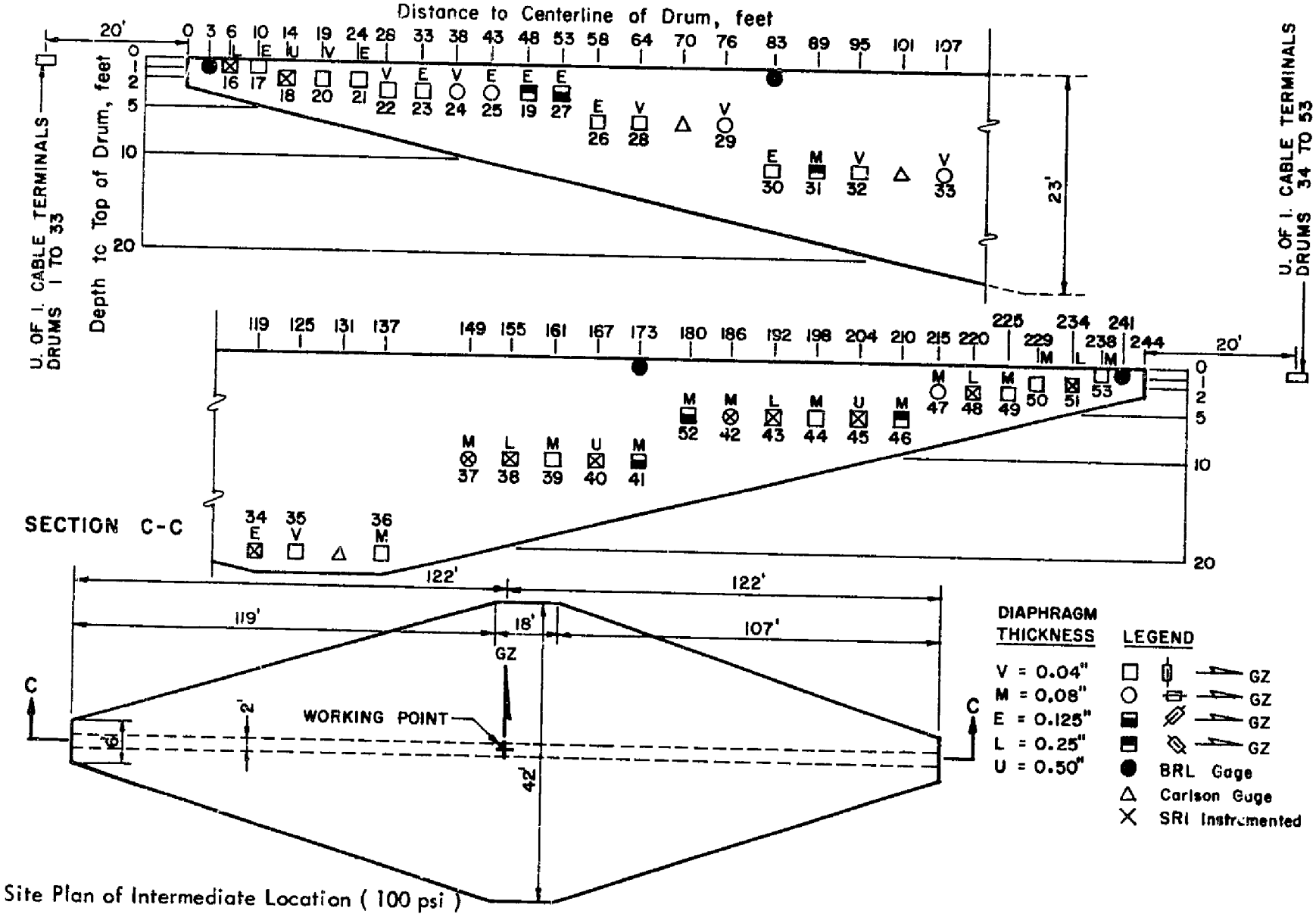

Site Plan of Intermediate Location (100 psi)

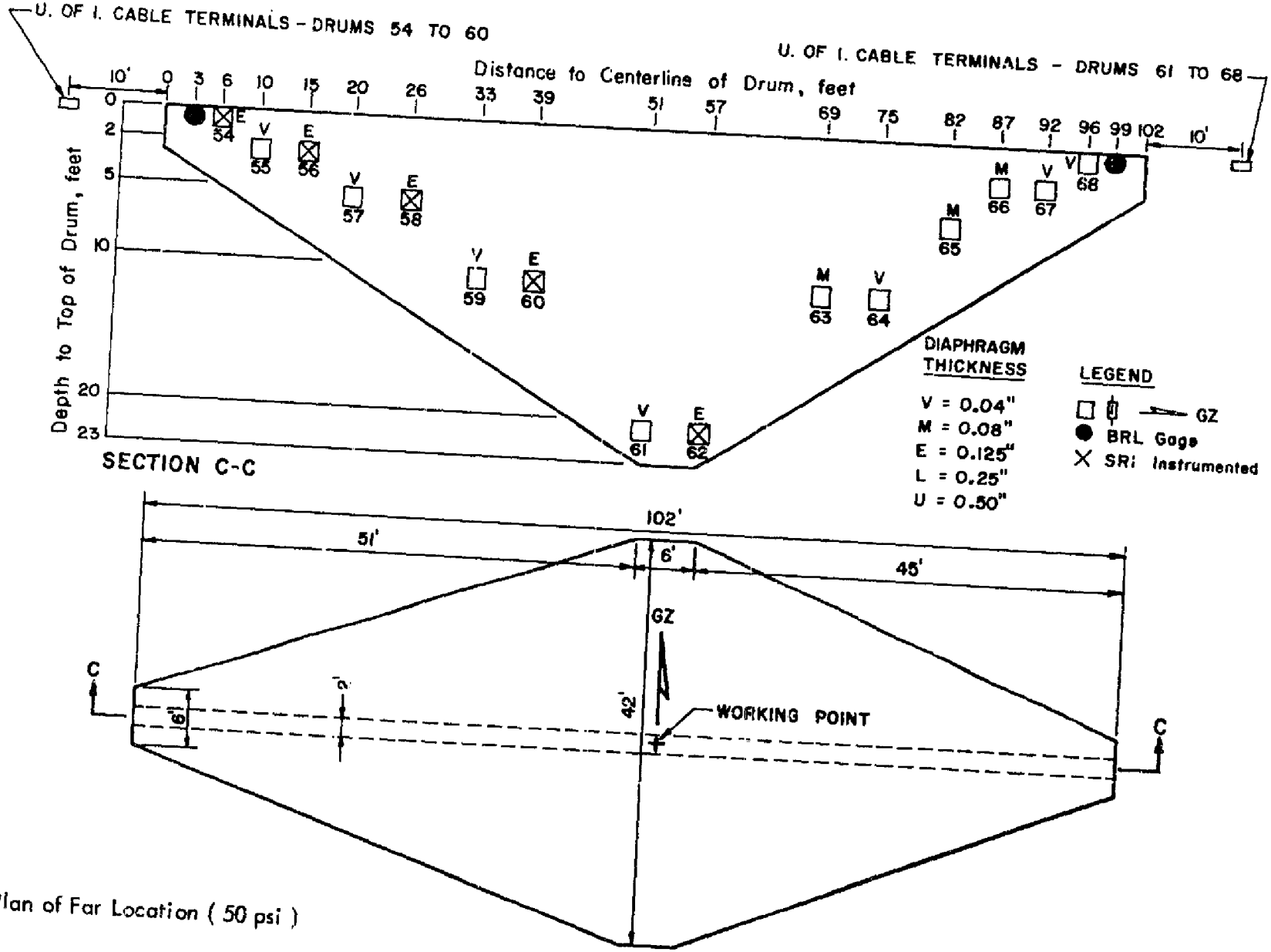

Site Plan of Far Location (50 psi)

OPERATION: Plumbbob

PROJECT: 3.1

STRUCTURE IDENTIFICATION: 3.1a, 3.1b, 3.1c, 3.1n

CROSS REFERENCE INDEX:
BURIED CONCRETE -- Reinforced Concrete Arch Structures

REPORT REFERENCES:
WT-1420
Defense Atomic Support Agency
Washington 25, D.C.

LOCATION: Frenchman's Flat
Nevada Test Site

OBJECTIVES:
To determine the suitability of underground concrete arches for use as protective shelters, as well as their resistance in the high overpressure ranges (50 to 200 psi) from a kiloton-range air burst.

Specifically to: (1) compare the response of four underground concrete-arch structures when subjected to controlled loading, ranging from design load through failure load; (2) determine the load distribution on a buried arch due to a nuclear blast; (3) gain a better understanding of the basic response of that portion of the arch element which is in no way affected by restraint or support from the end walls; (4) determine to what extent the end walls of an underground arch affect its response; (5) study the interaction of the soil and the structure in order to establish an idealized soil-structure system that can be adapted to analytical treatment; (6) determine the amount of protection from radiation provided by the structure; and (7) gain information of direct use in establishing design criteria for a prototype cast-in-place concrete personnel shelter.

STRUCTURAL DESCRIPTION:
Four reinforced concrete arch structures, all placed underground with the top of the crown 4 feet below the ground surface. The four arches were semicircular in cross section, with an inside radius of 8 feet and a thickness of 8 inches. Three of the

structures were 20 feet long, while the fourth was 32 feet long. The 32 foot long structure was included to assure an unrestrained section of arch essentially free of end-wall effects, so that it could be determined how far and to what extent end walls affect arch action.

STRUCTURAL DETAILS:

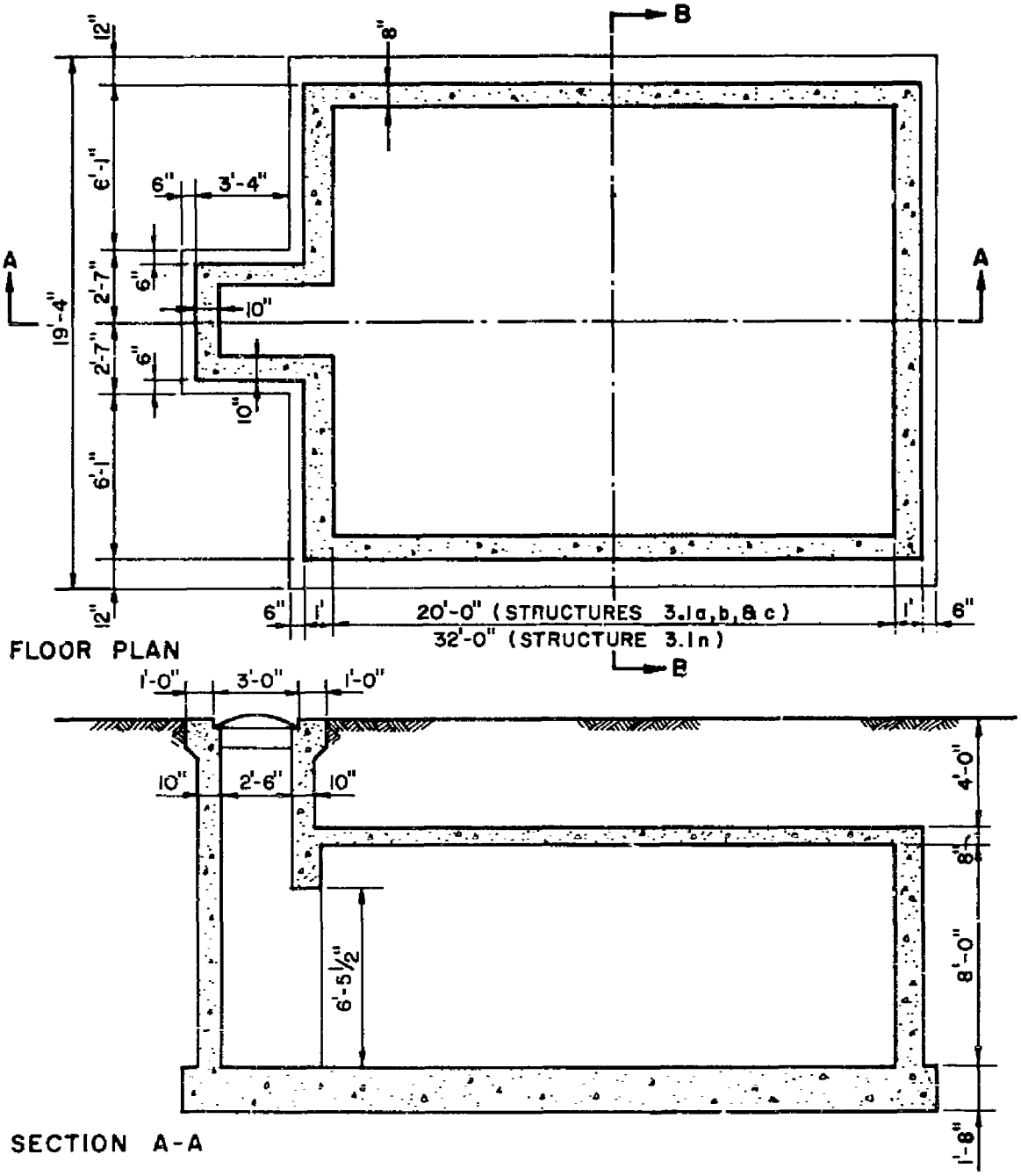

SECTION B-B

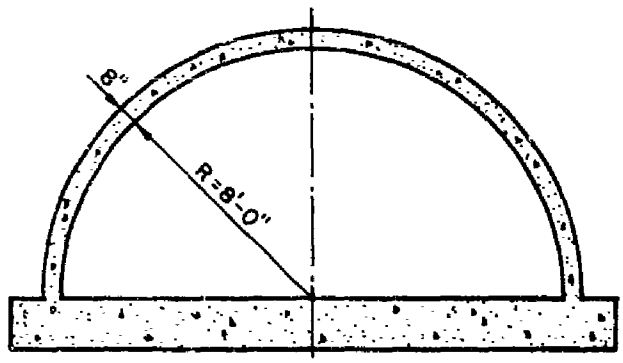

SOIL CHARACTERISTICS:
Clayey silt with uniform appearance and texture, with the following characteristics:

	average water content (pct)	average dry density (pcf)
Undisturbed Natural Soil	12.8	79.0
Recommended for Backfill	21.5	97.1
Control Tests during Backfill*	20.7	96.7
Preshot, 4 feet below Surface of Backfill	19.2	99.9
Postshot, 4 feet below Surface of Backfill	18.5	99.2

* Average of 40 samples per structure

PREVIOUS TESTING: None

SHOT:

Name:	"Priscilla"
Type:	Balloon
Yield:	36.6 KT
Height of Burst:	700 feet
Date:	24 June 1957

TEST LAYOUT: (See Page 11)

LOADING:. Peak Air Overpressure at Ground Surface

3.1c	199 psi
3.1b	124 psi
3.1n	56 psi

TEST LAYOUT:

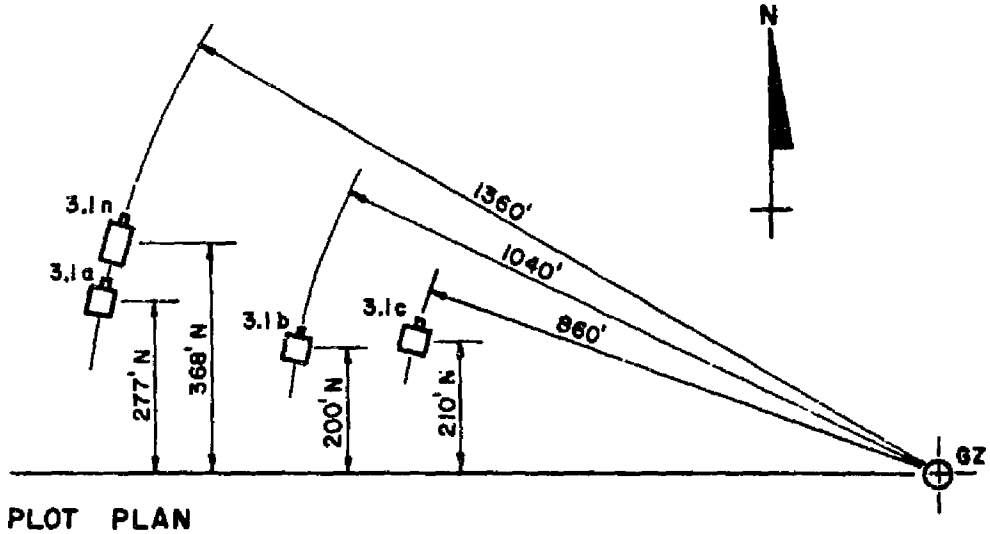

PLOT PLAN

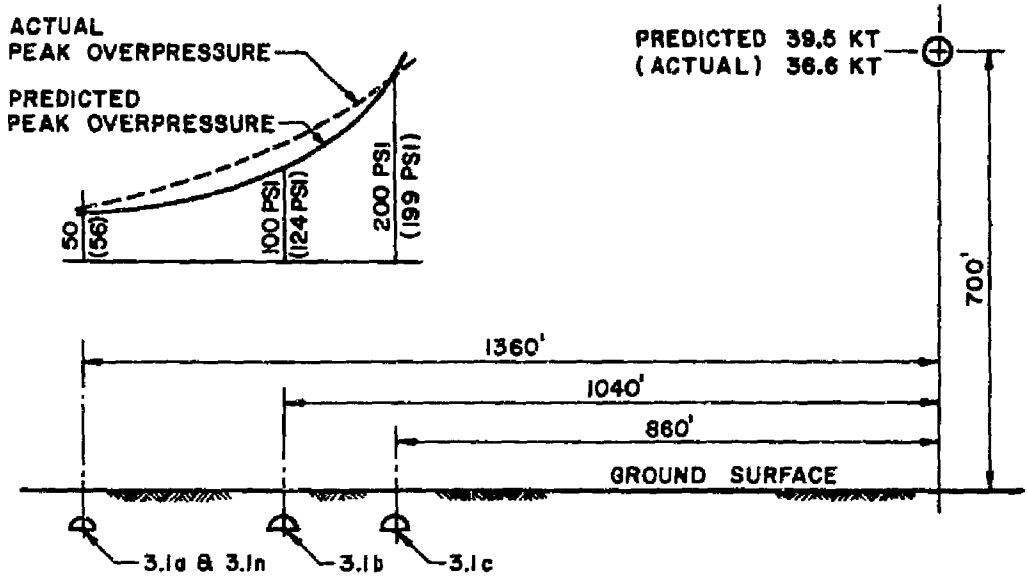

ELEVATION

SUMMARY:

The four structures suffered only minor damage, all remaining structurally serviceable. The structure at the 199 psi pressure level exhibited obvious cracking of the floor slab and minor tension cracking of the arch intrados. Conclusions reached include:

The 3.1-type structure proved to be an adequate shelter for resisting air overpressure of up to 200 psi; thereby showing that an underground reinforced-concrete arch is an excellent type structure for use in providing protection against nuclear-blast effects.

A reasonable design method for underground arches cannot be developed until more is known about the dynamic properties of soil-structure combinations. These structures were designed assuming uniform symmetrical loading. In this case it was observed that the earth pressure distribution around the relatively stiff arches was non-uniform and slightly asymmetric, thus causing the arch to undergo appreciable bending. The transient earth pressures exerted on structures of this type were greater at some points than the ground-surface air overpressure. This seems to be due to a combination of reflected and passive earth pressures.

The horizontal earth pressure resulting from ground-surface air overpressure is apparently greater than had been previously anticipated.

Displacements of the 3.1 structures as a whole, as well as the relative deflection of the crown, were minor, and directly proportional to the overpressure. During transient loading, a nearby test structure buried at the same depth, moved at approximately the same rate and magnitude as the free-field surrounding soil.

The end walls affect arch action for a distance of about 1 1/2 times the arch radius.

Strain gage measurement of the test structure at the 56 psi level yielded valuable information for determining moments and thrusts in the arch. Plane sections before loading remained plane during loading. The vertical reactions at the springing line were approximately equal to the ground-surface air overpressure times the horizontal projection of the arch structure. The largest moments and thrusts occurred near the springing line, and this would be the probable location of any failure.

OTHER REMARKS:
It should be noted that a better understanding of soil-structure interaction is needed not only for flexible metal structures, but also for the concrete arch structures described above. Conventional methods of analysis tend to be particularly conservative; hence, future efforts should be directed to loading response studies of this type when subjected to long duration overpressures.

SUBSEQUENT TESTING: None

OPERATION: Plumbbob

PROJECT: 3.2

STRUCTURE IDENTIFICATION:
3.2a, 3.2b, 3.2c, 3.2d, 3.2e, 3.2f, 3.2g, 3.2h, 3.2j, 3.2k, 3.2l, 3.2m

CROSS REFERENCE INDEX:
BURIED CONCRETE — Precast Concrete Pipe Sections (3.2e, 3.2j, 3.2l)
BURIED STEEL — Corrugated Steel Pipe Sections (3.2d, 3.2h)
(Cattlepass Sections — 3.2a, 3.2b, 3.2c, 3.2f, 3.2g, 3.2k, 3.2m)

REPORT REFERENCES:
WT-1421
Defense Atomic Support Agency
Washington 25, D.C.

LOCATION: Frenchman's Flat
Nevada Test Site

OBJECTIVES:
To obtain the necessary information from which to develop criteria for the economical and practical selection of standard, commercially available conduit sections for use as shelters to protect personnel from the effects of air blast and nuclear radiation was the general purpose of this project.

The specific objectives were: (1) to make an empirical determination of the degree of protection to personnel afforded by steel and concrete conduits at various depths of burial, when loaded in the high pressure region; (2) to assure that Department of Defense (DOD) Classes I and II protection (100 psi and 50 psi, respectively) are afforded by the use of buried conduits of various configurations.

STRUCTURAL DESCRIPTION:
Twelve commercial conduits were buried at depths varying from five feet to ten feet. Seven of the conduits were of the 10 gage corrugated steel cattlepass type; two

conduits were 10 gage, 8'-0" diameter circular corrugated steel. The remaining three conduits were 8'-0" diameter circular precast concrete pipe, 9" wall thickness, reinforced only circumferentially with 2 lines totaling 0.57 square inches per linear foot.

STRUCTURAL DETAILS:

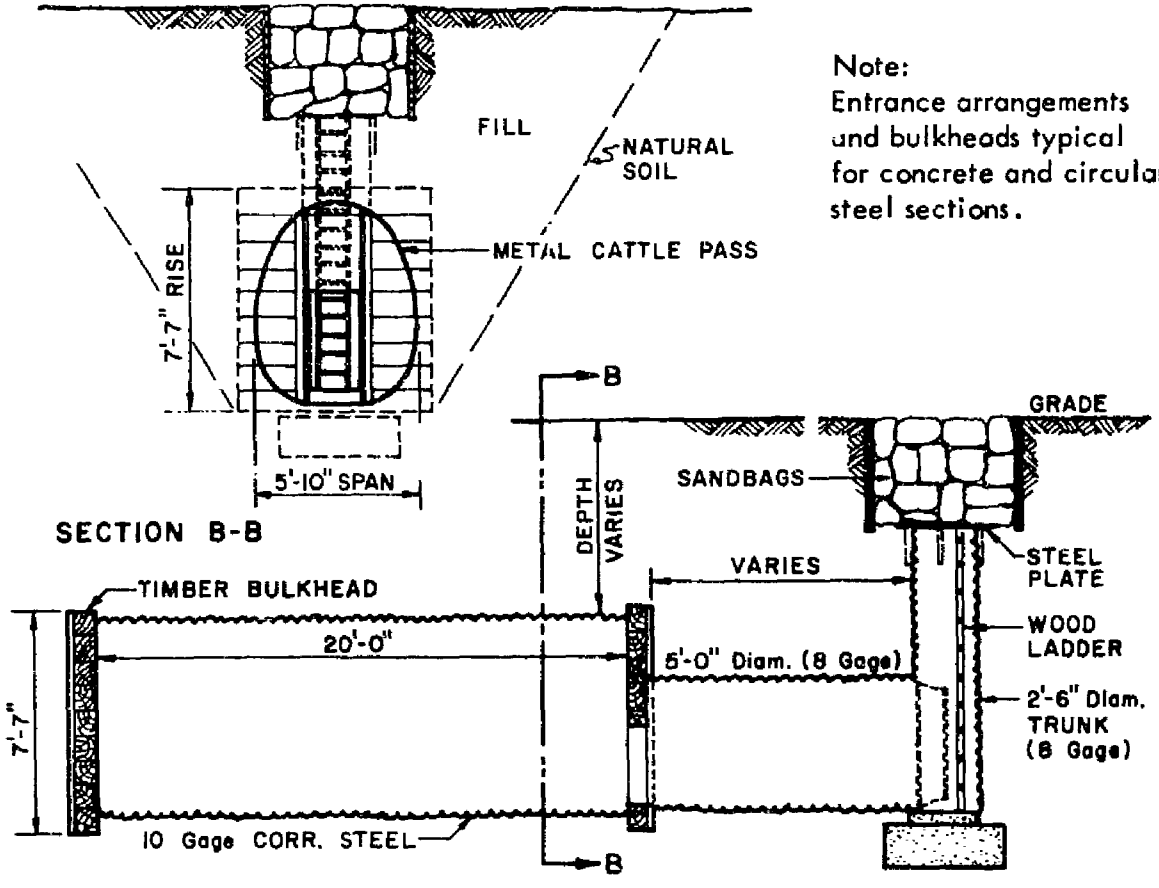

Note:
Entrance arrangements and bulkheads typical for concrete and circular steel sections.

CATTLE-PASS TEST SECTION AND ACCESS PASSAGE

SOIL CHARACTERISTICS:
Backfill consisted of a gravelly, silty, sandy soil with a dry density of approximately 117 pcf. The average water content was 8.1 percent, and the angle of internal friction was approximately 36 degrees. The average cohesion was 6.1 psi.

PREVIOUS TESTING: None
However, buried structures of this type were tested as "open structures" as follows:
Operation Buster-Jangle, Structure 9.1a
Operation Buster-Jangle, Structure 9.1b

SHOT: (See Page 125)

TEST LAYOUT: (See Page 125)

LOADING: Structural Measurements

Conduit	3.2a	3.2b	3.2c	3.2d	3.2e
Station Number	9016.01	9016.04	9016.03	9018.01	9017.01
Type	Steel cattle-pass	Steel cattle-pass	Steel cattle-pass	Steel circular	Concrete circular
Nominal Depth of Earth Cover (feet)	7.5	10.0	7.5	7.5	7.5
Peak Overpressure at Earth Surface (psi)	149	126	126	126	126
Positive Duration of Pressure Pulse (sec)	0.232	0.206	0.206	---	---
Peak Internal Pressure (psi)	3.7	*	2.0	3.0	3.0
Peak Downward Acceleration of Bottom of Conduit (g)	8.0	<5	<5	*	<5
Maximum Vertical Deflection from Scratch Gages (in)	-16/16**	-17/16	-14/16**	-12/16**	-10/16
Residual Vertical Deflection from Scratch Gages (in)	-8/16	-9/16	-4/16	-8/16	-5/16
Gross Movement of Conduit Bottom Relative to Reference Point from D+9 Days Survey (in)	-5/8	+7/8	-1 1/2	-5/8	-1 1/2

* Gage failed to record
** Incomplete record

3.2f	3.2g	3.2h	3.2j	3.2k	3.2l	3.2m
9016.02	9016.05	9018.02	9017.02	9016.07	9017.03	9016.06
Steel cattle-pass	Steel cattle-pass	Steel circular	Concrete circular	Steel cattle-pass	Concrete circular	Steel cattle-pass
5.0	7.5	7.5	7.5	7.5	7.5	5.0
126	100	100	100	60	60	60
---	0.333	0.333	---	---	0.361	---
3.0	2.0	1.3	3.0	1.0	1.5	1.7
5.0	5.0	<5	<5	<10	<10	<5
-16/16	-10/16	-14/16	-5/16	-6/16	-5/16	-4/16
-8/16	-3/16	-8/16	-2/16	+1/16	-1/16	+1/16
+1/8	-3/4	0	-1 1/4	-1	-1 5/8	-1 1/4

SHOT:

Name:	"Priscilla"
Type:	Balloon
Yield:	36.6 KT
Height of Burst:	700 feet
Date:	24 June 1957

TEST LAYOUT:

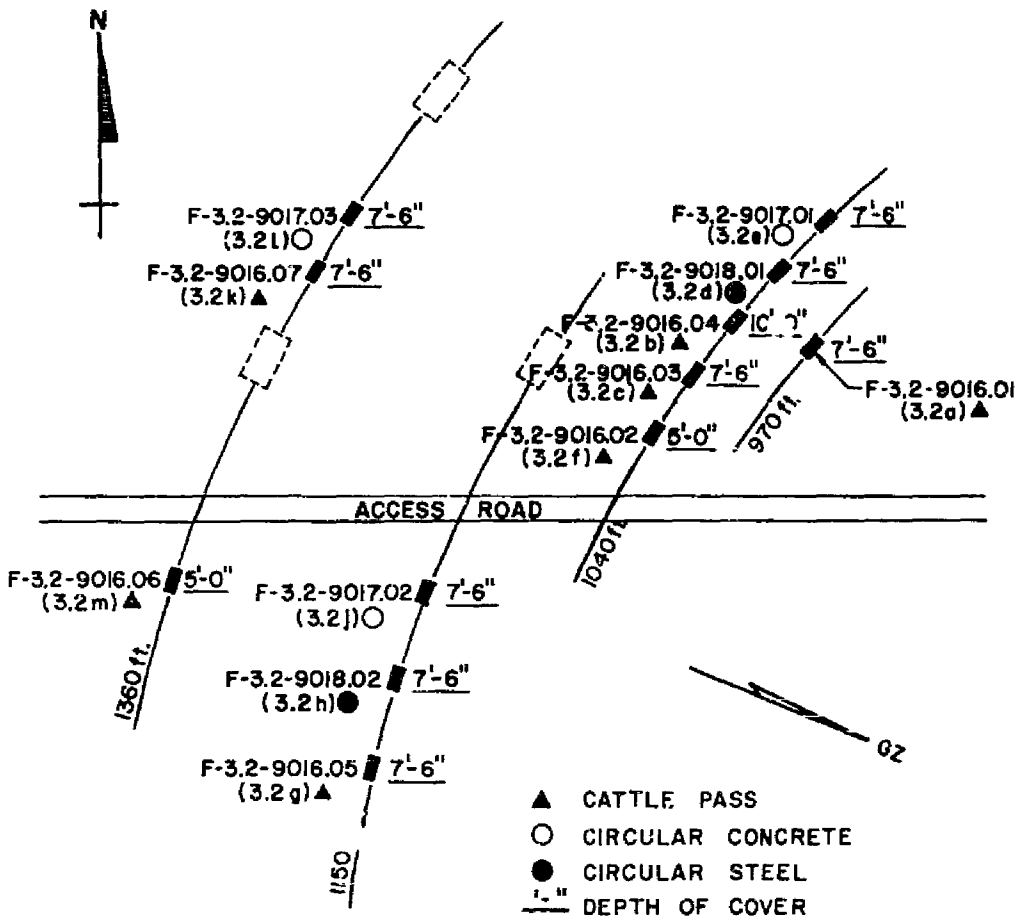

SUMMARY:
Based on the preliminary data available, the report concludes that all types of conduit sections tested provided adequate 100 psi protection. The structures were instrumented with scratch deflection gages, self recording pressure versus time gages, peak pressure gages, dynamic accelerometers, and peak accelerometers. Structural deflections were minor.

In addition, for the particular conditions of this test and within the accuracy of the overpressure measurements, it was observed that all conduits tested provided adequate protection against nuclear radiation. Present knowledge does not justify making more general conclusions.

OTHER REMARKS:
Structures of this type could probably withstand considerably greater overpressures under certain soil conditions and backfill techniques. The observations of this project are particularly limited until an appropriate theory can be developed for the response of flexible conduit-soil interaction conditions.

SUBSEQUENT TESTING: None

OPERATION: Plumbbob

PROJECT: 3.3

STRUCTURE IDENTIFICATION: 3.3a, 3.3b, 3.3c

CROSS REFERENCE INDEX:
BURIED STEEL — Corrugated Steel Arch Shelters

REPORT REFERENCES:
WT-1422
Defense Atomic Support Agency
Washington 25, D.C.

LOCATION: Frenchman's Flat
Nevada Test Site

OBJECTIVES:
To determine protection from blast and radiation afforded by earth-covered, prefabricated ammunition storage magazines used as personnel shelters.

STRUCTURAL DESCRIPTION:
Three earth-covered, prefabricated ammunition storage magazines were tested. All three structures basically consisted of Navy stock, 25 feet by 48 feet ammunition storage magazines (10 gage Armco multiplate). Two structures, 3.3a and 3.3c contained 6" steel strengthening ribs.

STRUCTURAL DETAILS: (See Pages 128 and 129)

SOIL CHARACTERISTICS:
Backfill existed of a gravelly, silty, sandy soil with a dry density of approximately 115 pcf. The average water content was 8.1 percent; and the angle of internal friction was 45 degrees. The average cohesion was 1.4 psi.

PREVIOUS TESTING:
Similar structures with different earth configurations were tested in Operation Upshot-Knothole as Structure 3.15 and Operation Teapot as Structure 3.6. (See text pages 70 and 95)

STRUCTURAL DETAILS:

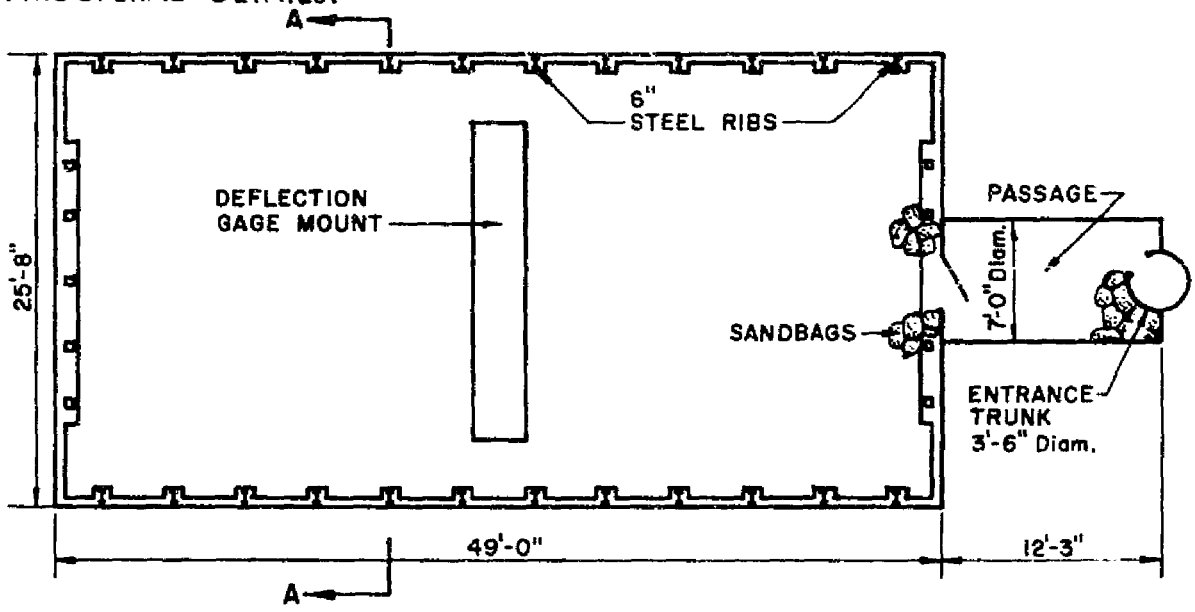

PLAN OF STRUCTURE 3.3a

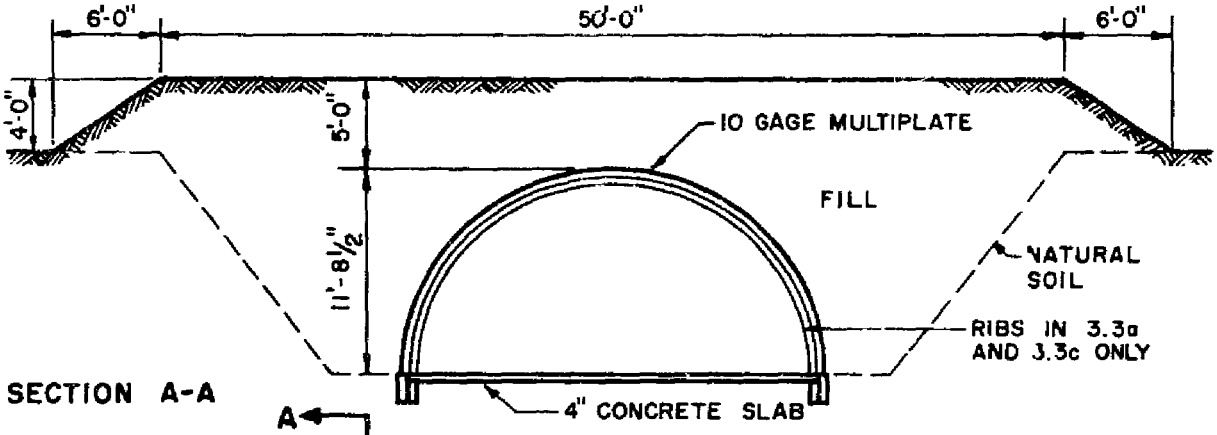

SECTION A-A

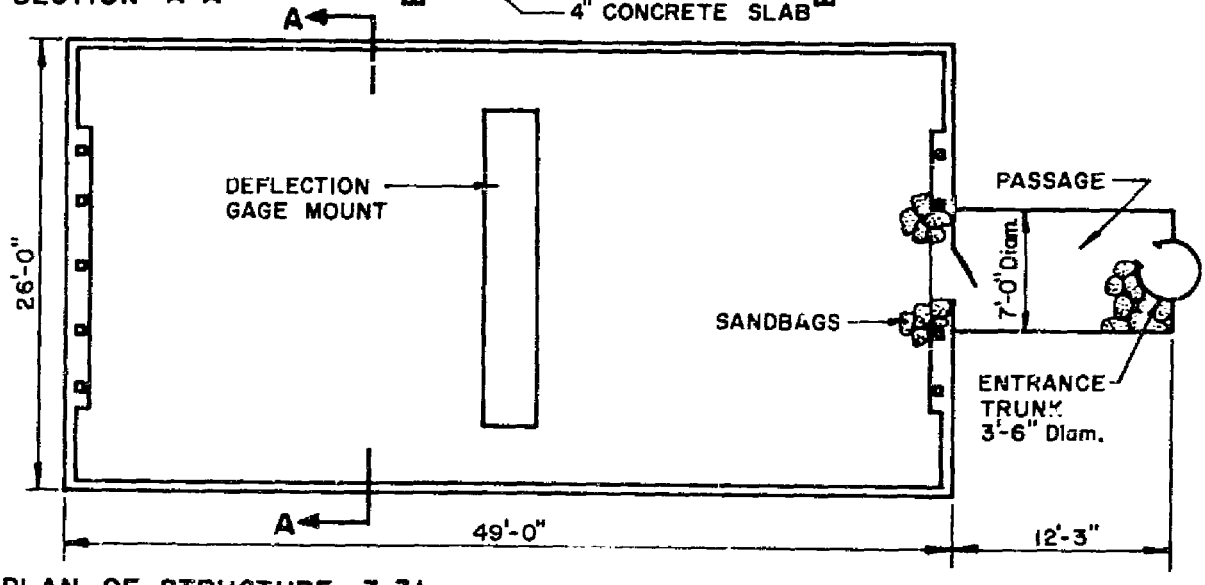

PLAN OF STRUCTURE 3.3b

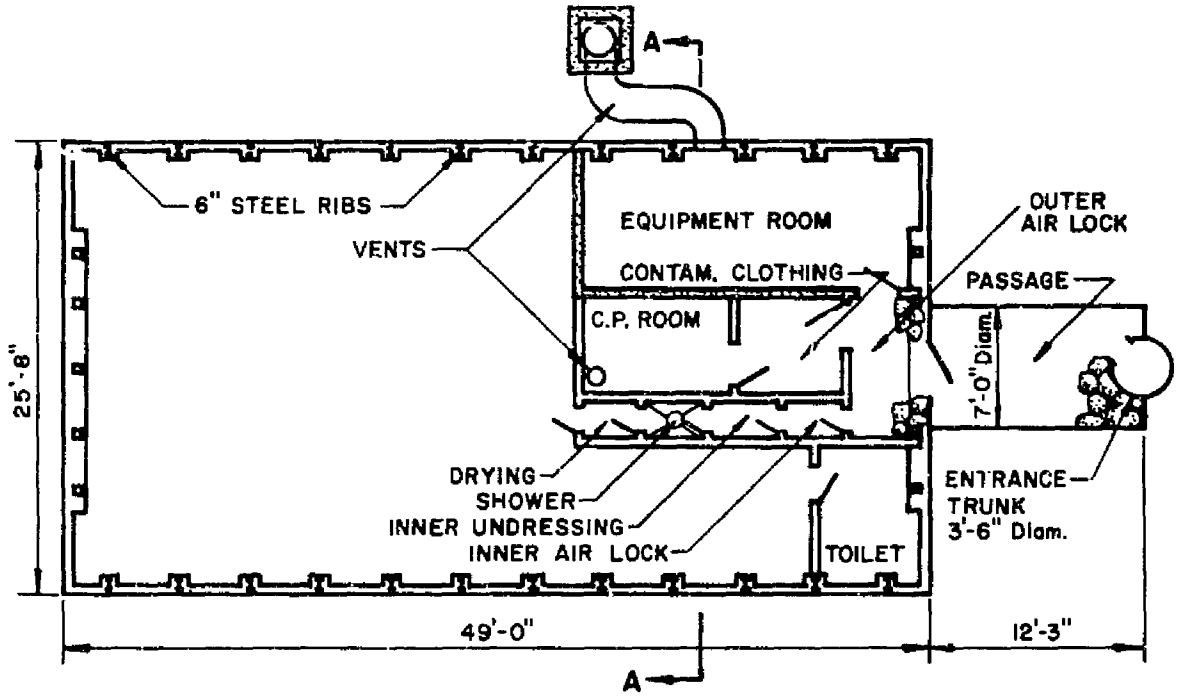

PLAN OF STRUCTURE 3.3c

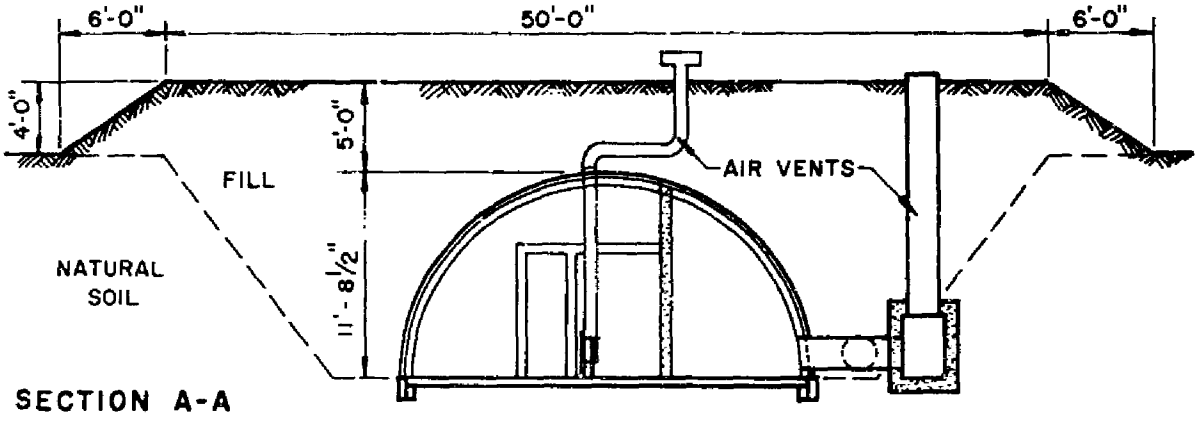

SECTION A-A

SHOT:

Name:	"Priscilla"
Type:	Balloon
Yield:	36.6 KT
Height of Burst:	700 feet
Date:	21 June 1957

TEST LAYOUT:

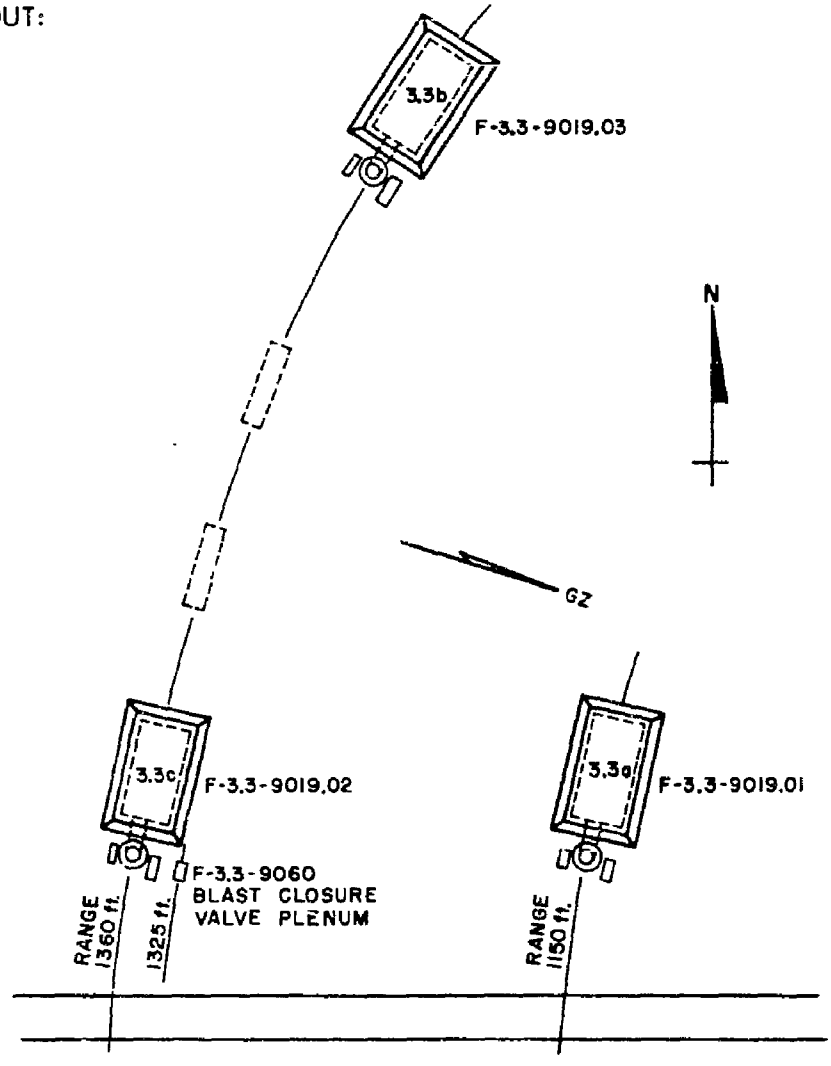

LOADING:

structure	3.3a	3.3c	3.3b
Type of structure	Ribbed	Ribbed	Not ribbed
Nominal depth of earth cover (feet)	5	5	5
Peak Overpressure at earth surface (psi)	100	60	60
Positive duration of pressure pulse (msec)	333	---	361
Dynamic pressure (psi)*	310	200	200
Peak internal pressure (psi)	2.7	0	1.0
Peak vertical acceleration of floor (g)	<3	<3	<3

* From preliminary composite dynamic pressure curve for height of 3 feet

SUMMARY:
Preliminary data indicates that the structural systems tested provided adequate 50 psi protection. All structures provided adequate total protection against the initial gamma and neutron radiation from a 39.0 KT relatively high neutron flux device. Instrumentation consisted of scratch type deflection gages, self-recording pressure versus time gages, peak-pressure gages, dynamic accelerometers, and peak accelerometers. Radiation instrumentation consisted of gamma film packets, chemical dosimeters, and neutron threshold devices.

The unreinforced 4" concrete floor slab of structure 3.3a exhibited minor cracking as shown in the following plan. The footings were not integral with the slab and deflected downward. Cracks appear to be due to frictional drag of the moving footings.

CRACK PATTERN OF FLOOR - STRUCTURE 3.3a

In addition, for the particular conditions of this test and within the accuracy of the overpressure measurements, it was observed that:

(1) The steel arch structure without arch ribs withstood a peak overpressure of 56 psi with no significant structural damage.

(2) The steel arch structure with arch ribs withstood a peak overpressure of 100 psi with minor joint slippage and floor cracking.

(3) All three structures tested provided adequate protection against nuclear radiation.

SUBSEQUENT TESTING: None
Structures of a similar type were tested in Operation Hardtack, Project 3.2 (WT-1626). (See text page 189)

OPERATION: Plumbbob

PROJECT: 3.4

STRUCTURE IDENTIFICATION: 3.4a, 3.4b, 3.4c

CROSS REFERENCE INDEX:
LOADING-RESPONSE EXPERIMENTAL SYSTEMS — Buried Steel Beam Response Elements

REPORT REFERENCES:
WT-1423
Defense Atomic Support Agency
Washington 25, D.C.

LOCATION: Frenchman's Flat
Nevada Test Site

OBJECTIVES:
To determine the blast response of underground beams in order to supplement the findings of the original tests (Operation Upshot-Knothole, Project 3.8 and Operation Teapot, Project 3.4) with respect to effective vertical earth pressures and their attenuation with depth.

STRUCTURAL DESCRIPTION:
Three structures, 3.4a, 3.4b, 3.4c consisted of concrete boxes with 8 foot long simply supported steel beam strips as roofs. The beam strips for each of the structures included members of each of three different degrees of flexibility; earth cover was 1 foot, 4 feet, and 8 feet respectively. Three of the plastic or "P Beams" in each of the structures were altered from those tested in Operation Upshot-Knothole as shown in Structural Details.

STRUCTURAL DETAILS: (See Page 133)

SOIL CHARACTERISTICS:
Tan silt with a trace of clay. In its natural state the soil is very friable. It is horizontally stratified, has vertical joints which are local zones of weakness, and contains many

voids. Limited tests of the undisturbed soil in this area prior to the Upshot-Knothole tests gave values of 86.6 pcf for the dry density, 10.6 percent for the water content, and 95.5 pcf for the wet density. The unconfined compressive strength determined on three samples gave results of 1.1, 2.1, and 4.3 tons per square foot.

No additional soil data was obtained during Operation Plumbbob.

STRUCTURAL DETAILS:

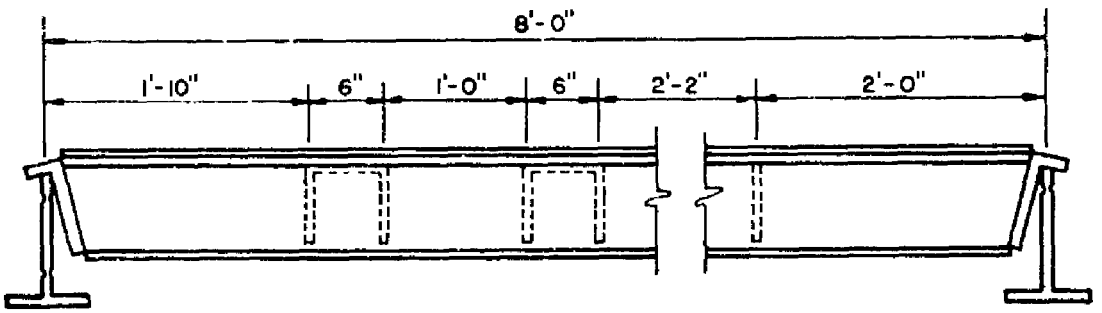

TYPICAL ELEVATION

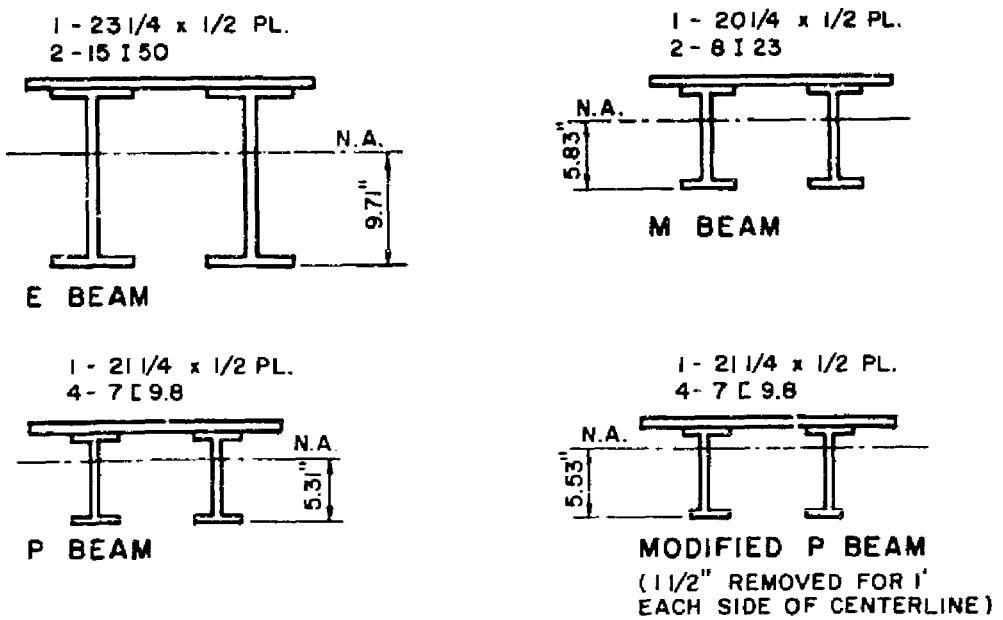

SECTIONS

PREVIOUS TESTING:

Operation Upshot-Knothole, Project 3.8 (WT-727) (See text page 63)
Operation Teapot, Project 3.4 (WT-1127) (See text page 91)

SHOT:

Name:	"Priscilla"
Type:	Balloon
Yield:	36.6 KT
Height of Burst:	700 feet
Date:	24 June 1957

TEST LAYOUT:

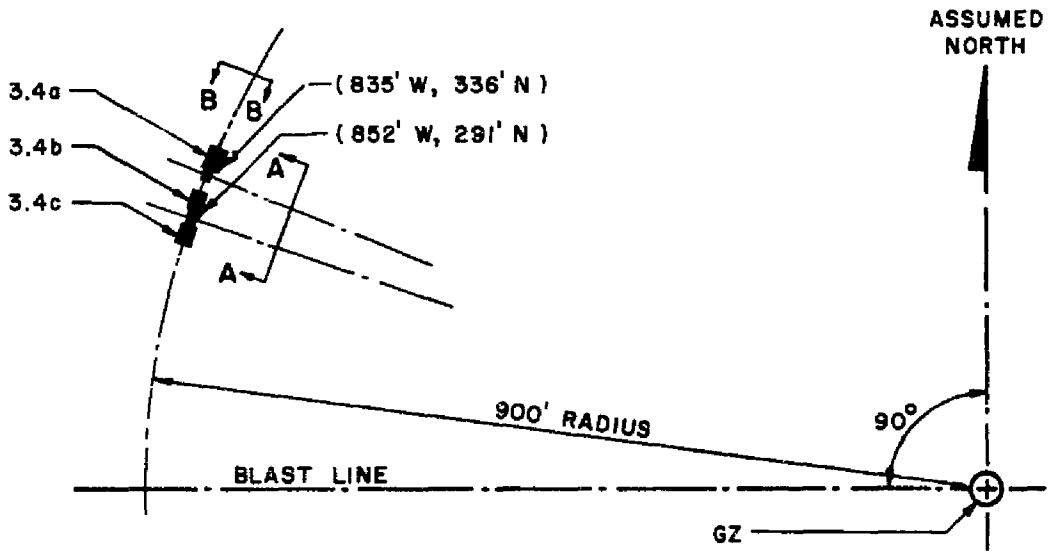

SITE PLAN

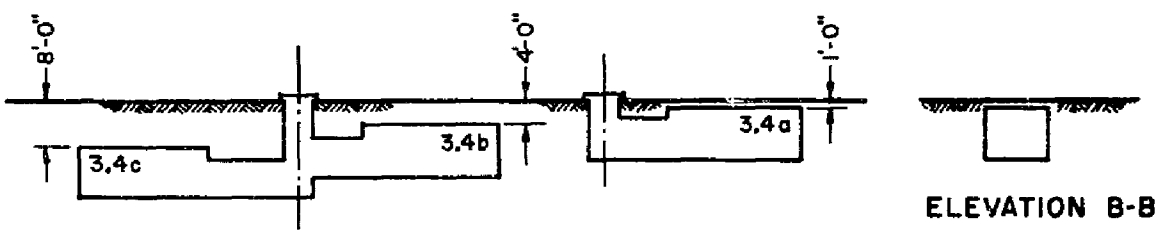

ELEVATION A-A

ELEVATION B-B

LOADING:

Shot 5:

Precursor:	Rise Time — essentially zero Overpressure — 25 psi Duration — 55 msec
Main Pulse:	Rise Time — 45 msec Peak Overpressure — 160 psi Duration — 180 msec

SUMMARY:
The results of this test were made available to personnel engaged in the two previous tests. It was the concensus of opinion that, while the data could well serve to further the findings of the earlier tests, this would require extended analysis. Such an effort could not be undertaken within the scope of the present program; therefore, no quantitative interpretation of results is offered. Certain qualitative observations, however, were clear.

On the basis of the measured beam response there seemed to be no doubt that in the type of soil encountered, there was a significant attenuation of effective vertical earth pressures within the first few feet of depth. (Effective vertical earth pressure refers to the damage producing agent, not to the free-field pressure; in other words, the test results show a significant damage attenuation with depth.) The opposite conclusion was reached in the original Upshot-Knothole 3.8 test and was apparently reaffirmed in the Teapot 3.4 test.

Another conclusion reached in earlier tests was that the beams behaved as though loaded with the vertical forces acting on the earth's surface immediately overhead. In view of the significant variation in response of presumably identical beams in the same structure, it does not seem reasonable to assign only a passive role to the soil in regard to the transmission of vertical pressure.

It is believed that the Plumbbob test was extremely worthwhile and that the data gathered represented a significant addition to the limited empirical information relating to the blast response of underground structures.

OTHER REMARKS:
The conclusions reached in earlier tests relating to the lack of attenuation with depth of effective vertical earth pressures and the response of the test beams to these loads need to be re-evaluated in light of the Plumbbob test data.

SUBSEQUENT TESTING: None

OPERATION: Plumbbob

PROJECT: 3.5

STRUCTURE IDENTIFICATION: 3.5

CROSS REFERENCE INDEX:
LOADING-RESPONSE EXPERIMENTAL SYSTEMS — Buried Isolated Response Cylinders

REPORT REFERENCES:
WT-1424
Defense Atomic Support Agency
Washington 25, D.C.

LOCATION: Frenchman's Flat
Nevada Test Site

OBJECTIVES:
The overall objective was to make an initial study of the benefit derived from special backfills in isolating or protecting underground structures and their contents from the physical effects of explosions. The immediate objective was to test the value of two specific forms of special backfill — namely, frangible elements and shear barriers.

STRUCTURE DESCRIPTION:
For this experiment, two test structures and one comparison structure were used. Each test structure consisted of a reinforced concrete pipe enclosing a steel cylinder separated from the pipe by rubber "O" rings. Outside the concrete pipe was a special frangible backfill (glass bottles) around the sides and bottom. The comparison structure consisted only of a concrete pipe with a solid concrete bottom. All three structures were placed below ground with their axes vertical and their tops approximately 2 feet below ground level, and with a concrete slab 1 foot thick and 15 feet wide above each. One test structure and the comparison structure were placed 750 feet from ground zero (300 psi predicted peak overpressure; 229 psi actual). The remaining test structure was placed 1,050 feet from ground zero (100 psi predicted peak overpressure; 104 psi actual).

STRUCTURAL DETAILS:

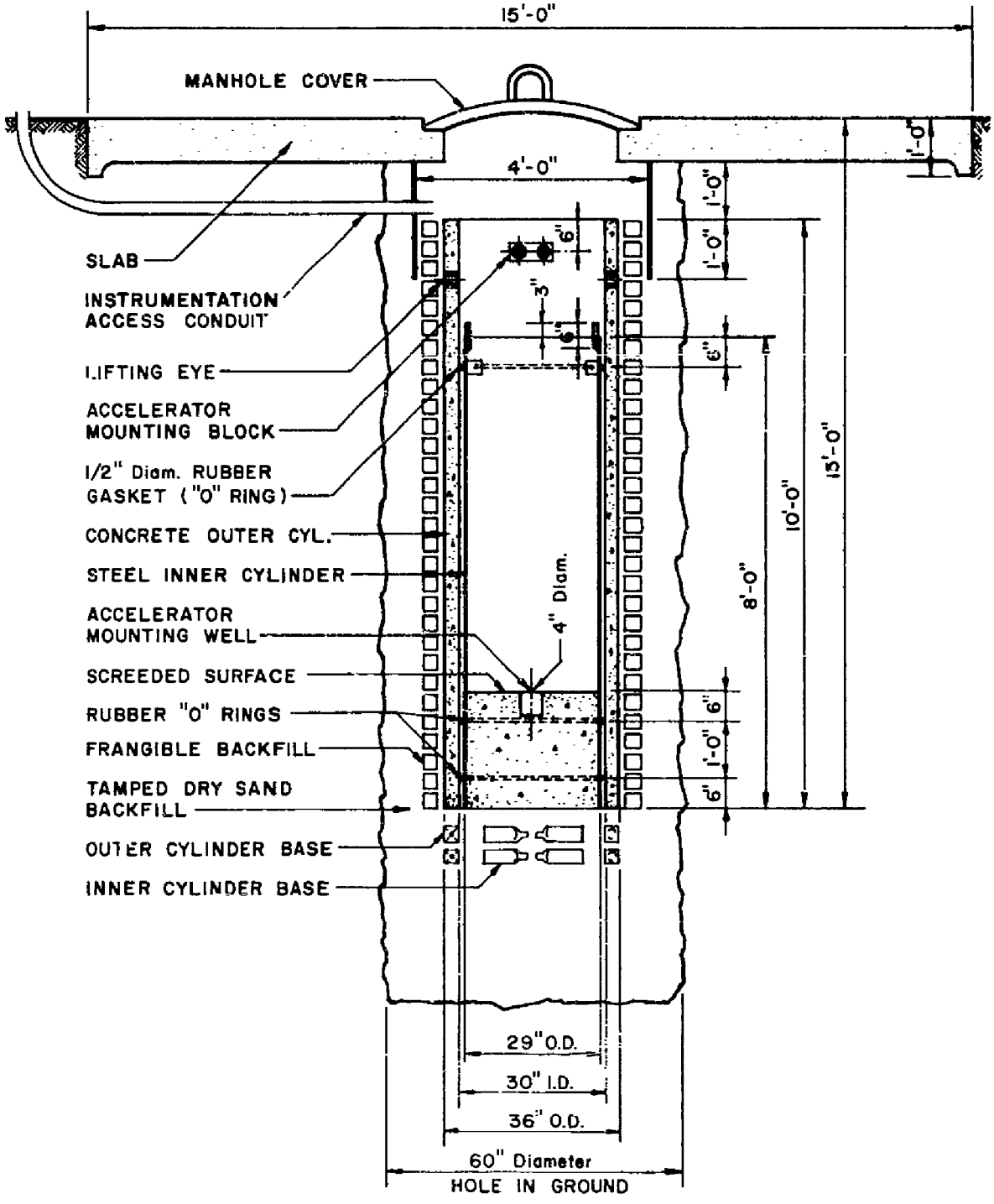

SOIL AND SPECIAL BACKFILL CHARACTERISTICS:
The excavation for these structures was accomplished by power augering. For each structure a hole was augered 5 1/2 feet in diameter and 15 feet deep. The backfill of dry sand was compacted by eccentric vibrators commonly used in the placement of concrete.

It was considered desirable that the frangible backfill should: (1) have a small elastic compressive change of volume under the static foundation loads; (2) be impervious to water; and (3) fail and form voids under the influence of stresses produced by explosions.

Consideration of various possibilities led to the conclusion that glass bottles were attractive from the standpoint of stiffness, water imperviousness, and good aging characteristics. It is further concluded that square shapes, with their better characteristics of frangibility would be more satisfactory than round ones. Specifically, it was recognized that the collapse under external pressure of square shapes was likely to be both more uniform and at a lower value of pressure than that of round shapes.

It was desired that the frangible elements withstand, without failure, pressures of the order of 20 psi. It was desirable to find frangible elements that definitely would fail at pressures little above the value of 20 psi, since the project would fail to obtain data if the frangible backfill were not broken by the explosion forces.

Laboratory experiments on a wide range of sizes and shapes of glass bottles disclosed that square gin bottles most closely titted the desired specifications. Quart gin bottles were found to fail under external pressures ranging from 30 to 50 psi, with the major fraction failing between 25 and 45 psi. The next strongest alternatives tested were square milk bottles, which failed at pressures of approximately 65 psi. All bottles of smaller size withstood 100 psi successfully.

To avoid complete collapse, the bottles were placed around the side of the structure so that they covered about 53 percent of the area. Thus, there remained about 47 percent of the area in which the sand backfill was initially in contact with the structure. Since it was expected that the earth (motion) stresses and strains would be first a vertical compression and then a radial compression, it was decided that the bottles should be placed with their axes horizontal rather than vertical. With this orientation, the frangible backfill would be expected to collapse at an earlier time and under a lower total stress than with any other orientation.

The design of the frangible backfill below the bottom of the concrete pipe and of the inner cylinder required a quite different approach, because the applied forces were expected to be of an entirely different character. It was estimated that the vertical motion of the soil at the 12 foot depth, where the bottoms of the structures were, would be a nearly instantaneous downward displacement of between 1 and 6 inches. If either, or both, the frangible backfill outside the concrete pipe and the rubber rollers between the inner cylinder and the concrete pipe served as satisfactory shear barriers, it was expected that the structures would remain essentially stationary during this downward displacement of the soil. Hence, the problem of designing the frangible backfill

underneath the structures was primarily the problem of minimizing the upward acceleration required to reduce their velocity to zero at the time they returned to contact with the soil that had dropped out from under them.

Just as in the case of the frangible backfill at the sides, complete collapse of the bottom backfill was not desirable. For both the inner cylinder and the outer concrete pipe, the the static vertical load was carried by the square bottles. To avoid the catastrophic collapse when the bottles broke, styrofoam columns were placed between the bottles. Preliminary tests showed that tapered columns (wedges) were superior to straight-sided ones; hence, tapered styrofoam columns were placed between the bottles under the inner cylinder. The weight of the outer cylinder (4,800 pounds) required eight bottles for support under static conditions, and the remaining space was sufficient only for straight-sided styrofoam columns.

PREVIOUS TESTING: None

SHOT:

Name:	"Priscilla"
Type:	Balloon
Yield:	36.6 KT
Height of Burst:	700 feet
Date:	24 June 1957

TEST LAYOUT:

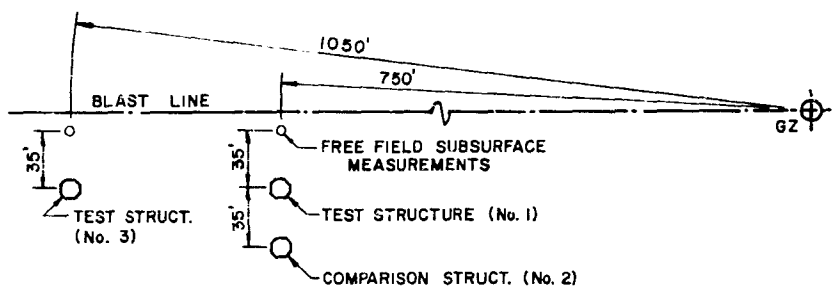

LOADING:
(Peak surface air overpressure)

750 foot range:	229 psi
1050 foot range:	104 psi

SUMMARY:
The conclusions derived from this experiment is that special backfills designed to reduce the coupling between underground structures and the surrounding soil have significant promise.

The following specific conclusions are drawn:

(1) The peak downward acceleration of the outer part of Structure No. 1 (test) was 26 percent of the corresponding free-field value at a 10 foot depth. This is the best evidence of the value of the frangible elements and sand.

(2) The peak downward acceleration of the inner part of Structure No. 1 (test) was 21 percent of that of the outer cylinder. This is the best evidence of the value of the rubber "O" rings as shear barriers. It suggests promise of lubricant-type shear barriers.

(3) The horizontal motion of the inner part of Structure No. 1 (test) was significantly less than that of the free field at 10 foot depth or of Structure No. 2 (comparison). Since both the frangible backfill and the "O" rings acted as compression barriers to horizontal motion, it is not possible to conclude which type of isolation gave the most benefit. The motions were small, and it may well be that the resiliency of the "O" rings was a major factor.

(4) The horizontal motion of Structure No. 2 (comparison) was approximately the same as that of the free field at a 10 foot depth.

(5) The peak downward acceleration of the outer part of Structure No. 3 (test) was less than 50 percent of the corresponding value at a 10 foot depth. This describes the value of the frangible elements and sand for this structure.

(6) The horizontal motion of the inner part of Structure No. 3 (test) showed important departures from the motion of the free field 10 foot depth. These differences were believed to be due primarily to the effect of the "O" rings; but the effect of the frangible elements and sand were also included, and the two cannot be separated.

(7) The benefits of this specific arrangement of frangible backfill and sand were significant at the 104 psi overpressure level, and were more impressive at the 229 psi level.

SUBSEQUENT TESTING: None

OPERATION: Plumbbob

PROJECT: 30.2

STRUCTURE IDENTIFICATION: 30.2

CROSS REFERENCE INDEX:
BURIED CONCRETE — Reinforced Concrete Parking Garage-Shelter

REPORT REFERENCES:
ITR-1449
Civil Effects Test Group Report
Available through Office of Technical Services
Department of Commerce
Washington 25, D.C.

LOCATION: Frenchman's Flat
Nevada Test Site

OBJECTIVES:
To evaluate the capabilities of a reinforced concrete dual purpose underground parking garage and personnel shelter in providing protection against the effects of a nuclear weapon.

STRUCTURAL DESCRIPTION:
The test section was a below grade flat slab structure with an interior floor area of 7569 square feet (87 feet by 87 feet) and nine interior columns 29 feet on center. Access was provided by a 14 foot wide vehicular ramp along one side of the structure. The roof slab was 3 feet below grade and the walls of the structure were 12 inches thick, except for the exposed wall along the ramp which was 4 feet 6 inches thick.

STRUCTURAL DETAILS: (See Page 142)

SOIL CHARACTERISTICS:
The soil possessed a state of high consolidation and a natural prestress of 10 tsf. A perculiar characteristic of the soil was high triaxial stresses and small strains at failure as evidenced by laboratory tests.

PREVIOUS TESTING: None

STRUCTURAL DETAILS:

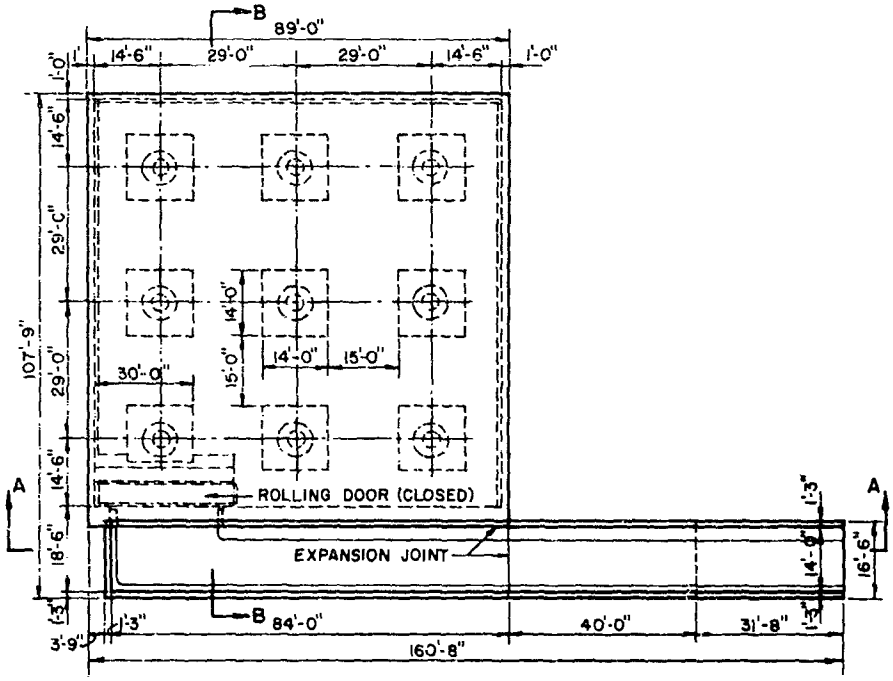

ROOF PLAN

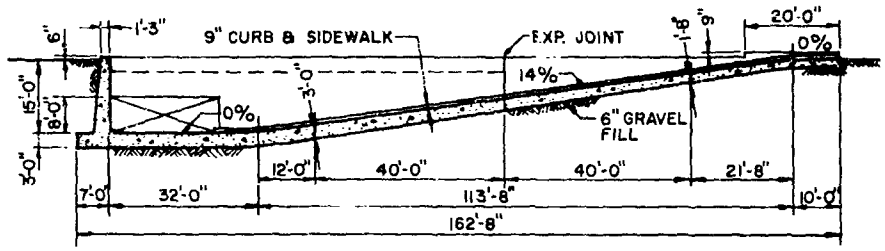

SECTION A-A

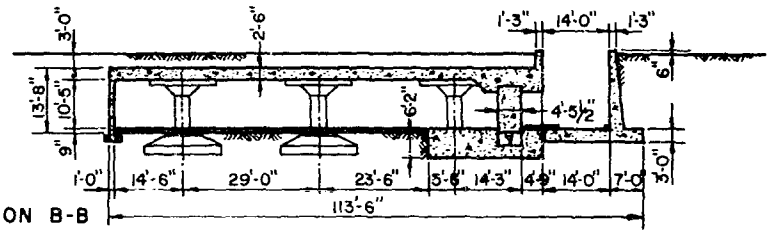

SECTION B-B

SHOT:

Name:	"Priscilla"
Type:	Balloon
Yield:	36.6 KT
Height of Burst:	700 feet
Date:	24 June 1957

TEST LAYOUT:

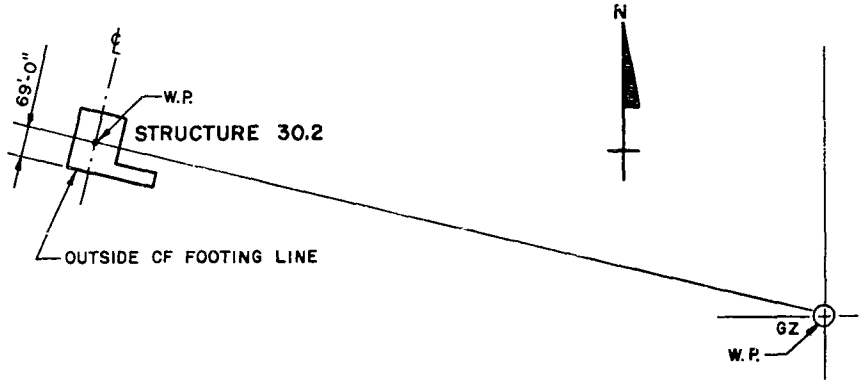

LOADING:
Limited information available. The peak incident overpressure measured on the earth surface was 42 psi.

SUMMARY:
The test structure provided adequate protection against blast and radiation. The rise in interior pressure did not exceed 1.0 psi. The only failures that occurred were the end retaining wall near the entrance and the pneumatic seal around the door frame. Instrumentation consisted of Wyancko pressure gages, Carlson earth pressure gages, dynamic pressure gages, and a self recording pressure gage. Radiation measurements were taken using film dosimeters, gamma radiation chemical dosimeters, and one gamma-rate telemetering unit.

OTHER REMARKS:
The flat-slab roof and supporting structure are more than adequate to resist the 42 psi peak incident test loading.

The shear stresses used for design were substantially in excess of values recommended by other sources and were conservative.

SUBSEQUENT TESTING: None

OPERATION: Plumbbob

PROJECT: 30.3

STRUCTURE IDENTIFICATION: 30.3

CROSS REFERENCE INDEX:
SEMI-BURIED CONCRETE — Semi-Buried Reinforced Concrete Family Shelters

REPORT REFERENCES:
ITR-1450
Civil Effects Test Group Report
Available through Office of Technical Services
Department of Commerce
Washington 25, D.C.

LOCATION: Frenchman's Flat
Nevada Test Site

OBJECTIVES:
To determine the level of protection afforded by a concrete family type shelter; and to collect data to aid in establishing criteria for future designs.

STRUCTURAL DESCRIPTION:
The three structures were constructed of reinforced concrete, and were designed to accommodate six persons and supplies for seven days. Added protection was gained by mounding earth over the reinforced concrete structures.

STRUCTURAL DETAILS: (See Page 145)

SOIL CHARACTERISTICS:
Soil consisted of a dessicated brown clayey silt.

PREVIOUS TESTING: None

STRUCTURAL DETAILS:

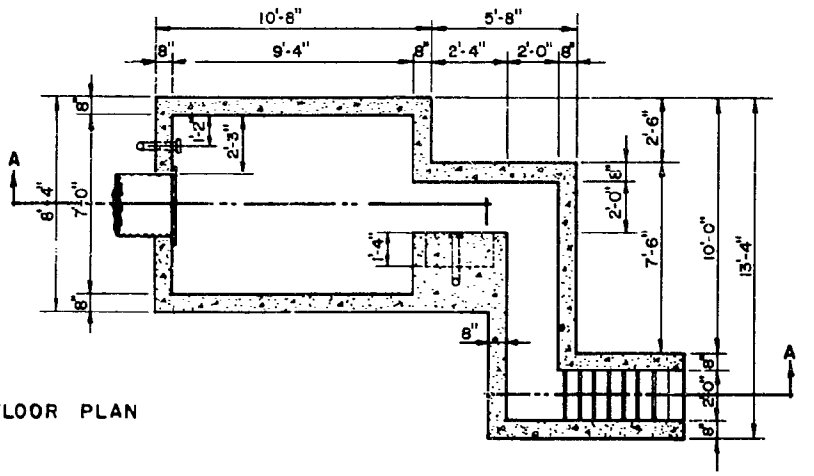

FLOOR PLAN

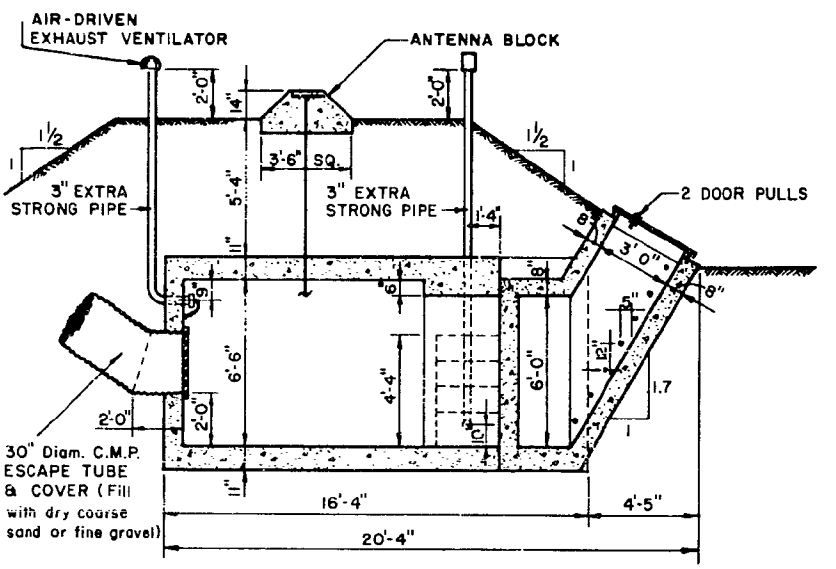

SECTION A-A

SHOT:

Name:	"Priscilla"
Type:	Balloon
Yield:	36.6 KT
Height of Burst:	700 feet
Date:	24 June 1957

TEST LAYOUT:
The ranges of the three structures that were placed at Frenchman's Flat were at overpressure locations of 65 psi, 48 psi, and 30 psi.

LOADING:
Only limited information available. Assumed loadings for the three structures are 65 psi, 48 psi, and 30 psi.

SUMMARY:
Examination revealed that there was little or no deflection in the reinforced concrete members. Permanent damage was confined to the exposed portions of the ventilation pipes, which were bent to a nearly horizontal position.

SUBSEQUENT TESTING: None

OPERATION: Plumbbob

PROJECT: 30.6

STRUCTURE IDENTIFICATION: 30.6 II-1

CROSS REFERENCE INDEX:
BURIED CONCRETE — Reinforced Concrete Box Section Personnel Shelter (French Type)

REPORT REFERENCES:
WT-1453
Civil Effects Test Group Report
Available through Office of Technical Services
Department of Commerce
Washington 25, D.C.

LOCATION: Yucca Flat
Nevada Test Site

OBJECTIVES:
Not available; however, it is presumed to be the evaluation of personnel structures subjected to overpressures from atomic weapons.

STRUCTURAL DESCRIPTION:
French personnel shelter Type 60 — buried reinforced concrete box structure, 2 feet thick in floor, walls, and roof.

STRUCTURAL DETAILS:

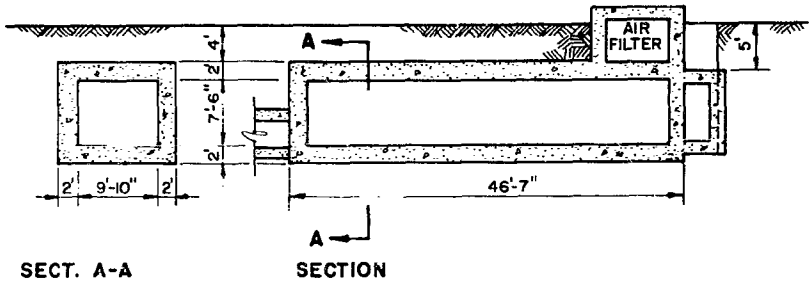

SECT. A-A SECTION

SOIL CHARACTERISTICS:
No soil data stated; however, backfill was typical of Yucca Flat at the Nevada Test Site. The alluvium in Yucca Flat varies in character from clayey and silt-sized particles, to cobbles and boulders. The composition of this material is chiefly limestone and volcanic tuff with smaller amounts of other volcanics, quartzite, conglomerate and sandstone. The alluvium is poorly consolidated except where the particles are cemented by caliche or where beds of caliche exist. Density of the alluvium varies from 1.3 to 1.8 kilograms per liter; that is, 88 to 112 pounds per cubic foot.

PREVIOUS TESTING:
None in the United States.

SHOT:

Name:	"Smoky"
Type:	Tower
Yield:	43.8 KT
Height of Burst:	700 feet
Date:	31 August 1957
Range:	approx. 900 feet

LOADING:

Peak Overpressure:	145 psi (approx.)
Positive Phase Duration:	0.24 sec

SUMMARY:
The exposed entranceways of the structure were scoured by the blast. Above ground air stacks were severely damaged. The pattern of cracks in the entranceway roof, walls and stairs indicated that the concrete construction was forced outward into the soil. Cracking was extensive but of small sizes. Only minor cracks occurred in the below ground areas.

OPERATION: Plumbbob

PROJECT: 30.6

STRUCTURE IDENTIFICATION: 30.6 II-2

CROSS REFERENCE INDEX:
BURIED CONCRETE — Precast Concrete Pipe Sections

REPORT REFERENCES:
WT-1453
Civil Effects Test Group Report
Available through Office of Technical Services
Departmer. of Commerce
Washington 25, D.C.

LOCATION: Yucca Flat
Nevada Test Site

OBJECTIVES:
Not available; however, it is presumed to be the evaluation of personnel structures subjected to overpressures from atomic weapons.

STRUCTURAL DESCRIPTION:
French personnel shelter Type 50. Buried reinforced concrete underground structure consisting of 10 inch thick precast rings. Entrance was of poured-in-place concrete.

STRUCTURAL DETAILS.

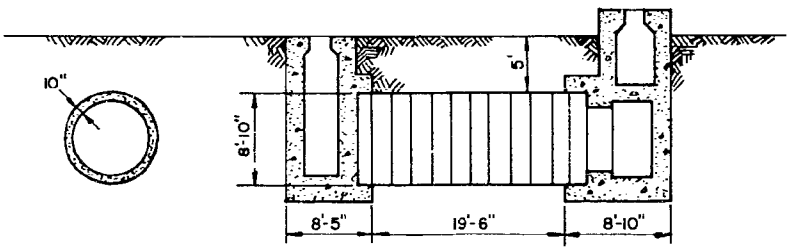

SECTION

SOIL CHARACTERISTICS:
No soil data stated; however, backfill was typical of Yucca Flat at the Nevada Test Site. The alluvium in Yucca Flat varies in character from clayey and silt-sized particles, to cobbles and boulders. The composition of this material is chiefly limestone and volcanic tuff with smaller amounts of other volcanics, quartzite, conglomerate and sandstone. The alluvium is poorly consolidated except where the particles are cemented by caliche or where beds of caliche exist. Density of the alluvium varies from 1.3 to 1.8 kilograms per liter; that is, 88 to 112 pounds per cubic foot.

PREVIOUS TESTING:
None in the United States.

SHOT:

Name:	"Smoky"
Type:	Tower
Yield:	43.8 KT
Height of Burst:	700 feet
Date:	31 August 1957
Range:	approx. 900 feet

LOADING:

Peak Overpressure:	115 psi (approx.)
Positive Phase Duration:	0.24 sec

SUMMARY:
No damage to poured concrete; however, circular precast rings exhibited extensive cracking and spalling.

OPERATION: Plumbbob

PROJECT: 30.6

STRUCTURE IDENTIFICATION: 30.6 II-3

CROSS REFERENCE INDEX:
BURIED CONCRETE — Reinforced Concrete Box Section Personnel Shelter (French Type)

REPORT REFERENCES:
WT-1453
Civil Effects Test Group Report
Available through Office of Technical Services
Department of Commerce
Washington 25, D.C.

LOCATION: Yucca Flat
Nevada Test Site

OBJECTIVES:
Not available; however, it is presumed to be the evaluation of personnel structures subjected to overpressures from atomic weapons.

STRUCTURAL DESCRIPTION:
French personnel shelter Type 65. Buried reinforced concrete structure with floor, walls, and roof two feet thick.

STRUCTURAL DETAILS: (See Page 152)

SOIL CHARACTERISTICS:
No soil data stated; however, backfill was typical of Yucca Flat at the Nevada Test Site. The alluvium in Yucca Flat varies in character from clayey and silt-sized particles, to cobbles and b oulders. The composition of this material is chiefly limestone and volcanic tuff with small amounts of other volcanics, quartzite, conglomerate and sandstone. The alluvium is poorly consolidated except where the particles are cemented by caliche or where beds of caliche exist. Density of the alluvium varies from 1.3 to 1.8 kilograms per liter; that is, 88 to 112 pounds per cubic foot.

STRUCTURAL DETAILS:

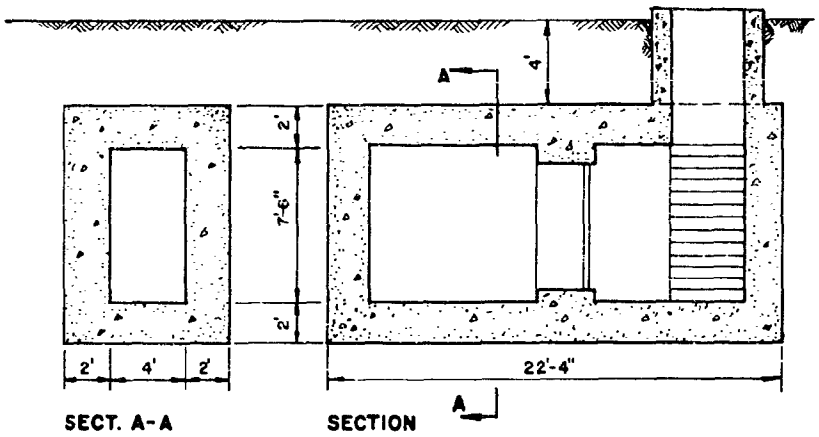

PREVIOUS TESTING:
None in the United States.

SHOT:

Name:	"Smoky"
Type:	Tower
Yield:	43.8 KT
Height of Burst:	700 feet
Date:	31 August 1957
Range:	approx. 900 feet

LOADING:

Peak Overpressure:	115 psi (approx.)
Positive Phase Duration:	0.24 sec

SUMMARY:
Minor damage observed. Minor cracking in walls (less than 1/32 inch width).

OPERATION: Plumbbob

PROJECT: 30.6

STRUCTURE IDENTIFICATION: 30.6 II-4

CROSS REFERENCE INDEX:
BURIED CONCRETE — Reinforced Concrete Box Section Personnel Shelter (French Type)

REPORT REFERENCES:
WT-1453
Civil Effects Test Group Report
Available through Office of Technical Services
Department of Commerce
Washington 25, D.C.

LOCATION: Yucca Flat
Nevada Test Site

OBJECTIVES:
Not available; however, it is presumed to be the evaluation of personnel structures subjected to overpressures from atomic weapons.

STRUCTURAL DESCRIPTION:
French personnel shelter Type 65. Buried reinforced concrete structure with floor, walls, and roof two feet thick.

STRUCTURAL DETAILS: (See Page 154)

SOIL CHARACTERISTICS:
No soil data stated; however, backfill was typical of Yucca Flat at the Nevada Test Site. The alluvium in Yucca Flat varies in character from clayey and silt-sized particles, to cobbles and boulders. The composition of this material is chiefly limestone and volcanic tuff with small amounts of other volcanics, quartzite, conglomerate and sandstone. The alluvium is poorly consolidated except where the particies are cemented by caliche or where beds of caliche exist. Density of the alluvium varies from 1.3 to 1.8 kilograms per liter; that is, 88 to 112 pounds per cubic foot.

STRUCTURAL DETAILS:

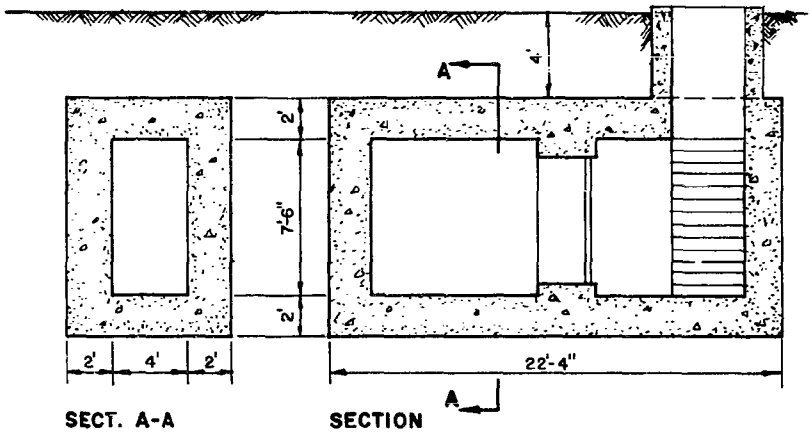

PREVIOUS TESTING:
None in the United States.

SHOT:

Name:	"Smoky"
Type:	Tower
Yield:	43.8 KT
Height of Burst:	700 feet
Date:	31 August 1957
Range:	approx. 900 feet

LOADING:

Peak Overpressure:	115 psi (approx.)
Positive Phase Duration:	0.24 sec

SUMMARY:
Minor structural damage. Entrance facing away from ground zero was badly damaged.

OPERATION: Plumbbob

PROJECT: 30.6

STRUCTURE IDENTIFICATION: 30.6 II-5

CROSS REFERENCE INDEX:
BURIED CONCRETE — Reinforced Concrete Box Section Personnel Shelter (French Type)

REPORT REFERENCES:
WT 1453
Civil Effects Test Group Report
Available through Office of Technical Services
Department of Commerce
Washington 25, D.C.

LOCATION: Yucca Flat
Nevada Test Site

OBJECTIVES:
Not available; however, it is presumed to be the evaluation of personnel structures subjected to overpressures from atomic weapons.

STRUCTURAL DESCRIPTION:
French personnel shelter Type 65. Buried reinforced concrete structure with floor, walls, and roof two feet thick.

STRUCTURAL DETAILS: (See Page 156)

SOIL CHARACTERISTICS:
No soil data stated; however, backfill was typical of Yucca Flat at the Nevada Test Site. The alluvium in Yucca Flat varies in character from clayey and silt-sized particles, to cobbles and boulders. The composition of this material is chiefly limestone and volcanic tuff with small amounts of other volcanics, quartzite, conglomerate and sandstone. The alluvium is poorly consolidated except where the particles are cemented by caliche or where beds of caliche exist. Density of the alluvium varies from 1.3 to 1.8 kilograms per liter; that is, 88 to 112 pounds per cubic foot.

STRUCTURAL DETAILS:

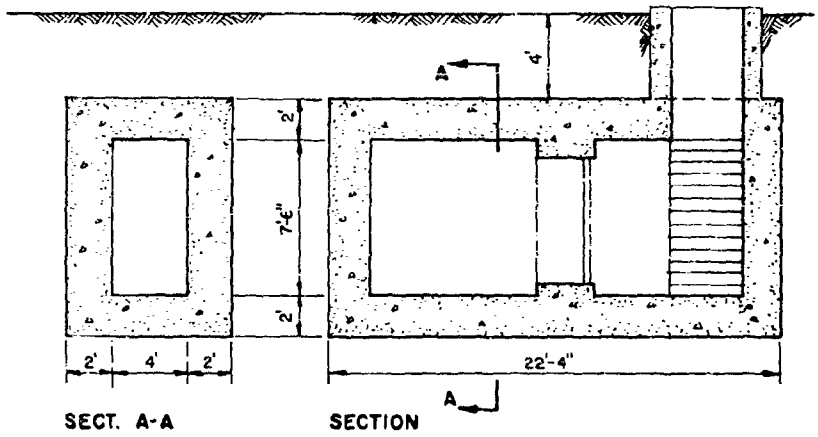

PREVIOUS TESTING:
None in the United States.

SHOT:

Name:	"Smoky"
Type:	Tower
Yield:	43.8 KT
Height of Burst:	700 feet
Date:	31 August 1957
Range:	approx. 1000 feet

LOADING:

Peak Overpressure:	115 psi (approx.)
Positive Phase Duration:	0.26 sec

SUMMARY:
Very minor structural damage to buried portions.

OPERATION: Plumbbob

PROJECT: 30.7

STRUCTURE IDENTIFICATION: 30.7 RAa

CROSS REFERENCE INDEX:
BURIED CONCRETE — Reinforced Concrete Box Section Personnel Shelter (German Type)

REPORT REFERENCES:
WT-1454
Civil Effects Test Group Report
Available through Office of Technical Services
Department of Commerce
Washington 25, D.C.

LOCATION: Yucca Flat
Nevada Test Site

OBJECTIVES:
Not available; however, it is presumed to be the evaluation of personnel structures subjected to overpressures from atomic weapons.

STRUCTURAL DESCRIPTION:
German personnel shelter Type A. Buried rectangular reinforced concrete box with haunched roof.

STRUCTURAL DETAILS: (See Page 158)

SOIL CHARACTERISTICS:
No soil data stated; however, backfill was typical of Yucca Flat at the Nevada Test Site. The alluvium in Yucca Flat varies in character from clayey and silt-sized particles, to cobbles and boulders. The composition of this material is chiefly limestone and volcanic tuff with small amounts of other volcanics, quartzite, conglomerate and sandstone. The alluvium is poorly consolidated except where the particles are cemented by caliche or where beds of caliche exist. Density of the alluvium varies from 1.3 to 1.8 kilograms per liter; that is, 88 to 112 pounds per cubic foot.

STRUCTURAL DETAILS:

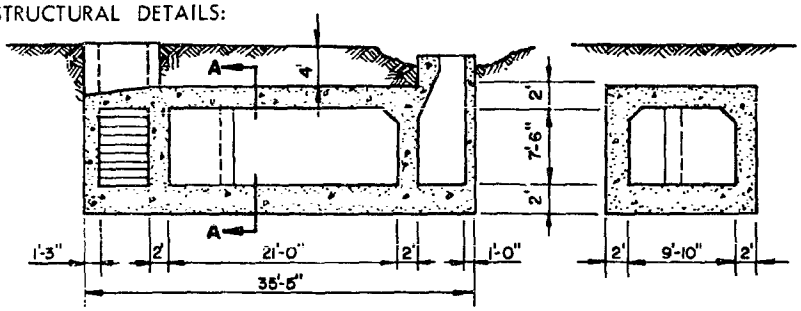

SECTION **SECT. A-A**

PREVIOUS TESTING:
None in the United States.

SHOT:

Name:	"Smoky"
Type:	Tower
Yield:	3.8 KT
Height of Burst:	700 feet
Date:	31 August 1957
Range:	840 feet

LOADING:

Peak Overpressure:	190 psi
Positive Phase Duration:	0.11 sec

SUMMARY:
Only hairline cracks were observed in buried portions of structure, however, the entranceway was badly damaged.

OPERATION: Plumbbob

PROJECT: 30.7

STRUCTURE IDENTIFICATION: 30.7 RAb

CROSS REFERENCE INDEX:
BURIED CONCRETE — Reinforced Concrete Box Section Personnel Shelter (German Type)

REPORT REFERENCES:
WT-1454
Civil Effects Test Group Report
Available through Office of Technical Services
Department of Commerce
Washington 25, D.C.

LOCATION: Yucca Flat
Nevada Test Site

OBJECTIVES:
Not available; however, it is presumed to be the evaluation of personnel structures subjected to overpressures from atomic weapons.

STRUCTURAL DESCRIPTION:
German personnel shelter Type A. Buried rectangular reinforced concrete box with haunched roof.

STRUCTURAL DETAILS: (See Page 160)

SOIL CHARACTERISTICS:
No soil data stated; however, backfill was typical of Yucca Flat at the Nevada Test Site. The alluvium in Yucca Flat varies in character from clayey and silt-sized particles, to cobbles and boulders. The composition of this material is chiefly limestone and volcanic tuff with small amounts of other volcanics, quartzite, conglomerate and sandstone. The alluvium is poorly consolidated except where the particles are cemented by caliche or where beds of caliche exist. Density of the alluvium varies from 1.3 to 1.8 kilograms per liter; that is, 88 to 112 pounds per cubic foot.

STRUCTURAL DETAILS:

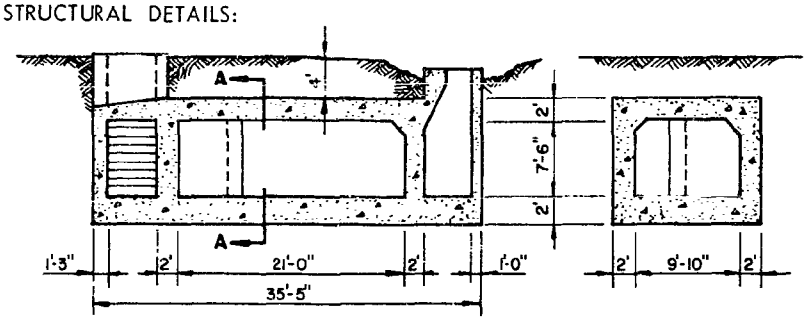

SECTION **SECT. A-A**

PREVIOUS TESTING:
None in the United States.

SHOT:

Name:	"Smoky"
Type:	Tower
Yield:	43.8 KT
Height of Burst:	700 feet
Date:	31 August 1957
Range:	1000 feet

LOADING:

Peak Overpressure:	115 psi
Positive Phase Duration:	0.26 sec

SUMMARY:
The main structure had 1/32 inch cracks in the floor and hairline cracks in the roof and wall. The entranceway was damaged extensively.

OPERATION: Plumbbob

PROJECT: 30.7

STRUCTURE IDENTIFICATION: 30.7 RAc

CROSS REFERENCE INDEX:
BURIED CONCRETE — Reinforced Concrete Box Section Personnel Shelter (German Type)

REPORT REFERENCES:
WT-1454
Civil Effects Test Group Report
Available through Office of Technical Services
Department of Commerce
Washington 25, D.C.

LOCATION: Yucca Flat
Nevada Test Site

OBJECTIVES:
Not available; however, it is presumed to be the evaulation of personnel structures subjected to overpressures from atomic weapons.

STRUCTURAL DESCRIPTION:
German personnel shelter Type A. Buried rectangular reinforced concrete box with haunched roof.

STRUCTURAL DETAILS: (See Page 162)

SOIL CHARACTERISTICS:
No soil data stated; however, backfill was typical of Yucca Flat at the Nevada Test Site. The alluvium in Yucca Flat varies in character from clayey and silt-sized particles, to cobbles and boulders. The composition of this material is chiefly limestone and volcanic tuff with small amounts of other volcanics, quartzite, conglomerate and sandstone. The alluvium is poorly consolidated except where the particles are cemented by caliche or where beds of caliche exist. Density of the alluvium varies from 1.3 to 1.8 kilograms per liter; that is, 88 to 112 pounds per cubic foot.

STRUCTURAL DETAILS:

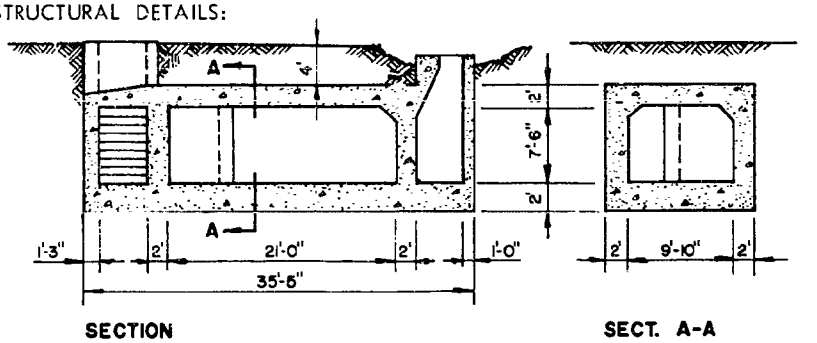

PREVIOUS TESTING:
None in the United States.

SHOT:

Name:	"Smoky"
Type:	Tower
Yield:	43.8 KT
Height of Burst:	700 feet
Date:	31 August 1957
Range:	1000 feet

LOADING:

Peak Overpressure:	115 psi
Positive Phase Duration:	0.26 sec

SUMMARY:
Hairline flexural cracks only observed in main structure. Numerous cracks in entranceway.

OPERATION: Plumbbob

PROJECT: 30.7

STRUCTURE IDENTIFICATION: 30.7 RAd

CROSS REFERENCE INDEX:
BURIED CONCRETE — Reinforced Concrete Box Section Personnel Shelter (German Type)

REPORT REFERENCES:
WT-1454
Civil Effects Test Group Report
Available through Office of Technical Services
Department of Commerce
Washington 25, D.C.

LOCATION: Yucca Flat
Nevada Test Site

OBJECTIVES:
Not available; however, it is presumed to be the evaluation of personnel structures subjected to overpressures from atomic weapons.

STRUCTURAL DESCRIPTION:
German personnel shelter Type A. Buried rectangular reinforced concrete box with haunched roof.

STRUCTURAL DETAILS: (See Page 164)

SOIL CHARACTERISTICS:
No soil data stated; however, backfill was typical of Yucca Flat at the Nevada Test Site. The alluvium in Yucca Flat varies in character from clayey and silt-sized particles, to cobbles and boulders. The composition of this material is chiefly limestone and volcanic tuff with small amounts of other volcanics, quartzite, conglomerate and sandstone. The alluvium is poorly consolidated except where the particles are cemented by caliche or where beds of caliche exist. Density of the alluvium varies from 1.3 to 1.8 kilograms per liter; that is, 88 to 112 pounds per cubic foot.

STRUCTURAL DETAILS:

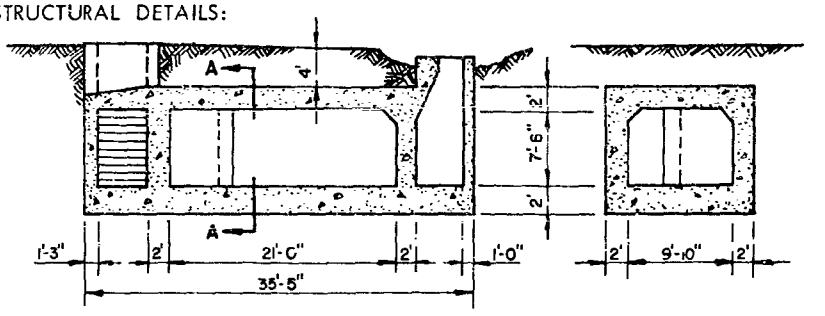

SECTION SECT. A-A

PREVIOUS TESTING:
None in the United States.

SHOT:

Name:	"Smoky"
Type:	Tower
Yield:	43.8 KT
Height of Burst:	700 feet
Date:	31 August 1957
Range:	1176 feet

LOADING:

Peak Overpressure:	82 psi
Positive Phase Duration:	0.30 sec

SUMMARY:
No damage to shelter; however, slight damage to entranceway.

OPERATION: Plumbbob

PROJECT: 30.7

STRUCTURE IDENTIFICATION: 30.7 CAa

CROSS REFERENCE INDEX:
BURIED CONCRETE — Reinforced Concrete Cylindrical Section
Personnel Shelter (German Type)

REPORT REFERENCES:
WT-1454
Civil Effects Test Group Report
Available through Office of Technical Services
Department of Commerce
Washington 25, D.C.

LOCATION: Yucca Flat
Nevada Test Site

OBJECTIVES:
Not available; however, it is presumed to be the evaluation of personnel structures subjected to overpressures from atomic weapons.

STRUCTURAL DESCRIPTION:
German personnel shelter Type A. Cylindrical poured-in-place reinforced concrete shelter.

STRUCTURAL DETAILS:

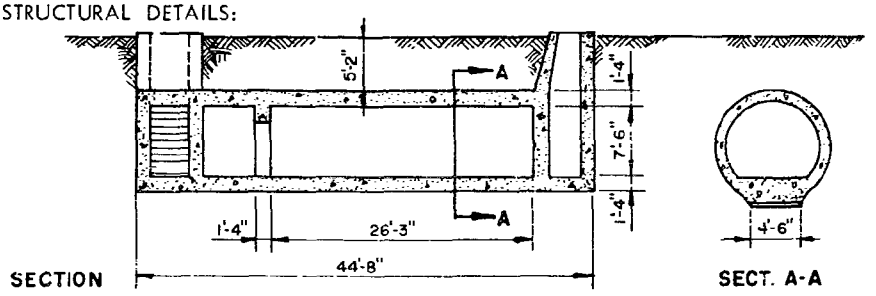

SOIL CHARACTERISTICS:
No soil data stated; however, backfill was typical of Yucca Flat at the Nevada Test Site. The alluvium in Yucca Flat varies in character from clayey and silt-sized particles, to cobbles and boulders. The composition of this material is chiefly limestone and volcanic tuff with small amounts of other volcanics, quartzite, conglomerate and sandstone. The alluvium is poorly consolidated except where the particles are cemented by caliche or where beds of caliche exist. Density of the alluvium varies from 1.3 to 1.8 kilograms per liter; that is, 88 to 112 pounds per cubic foot.

PREVIOUS TESTING:
None in the United States.

SHOT:

Name:	"Smoky"
Type:	Tower
Yield:	43.8 KT
Height of Burst:	700 feet
Date:	31 August 1957
Range:	900 feet

LOADING:

Peak Overpressure:	160 psi
Positive Phase Duration:	0.24 sec

SUMMARY:
No damage to structure except for emergency hatch.

OPERATION: Plumbbob

PROJECT: 30.7

STRUCTURE IDENTIFICATION: 30.7 CAb

CROSS REFERENCE INDEX:
BURIED CONCRETE — Reinforced Concrete Cylindrical Section
Personnel Shelter (German Type)

REPORT REFERENCES:
WT-1454
Civil Effects Test Group Report
Available through Office of Technical Services
Department of Commerce
Washington 25, D.C.

LOCATION: Yucca Flat
Nevada Test Site

OBJECTIVES:
Not available; however, it is presumed to be the evaluation of personnel structures subjected to overpressures from atomic weapons.

STRUCTURAL DESCRIPTION:
German personnel shelter Type A. Cylindrical poured-in-place reinforced concrete shelter.

STRUCTURAL DETAILS:

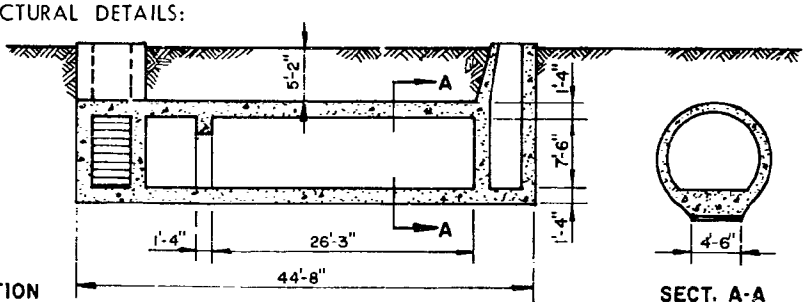

SECTION

SECT. A-A

SOIL CHARACTERISTICS:
No soil data stated; however, backfill was typical of Yucca Flat at the Nevada Test Site. The alluvium in Yucca Flat varies in character from clayey and silt-sized particles, to cobbles and boulders. The composition of this material is chiefly limestone and volcanic tuff with small amounts of other volcanics, quartzite, conglomerate and sandstone. The alluvium is poorly consolidated except where the particles are cemented by caliche or where beds of caliche exist. Density of the alluvium varies from 1.3 to 1.8 kilograms per liter; that is, 88 to 112 pounds per cubic foot.

PREVIOUS TESTING:
None in the United States.

SHOT:

Name:	"Smoky"
Type:	Tower
Yield:	43.8 KT
Height of Burst:	700 feet
Date:	31 August 1957
Range:	1000 feet

LOADING:

Peak Overpressure:	115 psi
Positive Phase Duration:	0.26 sec

SUMMARY:
No damage to structure except for emergency hatch.

OPERATION: Plumbbob

PROJECT: 30.7

STRUCTURE IDENTIFICATION: 30.7 RCa

CROSS REFERENCE INDEX:
BURIED CONCRETE — Reinforced Concrete Box Section Personnel Shelter (German Type)

REPORT REFERENCES.
WT-1454
Civil Effects Test Group Report
Available through Office of Technical Services
Department of Commerce
Washington 25, D.C.

LOCATION: Yucca Flat
Nevada Test Site

OBJECTIVES:
Not available; however, it is presumed to be the evaluation of personnel structures subjected to overpressures from atomic weapons.

STRUCTURAL DESCRIPTION:
German personnel shelter Type C. Buried reinforced concrete retangular structure with walls, floor, and roof 1'-0" thick.

STRUCTURAL DETAILS:

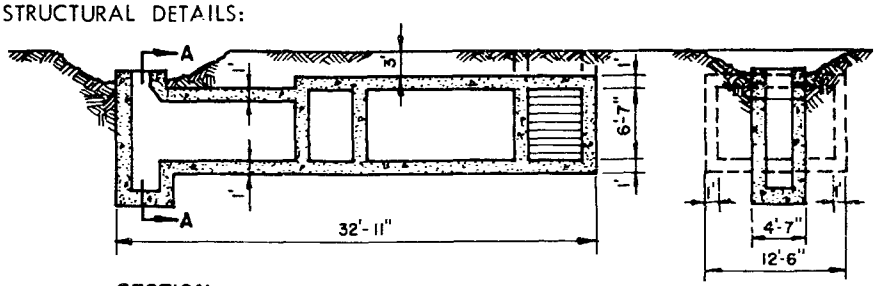

SECTION

SECT. A-A

SOIL CHARACTERISTICS:
No soil data stated; however, backfill was typical of Yucca Flat at the Nevada Test Site. The alluvium in Yucca Flat varies in character from clayey and silt-sized particles, to cobbles and boulders. The composition of this material is chiefly limestone and volcanic tuff with small amounts of other volcanics, quartzite, conglomerate and sandstone. The alluvium is poorly consolidated except where the particles are cemented by caliche or where beds of caliche exist. Density of the alluvium varies from 1.3 to 1.8 kilograms per liter; that is, 88 to 112 pounds per cubic foot.

PREVIOUS TESTING:
None in the United States.

SHOT:

Name:	"Smoky"
Type:	Tower
Yield:	43.8 KT
Height of Burst:	700 feet
Date:	31 August 1957
Range:	1770 feet

LOADING:

Peak Overpressure:	27 psi
Positive Phase Duration:	0.48 sec

SUMMARY:
Minor cracks (1/32 inch or less) throughout the structure.

OPERATION: Plumbbob

PROJECT: 34.3

STRUCTURE IDENTIFICATION: 34.3-01 and 34.3-02

CROSS REFERENCE INDEX:
BURIED STEEL — Corrugated Steel Pipe Sections

REPORT REFERENCES:
WT-1474
Civil Effects Test Group Report
Available through Office of Technical Services
Department of Commerce
Washington 25, D.C.

LOCATION: Yucca Flat
Nevada Test Site

OBJECTIVES:
To determine the resistance of buried structural-plate pipe to high overpressures.

STRUCTURAL DESCRIPTION:
Structural-plate pipe of curved, sectional, 10 gage corrugated metal plates having longitudinal and circumferential bolted seams. Corrugations are nominally 2 inches deep and spaced 6 inches apart. The pipe sections used were 20 feet long and 7 feet in diameter.

STRUCTURAL DETAILS: (See Page 172)

SOIL CHARACTERISTICS:
The backfill material was sandy gravel with a maximum density of 122 pcf and a moisture content of 10.5 percent. The average compaction attained was about 93 percent of maximum. Direct shear tests indicated an internal coefficient of friction of 1.42 in one case and 0.875 in another.

PREVIOUS TESTING:
Somewhat similar structures were tested in Operation Plumbbob, Project 3.2 (WT-1421). (See text page 121)

STRUCTURAL DETAILS:

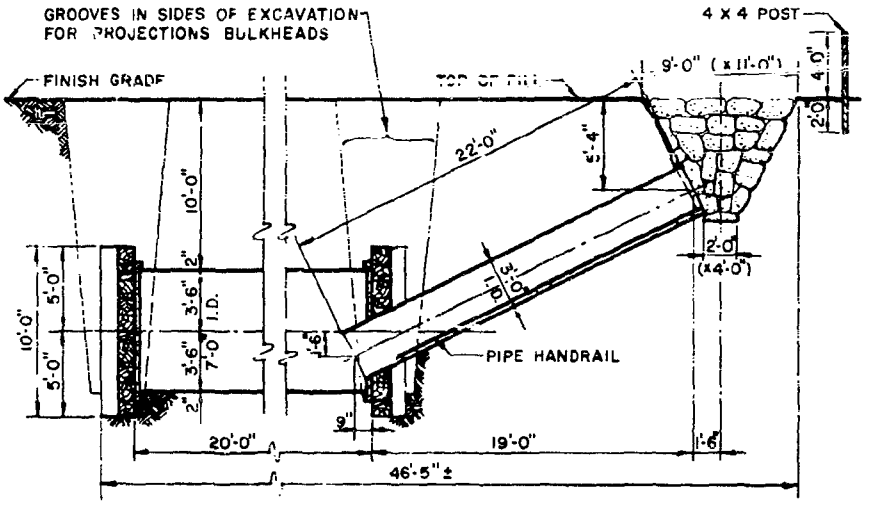

SHOT:

Name:	"Smoky"
Type:	Tower
Yield:	44 KT
Height of Burst:	700 feet
Date:	31 August 1957

TEST LAYOUT:
One structure was located 825 feet from ground zero and the other, 900 feet from ground zero with the axis of the pipe perpendicular to a ray from ground zero.

LOADING:
(Overpressure at earth surface)

34.3-01:	245 psi
34.3-02:	140 psi

SUMMARY:
Maximum transient changes in vertical and horizontal diameters measured by the self-recording gages were about 7/8 inch and 3/8 inch, respectively. Maximum residual changes in the same diameters were 3/4 inch and 1/4 inch, respectively. Discrepancies were found between measurements of residual changes recorded by the gages and those obtained visually before and after the event.

OTHER REMARKS:
These structures were similar to those evaluated as part of Operation Plumbbob, Project 3.2. The soil conditions for each project were quite different. The deflections experienced in Project 34.3 were considerably smaller than might be tolerated under certain conditions; hence, an upper limit of survival has not yet been established for structures of this type.

SUBSEQUENT TESTING: None

OPERATION: Plumbbob

PROJECT: Test Support Station

STRUCTURE IDENTIFICATION: Station T 3B

CROSS REFERENCE INDEX:
TEST SUPPORT STATION — Massive Reinforced Concrete Semi-Buried Shelter.

REPORT REFERENCES:
ITR-1455
Defense Atomic Support Agency
Washington 25, D.C.

LOCATION. Frenchman's Flat
Nevada Test Site

OBJECTIVES: (Non-experimental structure)
Structure used for test support purposes, thus only visual post shot inspections were made.

STRUCTURAL DESCRIPTION:
Reinforced concrete test facility shelter. Top surface was flush with the grade and covered with five feet of earth.

STRUCTURAL DETAILS: (See Page 175)

SOIL CHARACTERISTICS:
No soil data given; but soil at Frenchman's Flat consists of silt with a trace of clay, and has a maximum dry density of 96 to 108 pcf.

PREVIOUS TESTING: None

STRUCTURAL DETAILS:

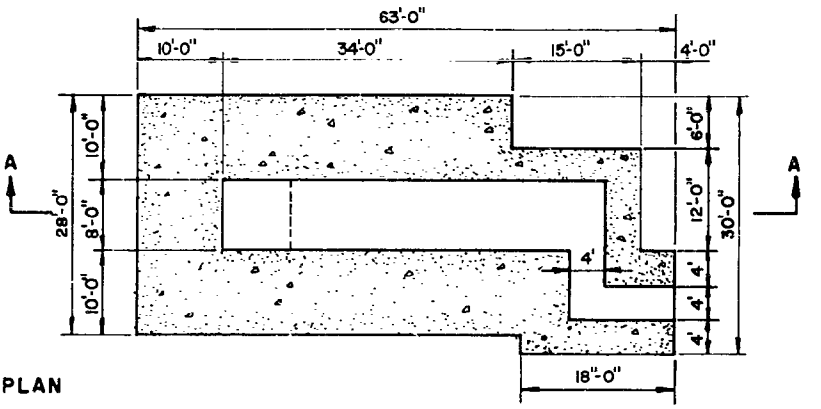

PLAN

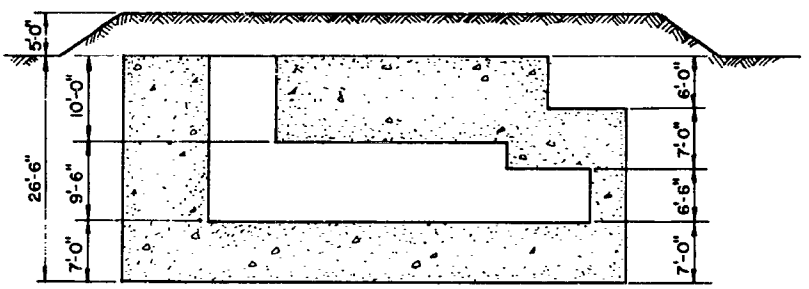

SECTION A-A

SHOT:

Name:	"Fizeau"
Type:	Tower
Yield:	11 KT
Height of Burst:	500 feet
Date:	14 Sept 1957
Range:	zero

LOADING:

Peak Overpressure: 315 psi

SUMMARY:
Transient displacement of 6.5 inches downward and permanent displacements of 1.5 inches downward were noted. No other damage was noted.

OTHER REMARKS:
Measurements of earth pressure and deflection were not made for this test station; hence, loading and response data was collected only for general information purposes.

OPERATION: Plumbbob

PROJECT: Test Support Station

STRUCTURE IDENTIFICATION: Station 7-300

CROSS REFERENCE INDEX:
TEST SUPPORT STATION — Massive Reinforced Concrete Semi-Buried Shelter

REPORT REFERENCES:
ITR-1455
Defense Atomic Support Agency
Washington 25, D.C.

LOCATION: Yucca Flat
Nevada Test Site

OBJECTIVES: (Non-experimental structure)
Structure used for test support purposes, thus only visual past shot inspections were made.

STRUCTURAL DESCRIPTION:
Massive reinforced concrete test facility located below grade covered with mounded earth.

STRUCTURAL DETAILS: (See Page 178)

SOIL CHARACTERISTICS:
No soil data stated; however, backfill was typical of Yucca Flat at the Nevada Test Site. The alluvium in Yucca Flat varies in character from clayey and silt-sized particles, to cobbles and boulders. The composition of this material is chiefly limestone and volcanic tuff with small amounts of other volcanics, quartzite, conglomerate and sandstone. The alluvium is poorly consolidated except where the particles are cemented by caliche or where beds of caliche exist. Density of the alluvium varies from 1.3 to 1.8 kilograms per liter; that is, 88 to 112 pounds per cubic foot.

STRUCTURAL DETAILS:

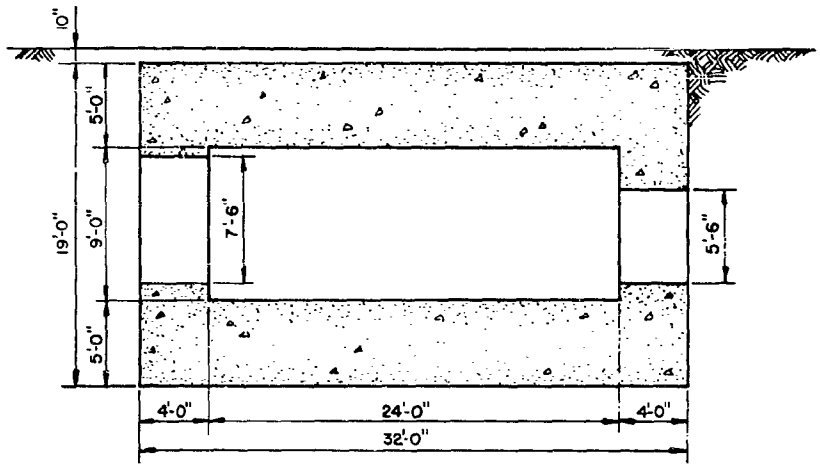

PREVIOUS TESTING: None

SHOT:

Name:	"Stokes"	"Doppler"	"LaPlace"
Type:	Balloon	Balloon	Balloon
Yield:	19 KT	10.5 KT	1.22 KT
Height of Burst:	1,500 feet	1,500 feet	750 feet
Date:	7 Aug 1957	23 Aug 1957	8 Sept 1957
Range:	60 feet	60 feet	60 feet
Peak Overpressure:	45 psi	25 psi	25 psi

Name:	"Newton"	"Franklin'"
Type:	Balloon	Balloon
Yield:	12.0 KT	4.7 KT
Height of Burst:	1,500 feet	750 feet
Date:	16 Sept 1957	30 Aug 1957
Range:	60 feet	60 feet
Peak Overpressure:	30 psi	65 psi

SUMMARY:
No damage experienced by the loadings above.

OTHER REMARKS:
Measurements of earth pressure and deflection were not made for this test station; hence, loading and response data was collected only for general information purposes.

OPERATION: Plumbbob

PROJECT: Test Support Station

STRUCTURE IDENTIFICATION: Station 9-22-6001

CROSS REFERENCE INDEX:
TEST SUPPORT STATION — Massive Reinforced Concrete Semi-Buried Shelter

REPORT REFERENCES:
ITR-1455
Defense Atomic Support Agency
Washington 25, D.C.

LOCATION: Yucca Flat
Nevada Test Site

OBJECTIVES: (Non-experimental structure)
Structure used for test support purposes, thus only visual post shot inspections were made.

STRUCTURAL DESCRIPTION:
Massive reinforced concrete test facility located below grade, covered with mounded earth.

STRUCTURAL DETAILS: (See Page 181)

SOIL CHARACTERISTICS:
No soil data stated; however, backfill was typical of Yucca Flat at the Nevada Test Site. The alluvium in Yucca Flat varies in character from clayey and silt-sized particles, to cobbles and boulders. The composition of this material is chiefly limestone and volcanic tuff with small amounts of other volcanics, quartzite, conglomerate and sandstone. The alluvium is poorly consolidated except where the particles are cemented by caliche or where beds of caliche exist. Density of the alluvium varies from 1.3 to 1.8 kilograms per liter; that is, 88 to 112 pounds per cubic foot.

STRUCTURAL DETAILS:

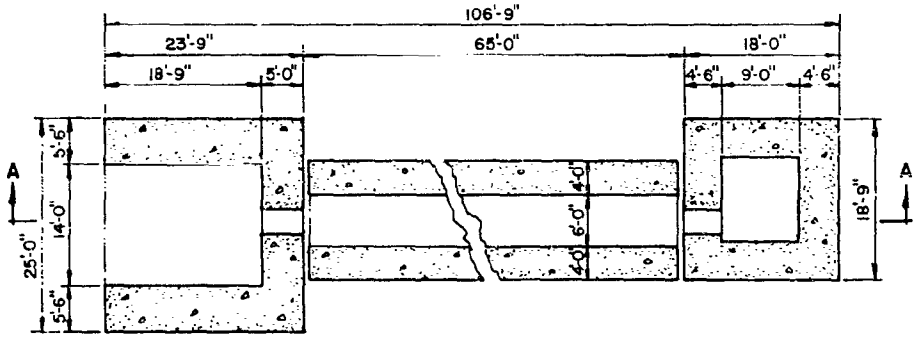

PLAN

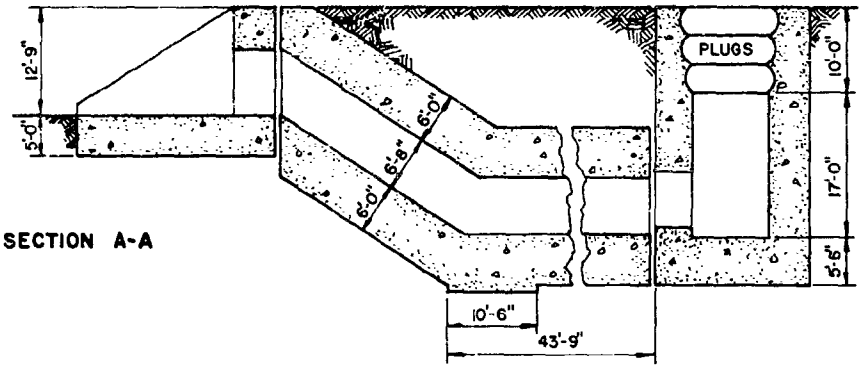

SECTION A-A

PREVIOUS TESTING: None

SHOT:

Name:	"Lassen"	"Wilson"	"Hood"
Type:	Balloon	Balloon	Balloon
Yield:	0.47 KT	10.3 KT	74.3 KT
Height of Burst:	500 feet	500 feet	1,500 feet
Date:	5 June 1957	18 June 1957	5 July 1957
Range:	25 feet	25 feet	25 feet
Peak Overpressure:	35 psi	290 psi	60 psi

SHOT: (con't)

Name:	"Owens"	"Wheeler"	"Charleston"	"Morgan"
Type:	Balloon	Balloon	Balloon	Balloon
Yield:	9.7 KT	0.19 KT	11.5 KT	8.0 KT
Height of Burst:	500 feet	500 feet	1,500 feet	500 feet
Date:	25 July 1957	6 Sept 1957	28 Sept 1957	7 Oct 1957
Range:	25 feet	25 feet	25 feet	25 feet
Peak Overpressure:	140 psi	20 psi	25 psi	250 psi

SUMMARY:
There was no damage from shots "Lassen", "Wilson", and "Hood". Spalling was evident after shot "Owens". Severe cracking occurred from shot "Morgan". Upon completion of the series of tests, the roof was cracked and spalled, thereby exposing reinforcing steel.

OTHER REMARKS:
Measurements of earth pressure and deflection were not made for this test station; hence, loading and response data was collected only for general information purposes.

OPERATION: Hardtack

PROJECT: 1.9

STRUCTURE IDENTIFICATION: 1.9

CROSS REFERENCE INDEX:
LOADING-RESPONSE EXPERIMENTAL SYSTEMS — Buried Response Cylinders (Drums with Flexible Diaphragms)

REPORT REFERENCES:
WT-1614
Defense Atomic Support Agency
Washington 25, D.C.

LOCATION: Gene (Teiteiribucchi) and Yvonne (Runit)
Eniwetok Proving Grounds

OBJECTIVES:
To study some of the factors affecting the transmission of air-blast-induced pressure through soil and the loading produced on buried structures. Pressures studied were in the range of approximately 250 psi.

Factors that were studied:
(1) Attenuation of pressure transmitted through unsaturated silt containing a trace of clay.
(2) The effect of surface peak overpressure on the pressure transmitted through such a soil.
(3) The effect of structure flexibility on the loading of structures buried in such a soil.
(4) The relationship between horizontal and vertical pressures on structures buried in such a soil.

STRUCTURAL DESCRIPTION:
The simulated structures consisted of 43 devices, each of which was a rigid cylinder having one rigid end and one deformable diaphragm end. Different thicknesses of diaphragm were used, and the devices were buried at depths ranging from 0 to 20 feet.

STRUCTURAL DETAILS:

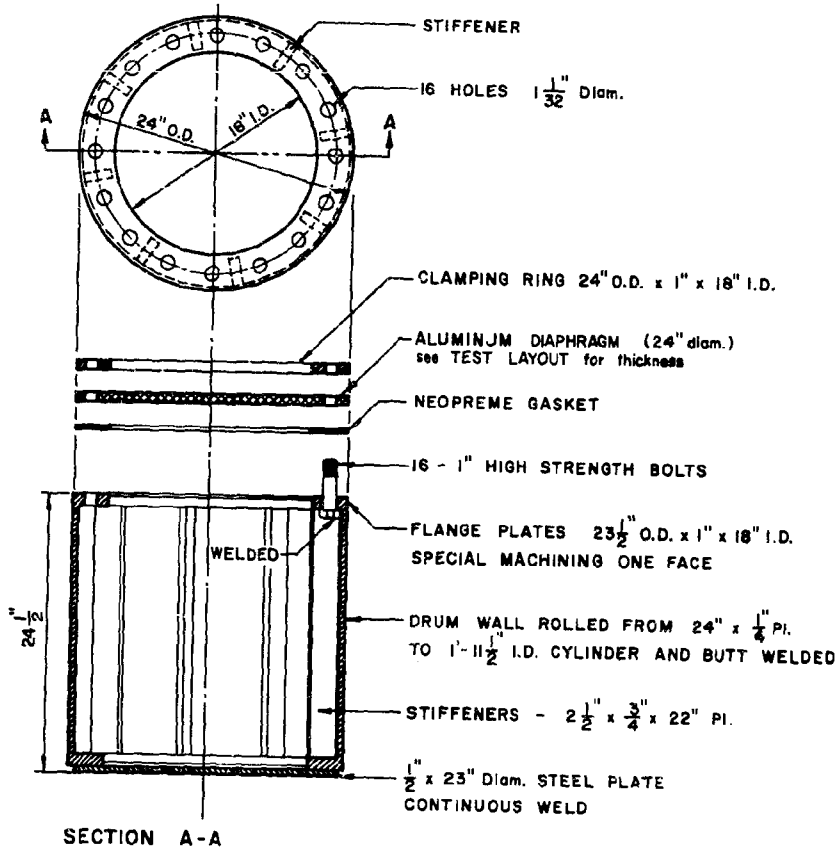

SECTION A-A

SOIL CHARACTERISTICS:
Sand with the water table from 3.5 to 4.5 feet below the ground surface.

PREVIOUS TESTING:
Similar cylinders with a deformable diaphragm were tested in Operation Plumbbob, Project 1.7 (WT-1406). (See text page 109)

SHOT:

Name:	"Koa"	"Cactus"
Type:	Surface	Surface
Yield:	1.3 MT	18 KT
Height of Burst:	zero	zero
Date:	12 May 1958	5 May 1958

TEST LAYOUT:

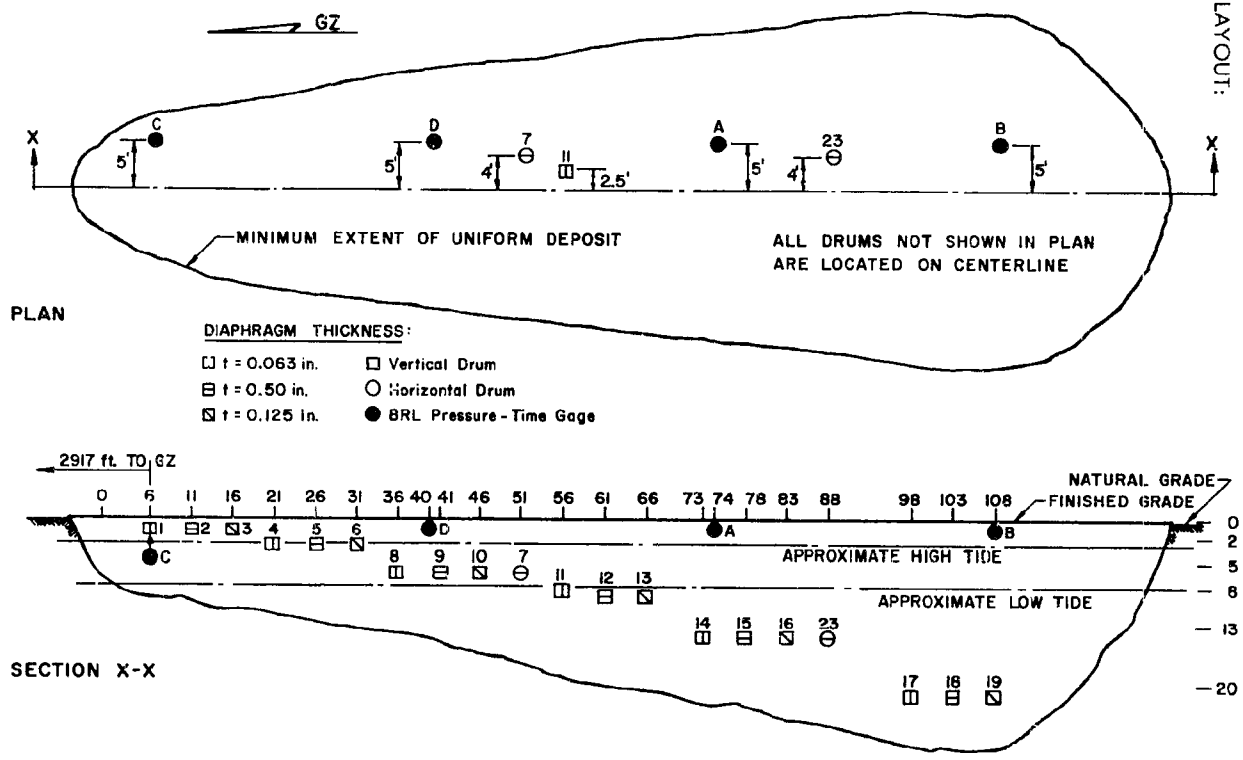

Drum Layout for Shot "Koa"

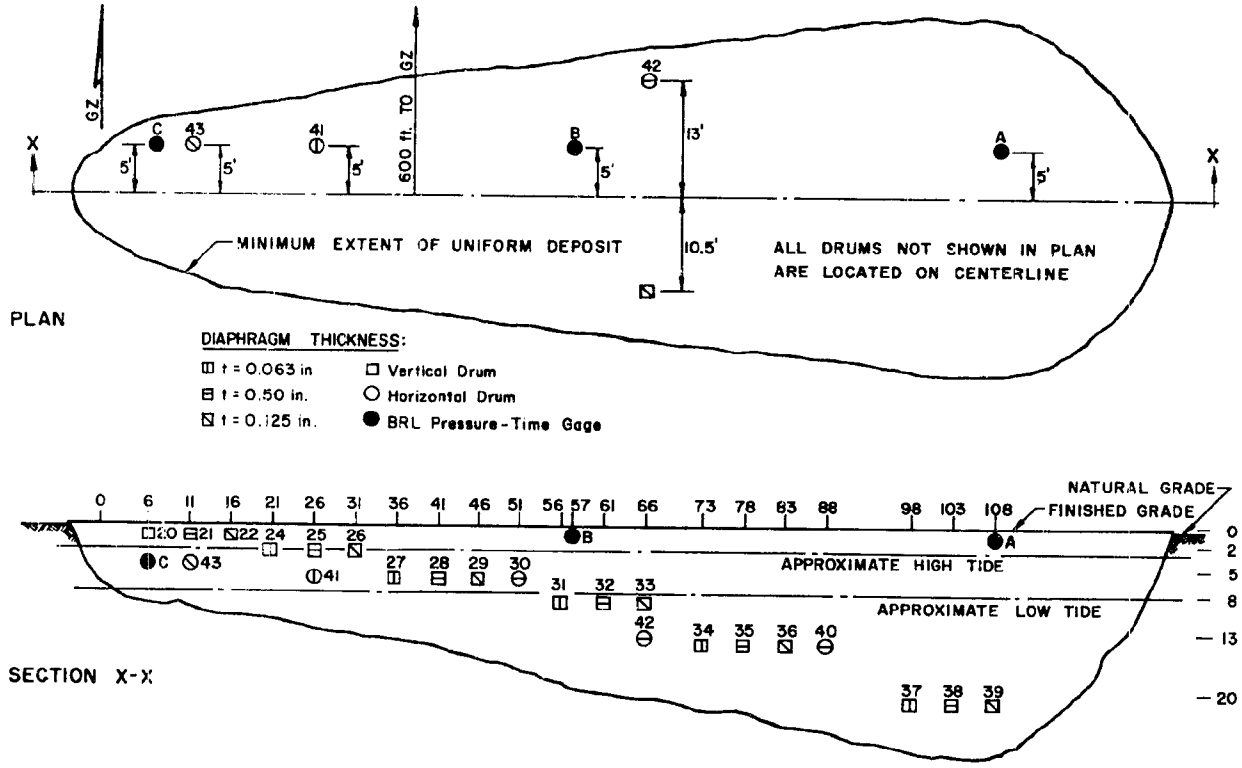

Drum Layout for Shot "Cactus"

LOADING:
(Overpressures at ground surface)
Shot "Koa":

Precursor:	None
Main Pulse:	Rise Time — essentially zero
	Peak Overpressure — 240 psi

Shot "Cactus":

Precursor:	None
Main Pulse:	Rise Time — essentially zero
	Peak Overpressure — 304 psi

SUMMARY:
On the basis of a very limited amount of data and in view of the apparent presence of a large water-transmitted pressure pulse, the following conclusions can be made:

(1) For a soil deposit consisting of loose beach sand, such as that found at Eniwetok Proving Grounds, there is considerable attenuation of an air-induced, ground-transmitted pressure. This is true not only above the water table, but also for at least a few feet below it. The presence of the horizontal water-transmitted pressure obscured this effect at depths greater than that. The amount of this attenuation in the soil deposit is approximately the same as was found in the tan silt deposit at the Nevada Test Site, which was about 20 percent in the first 5 feet of depth.

(2) The difference between the positive-phase duration of a kiloton detonation and that of a megaton detonation appears to have no appreciable effect on the attenuation with depth of an air-induced pressure in a loose beach sand deposit, such as that found at Eniwetok Proving Grounds.

(3) Where the air-induced pressure predominates, the horizontal pressure is much less than the vertical. At the Eniwetok Proving Grounds, the ratio of these pressures was about 0.50 at all depths from the surface down to a few feet below the water table. Approximately the same value was found at the Nevada Test Site during Operation Plumbbob.

Where the horizontal water shock was predominant, the stress state in the soil was approximately hydrostatic, which was to be expected because undrained saturated soil behaves much like a liquid. No conclusions can be drawn regarding the stress state in a saturated soil deposit subjected to strictly air-induced pressure, because the horizontal water-transmitted pressure exceeded the air-induced pressure at depths where a hydrostatic pressure would be expected to exist under air-induced pressure loading.

(4) The flexibility of the diaphragms has a considerable effect on the pressures acting on them, whether they are located above or below the water table. When the overall compressibility of the drum is much greater than that of the soil it replaces, the pressure on the diaphragm is materially less than that in the soil surrounding the drum. This

difference can be more than 50 percent, and is almost completely developed in a depth of burial equal to the span of the drum.

(5) The results of the Hardtack test agree with the theory developed in the Plumbbob Project. However, this theory includes a number of simplifying assumptions and some fairly crude approximations. Further study is required to refine the analysis.

SUBSEQUENT TESTING: None

OPERATION: Hardtack

PROJECT: 3.2

STRUCTURE IDENTIFICATION: 3.2a, 3.2b, 3.2c, 3.2d

CROSS REFERENCE INDEX:
EARTH-COVERED AND SEMI-BURIED STEEL — Semi-Buried Corrugated Steel Arch Shell Structures

REPORT REFERENCES:
WT-1626
Defense Atomic Support Agency
Washington 25, D.C.

LOCATION: Helen, Irene (Bogairikk I.), and Yvonne (Runit)
Eniwetok Proving Grounds

OBJECTIVES:
To determine failure criteria of underground corrugated steel arches under long-duration, high-pressure loads.

STRUCTURAL DESCRIPTION:
Four corrugated steel, flexible, arch shell structures (3.2a, 3.2b, 3.2c, and 3.2d) with 5 feet of earth cover.

Structure 3.2d (1 gage) had a span of 38 feet and a length of 40 feet. The other three structures (10 gage) had spans of 25 feet and lengths of 48 feet.

STRUCTURAL DETAILS: (See Pages 190 and 191)

SOIL CHARACTERISTICS:
Coral sand — fine to coarse sand with some fine gravel.

PREVIOUS TESTING:
Similar structures were tested in Operation Upshot-Knothole, Project 3.15; Operation Teapot, Project 3.6; and Operation Plumbbob, Project 3.3. (See text pages 70, 95 and 127, respectively.)

STRUCTURAL DETAILS:

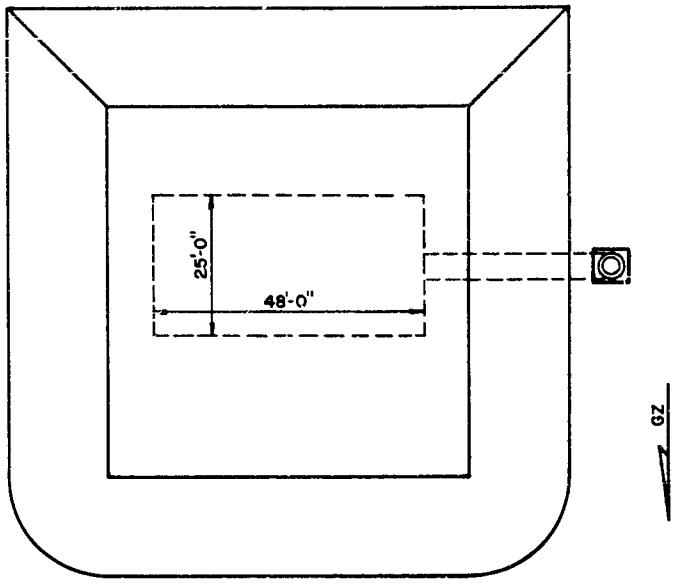

PLAN

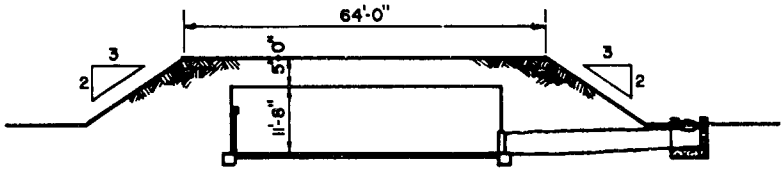

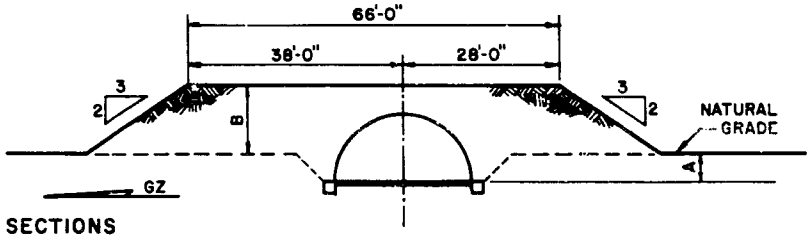

SECTIONS

3.2a, 3.2b, 3.2c — 25 foot span structures

	A	B
3.2a	5.0 feet	12.0 feet
3.2b	3.0 feet	14.0 feet
3.2c	1.5 feet	15.5 feet

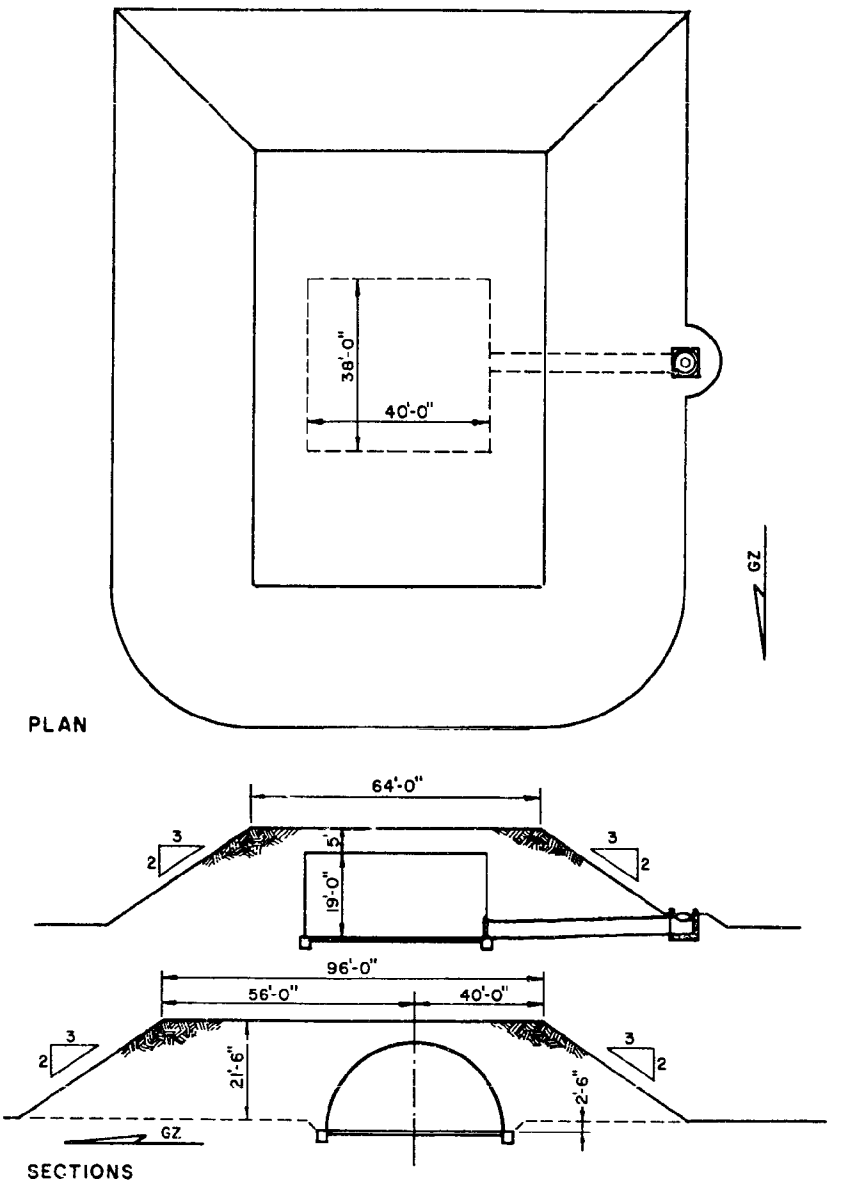

3.2d — 38 foot span structure

SHOT:
Structure 3.2a was tested in Shot "Cactus". The others were tested in Shot "Koa".

Name:	"Cactus"	"Koa"
Type:	Surface	Surface
Yield:	18 KT	1.3 MT
Height of Burst:	zero	zero
Date:	5 May 1958	12 May 1958

TEST LAYOUT:

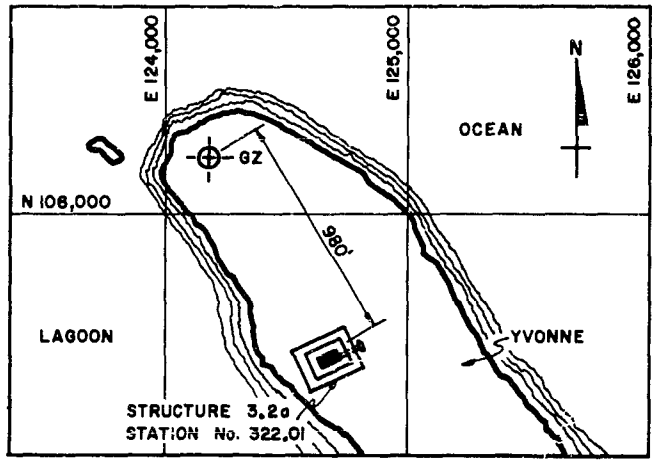

Site Plan — Shot "Cactus"

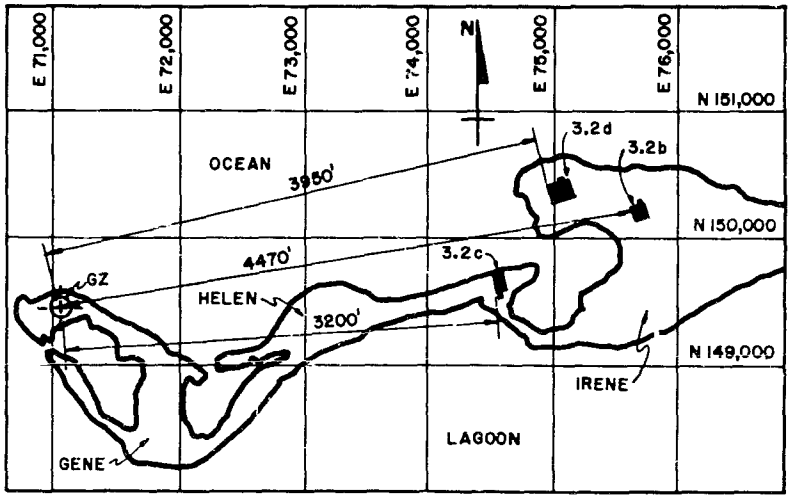

Site Plan — Shot "Koa"

LOADING:

	3.2a	3.2b	3.2c	3.2d
Peak Overpressure:	90 psi	78 psi	180 psi	100 psi
Duration:	0.40 sec	1.6 sec	1.2 sec	1.52 sec

SUMMARY:
Structure 3.2a collapsed on the side away from ground zero. The collapse apparently began with bearing failure of the shell plates at a bolted horizontal seam, approximately 5 feet above floor level on the collapsed side.

Structure 3.2b collapsed completely and filled with sand. The collapse appeared to be symmetrical about the crown.

Structure 3.2c collapsed completely, with the crown touching the floor of the structure.

Structure 3.2d collapsed completely and filled with sand. The collapse appeared to be symmetrical about the crown.

OTHER REMARKS:
The results of this experiment indicate that it is necessary to consider the response of a flexible structure basically as a soils-structural problem rather than a structural resistance problem. The related experiments in Nevada (Operation Plumbbob, Project 3.3) had different soil characteristics; therefore, they are very difficult to correlate. Considerable study is recommended to reach an understanding of flexible structure-soils interaction problems.

SUBSEQUENT TESTING: None

OPERATION: Hardtack

PROJECT: Test Support Station

STRUCTURE IDENTIFICATION: Station 1311

CROSS REFERENCE INDEX:
TEST SUPPORT STATIONS — Reinforced Concrete Earth Covered Shelter

REPORT REFERENCES:
WT-1631
Defense Atomic Support Agency
Washington 25, D.C.

LOCATION: Irene (Bogairikk I.) .
Eniwetok Proving Grounds

OBJECTIVES: (Non-experimental structure)
Structure used for test support purposes, thus only visual past shot inspections were made.

STRUCTURAL DESCRIPTION:
Semi-Buried reinforced concrete shelter with 5 feet of earth cover.

STRUCTURAL DETAILS: (See Page 195)

SOIL CHARACTERISTICS:
Coral sand — fine to coarse sand with some fine gravel.

PREVIOUS TESTING: None

SHOT:

Name:	"Koa"	"Yellowwood"	"Tobacco"	"Walnut"
Type:	Surface	Barge	Barge	Barge
Yield:	1.38 MT	340 KT	11.7 KT	1.45 MT
Height of Burst:	zero	zero	zero	zero
Date:	12 May 1958	26 May 1958	30 May 1958	14 June 1958

SHOT: (con't)

Name:	"Elder"	"Dogwood"	"Olive"	"Pine"
Type:	Barge	Barge	Barge	Barge
Yield:	940 KT	397 KT	202 KT	2.1 MT
Height of Burst:	zero	zero	zero	zero
Date:	27 June 1958	5 July 1958	22 July 1958	26 July 1958

STRUCTURAL DETAILS:

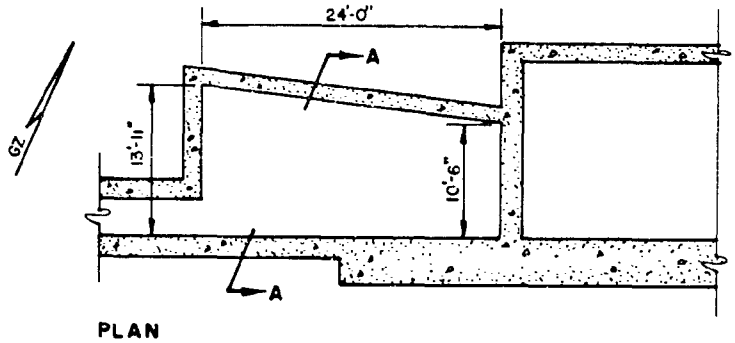

PLAN

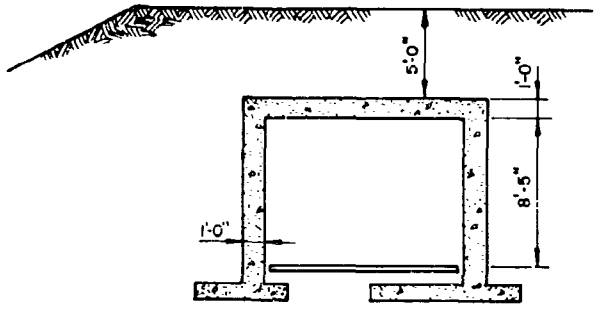

SECTION A-A

LOADING:

shot	range (feet)	peak overpressure (psi)	duration (sec)	floor slab acceleration (g)
"Koa"	5,290	42	1.85	6.0
"Yellowwood"	6,480	11	1.55	0.4
"Tobacco"	6,120	1.9	0.89	0
"Walnut"	6,480	28	1.98	3.5
"Elder"	6,120	23	1.80	2.3
"Dogwood"	6,120	13	1.55	0.6
"Olive"	6,120	9.5	1.38	0.2
"Pine"	7,670	27	2.30	3.5

SUMMARY:
The station was structurally damaged mainly from the effects of shots "Koa" and "Walnut". Shot "Koa" nearly filled the entrance with sand and the plain-concrete floor was badly cracked from both shots. The other shots caused no additional damage.

OTHER REMARKS:
Measurements of earth pressure and deflection were not made for this test station; hence, loading and response data was collected only for general information purposes.

SUBSEQUENT TESTING: None

OPERATION: Hardtack

PROJECT: Test Support Station

STRUCTURE IDENTIFICATION: Station 1314

CROSS REFERENCE INDEX:
TEST SUPPORT STATIONS — Massive Reinforced Concrete Semi-Buried Shelter

This is the same structure identified as Ivy 200; consequently, complete description and other data is included under Operation Ivy, Project 200. (See text page 44)

OPERATION: Hardtack

PROJECT: Test Support Station

STRUCTURE IDENTIFICATION: Station 1525

CROSS REFERENCE INDEX:
TEST SUPPORT STATIONS — Massive Reinforced Concrete Earth-Covered Shelter

REPORT REFERENCES:
WT-1631
Defense Atomic Support Agency
Washington 25, D.C.

LOCATION: Irene (Bogairikk I.)
Eniwetok Proving Grounds

OBJECTIVES: (Non-experimental structure)
Structure used for test support purposes, thus only visual past shot inspections were made.

STRUCTURAL DESCRIPTION:
Semi-buried massive reinforced concrete shelter with 5 feet of earth cover. One side with retaining wall was exposed.

STRUCTURAL DETAILS: (See Page 199)

SOIL CHARACTERISTICS:
Coral sand — fine to coarse sand with some fine gravel.

PREVIOUS TESTING: None

STRUCTURAL DETAILS:

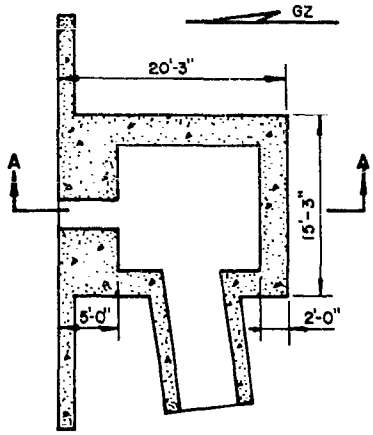

PLAN

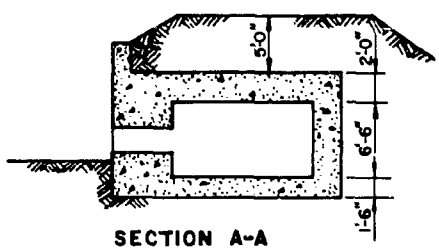

SECTION A-A

SHOT:

Name:	"Koa"	"Yellowwood"	"Tobacco"	"Walnut"
Type:	Surface	Barge	Barge	Barge
Yield:	1.38 MT	340 KT	11.7 KT	1.45 MT
Height of Burst:	zero	zero	zero	zero
Date:	12 May 1958	26 May 1958	30 May 1958	14 June 1958

Name:	"Elder"	"Dogwood"	"Olive"	"Pine"
Type:	Barge	Barge	Barge	Barge
Yield:	940 KT	397 KT	202 KT	2.1 MT
Height of Burst:	zero	zero	zero	zero
Date:	27 June 1958	5 July 1958	22 July 1958	26 July 1958

LOADING:

shot	range (feet)	peak overpressure (psi)	duration (sec)	floor slab acceleration (g)
"Koa"	5,300	42	1.85	6.9
"Yellowwood"	6,700	11	1.57	0.4
"Tobacco"	6,340	1.8	0.91	0
"Walnut"	6,700	27	2.00	3.2
"Elder"	6,340	22	1.82	2.0
"Dogwood"	6,340	14	1.57	0.6
"Olive"	6,340	9	1.40	0.2
"Pine"	7,890	26	2.32	3.2

SUMMARY:
The only damage incident to the structure occurred during shots "Koa" and "Walnut". The retaining wall integral with the front wall was severely damaged by the face-on air blast from shot "Koa", and one end of it was later destroyed by shot "Walnut".

OTHER REMARKS:
Measurements of earth pressure and deflection were not made for this test station; hence, loading and response data was collected only for general information purposes.

SUBSEQUENT TESTING: None

OPERATION: Hardtack

PROJECT: Test Support Station

STRUCTURE IDENTIFICATION: Station 1526

CROSS REFERENCE INDEX:
TEST SUPPORT STATIONS — Massive Reinforced Concrete Earth-Covered Shelter

REPORT REFERENCES:
WT-1631
Defense Atomic Support Agency
Washington 25, D.C.

LOCATION: Irene (Bogairikk I.)
Eniwetok Proving Grounds

OBJECTIVES: (Non-experimental structure)
Structure used for test support purposes, thus only visual past shot inspections were made.

STRUCTURAL DESCRIPTION:
Semi-buried massive reinforced concrete shelter with 5 feet of earth cover.

STRUCTURAL DETAILS: (See Page 202)

SOIL CHARACTERISTICS:
Coral sand — fine to coarse sand with some fine gravel.

PREVIOUS TESTING: None

SHOT:

Name:	"Koa"	"Yellowwood"	"Tobacco"	"Walnut"
Type:	Surface	Barge	Barge	Barge
Yield:	1.38 MT	340 KT	11.7 KT	1.45 MT
Height of Burst:	zero	zero	zero	zero
Date:	12 May 1958	26 May 1958	30 May 1958	14 June 1958

SHOT: (con't)

Name:	"Elder"	"Dogwood"	"Olive"	"Pine"
Type:	Barge	Barge	Barge	Barge
Yield:	940 KT	397 KT	202 KT	2.1 MT
Height of Burst:	zero	zero	zero	zero
Date:	27 June 1958	5 July 1958	22 July 1958	26 July 1958

STRUCTURAL DETAILS:

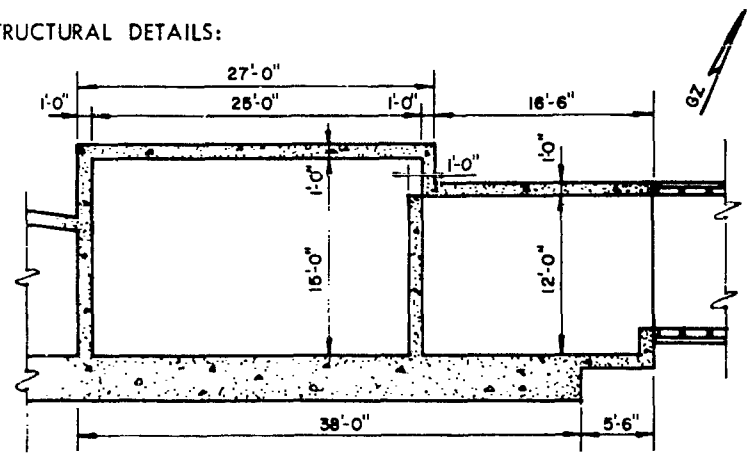

PLAN

LOADING:

shot	range (feet)	peak overpressure (psi)	duration (sec)	floor slab acceleration (g)
"Koa"	5,360	42	1.85	6.7
"Yellowwood"	6,510	11.5	1.55	0.4
"Tobacco"	6,140	1.9	0.89	0
"Walnut"	6,510	28	1.98	3.6
"Elder"	6,140	23	1.80	2.3
"Dogwood"	6,140	13	1.55	0.7
"Olive"	6,140	9.5	1.38	0.2
"Pine"	7,720	28	2.30	3.3

SUMMARY:
The station received no damage from any of the tests.

OTHER REMARKS:
Measurements of earth pressure and deflection were not made for this test station; hence, loading and response data was collected only for general information pruposes.

SUBSEQUENT TESTING: None

PART 2

Discussion and Correlation of Tests

Part 2 contains a series of charts designed to show quickly and graphically the relation between similar tests, and are so arranged that positive trends in structural response become apparent. A general discussion and recommendations are presented.

CORRELATION OF TEST RESULTS

The following material will concern itself with correlating the information obtained from the weapons tests, and comparing the dynamic response of the structures involved. The correlation will be presented in two parts: (1) by charts showing the pertinent test data and significant results, and (2) by a general discussion of structural response characteristics.

Unfortunately, the discussion will be limited. Due in part to the exploratory nature of many of the tests, the restricted scope of the project goals, and the erratic nature of explosion phenomena and resulting data, much of the information does not permit correlation. As a result, only general conclusions can be drawn. It is hoped that future investigations will allow specific, detailed comments.

The charts, which follow, are designed to show the reader quickly and graphically the relation between similar tests, and data are so arranged that positive trends in structural response become apparent. As it is impossible to record all available data on these charts, the reader is referred by page number to the more complete test description in Part 1 of this report, and if then necessary, to the original work.

LIST OF CHARTS

The following is a list of the charts in order of presentation:

1. Buried Corrugated-Steel, Cattlepass Pipe Sections, Shown as a Function of Depth of Burial.
2. Buried, Circular, Corrugated Steel Pipe Sections, Shown as a Function of Decreasing Overpressure.
3. Circular, Reinforced Precast and Monolithic Concrete Pipe Sections Shown as a Function of Overpressure.
4. Steel and Concrete Pipe Sections at Constant Depth of Burial, Shown as a Function of Overpressure.
5. Earth-covered, Flexible, Corrugated Steel Arch Shelters.
6. Buried, Semi-Buried and Flexible Corrugated Steel Arch Shelters.
7. Comparison of Earth-covered Steel to Buried Steel Arch Shelters.
8. Buried Reinforced Concrete Arch Shelters
9. Buried, Reinforced Concrete Rectangular Shelters in Operation Plumbbob.
10. Other Buried Reinforced Concrete Shelters of Rectangular Construction

DEFINITIONS

In reading the charts, the following symbols are used and here defined:

* indicates a value estimated by the writers of this report.

— is used to indicate that the value or situation is the same as the one shown to the left of the arrow.

Earth-covered Structures: Structures founded at the original ground surface and covered with earth to provide a layer which closely approximates the shape of the structure itself. Such structures are drag loaded as well as loaded by overpressure.

Semiburied Structures: Structures covered with earth such that the horizontal top surface of the berm extends past the sides of the structure to a distance equal to or greater than the height of the structure plus the crown cover. The crown cover is seldom greater than the half height of the structure. Drag loading is essentially eliminated, but little attenuation of overpressure is experienced.

Buried Structures: Structures buried at a depth such that arch action of the soil is expected. Arch action has not been experienced for depths of burial less than the least horizontal dimension of the structure.

p_{so} is defined as the static peak overpressure in the shock front.

q is defined as the peak value of wind pressure in the shock front. This value is omitted in many of the charts as it was not specified in the original reference.

HOB is the abbreviation used for Height of Burst.

CORRELATION CHART

Category	Buried Corrugated-Steel, Cattlepass Pipe Sections, Shown as a Function of Depth of I			
Structure	Steel Cattle-pass 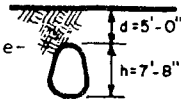	←	d = 7'-6" h = 7'-8"	
Operation (Structure/ref. page)	Plumbbob (3.2f / pp 121)	(3.2m / ←)	(3.2a / ←)	(3.2c /
Detonation (Yield / HOB)	36.6KT / 700'	←	←	
Distance from ground zero	1040'	1360'	970'	1040'
P_{so}/q in psi	126 psi /	60 psi /	149 psi /	126 psi /
Positive Phase	0.206 sec.	0.361 sec.	0.232 sec.	0.206 sec
Structural Response Mode	Symmetrical compression and flexural modes.	←	←	←
Significant Structural Damage and Additional Comments	. Flat bottom deflected inward slightly. . Slight circumferential shortening due to mechanical takeup in bolted seams. No . other visual damage to buried sections. . More apparent damage than to Plumbbob 3.2a although subjected to lower pressure. Depth of burial is a significant factor.	. Minor circumferential shortening. . No other visual damage to buried sections.	. Minor circumferential shortening. . Change in internal height was 1%. . No other visual damage to buried sections. . All cattlepass sections buried more than 5' behaved essentially the same. Note that the span of these structures is 5'-10".	. Change i height le half of o of the ori height.

1

pass Pipe Sections, Shown as a Function of Depth of Burial.

←	d = 7'-6" h = 7'-8"	←	←	←	d = 10'-0" h = 7'-8"
←)	(3.2a / ←)	(3.2c / ←)	(3.2g / ←)	(3.2k / ←)	(3.2b / ←)
←	←	←	←	←	←
	970'	1040'	1150'	1360'	1040'
	149 psi /	126 psi /	100 psi /	60 psi	126 psi
.	0.232 sec.	0.206 sec.	0.333 sec.	0.361 sec.	0.206 sec.
←	←	←	←	←	←
rcumferential ng. visual damage sections.	. Minor circumferential shortening. . Change in internal height was 1%. . No other visual damage to buried sections.	. Change in internal height less than half of one per cent of the original height.	←	←	. Change in internal height approx. 3/4 of one per cent of the original height.
	. All cattlepass sections buried more than 5' behaved essentially the same. Note that the span of these structures is 5'-10".	←	←	←	←

2

CORRELATION CHART

Category	Buried, Circular, Corrugated Steel Pipe Sections, Shown as a Function of Decreasing			
Structure	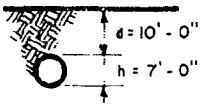	←	d = 7'-6"	←
Operation (Structure/ref. page)	Plumbbob (34.3-01 / pp 171)	← (34.3-02 / pp 171)	← (3.2d / pp 121)	← (3.2h /
Detonation (Yield / HOB)	44 KT / 700'	←	36.6 KT / 700'	←
Distance from ground zero	825'	900'	1040'	1150'
P_{so}/q in psi	245 /	140 /	126 /	100 /
Positive Phase	0.154 sec.	0.160 sec.	0.206 sec.	0.333 se
Structural Response Mode	Unsymmetrical flexure.	←	Symmetrical compression and flexure (flattening).	←
Significant Structural Damage and Additional Comments	.No significant damage occurred. .Structure was apparently loaded to a small percentage of its capacity. .Major portions of the blast load were carried by the soil by arching. (Notice depth of burial compared to span.) .More bolts were used in each 34.3 structure connection in an attempt to minimize the mechanical slippage noted in the joints of 3.2 structures. Double rows of bolts were used (3.2 structures used single rows). No joint slippage in 34.3 structures was noted. .34.3 structures were tested at Yucca Flats under natural soil conditions. .Residual deformations were a large percentage of the transient deformations although the latter were small. Progressive failure under repeated loads is suggested as a result.		.No significant damage occurred. .Minor slippage in bolted, lap splices occurred. .3.2 structures were tested at Frenchman's Flats using special (imported) backfill to typify more standard North American soils. .Residual deformations were roughly half of the transient deformations.	←

1

l Steel Pipe Sections, Shown as a Function of Decreasing Overpressure.			
←	d = 7'-6"	←	
← 02 / pp 171)	← (3.2d / pp 121)	← (3.2h / pp 121)	
←	36.6 KT / 700'	←	
	1040'	1150'	
	126 /	100 /	
sec.	0.206 sec.	0.333 sec.	
←	Symmetrical compression and flexure (flattening).	←	
o a small per- ere carried by th of burial 3 structure nize the joints of 3.2 were used (3.2 joint slippage cca Flats under e percentage of h the latter nder repeated	.No significant damage occurred. .Minor slippage in bolted, lap splices occurred. .3.2 structures were tested at Frenchman's Flats using special (imported) backfill to typify more standard North American soils. .Residual deformations were roughly half of the transient deformations.	← ← ←	2

CORRELATION CHART

Category	Circular, Reinforced Precast and Monolithic Concrete Pipe Sections Shown as a Fur			
Structure	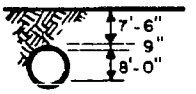 Standard concrete sewer pipes without elliptical reinforcement.	←	←	Prec
Operation (Structure/ref. page)	Plumbbob (3.2e / pp 121)	← (3.2j / ←)	← (3.2 l / ←)	(30. (Fre
Detoration (Yield / HOB)	36.6 KT/ SB / 700'	←	←	43.8
Distance from ground zero	1040'	1150'	1360'	900'
P_{so}/q in psi	126 /	100 /	60 /	160
Positive Phase	0.206 sec.	0.333 sec.	0.361 sec.	0.2
Structural Response Mode	Symmetrical flattening, flexural mode.	←	←	Uns flex
Significant Structural Damage and Additional Comments	. Internal longitudinal cracks at ceiling and in center of floor. 1/4" floor crack, 1/32" cracks in ceiling. . Special backfill was used to typify std. soils. Good compaction, hence little flexural deformation. . 5' diam., 8 gage corrugated steel pipe entrance section showed no damage on visual inspection. . Dimensional changes were less than 1%. . Residual deformations were roughly half of the transient deformations.	. Internal longitudinal cracks of 1/32" width in ceiling and floor. ← ← ← ←	← ← ← ← ← . Structure 3.21 at 60 psi responded in almost the same manner and to the same degree as 3.2j at 100 psi.	. Min bur entr crac to p . Win ion of e . No Entr indi wall war . This has loo man for pipe

1

and Monolithic Concrete Pipe Sections Shown as a Function of Overpressure.

←	←	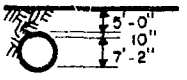	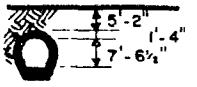	←	
vithout elliptical reinforcement.		Precast rings	Monolithic construction		
← / ←)	← (3.2 I / ←)	(30.6 II-2 / pp 149) (French Shelter)	(30.7 CAa / pp 165) (German Shelter)	(30.7 CAb / pp 165) (German Shelter)	
←	←	43.8 KT / 700'	←	←	
	1360'	900'	←	1000'	
/	60 /	160/320	160/320	115/280	
3 sec.	0.361 sec.	0.24 sec.	←	0.26 sec.	
←	←	Unsymmetrical flexural mode	Symmetrical flexural mode	←	
rnal longitudinal ks of 1/32" h in ceiling and r.	←	. Minor damage to buried monolithic entryway, extensive cracking and spalling to precast rings.	. Minor damage except to exposed emergency exit hatch.	←	
←	←	. Wind and missile erosion to exposed parts of entry.	. Minor, symmetrical, longitudinal cracks in floor and ceiling.	←	
←	←	. No impending collapse. Entryway crack patterns indicate that the entry walls were forced outward into the soil.	. Minor, center-span crack running up the stair at the entryway (rect. const.)	←	
←	←	. This site (Yucca Flats) has characteristically looser soil than Frenchman's Flats, the site for the concrete sewer pipes shown to the left.	. Wind and missile erosion to exposed parts of entry.	←	
←	←		←	←	2
	. Structure 3.21 at 60 psi responded in almost the same manner and to the same degree as 3.2j at 100 psi.				

CORRELATION CHART

Category	Steel and Concrete Pipe Sections at Constant Depth of Burial Shown as a Function o			
Structure	Concrete Pipe 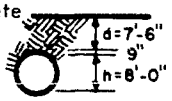	Circular Steel Pipe d = 7'-6' h = 7'-0"	Steel Cattle-Pass d= 7'-6' h= 7'-8"	Con
Operation (Structure/ref. page)	Plumbbob (3.2e / pp 121)	← (3.2d / ←)	← (3.2c / ←)	(3.
Detonation (Yield / HOB)	36.6 KT / SB / 700'	←	←	
Distance from ground zero	1040'	←	←	115
P_{so}/q in psi	126 /	←	←	100
Positive Phase	0.206 sec.	←	←	0.3
Structural Response Mode	Symmetrical compression and Flexural Mode (flattening)	←	←	
Significant Structural Damage and Additional Comments	.Internal longitudinal cracks at ceiling and in center of floor; 1/4" floor crack, 1/32" cracks in ceiling. .Special backfill and good compaction was used, hence, little flexural deformation. .Dimensional changes were less than 1%. .Residual deformations were roughly half of the transient deformations.	None ←	.Change in height was less than half of one percent. .No significant structural damage. ←	.Inte long crac ceil .Spe used stan hen defo .Dim were .Resi were the mati

General Comments

Steel sections were subject to arch shortening to a degree not appreciably greater than the concrete sections.

The concrete pipes, except at the 100 psi locations, did not exhibit appreciably greater stiffness than the steel sections. At this depth of burial, it would be expected that membrane action (symmetrical compression) would be most effective in resisting load. Concrete exhibits flexural damage more graphically than steel at these flexural levels.

1

Constant Depth of Burial Shown as a Function of Overpressure.

'-6" '-0"	Steel Cattle- Pass d= 7'-6" h= 7'-8"	Concrete d = 7'-6" h = 8'-0"	Circular Steel d = 7'-6" h = 7'-0"	Cattle- pass d = 7'-6" h = 7'-8"	Concrete d = 7'-6" h = 8'-0"	
-)	← (3.2c / ←)	← (3.2j / ←)	← (3.2h / ←)	← (3.2g / ←)	← (3.2 l/ ←)	No cir pipes this ra
-	←	←	←	←	←	
-	←	1150'	←	←	1360'	
-	←	100 /	←	←	60 /	
-	←	0.333 sec.	←	←	0.361sec.	
-	←	←	←	←	←	
— —	.Change in height was less than half of one percent. .No signiticant structural damage. ←	.Internal, symmetrical longitudinal, 1/32" cracks in floor and ceiling. .Special backfill was used to typify the standard conditions, hence, little flexural deformation occurred. .Dimensional changes were less than 1%. .Residual deformations were roughly half of the transient deformations.	.None	.Dimensional changes were less than 1/2%	.Internal symmetrical, longitudinal, 1/32" cracks in floor and ceiling. .Special backfill was used to typify the standard conditions, hence, little flexural deformation occurred. .Dimensional changes were less than 1%. .Residual deformations were roughly half of the transient deformations. .This structure at 60 psi responded in almost the same manner and to the same degree as 3.2j at 100 psi.	

tening to a degree not appreciably

psi locations, did not exhibit appre- ctions. At this depth of burial, it n (symmetrical compression) would ncrete exhibits flexural damage more levels.

2

d = 7'-6" h = 7'-8"	Concrete d = 7'-6" h = 8'-0"		Cattle-pass d = 7'-6" h = 7'-8"	
← / ←)	← (3.2 l/ ←)	No circular Steel pipes were tested at this range.	Plumbbob (3.2k / pp 121)	
←	←		←	
←	1360'		←	
←	60 /		←	
←	0.361sec.		←	
←	←		←	
onal changes ss than 1/2%	. Internal symmetrical, longitudinal, 1/32" cracks in floor and ceiling . Special backfill was used to typify the standard conditions, hence, little flexural deformation occurred. . Dimensional changes were less than 1%. . Residual deformations were roughly half of the transient deformations. . This structure at 60 psi responded in almost the same manner and to the same degree as 3.2j at 100 psi.		.Dimensional changes were less than 1/2%. .No significant structural damage.	3

CORRELATION CHART

Category	Earth-covered, Flexible, Corrugated Steel Arch Shelters.			
Structure	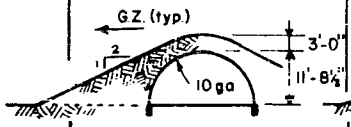	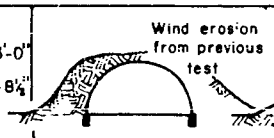	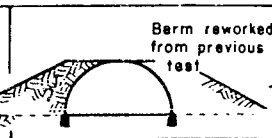	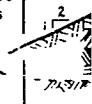
Operation (Structure/ref. page)	Upshot-Knothole (3.15 / pp 70)	Upshot-Knothole same structure as 3.15	Teapot - Same structure as U-K 3.15	Tea (3.
Detonation (Yield / HOB)	26.5 KT / AB / 2425' (May 8, 1953)	14.9 KT / SB / 524' (May 25, 1953)	22.0 KT / SB / 400'	
Distance from ground zero	2700'	2280'	2300'	15
Pso/q in psi	10.8 / 4	3.1 / 7 with 4 psi precursor	11 / 30	30
Positive Phase	0.700 sec.	0.400 sec.		
Structural Response Mode	Asymmetrical flexure	Little information is available due to loss of deflection gages.	Asymmetrical flexure	
Significant Structural Damage and Additional Comments	. Arch remained elastic but end walls deflected inward extensively. . Minor arch contraction occurred due to joint slippage. . Building responded with one major lurch and rebound followed by trivial, damped oscillations. . End walls were weakest part. . Structures of this type will probably withstand overpressures of 30 to 35 psi. . Deflections approximated damped harmonic motion. . High leeward soil pressures suggest high passive pressures.	. Crown deflected upward (transient and residual), completely elastic arch response. ←	. Trivial deflections.	. Co col sid flo ure lar . Th ze wh ac pre 50 . For on tur be be sho cor dec sho . Soi hei

1

Steel Arch Shelters.

sion vious	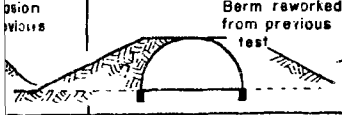	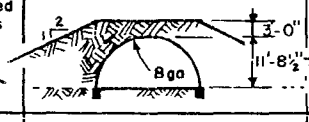	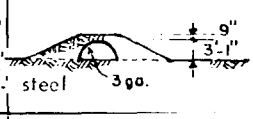 steel	← steel	← steel	← glorifier
3.15	Teapot - Same structure as U-K 3.15	Teapot (3.6 / pp 95)	Teapot 3.6 (Model No. 1)	← (Model No. 2)	← (Model No. 3)	← (Model N
24'	22.0 KT / 53 / 400'	←	←	←	←	←
	2300'	1500'	1400'	1500'	2000'	2000'
	11 / 30	30 / 170	35 / 200	30 / 180	19 / 64	19 64
is loss es.	Asymmetrical flexure	←	←	←	←	←
up- nd tely nse.	.Trivial deflections.	.Complete asymmetrical collapse with windward side of arch touching floor. Dynamic pressures were considerably larger than predicted. .The lee gages recorded zero total pressure which seems to be characteristic of drag pressures greater than 50 psi. .For extreme drag loads on drag sensitive structures, the height should be decreased, soil should be compacted, berm should be widened, corrugation should be deepened, steel gages should be increased. .Soil was compacted to height of 8' only.	.Collapsed .Backfill on all models was not compacted.	.Collapsed, partially due to water inundation from burst tank. .This model was designed to have stresses identical to those of the full scale structure (3.6) at the same range.	.Withstood the blast loads but underwent extensive crown deflections. .This model withstood dynamic deflections of more than 4 times the value at which statically loaded laboratory models failed. .Residual deflection was 15% of the height.	.Collapse Analysis tion (exc 0.25q.

←	← steel	← aluminum	← aluminum	← aluminum	
— No. 2)	← (Model No. 3)	← (Model No. 4)	← (Model No. 5)	← (Model No. 6)	
←	←	←	←	←	
	2000'	2000'	2500'	3000'	
180	19 / 64	19 / 64	9 / 14	8 / 2	
←	←	←	←	←	
sed, partially water inunda- om burst tank.	.Withstood the blast loads but underwent extensive crown deflections.	.Collapsed	.Withstood large deflections. .Residual deflection was 4% of height.	.Little significant damage .Residual deflections less than 1 1/2% of the height.	
odel was designed e stresses identi- those of the full ructure (3.6) some range.	.This model withstood dynamic deflections of more than 4 times the value at which statically loaded laboratory models failed. .Residual deflection was 15% of the height.	Analysis of the models which did not collapse indicates that the deflection (excursion of the crown) is more a direct function of q than p + 0.25q.			
mpacted.	←	←	←	←	

CORRELATION CHART

Category	Buried, Semi-Buried and Flexible Corrugated Steel Arch Shelters.			
Structure	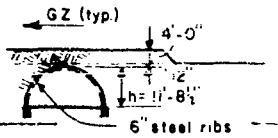	←	Same as structure 3.3a and b but without the steel ribs.	
Operation (Structure/ref. page)	Plumbbob (3.3a / pp 127)	← (3.3a / ←)	← (3.3b ←)	
Detonation (Yield HOB)	36.6 KT 58 700'	←	←	
Distance from ground zero	1150'	1360'	←	
P_{so}/q in psi	100 360	53 300	55 300	
Positive Phase	0.333 sec.	0.351 sec.	←	
Structural Response Mode	Symmetrical compression and flexure (flattening)	←	←	
Significant Structural Damage and Additional Comments	. Minor cracking occurred in the floor slab due to frictional drag from the downward moving footings. . Joint slippage in the bolted connections of the arch was from 1/8" to 3/8" each joint. . Average footing displacement was less than 3" downward.	. The floor slab did not crack. . Joint slippage was less than 1/8" each joint. . Average footing displacement was less than 1 1/2" downward.	. No significant structural damage. . The footings displaced the same amount as structure 3.3a.	

General Comment

1. The soil at the Plumbbob site (special imported backfill) was considerably better than the coral beach sand used for the Hardtack structures shown to the right. In addition, the durations of positive phase were markedly different. For these reasons, care should be used in comparing their structural response characteristics.

1

lexible Corrugated Steel Arch Shelters.

← —	Same as structure 3.3a and b but without the steel ribs.	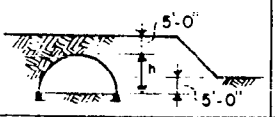	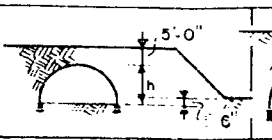	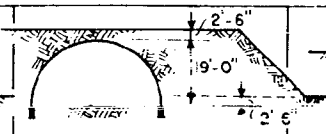	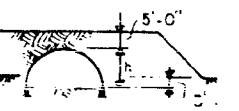
← (3c / ←)	← (3.3b / ←)	Hardtack (3.2a / pp 189)	← (3.2c / ←)	← (3.2d / ←)	← (3.2b / ←)
←	←	18 KT / zero	1/3 MT / CSB / zero	←	←
0'	←	980'	3200'	3950'	4470'
/ 300	56 / 300	90 /	180 /	100 /	78 /
61 sec.	←	0.40 sec.	1.2 sec.	1.52 sec.	1.6 sec.
←	←	Shearing failure followed by flexure	Symmetrical flexural failure with localized shearing failures	Symmetrical flexural failure	←
floor slab did not k. t dipper was less 1.8" arch joint. ar footing displacement was less 1 1/2" downward.	. No significant structural damage. . The footings displaced the same amount as structure 3.3a.	. Collapse was initiated by failure in bearing at bolted seam approx. 5' above the floor line on the lee side. This was followed by complete flexural collapse. General Comments on Operation Hardtack 1. The extent of the damage was directly proportional to the duration of the positive phase. 2. No evidence of drag loading was found. 3. The coral beach sand used in backfilling the structures had deficient properties in density, cohesion, shear strength, and compactability when compared to soils found in normal situations. 4. The Hardtack structures had dirt floors.	. Complete symmetrical flexural collapse with crown moving downward, haunches outward.	. Complete, symmetrical flexural collapse with crown moving upward, haunches inward. . Arch sheets at support tore away from the foundation by pushing outward. No other evidence of localized failure in bolted connections was found. . Failure of the end walls effected the strength of the arch to an unknown degree. . Pre-test backfilling operation forced crown up 8" (6%) and haunches inward 6" (4%). . Crown had insufficient cover to provide membrane action.	. Same as 3.2c (Complete collapse).
te (special imported backfill) was coral beach sand used for the Hardtack structures. In addition, the durations of positive phase [illegible] care should be used in [illegible] characteristics.					

2

CORRELATION CHART

Category	Comparison of Earth-covered Steel to Buried Steel Arch Shelters.		
Structure	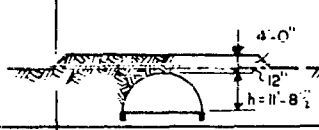	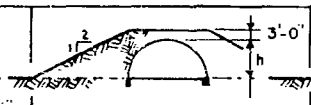	
Operation (Structure/ref. page)	Plumbbob (3.3b / pp 127)	Teapot (3.6 / pp 95)	Upshot-Knothole (3.15 / pp 70)
Detonation (Yield / HOB)	36.6 KT / 700'	22.0 KT / 400'	26.5 KT / AB / 2425'
Distance from ground zero	1360'	1500'	2700'
$P_{so/q}$ in psi	56 / 300	30 / 170	10.8 / 4
Positive Phase	0.361 sec.		0.700 sec.
Structural Response Mode	Symmetrical compression and flexure (flattening)	Asymmetrical flexure	Asymmetrical with one major lurch and rebound followed by trivial, damped oscillations.
Significant Structural Damage and Additional Comments	. No significant structural damage. . Joint slippage was less than 1/8" each joint. . Average footing displacement was less than 1 1/2" downward. . Backfill was well compacted.	. Complete asymmetrical collapse with the windward side of the arch touching the floor. Dynamic pressures were considerably larger than predicted. . The backfill was well compacted.	. Arch remained elastic but end walls deflected inward extensively. . End walls were weakest part. . Structures of this type will probably withstand overpressures of 30 to 40 psi. . Deflections approximated damped harmonic motion. . High leeward soil pressures suggest high passive pressures.

CORRELATION CHART

Category	Buried Reinforced Concrete Arch Shelters.			
Structure	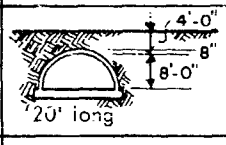	←	←	
Operation (Structure/ref. page)	Plumbbob (3.1c / pp 118)	← (3.1b / ←)	← (3.1a / ←)	(
Detonation (Yield / HOB)	36.6 KT / 700'	←	←	
Distance from ground zero	960'	1040'	1360'	
P_{so}/q in psi	199 /	124 /	56 /	
Positive Phase		0.206 sec.	0.361 sec.	
Structural Response Mode	Compression and and appreciable asymmetrical flexure.	←	←	
Significant Structural Damage and Additional Comments	. Obvious diagonal cracks occurred in the floor slab. Cracks occurred on the inner surface of the arch at the third points. . High accelerations of the monolithic floor slab may be psychologically objectionable. . Structure was adequate as a personnel shelter at 200 psi overpressure.	← ← ←	. Instrumentation proved that plane sections remained plane. . Accelerations of the floor slab were minor. . Minor cracking occurred but in a pattern roughly similar to 3.1b, c.	. Cr cr . Be co Ge 5. 6. 7. 8.

General Comments

1. Deflections were small but directly proportional to the magnitude of overpressure.
2. Backfill was fully compacted.
3. Transient earth pressures at some points exceeded free field overpressures at the ground surface, probably due to reflected and passive pressures in the soil.
4. Conventional blast design procedure gave conservative results.

1

←	←	← 32' long			
← b / ←)	← (3.1a / ←)	← (3.1n / ←)			
←	←	←			
)'	1360'	←			
/	56	←			
36 sec.	0.361 sec.	←			
←	←	←			
←	. Instrumentation proved that plane sections remained plane. . Accelerations of the floor slab were minor. . Minor cracking occurred but in a pattern roughly similar to 3.1b, c.	←			
←					
←					
directly proportional to the magnitude of ed. some points exceeded free field overpressures ably due to reflected and passive pressures in procedure gave conservative results.		. Cracking was more extensive than in 3.1a with arch cracks at crown rather than 3rd points. . Bending is still significant, casting doubt on the validity of the common design assumption of zero bending. General Comments (continued) 5. As structures were almost square in plan, the end conditions greatly affected arch action. Structure 3.1n was designed to evaluate this effect, and indicated that the end effects extended inward a distance of approximately 1 1/2 times the radius. 6. The vertical reactions at the springline equaled the peak overpressure at ground surface times half the plan area of the arch. 7. Probable location of failure would be at the springing line due to large moments and thrusts. 8. The residual deflections were roughly half of the transient deflections.			2

CORRELATION CHART

Category	Buried, Reinforced Concrete Rectangular Shelters in Operation Plumbbob.			
Structure	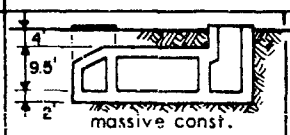	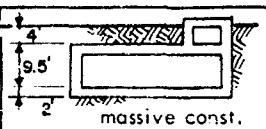	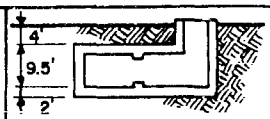	
Operation (Structure/ref. page)	Plumbbob (30.7 RAa / pp 157)	← (30.6 II-1 / pp 147)	← (30.6 II-3 / pp 151)	(30.
Detonation (Yield / HOB)	43.8 KT / 700'	←	←	
Distance from ground zero	840'	900'	←	
P_{so}/q	190 /	160 /	←	
Positive Phase	0.11 sec.	0.24 sec.	←	
Structural Response Mode	Flexural	←	←	
Significant Structural Damage and Additional Comments	.Minor cracking in buried portions, major damage to entrance way, the entry way walls being pushed back into the fill. .Extensive cracking and spalling occurred at the middle of spans and at re-entrant corners.	.Minor cracks in unexposed portions.	←	.M in pc bc

General Notes on 30.7 Structures

1. All exposed portions exhibited from extensive to mild wind erosion and missile scouring.
2. Shelters and ground exhibited similar accelerations and translations, with some tendency for the entry stairways to separate from the shelter structure.
3. Standard blast design procedures predict the structural action with reasonable accuracy, using actual strengths of materials and as-built construction details.

ctangular Shelters in Operation Plumbbob.

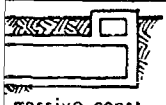 massive const.	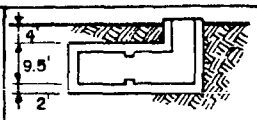	←	←	Same as 30.7RAa (first column)	←	
← -1 / pp 147)	← (30.6 II-3 / pp 151)	← (30.6 II-4 / pp 153)	← (30.6 II-5 / pp 155)	← (30.7 RAb / pp 159)	← (30.7 RAc / pp 161)	(
←	←	←	←	←	←	
	←	←	1000'	←	←	
	←	←	115 /	←	←	
.	←	←	0.26 sec.	←	←	
←	←	←	←	←	←	
cracks in sed portions.	←	.Minor cracking in buried portions, entrance badly damaged.	.Very minor damage in buried portions.	.1/32" cracks in floor minor wall and roof cracks, major entrance-way damage though appreciably less than 30.7 RAa (first column).	.Hair line cracks in main structure, ex-tensive entranceway cracks at re-entrant corners.	.

from extensive to mild wind erosion and

imilar accelerations and translations,
ry stairways to separate from the shelter

es predict the structural action with
ual strengths of materials and as-built

2

as 30.7RAa column)	←	←	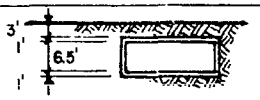		
← Ab / pp 159)	← (30.7 RAc / pp 161)	← (30.7 RAd / pp 163)	← (30.7 RCa / pp 169)		
←	←	←	←		
←	←	1176'	1170'		
←	←	82 /	27 /		
←	←	.30 approx.	.48 approx.		
←	←	←	←		
cracks in floor wall and roof , major entrance-mage though ably less than Ao (first column).	. Hair line cracks in main structure, extensive entranceway cracks at re-entrant corners.	. No damage to shelter, slight entranceway damage.	. Minor cracks well distributed. . No significant damage.	3	

CORRELATION CHART

Category	Other Buried Reinforced Concrete Shelters of Rectangular Construction.			
Structure	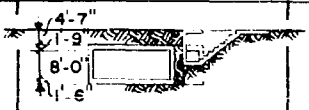	←	←	W
Operation (Structure/ref. page)	Teapot (34.3a-2 / pp 100)	(34.3b-2 / ←)	(34.3a-1 ←)	(3
Detonation (Yield / HOB)	28.5 KT / AB / 500'	←	14.2 KT / AB / 500'	
Distance from ground zero	1050'	←	←	
P_{so}/q in psi	91.9 /	←	47 /	
Positive Phase				
Structural Response Mode	Unknown due to lack of instrumentation, and significant distortion.	←	←	
Significant Structural Damage and Additional Comments	. No significant structural damage. . Considerable dirt and debris littered the stair wells. . Retaining wall around entry was damaged. . Vent pipes were torn off. . Maximum vertical acceleration of floor slab (3.7g) was much less than predicted.		← ← . All exposed ventilation vents (pipes) were bent away from G.Z.	. C T a

crete Shelters of Rectangular Construction.

←	←	← With concrete interior partition	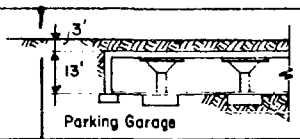		
b-2 ←)	(34.3a-1 ←)	(34.3b-1 / ←)	Plumbbob (30.2 / pp 141)		
←	14.2 KT / AB 500'	←	36.6KT / AB / 700'		
←	←	←			
←	47	←	42 /		
←	←	←			
o. ← ered the stair wells ← damaged. .All exposed ventilation vents (pipes) were bent away from G.Z. of floor slab (3.7g)		.Considerable distortion to the door frame in the concrete partition. ←	.Retaining wall at entrance ramp was extensively damaged, partially due to inadequate soil compaction and high reflected overpressure loading. .No other structural damage occurred. .Ramp side-wall was moderately cracked with some indication of bond failure. .Structure was more than adequate to resist the loads applied. .The strength of normal lap splices in concrete reinf. may be much lower under high loading rates than under static loads. .Concrete ductility would be enhanced by welding or elimination of reinforcement splices. .Natural soil is quite stiff. Backfill was compacted.	2	

GENERAL DISCUSSION OF STRUCTURAL RESPONSE

A summary statement can be made that the weapons tests in each case did not disprove standard assumptions used in blast design, limit design, and ultimate strength theory. On the contrary, many test results were verifiable with reasonable accuracy by employing the actual material strengths, as-built construction conditions and blast overpressure data available after the tests. Standard, reasonable, engineering analyses appear to be adequate within the range of accuracy of the test data. Much refinement is necessary for complete understanding of the structural action.

1. Earth-Covered, Semiburied, and Buried Steel Arch Shelters

The results of the tests emphasize the basic concern that above-ground structures in regions of high overpressure are loaded by severe, asymmetrical, drag forces. Above-ground, earth-covered, steel arch shelters[1] collapsed completely under short duration, 30 psi overpressure loads. Buried construction showed only minor damage at 100 psi.[2] The results of the tests indicate that the type of earth-covered, steel arch shelters tested will be operational up to an overpressure of 15 psi. The effect of the earth cover was to reduce the load on the lower, windward panels of the arches, and protect the lower, lee side panels by minimizing the horizontal outward displacements. The earth cover had little or no effect on reducing the downward force applied to the arch crowns.

It is worthy of note that (1) no arch shelters with well compacted backfill were tested using megaton range detonations, as Eniwetok soils used did not have the mechanical properties necessary for good compaction and passive pressure development; (2) semi buried steel arch shelters failed completely under high pressure, long duration loads;[3] and (3) all of the structures tested in Nevada which did not fail had proper soil and good compaction. Additional tests should be conducted on steel arch structures with good soil compaction using long duration loads, and on steel arch structures with poor compaction using short duration loads.

The results of the tests indicate that flexible arch shelters when buried or earth-covered to eliminate drag loading, and when backfilled with well-compacted soil of high shear strength, are loaded essentially symmetrically, and function properly up to overpressures of at least 50 psi when these over-

---

[1]Operation Teapot, Structure 3.6, page 95

[2]Operation Plumbbob, Structure 3.3a, page 127

[3]Operation Hardtack, Structures 3.2, page 189

pressures are of short duration. However, flexible arch shelters, backfilled or covered with loose soil of poor compactability, collapse at overpressure levels of less than 30 psi when loaded with either long or short duration blast forces.

Pipe sections buried at depths greater than their span appeared to deform predominately in the circumferential compression mode.

II. Steel Construction Compared to Concrete Construction

The results of the tests do not indicate that reinforced concrete structures have appreciably better structural response (lower accelerations, smaller deflections, less differential movement, etc.) than do steel structures designed for the same purposes. Due to the erratic nature of the test data, it can only be said that deflections measured on concrete structures tend to be smaller, on the average, than do corresponding deflections on steel structures. As expected, concrete acts in a brittle manner producing some missile hazard, while steel acts with high ductility. Distress in concrete structures is easily recognized by the resulting crack and spall pattern. Damage to steel structures does not present itself so graphically. No information is available on the pre-test and post-test conditions regarding the water tightness of the test structures. Accelerations of tested structures of both materials were comparable to the accelerations of the soil at the same depth of burial.

The instrumentation of the structures allows only limited insight into the interaction of structures with soil, the most important characteristic of the structural response of buried construction. The questionable accuracy of the data, as well as the lack of complete data, does not allow detailed analysis. However, a general, positive statement has been made. This concept , stated by several test program officers and not clearly supported by test results, suggests that steel arch structures, being highly flexible and, hence, inefficient in resisting unsymmetrical loads, respond to such loads by yielding sufficiently to allow significant passive pressures to be developed in the soil. These passive pressures, operating in resistance to the applied lateral loads, produce the soil pressure gage readings obtained in many tests which indicate essentially symmetrical structural loading. Hence, as a reciprocal, concrete structures of greater stiffness will not "lean into" the soil to develop passive pressures, and, as a result, are loaded more asymmetrically. Thus, steel structures gain support from the surrounding soil by "rolling with the punch," while concrete structures must rely more on their own inherent strength. Backfill must be well compacted to create significant passive pressures for small arch side-sway. In addition, arch span should be minimum. Arch length has no influence if greater than three times the radius of the arch, and if

shorter, contributes to the strength of the structure.

No full scale, buried, rectangular, steel structures were tested to allow correlation with buried, rectangular, concrete construction. Interesting tests of limited scope were conducted in Project 3.8 at Upshot-Knothole (pp 63) on buried steel beams, but do not indicate the composite response to be obtained from complete structural assemblies. Steel, rectangular models[4] were built but subjected to insufficient force to obtain structural response information.

The rectangular, reinforced concrete construction suffered only minor damage to below ground portions. Minor to severe cracking and displacement was experienced in the entry ways and stair walls, predominately due to flexure in a mode not normally experienced by soil-retaining components. Walls were pushed outward into the soil as atmospheric pressures were greater than the soil resistance. Extensive wind erosion occurred to exposed parts.

III. The Effects of Soil

All tests of sufficient strength to produce measurable structural response have shown that soil significantly effects the strengths of buried, semi-buried, and earth-covered structures. In addition to increasing the effective mass of a structure, soil resists movement and quickly damps out resulting vibrations. Overpressure is significantly reduced in intensity when the backfill is loose and can move or consolidate when the shock wave passes through it. Well compacted backfill of high shear strength, while being much less effective in reducing overpressure intensity than loose fill, will develop the passive resistance needed by flexible structures. If the depth of burial of a flexible structure is greater than its span, the soil will arch over the structure providing additional load resistance. No significant structural resistance was attributed to soil arching in the structures of smaller burial depth to span ratio.

It is generally recommended for arched or tubular structures that backfill be carefully selected and compacted to assure maximum resistance to flexural distortion. In addition, the test results lend support to the assumption that structures buried at depths equal to or greater than their span are loaded essentially symmetrically. No statements of a more specific nature should be made on the evidence obtained from these tests.

---

[4] Operation Buster-Jangle, Structures 3.3, page 20

IV. The Action of Structural Foundations

No damage was sustained by pad footings used in the massive, concrete, underground parking garage tested in Plumbbob Project 30.2 (pp 141). No other structure utilized separate footings.

The structural action of continuous, poured-in-place foundations was most graphically illustrated by the steel arched shelters of Operation Plumbbob. Being relatively flexible, these footings moved downward (3" maximum) and in some cases, outward, when not tied directly to the floor slab. Extensive foundation cracks occurred but due to the contained nature of the resulting configuration, no collapse was imminent.

The floor slab used in the steel arch shelters was free from the foundations and resisted their deflections by friction only. Only minor floor slab cracks occurred at 100 psi overpressure loadings. On the other hand, the massive, monolithic foundation-floor used in similar concrete arch shelters (Plumbbob 3.1, pp 116) suffered extensive crack damage. The difference in structural distress of these two floor systems is attributed to the mobility of the free foundations of the former over the massive, monolithic supports of the latter. It is to be recognized that the concrete arch structures were subjected to greater total loads, but probably could have had less damage, had the floor slab been free.

V. The Use of Models

Models have been used to obtain test results. It is feasible to design model tests which will yield meaningful results. The construction and testings of models should receive the same care as that of the prototype. The advantage of their use lies in lower total costs of construction due to smaller physical size. Models were tested in Project 3.6 of Operation Teapot (pp 95). Unfortunately, little was learned beyond the fact that the structure either did or did not fail, and the fact that sheet aluminum is weaker than sheet steel. Deflection was found to be a function of q rather than p + 0.25q as normally assumed, but the models were not constructed to give accurate results.

Models should be used extensively in laboratory tests in the planning of full scale tests.

LIMITATIONS

The weapons tests conducted on buried, semiburied, and earth-covered structures, in most cases, gave the information needed to satisfy the project objectives. For the most, these objectives were to determine whether a specific structure would or would not serve as an adequate personnel shelter. The writers of this report were interested

in more than the yes-or-no answers obtained in the tests. It was desired to isolate and examine the data in these tests to extract that information which is pertinent to the solution of the structural design problem.

The results of the investigation reveal that although a considerable amount of data was taken, much of it was either debatable in its reliability, incomplete in its scope, or not pertinent to the structural problem. When added to the fact that the structures tested were often standard structures not designed to carry blast loads, and, hence, contained obvious structural weaknesses, and that each project was different in basic points, giving a series of isolated examples, the results of a correlation became general and rather uninformative. Specifically, it can be said that standard assumptions of structural action were not refuted by the test results.

These full scale test programs were admirably conducted within the imposing limitations of project objectives, planning time, and financial support. It has been learned, for example, that certain types of structures can or cannot be used as blast shelters. Empirical rules can now be set up to govern the construction of the types of shelters tested. These rules can be extrapolated with ball-park accuracy to design shelters of somewhat different configurations. It should, however, be stated that much of the information is of inadequate content to do more for the field of structural analysis than suggest trends and provide background for generalized statements.

RECOMMENDATIONS

Considering buried, semiburied, and earth-covered construction, the writers recommend:

1. That additional full scale tests be conducted on structures of both concrete and steel construction;

2. That the total test program be placed under the guidance of a single, engineering-research-oriented group whose charge it will be to provide continuity and completeness to the program;

3. That all test programs be planned on the evidence of detailed preliminary investigations;

4. That the tests be designed to yield knowledge specifically applicable to structural design for blast loads for conditions of soil, and moisture content found in more representative sites, this information to indicate both the immediate strength and continued serviceability of the structures tested;

5. That particular care be taken to properly instrument the structures and surrounding soil to obtain:

(a) loading modes and magnitudes, as a function of time,
(b) response modes, time-motion history, and distortion magnitudes,
(c) soils-structure interaction characteristics;

6. That the same type of structure be tested repeatedly to evaluate:

   (a) the effect of soil,
   (b) the effect of berm configuration, and depth of burial,
   (c) the effect of overpressure, and drag,
   (d) the effect of duration of load application,

   and that the same tests be conducted on both steel and reinforced concrete structures of similar configuration;

7. That in conjunction with these tests, detailed information be obtained on:

   (a) response of buried shell structures,
   (b) shock isolation of total structures,
   (c) shock mounting of structural systems, and components.

SECRET

FORMERLY RESTRICTED DATA

FORMERLY RESTRICTED DATA

SECRET

Defense Threat Reduction Agency
45045 Aviation Drive
Dulles, VA 20166-7517

CPWC/TRC May 6, 1999

MEMORANDUM FOR DEFENSE TECHNICAL INFORMATION CENTER
ATTN: OCQ/MR WILLIAM BUSH

SUBJECT: DOCUMENT REVIEW

The Defense Threat Reduction Agency's Security Office has reviewed and declassified or assigned a new distribution statement:

- AFSWP-1069, **AD-341090**, STATEMENT A ✓ ~~AD~~ waiting for reply
- DASA-1151, AD-227900, STATEMENT A ✓
- DASA-1355-1, ~~AD-336443~~, STATEMENT A OK
- DASA-1298, AD-285252, STATEMENT A ✓
- DASA-1290, AD-444208, STATEMENT A ✓
- DASA-1271, AD-276892, STATEMENT A ✓
- DASA-1279, AD-281597, STATEMENT A ✓
- DASA-1237, AD-272653, STATEMENT A ✓
- DASA-1246, AD-279670, STATEMENT A ✓
- DASA-1245, AD-419911, STATEMENT A ✓
- DASA-1242, AD-279671, STATEMENT A ✓
- DASA-1256, AD-280809, STATEMENT A ✓
- DASA-1221, AD-243886, STATEMENT A
- DASA-1390, **AD-340311**, STATEMENT A ✓ ~~FAD~~
- ~~DASA-1283, AD-717097~~, STATEMENT A OK
- DASA-1285-5, AD-443589, STATEMENT A ✓
- DASA-1714, AD-473132, STATEMENT A ✓
- DASA-2214, AD-854912, STATEMENT A ✓
- DASA-2627, AD-514934, STATEMENT A ✓
- DASA-2651, AD-514615, STATEMENT A ✓
- ~~DASA-2536, AD-876697, STATEMENT A~~
- DASA-2722T-V3, AD-518506, STATEMENT A ✓
- DNA-3042F, AD-525631, STATEMENT A ✓
- DNA-2821Z-1, AD-522555, STATEMENT A ✓

If you have any questions, please call me at 703-325-1034.

Ardith Jarrett

ARDITH JARRETT
Chief, Technical Resource Center