UNCLASSIFIED

AD 285 358

Reproduced
by the

ARMED SERVICES TECHNICAL INFORMATION AGENCY
ARLINGTON HALL STATION
ARLINGTON 12, VIRGINIA

UNCLASSIFIED

NOTICE: When government or other drawings, specifications or other data are used for any purpose other than in connection with a definitely related government procurement operation, the U. S. Government thereby incurs no responsibility, nor any obligation whatsoever; and the fact that the Government may have formulated, furnished, or in any way supplied the said drawings, specifications, or other data is not to be regarded by implication or otherwise as in any manner licensing the holder or any other person or corporation, or conveying any rights or permission to manufacture, use or sell any patented invention that may in any way be related thereto.

285 358

63-1-1

CATALOGED BY ASTIA
AS AD No. 285358

T.&A.M. REPORT NO. 223

ANALYSIS OF MISSILE LAUNCHERS

Part Q

Tip-off Effects in Helical Rail Launchers

by

Wesley Hosken

ASTIA
OCT 2 1963
TISIA

Sponsored by

DEPARTMENT OF THE ARMY
Rock Island Arsenal
DA-11-070-508-ORD-593
ORD. Proj. No. 517-01-002
CMS CODE 55-30.11.577

DEPARTMENT OF THEORETICAL AND APPLIED MECHANICS
UNIVERSITY OF ILLINOIS

Technical Report No. 223
on a research project entitled
Dynamics of Missile Launchers
Proj. Supervisor. M. Stippes

ANALYSIS OF MISSILE LAUNCHERS

PART Q

Tipoff Effects in Helical Rail Launchers

by

Wesley Hosken

A Research Project of the

Department of Theoretical and Applied Mechanics

University of Illinois

Sponsored by

Department of the Army
Rock Island Arsenal
DA-11-070-508-ORD-593
ORD. Proj. No. 517-01-002
CMS Code 55-30.11.577

University of Illinois
Urbana, Illinois
September, 1962

The findings in this report are not to be construed
as an official Department of the Army position.

This is part Q of the report on University of Illinois Project No. 46-22-60-304 "Launcher Dynamics Study". The analysis was performed under Contract No. DA-11-070-508-ORD-593 (ORD Proj. No. 517-01-002, CMS CODE 55-30.11.577). This particular report contains an analysis of a three degree of freedom helical rail launcher including tipoff effect.

The program is under the technical supervision of Rock Island Arsenal (RIA), Rock Island, Illinois, and the administrative supervision of Chicago Ordnance District.

Respectfully submitted
University of Illinois

M. Stippes, Project Supervisor
Department of Theoretical and
Applied Mechanics

LAUNCHER DYNAMICS STUDY

Part Q - Tipoff Effects in Helical Rail Launchers

ABSTRACT:

This report contains an analysis of the motion of a four rail helical launcher system including tipoff, that is, the conditions when the front shoes leave the launcher but the rear shoes remain in contact with the guidance rail. The launcher is allowed three degrees of freedom (pitch, yaw, and roll).

TABLE OF CONTENTS

I.	Specification of the Problem	1
	1. Introduction	1
	2. Description of the System	1
	3. Coordinate Systems	4
	4. Generalized Coordinates	4
II.	Analysis of the Problem	7
	1. Before Tipoff	7
	2. After Tipoff	16

LIST OF SYMBOLS

O-X Y Z	Cartesian coordinates fixed to the earth
O-ξ η ζ	Cartesian coordinates fixed in the launcher
o-X' Y' Z'	Cartesian coordinates which are fixed to the missile
o-ξ' η' ζ'	Cartesian coordinates which are fixed in the missile
γ	Angle between the horizontal and the Y-axis
η_o	Initial η coordinate of the mass center of the missile in O-ξ η ζ
$(0, \eta, \zeta_m)$	Coordinates of the mass center of the missile in O-ξ η ζ
$(0, \eta_b, \zeta_b)$	Coordinates of the mass center of the launcher in O-ξ η ζ
k	Constant which prescribes the rotation of the missile relative to the η-axis
ψ, θ, ϕ	Rotations of O-ξ η ζ relative to O-X Y Z
ψ_m, θ_m, ϕ_m	Rotations of o-ξ' η' ζ' relative to o-X' Y' Z'
W_m	Weight of missile
M_m	Mass of missile
W_b	Weight of launcher
M_b	Mass of launcher
J_{11}, J_{12}, etc.	Mass moments of inertia of launcher relative to O-ξ η ζ
K_{11}, K_{12}, etc.	Mass moments of inertia of missile relative to o-ξ' η' ζ'
-a	η' coordinate of rear shoes in o-ξ' η' ζ'
c	η' coordinate of front shoes in o-ξ' η' ζ'
(R_x, R_y, R_z)	Components of launcher reaction at O in O-X Y Z
N_1, N_2, etc.	Magnitude of normal forces acting on missile shoes
F_1, F_2, etc.	Magnitude of frictional forces acting on missile shoes
D_1	Magnitude of driving force acting on missile shoe S_1
F (t)	Magnitude of thrust force acting on missile

t	time
(r_x, r_y, r_z)	Components in O-X Y Z of vector from O to o
L	Length of launcher rail
F_f	Total friction force acting on missile before tipoff
F_f'	Total friction force acting on missile after tipoff
a	Angle which locates rear shoe in o-ξ' η' ζ'
a'	Angle which locates front shoe in o-ξ' η' ζ'

I. SPECIFICATION OF THE PROBLEM

1. Introduction

In University of Illinois TAM Report No. 577,"Helical Rail Launchers", October, 1959, a helical rail launcher was described and analyzed for the time interval before tipoff.

This report extends the analysis to cover the tipoff interval when only the rear shoes of the missile are on the launcher rail. However, because of the increased complexity of the motion after tipoff, a different method of analysis is used and misalignment of the thrust force is neglected. The problem is completely reanalyzed because of these changes.

It is the purpose of this report to obtain the following items:

1) Equations of motion of the launcher and missile before and after tipoff.
2) The reaction of the launcher support.
3) The reactions between the shoes of the missile and the launcher rail.
4) The orientation and motion of the launcher and missile at launch.

2. Description of the System

The system which is analyzed is shown in Fig. 1. The launcher is pinned to a rigid base at point O. In addition three rotation springs act at point O. The missile is forced to rotate about its longitudinal axis an amount $k(\eta - \eta_0)$ relative to the launcher rail while the rear shoes of the missile are on the launcher rail. The longitudinal axis of the missile, which contains the mass center, o, is constrained to remain parallel to the launcher rail while the front shoes of the missile are on the launcher rail. The thrust force acts along the longitudinal axis of the missile. The system is in equilibrium before the thrust force is applied to the

missile. The center of mass of the launcher, O' , and the center of mass of the missile, o , are initially in the YZ plane. It is assumed that the static equilibrium pitch deflection of the launcher is small.

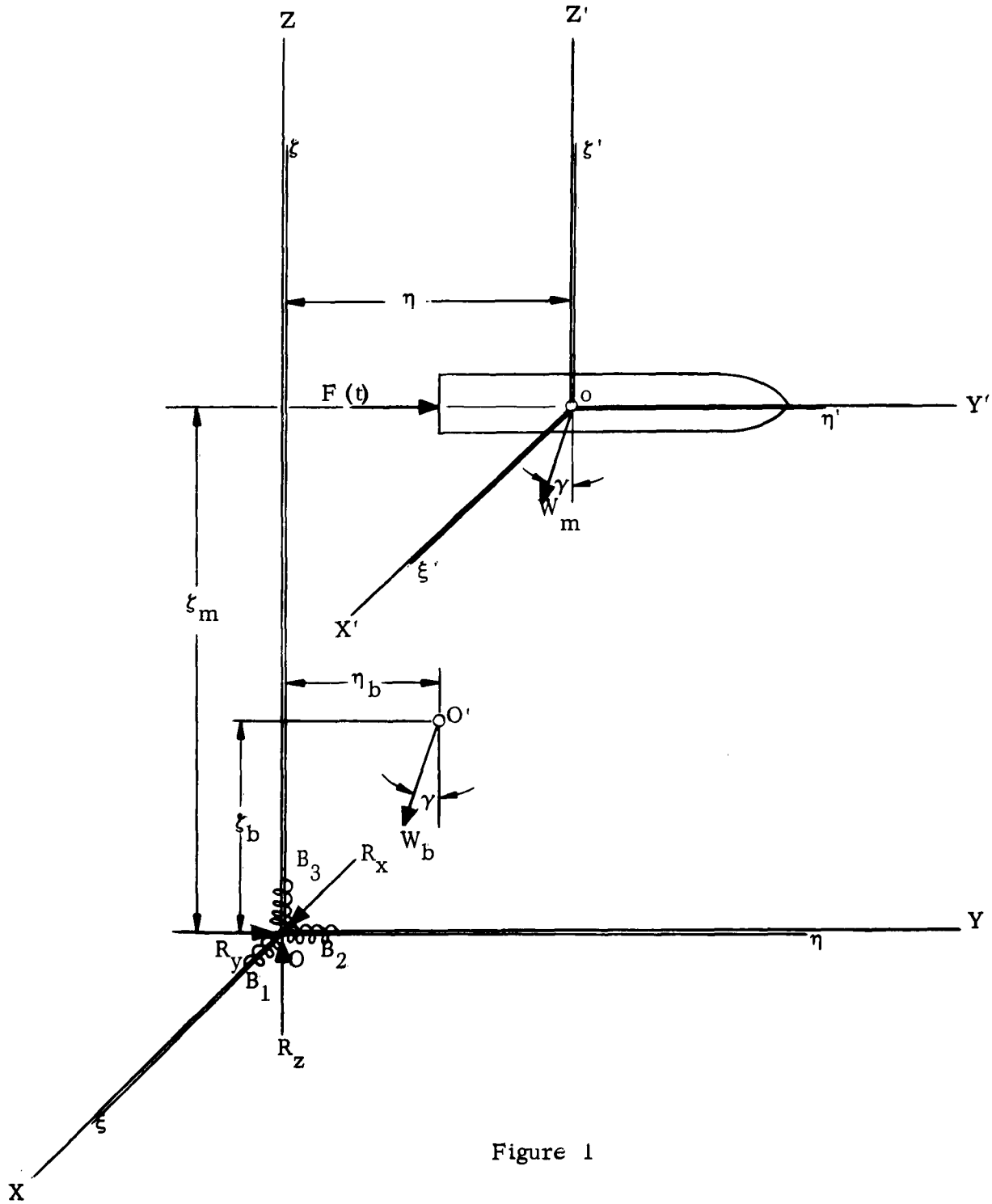

Figure 1

3. Coordinate Systems

The coordinate systems used are shown in Fig. 1.

Fixed Coordinates O-XYZ A cartesian coordinate system fixed to the earth. The X-axis is horizontal and the Y-axis is initially parallel to the launcher rail making an angle γ with the horizontal.

Rotating Coordinates O-$\xi\ \eta\ \zeta$ A cartesian coordinate system fixed in the launcher, and initially coincident with the O-XYZ coordinate system. The components of the inertia tensor of the launcher in the O-$\xi\ \eta\ \zeta$ coordinate system are denoted by J_{11}, J_{12}, etc. The launcher is symmetric about the $\eta\zeta$-plane, and therefore $J_{12} = J_{13} = 0$.

Translating Coordinates o-X' Y' Z' A cartesian coordinate system fixed to the missile at point o, which is always parallel to the O-X Y Z coordinate system. The Y'-axis is initially coincident with the longitudinal axis of the missile.

Translating and Rotating Coordinates o-$\xi'\ \eta'\ \zeta'$ A cartesian coordinate system which is fixed in the missile and is initially coincident with the o-X' Y' Z' coordinate system. The components of the inertia tensor of the missile in the o-$\xi'\ \eta'\ \zeta'$ coordinate system are denoted by K_{11}, K_{12}, etc. The ξ', η' and ζ' axes are principle axes of the missile, and therefore $K_{12} = K_{13} = K_{23} = 0$.

4. Generalized Coordinates

Before tipoff the system has four degrees of freedom; therefore four generalized coordinates are required to completely describe the motion of the system. The angles ϕ, ψ, and θ determine the angular orientation of the launcher, and the distance η determines the location of the missile on the rail.

After tipoff the system has six degrees of freedom, and therefore two additional generalized coordinates are required to completely describe the motion of the system. These are the angles ψ_m and ϕ_m, which determine the angular orientation of the missile.

The distance η is indicated in Fig. 1. The angles ϕ, ψ and θ, taken in that order, are the rotations of the launcher indicated in Fig. 2. The angles ϕ_m, ψ_m and θ_m, taken in that order, are the rotations of the missile indicated in Fig. 3. From the constraining conditions on the missile it follows that

$$\theta_m = \theta + k(\eta - \eta_o) \tag{1}$$

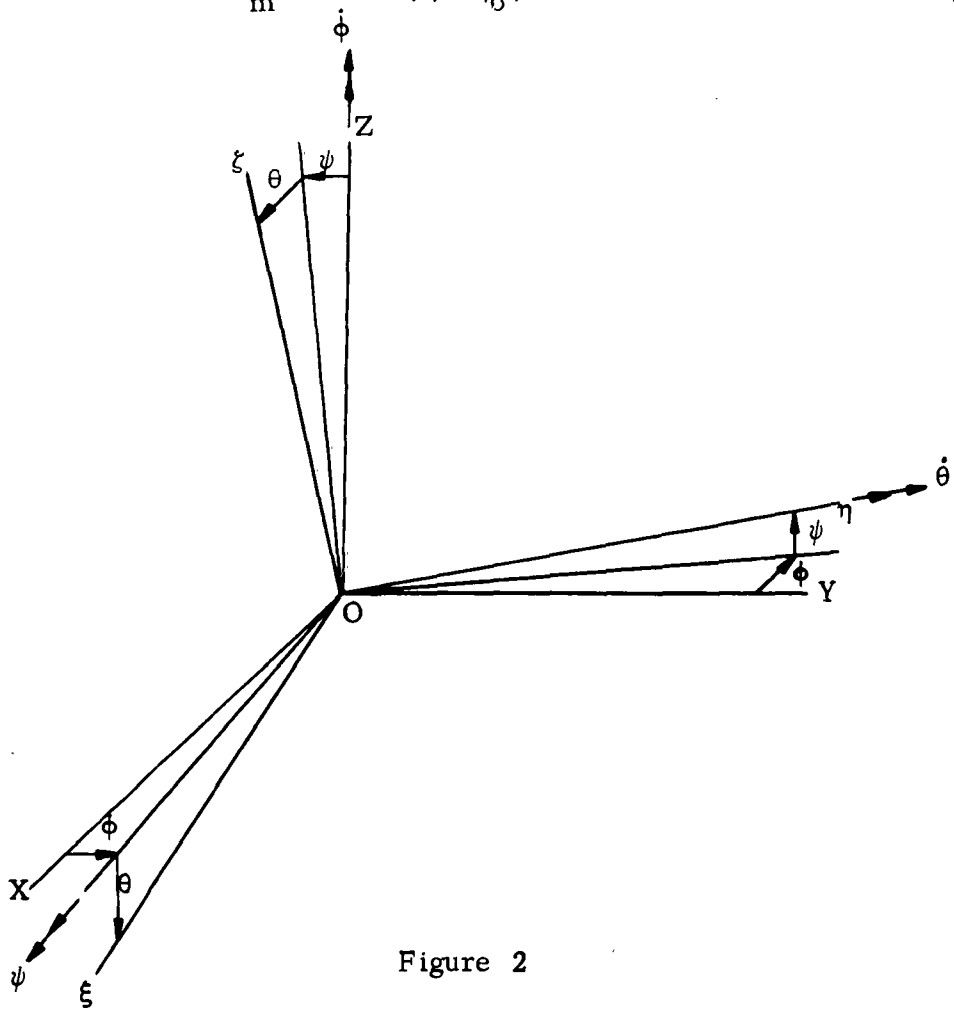

Figure 2

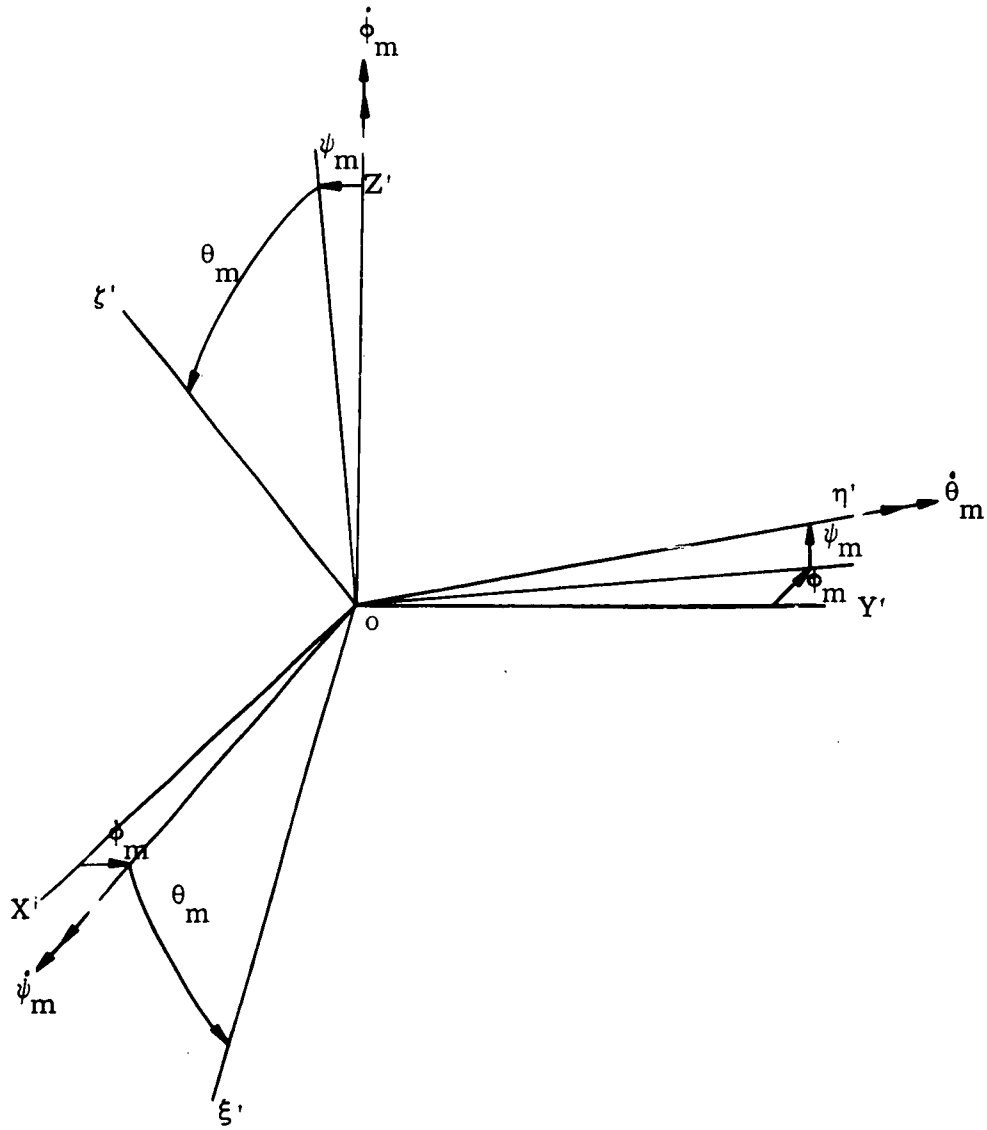
$\dot{\phi}_m$
ψ_m
Z'
θ_m
ζ'
η'
$\dot{\theta}_m$
ψ_m
ϕ_m
Y'
o
ϕ_m
X'
θ_m
$\dot{\psi}_m$
ξ'

Figure 3

II. ANALYSIS OF THE PROBLEM

In this report the angles ϕ, ψ, θ, ϕ_m, and ψ_m and their time derivatives are treated as small numbers, and therefore products of two or more of these variables are neglected.

1. Before Tipoff: $L - c \geq \eta$

The equation which describes the motion of the missile along the rail is:

$$\sum F_{m\eta} = M_m a_\eta$$

or

$$F(t) - W_m(\sin\gamma + \psi \cos\gamma) - F_f = M_m(\ddot{\eta} - \zeta_m \ddot{\psi}) \tag{2}$$

For the system as a whole,

$$\bar{G} = \dot{\bar{H}} = \dot{\bar{H}}_b + \dot{\bar{h}}_m + \frac{d}{dt}(\bar{r} \times M_m \dot{\bar{r}}) \tag{3}$$

where the vectors are defined as follows:

$\bar{G}$ = The sum of the moments of the external forces about point O.

$\bar{H}$ = The angular momentum of the system about point O.

$\bar{H}_b$ = The angular momentum of the launcher about point O.

$\bar{h}_m$ = The angular momentum of the missile about point o.

$\bar{r}$ = The vector from O to o.

From Fig. 2

$$\omega_\xi \doteq \dot{\psi} \quad , \omega_\eta \doteq \dot{\theta} \quad , \quad \omega_\zeta \doteq \dot{\phi} \tag{4}$$

and therefore

$$H_{bX} \doteq H_{b\xi} \doteq J_{11}\,\dot{\psi}$$

$$H_{bY} \doteq H_{b\eta} \doteq J_{22}\,\dot{\theta} - J_{23}\,\dot{\phi} \tag{5}$$

$$H_{bZ} \doteq H_{b\zeta} \doteq -J_{23}\,\dot{\theta} + J_{33}\,\dot{\phi} \quad .$$

Before tipoff $\phi_m = \phi$, and $\psi_m = \psi$. Therefore, from Fig. 3

$$\omega_{\xi'} \doteq \dot{\psi}\cos\theta_m - \dot{\phi}\sin\theta_m$$

$$\omega_{\eta'} \doteq \dot{\theta}_m \doteq \dot{\theta} + k\,\dot{\eta} \tag{6}$$

$$\omega_{\zeta'} = \dot{\phi}\cos\theta_m + \dot{\psi}\sin\theta_m$$

and

$$h_{mX} \doteq h_{m\xi'}\cos\theta_m + h_{m\zeta'}\sin\theta_m \doteq K_{11}\,\dot{\psi}$$

$$h_{mY} \doteq h_{m\eta'} \doteq K_{22}(\dot{\theta} + k\,\dot{\eta}) \tag{7}$$

$$h_{mZ} \doteq -h_{m\xi'}\sin\theta_m + h_{m\zeta'}\cos\theta_m \doteq K_{33}\,\dot{\phi}$$

From Figs. 1 and 2

$$r_x = \zeta_m\,\theta - \eta\,\phi \qquad \dot{r}_x = \zeta_m\,\dot{\theta} - \dot{\eta}\,\phi - \eta\,\dot{\phi}$$

$$r_y = \eta - \zeta_m\,\psi \qquad \dot{r}_y = \dot{\eta} - \zeta_m\,\dot{\psi} \tag{8}$$

$$r_z = \zeta_m + \eta\,\psi \qquad \dot{r}_z = \dot{\eta}\,\psi + \eta\,\dot{\psi}$$

Also, recalling that the system is initially in equilibrium and that the static equilibrium pitch deflection is small, we have

$$G_X = -\zeta_m F(t) - W_m(\eta - \eta_o)\cos\gamma + B_1\psi$$

$$G_Y = -\zeta_m F(t)\phi + (W_b\cos\gamma)(\theta\zeta_b - \phi\eta_b)$$

$$+ (W_m\cos\gamma)(\theta\zeta_m - \eta\phi) + B_2\theta \tag{9}$$

$$G_Z = \zeta_m F(t)\theta + (W_b\sin\gamma)(-\zeta_b\theta + \eta_b\phi)$$

$$+ (W_m\sin\gamma)(-\zeta_m\theta + \eta\phi) + B_3\phi$$

Combining Eqs. (3), (5), (7), (8), and (9), we obtain the following three equations of motion:

$$\left[J_{11} + K_{11} + (\zeta_m^2 + \eta^2)M_m\right]\ddot{\psi} + 2\eta\dot{\eta}M_m\dot{\psi} - B_1\psi$$

$$= \zeta_m\ddot{\eta} - \zeta_m F(t) - W_m(\eta - \eta_o)\cos\gamma \tag{10}$$

$$\left[J_{22} + K_{22} + \zeta_m^2 M_m\right]\ddot{\theta} - \left[J_{23} + M_m\eta\zeta_m\right]\ddot{\phi} - 2M_m\zeta_m\dot{\eta}\dot{\phi}$$

$$+ \left[-M_m\zeta_m\ddot{\eta} + \zeta_m F(t) + (\eta_b W_b + \eta W_m)\cos\gamma\right]\phi \tag{11}$$

$$- \left[B_2 + (W_b\zeta_b + W_m\zeta_m)\cos\gamma\right]\theta = -K_{22}k\ddot{\eta}$$

$$\left[J_{33} + K_{33} + \eta^2 M_m\right]\ddot{\phi} - \left[J_{23} + M_m\eta\zeta_m\right]\ddot{\theta} + 2\eta\dot{\eta}M_m\dot{\phi}$$

$$\left[+ M_m\zeta_m\ddot{\eta} - \zeta_m F(t) + (W_b\zeta_b + W_m\zeta_m)\sin\gamma\right]\theta \tag{12}$$

$$- \left[B_3 + (W_b\eta_b + W_m\eta)\sin\gamma\right]\phi = 0$$

It is usually more convenient to have the second derivative of only one of the angles in each equation. For this reason we take linear combinations of Eqs. (11) and (12), and replace them with the following two equations:

$$
\begin{aligned}
&\left(\left[J_{33}+K_{33}+\eta^2 M_m\right]\left[J_{22}+K_{22}+\zeta_m^2 M_m\right]-\left[J_{23}+M_m \eta \zeta_m\right]^2\right)\ddot{\theta} \\
&\quad+\left(\left[J_{33}+K_{33}+\eta^2 M_m\right]\left[-B_2-(W_b \zeta_b+W_m \zeta_m)\cos\gamma\right]\right. \\
&\qquad\left.+\left[J_{23}+M_m \eta \zeta_m\right]\left[M_m \zeta_m \ddot{\eta}-\zeta_m F(t)+(W_b \zeta_b+W_m \zeta_m)\sin\gamma\right]\right)\theta \\
&\quad+\left(\left[J_{33}+K_{33}\right]\left[-2\dot{\eta} M_m \zeta_m\right]+2 J_{23} \eta \dot{\eta} M_m\right)\dot{\phi} \qquad (13) \\
&\quad+\left(\left[J_{33}+K_{33}+\eta^2 M_m\right]\left[-M_m \zeta_m \ddot{\eta}+\zeta_m F(t)+(\eta_b W_b+\eta W_m)\cos\gamma\right]\right. \\
&\qquad\left.+\left[J_{23}+M_m \zeta_m \eta\right]\left[-B_3-(W_b \eta_b+W_m \eta)\sin\gamma\right]\right)\phi \\
&\qquad = -K_{22} k (J_{33}+K_{33}+\eta^2 M_m)\ddot{\eta}
\end{aligned}
$$

$$
\begin{aligned}
&\left(\left[J_{22}+K_{22}+\zeta_m^2 M_m\right]\left[J_{33}+K_{33}+\eta^2 M_m\right]-\left[J_{23}+M_m \eta \zeta_m\right]^2\right)\ddot{\phi} \\
&\quad+\left(-2 J_{23} M_m \zeta_m \dot{\eta}+\left[J_{22}+K_{22}\right] 2 \eta \dot{\eta} M_m\right)\dot{\phi} \\
&\quad+\left(\left[J_{23}+M_m \zeta_m \eta\right]\left[-M_m \zeta_m \ddot{\eta}+\zeta_m F(t)+(\eta_b W_b+\eta W_m)\cos\gamma\right]\right. \\
&\qquad\left.+\left[J_{22}+K_{22}+\zeta_m^2 M_m\right]\left[-B_3-(W_b \eta_b+W_m \eta)\sin\gamma\right]\right)\phi \qquad (14) \\
&\quad+\left(\left[J_{23}+M_m \zeta_m \eta\right]\left[-B_2-(W_b \zeta_b+W_m \zeta_m)\cos\gamma\right]\right. \\
&\qquad\left.+\left[J_{22}+K_{22}+\zeta_m^2 M_m\right]\left[M_m \zeta_m \ddot{\eta}-\zeta_m F(t)+(W_b \zeta_b+W_m \zeta_m)\sin\gamma\right]\right)\theta \\
&\qquad = -K_{22} k (J_{23}+M_m \zeta_m \eta)\ddot{\eta}
\end{aligned}
$$

The front and rear shoes of the missile are located in the o- $\xi'\eta'\zeta'$ coordinate system by the distances c and a and the angles α' and α shown in Figs. 4 and 5. The angles β' and β, where

$$\beta' = a' + \theta + k(\eta - \eta_o)$$
$$\beta = a + \theta + k(\eta - \eta_o) \tag{15}$$

then locate these shoes in the O-XYZ and the o-X'Y'Z' coordinate systems.

The coordinates of o and O' in the O-XYZ coordinate system are:

$$o : (\zeta_m \theta - \eta \phi, \ \eta - \zeta_m \psi, \ \zeta_m + \eta \psi)$$
$$O' : (\zeta_b \theta - \eta_b \phi, \ \eta_b - \zeta_b \psi, \ \zeta_b + \eta_b \psi) \tag{16}$$

The coordinates of the shoes and points A and B in the o-X'Y'Z' coordinate system are:

$$S_1 : (R \cos\beta + a\phi, \ -a, \ -R \sin\beta - a\psi)$$
$$S_2 : (-R \sin\beta + a\phi, \ -a, \ -R \cos\beta - a\psi)$$
$$S_3 : (-R \cos\beta + a\phi, \ -a, \ R \sin\beta - a\psi)$$
$$S_4 : (R \sin\beta + a\phi, \ -a, \ R \cos\beta - a\psi)$$
$$S_5 : (R \cos\beta' - c\phi, \ c, \ -R \sin\beta' + c\psi)$$
$$S_6 : (-R \sin\beta' - c\phi, \ c, \ -R \cos\beta' + c\psi) \tag{17}$$
$$S_7 : (-R \cos\beta' - c\phi, \ c, \ R \sin\beta' + c\psi)$$
$$S_8 : (R \sin\beta' - c\phi, \ c, \ R \cos\beta' + c\psi)$$
$$A : (a\phi, \ -a, \ -a\psi)$$
$$B : (-c\phi, \ c, \ c\psi)$$

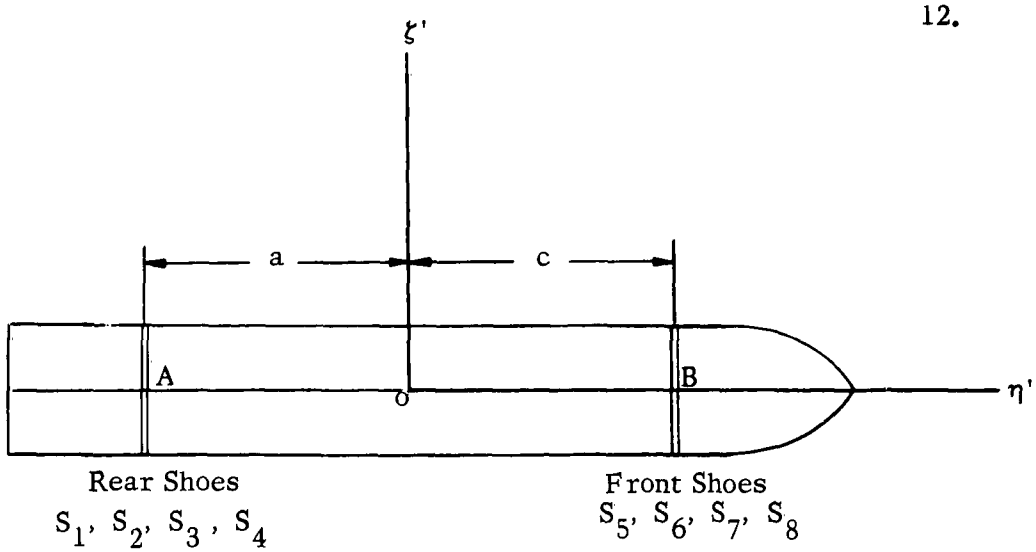

Figure 4

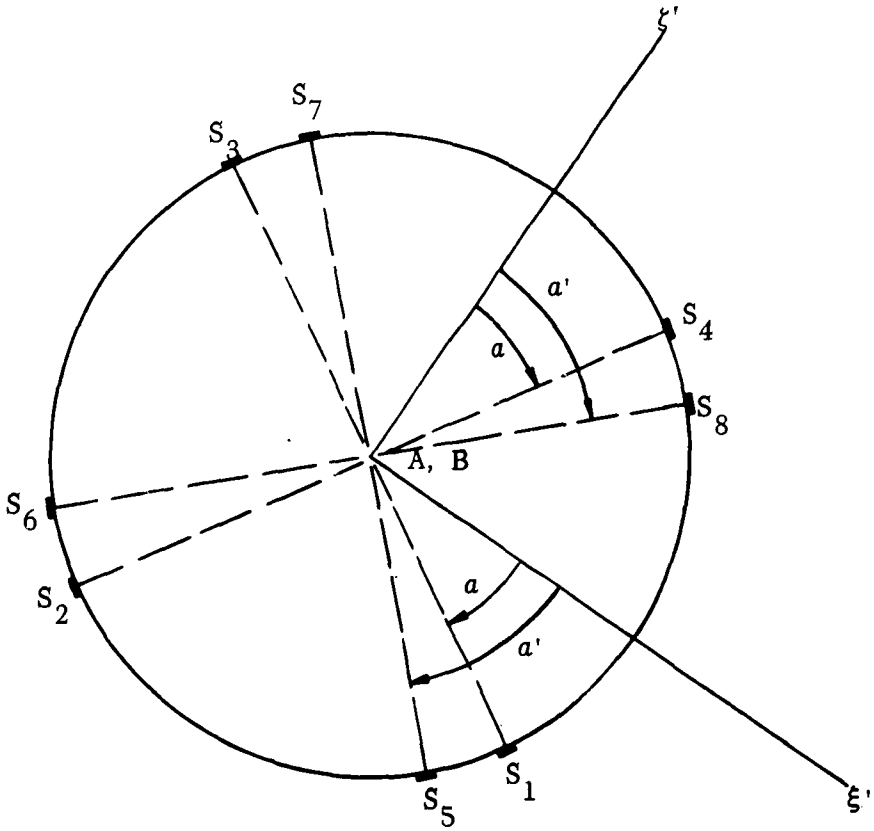

Figure 5

The reaction at each shoe on the missile consists of a normal force which is perpendicular to the η'-axis and a friction force which is parallel to the η'-axis. In addition a driving force acts perpendicular to the normal and friction forces at shoe S_1, causing the missile to rotate relative to the rail. The shoes are presumed to be spring loaded so that

$$N_1 + N_3 = c_1 \qquad N_2 + N_4 = c_2$$
$$N_5 + N_7 = c_3 \qquad N_6 + N_8 = c_4 \tag{18}$$

Note that this involves a contradiction since the missile axis is supposed to remain parallel to the launcher during the pre-tipoff motion. If however the spring constants are large so that the motion of the missile axis relative to the launcher is small compared to the motion of the launcher itself, no great error is introduced, and this does remove the problem of indeterminacy in a four rail system without introducing the added complexity of relative transverse motion between missile and launcher.

The friction forces are related to the normal forces by the coefficient of friction μ, so that:

$$F_1 = \mu N_1, \quad F_2 = \mu N_2, \text{ etc.} \tag{19}$$

The components in the O-XYZ coordinate system of all the forces acting on the rocket are:

$$N_2 - N_1 : \left(\left[N_3 - N_1\right] \cos\beta,\ 0,\ -\left[N_3 - N_1\right] \sin\beta \right)$$

$$N_2 - N_4 : \left(\left[N_2 - N_4\right] \sin\beta,\ 0,\ \left[N_2 - N_4\right] \cos\beta \right)$$

$$N_7 - N_5 : \left(\left[N_7 - N_5\right] \cos\beta',\ 0,\ -\left[N_7 - N_5\right] \sin\beta' \right)$$

$$N_6 - N_8 : \left(\left[N_6 - N_8\right] \sin\beta',\ 0,\ \left[N_6 - N_8\right] \cos\beta' \right) \tag{20}$$

$$D_1 : (-D_1 \sin\beta,\ 0,\ -D_1 \cos\beta)$$

$$T : (-F(t)\phi,\ F(t),\ F(t)\ \psi)$$

$$W_m : (0,\ -W_m \sin\gamma,\ -W_m \cos\gamma)$$

$$F_1 : (F_1 \phi,\ -F_1,\ -F_1\ \psi)$$

$$\vdots$$

$$F_8 : (F_8 \phi,\ -F_8,\ -F_8\ \psi)$$

For forces acting on launcher replace $F_1, \ldots F_8$ by $(0,\ +F_f,\ 0)$.

The equations of motion of the missile are:

$$\begin{aligned} \sum \overline{F} &= M_m\, \overline{a}_o \\ \overline{G} &= \dot{\overline{h}}_{om} \end{aligned} \tag{21}$$

Using Eqs. (15), (16), (17), (19), and (20), Eqs. (21) can be rewritten in matrix form:

$$\Delta \cdot \Lambda = A \tag{22}$$

where

$$\Delta = \begin{Vmatrix} N_3 - N_1 \\ N_2 - N_4 \\ N_7 - N_5 \\ N_6 - N_8 \\ D_1 \end{Vmatrix} \qquad A = \begin{Vmatrix} M_m(\zeta_m \ddot{\theta} - \ddot{\eta}\phi - 2\dot{\eta}\dot{\phi} - \eta\ddot{\phi}) + (F(t) - F_f)\phi \\ M_m(\ddot{\eta}\phi + 2\dot{\eta}\dot{\phi} + \eta\ddot{\phi}) + W_m \cos\gamma - (F(t) - F_f)\psi \\ K_{11}\ddot{\psi} \\ K_{22}(\ddot{\theta} + k\ddot{\eta}) \\ K_{33}\ddot{\phi} \end{Vmatrix}$$

$$\Lambda = \begin{Vmatrix} \cos\beta & \sin\beta & \cos\beta' & \sin\beta' & -\sin\beta \\ -\sin\beta & \cos\beta & -\sin\beta' & \cos\beta' & -\cos\beta \\ (a+uR)\sin\beta & -(a+uR)\cos\beta & -(c-uR)\sin\beta' & (c-uR)\cos\beta' & a\cos\beta \\ (a+uR)(\phi\sin\beta - \psi\cos\beta) & (a+uR)(\phi\cos\beta - \psi\sin\beta) & -(c-uR)(\phi\sin\beta' - \psi\cos\beta') & -(c-uR)(\phi\cos\beta' - \psi\sin\beta') & R+a\phi\cos\beta + a\psi\sin\beta \\ (a+uR)\cos\beta & (a+uR)\sin\beta & -(c-uR)\cos\beta' & -(c-uR)\sin\beta' & -a\sin\beta \end{Vmatrix}$$

The shoe reactions can be found by solving the above set of linear equations and using Eqs. (18) and (19).

The components in the O-XYZ coordinate system of the reaction at O and the weight of the launcher are:

$$\begin{aligned} R &: (R_x, R_y, R_z) \\ W_b &: (0, -W_b \sin\gamma, -W_b \cos\gamma) \end{aligned} \tag{23}$$

Therefore, from the remaining equation of motion of the launcher ($\sum F = M_b \bar{a}_O$), we obtain the following equations for the reaction at O :

$$R_x = (T - F_f)\,\phi + M_m(\zeta_b\,\ddot{\theta} - \ddot{\eta}\phi - 2\dot{\eta}\dot{\phi} - \eta\ddot{\phi}) + M_b(\zeta_b\,\ddot{\theta} - \eta_b\,\ddot{\phi})$$

$$R_y = W_b \sin\gamma \quad F_f - M_b\,\zeta_b\,\ddot{\psi} \tag{24}$$

$$R_z = -(T - F_f)\,\psi + W_m \cos\gamma + M_m(\ddot{\eta}\,\phi + 2\dot{\eta}\dot{\phi} + \eta\,\ddot{\phi}) + W_b \cos\gamma + M_b\,\eta_b\,\ddot{\psi}$$

2. After Tipoff: $L - c \leq \eta \leq L + a$

The coordinates in the O-XYZ coordinate system of shoe S_1 and points A, O' and o are :

$$S_1 : (\zeta_m\,\theta - (\eta - a)\phi + R\cos\beta,\ \eta - a - \zeta_m\,\psi,\ \zeta_m + (\eta - a)\,\psi - R\sin\beta)$$

$$A : (\zeta_m\,\theta - (\eta - a)\,\phi,\ \eta - a - \zeta_m\,\psi,\ \zeta_m + (\eta - a)\,\psi)$$

$$O' : (\zeta_b\,\theta - \eta_b\,\phi,\ \eta_b - \zeta_b\,\psi,\ \zeta_b + \eta_b\psi) \tag{25}$$

$$o : (\zeta_m\,\theta - (\eta - a)\,\phi - a\,\phi_m,\ \eta - \zeta_m\,\psi,\ \zeta_m + (\eta - a)\,\psi + a\,\psi_m$$

The coordinates in the o-X' Y'Z'coordinate system of shoes S_1, S_2, S_3, S_4, and point A are:

$$S_1 : (R\cos\beta + a\,\phi_m,\ -a,\ -R\sin\beta - a\,\psi_m)$$

$$S_2 : (-R\sin\beta + a\,\phi_m,\ -a,\ -R\cos\beta - a\,\psi_m)$$

$$S_3 : (-R\cos\beta + a\,\phi_m,\ -a,\ R\sin\beta - a\,\psi_m) \tag{26}$$

$$S_4 : (R\sin\beta + a\,\phi_m,\ -a,\ R\cos\beta - a\,\psi_m)$$

$$A : (a\,\phi_m,\ -a,\ -a\,\psi_m)$$

The components in the O-XYZ coordinate system of the forces acting on the missile are:

$$N_3 - N_1 : ([N_3 - N_1] \cos\beta,\ 0\ ,\ -[N_3 - N_1] \sin\beta)$$

$$N_2 - N_4 : ([N_2 - N_4] \sin\beta\ ,\ 0\ ,\ [N_2 - N_4] \cos\beta)$$

$$D_1 : (-D_1 \sin\beta\ ,\ 0\ ,\ -D_1 \cos\beta)$$

$$T : (-T\,\phi_m\ ,\ T,\ T\,\psi_m) \tag{27}$$

$$W_m : (0\ ,\ -W_m \sin\gamma,\ -W_m \cos\gamma)$$

$$F_1 : (F_1\phi_m, -F_1, -F_1\psi_m)$$

$$\vdots \qquad \vdots$$

$$F_4 : (F_4\phi_m, -F_4, -F_4\psi_m)$$

For forces acting on launcher replace $F_1, \ldots F_4$ by $(0,\ F'_f,\ 0)$.

The equations of motion for the launcher and the missile are:

$$\sum \bar{F}_m = M_m \bar{a}_o \qquad \sum F_b = M_b \bar{a}_o$$

$$\bar{G}_o = \dot{\bar{h}}_o \qquad \bar{G}_o = \dot{\bar{h}}_o \tag{28}$$

Using Eqs. (19), (23), (25), (26) and (27), Eq. (28) can be rewritten in the following form:

$$J_{11}\ddot{\psi} = -\left[\zeta_m + (\eta - a)\psi\right] F'_f + (\eta - a - \zeta_m \psi)\sin\beta\,(N_3 - N_1)$$

$$- (\eta - a - \zeta_m \psi)\cos\beta\,(N_2 - N_4) + (\eta - a - \zeta_m \psi)\cos\beta\, D_1 + B_1 \psi$$

$$J_{22}\ddot{\theta} - J_{23}\ddot{\phi} = -\left[\zeta_m \theta - (\eta - a)\phi\right]\sin\beta\,(N_3 - N_1) + \left[\zeta_m \theta - (\eta - a)\phi\right]\cos\beta\,(N_2 - N_4)$$

$$- \left[\zeta_m + (\eta - a)\psi\right]\cos\beta\,(N_3 - N_1) - \left[\zeta_m + (\eta - a)\psi\right]\sin\beta\,(N_2 - N_4)$$

$$- \left[\zeta_m \theta - (\eta - a)\phi\right]\cos\beta\, D_1 + \left[\zeta_m + (\eta - a)\psi\right]\sin\beta\, D_1$$

$$+ (\zeta_b \theta - \eta_b \phi) W_b \cos\gamma + B_2 \theta$$

$$-J_{23}\ddot{\theta} + J_{33}\ddot{\phi} = \left[\zeta_m \theta - (\eta - a)\phi\right] F'_f + (\eta - a - \zeta_m \psi)\cos\beta\,(N_3 - N_1)$$

$$+ (\eta - a - \zeta_m \psi)\sin\beta\,(N_2 - N_4) - (\eta - a - \zeta_m \psi)\sin\beta\, D_1$$

$$- (\zeta_b \theta - \eta_b \phi) W_b \sin\gamma + B_3 \phi \qquad (29)$$

$$M_m(\ddot{\eta} - \zeta_m \ddot{\psi}) = F(t) - F'_f - W_m \sin\gamma$$

$$K_{11}\ddot{\psi}_m = (a + uR)\left[\sin\beta\,(N_3 - N_1) - \cos\beta\,(N_2 - N_4)\right] + a D_1 \cos\beta$$

$$K_{33}\ddot{\phi}_m = (a + uR)\left[\cos\beta\,(N_3 - N_1) + \sin\beta\,(N_2 - N_4)\right] - a D_1 \sin\beta$$

$$(N_3 - N_1) = -F'_f(\psi_m \sin\beta + \phi_m \cos\beta) + F(t)(\phi_m \cos\beta - \psi_m \sin\beta)$$

$$- W_m \sin\beta\cos\gamma + M_m \cos\beta\left[\zeta_m \ddot{\theta} - \ddot{\eta}\phi - 2\dot{\eta}\dot{\phi} - (\eta - a)\ddot{\phi} - a\ddot{\phi}_m\right]$$

$$- M_m \sin\beta\left[\ddot{\eta}\ddot{\psi} + 2\dot{\eta}\dot{\psi} + (\eta - a)\ddot{\psi} + a\ddot{\psi}_m\right]$$

$$D_1 = \frac{1}{R}\Bigg(K_{yy}(\ddot{\theta} + k\ddot{\eta}) - (a + uR)\Big[(\phi_m \sin\beta - \psi_m \cos\beta)(N_3 - N_1)$$

$$- (\psi_m \sin\beta + \phi_m \cos\beta)(N_2 - N_4)\Big]\Bigg)$$

$$(N_2 - N_4) - D_1 = + F'_f(\psi_m \cos\beta - \phi_m \sin\beta) + F(t)(\phi_m \sin\beta - \psi_m \cos\beta) + W_m \cos\beta \cos\gamma$$

$$+ M_m \sin\beta \left[\zeta_m \ddot{\theta} - \ddot{\eta}\phi - 2\dot{\eta}\dot{\phi} - (\eta - a)\ddot{\phi} - a\ddot{\phi}_m\right]$$

$$+ M_m \cos\beta \left[\ddot{\eta}\psi + 2\dot{\eta}\dot{\psi} + (\eta - a)\ddot{\psi} + a\ddot{\psi}_m\right]$$

$$R_x = M_m(\zeta_m \ddot{\theta} - \ddot{\eta}\phi - 2\dot{\eta}\dot{\phi} - (\eta - a)\ddot{\phi} - a\ddot{\phi}_m) + (F(t) - F'_f)\phi_m + M_b(\zeta_b \ddot{\theta} - \eta_b \ddot{\phi})$$

$$R_y = -F'_f + W_b \sin\gamma - M_b \zeta_b \ddot{\psi}$$

$$R_z = W_m \cos\gamma + W_b \cos\gamma - (F(t) - F'_f)\psi_m + M_m(\ddot{\eta}\psi + 2\dot{\eta}\dot{\psi} + (\eta - a)\ddot{\psi} + a\ddot{\psi}_m)$$

$$+ M_b \eta_b \ddot{\psi}$$

The first nine of Eq. (29) may be solved independently of the last three which are used only to determine the reactions on the launcher at O.

DISTRIBUTION LIST
FOR TECHNICAL REPORTS UNDER
LAUNCHER DYNAMICS CONTRACT

Office, Chief of Ordnance
Department of the Army
Washington 25, D. C.
ATTN: ORDTW 1
ORDTB 1
ORDTU 1

Commanding General
Ordnance Weapons Command
Rock Island, Illinois
ATTN: ORDOW-TL 2

Commander
Army Ballistics Missile Agency
Redstone Arsenal, Ala.
ATTN: ORDAB-RAP 2
ORDAB-RH 1

Commanding General
Headquarters, CONARC
Fort Monroe, Va.
ATTN: Chief, Development Section 1

Commandant
U.S. Army, A & M School
Fort Sill, Okla. 1

President
U.S. Army Artillery Board
Fort Sill, Okla. 1

Department of Ordnance
U.S. Military Academy
West Point, N.Y. 1

Commanding Officer
Watertown Arsenal
Watertown 72, Mass.
ATTN: ORDBE-TX 1

Commanding General
Army Rocket & Guided Missile Agency
Redstone Arsenal, Ala. 1

Commanding Officer
Chicago Ordnance District
623 S. Wabash Ave.
Chicago 6, Ill. 2

Commanding General
Aberdeen Proving Ground
Aberdeen, Md.
ATTN: ORDBG-BRL 1

Commander
Armed Serviced Technical Information Agency
Document Service Center
Arlington Hall Station
Arlington 12, Va.
ATTN: DSC-SE 10

Commanding Officer
Diamond Ordnance Fuze Laboratory
Connecticut Ave. & Van Ness
Washington 25, D. C.
ATTN: Technical Reference Section 1

Commanding Officer
Rock Island Arsenal
Rock Island, Ill.
ATTN: 9310 17
5100 1

Commanding Officer
Picatinny Arsenal
Dover, N.J. 1

Director
Marine Corps Development Center
Marine Corps Schools
Quantico, Va. 1

Commanding General
U.S. Army Ordnance Test Activity
Yuma Test Station
Yuma, Arizona 1

Commanding General
White Sands Missile Range
Las Cruces, N.M. 1

AD _____ Div. 22

University of Illinois, Dept. of TAM, Urbana, Illinois
ANALYSIS OF MISSILE LAUNCHERS, PART Q
TIPOFF EFFECTS IN HELICAL RAIL LAUNCHERS
by Wesley Hosken, September, 1962, 24 p. incl. illus.
Contract DA-11-070-508-ORD-593, Proj. No. 517-01-002

Contains an analysis of the motion of a four rail helical launcher system including tipoff, that is, the conditions when the front shoes leave the launcher but the rear shoes remain in contact with the guidance rail. The launcher is allowed three degrees of freedom (pitch, yaw and roll).

AD _____ Div. 22

University of Illinois, Dept. of TAM, Urbana, Illinois
ANALYSIS OF MISSILE LAUNCHERS, PART Q
TIPOFF EFFECTS IN HELICAL RAIL LAUNCHERS
by Wesley Hosken, September, 1962 24 p. incl. illus.
Contract DA-11-070-508-ORD-593, Proj. No. 517-01-002

Contains an analysis of the motion of a four rail helical launcher system including tipoff, that is, the conditions when the front shoes leave the launcher but the rear shoes remain in contact with the guidance rail. The launcher is allowed three degrees of freedom (pitch, yaw and roll).

AD _____ Div. 22

University of Illinois, Dept. of TAM, Urbana, Illinois
ANALYSIS OF MISSILE LAUNCHERS, PART Q
TIPOFF EFFECTS IN HELICAL RAIL LAUNCHERS
by Wesley Hosken, September, 1962, 24 p. incl. illus.
Contract DA-11-070-508-ORD-593, Proj. No. 517-01-002

Contains an analysis of the motion of a four rail helical launcher system including tipoff, that is, the conditions when the front shoes leave the launcher but the rear shoes remain in contact with the guidance rail. The launcher is allowed three degrees of freedom (pitch, yaw and roll).

AD _____ Div. 22

University of Illinois, Dept. of TAM, Urbana, Illinois
ANALYSIS OF MISSILE LAUNCHERS, PART Q
TIPOFF EFFECTS IN HELICAL RAIL LAUNCHERS
by Wesley Hosken, September, 1962, 24 p. incl. illus.
Contract DA-11-070-508-ORD-593, Proj. No. 517-01-002

Contains an analysis of the motion of a four rail helical launcher system including tipoff, that is, the conditions when the front shoes leave the launcher but the rear shoes remain in contact with the guidance rail. The launcher is allowed three degrees of freedom (pitch, yaw and roll).

AD _____ Div. 22

University of Illinois, Dept. of TAM, Urbana, Illinois
ANALYSIS OF MISSILE LAUNCHERS, PART Q
TIPOFF EFFECTS IN HELICAL RAIL LAUNCHERS
by Wesley Hosken, September, 1962, 24 p. incl. illus.
Contract DA-11-070-508-ORD-593, Proj. No. 517-01-002

Contains an analysis of the motion of a four rail helical launcher system including tipoff, that is, the conditions when the front shoes leave the launcher but the rear shoes remain in contact with the guidance rail. The launcher is allowed three degrees of freedom (pitch, yaw and roll).

AD _____ Div. 22

University of Illinois, Dept. of TAM, Urbana, Illinois
ANALYSIS OF MISSILE LAUNCHERS, PART Q
TIPOFF EFFECTS IN HELICAL RAIL LAUNCHERS
by Wesley Hosken, September, 1962 24 p. incl. illus.
Contract DA-11-070-508-ORD-593, Proj. No. 517-01-002

Contains an analysis of the motion of a four rail helical launcher system including tipoff, that is, the conditions when the front shoes leave the launcher but the rear shoes remain in contact with the guidance rail. The launcher is allowed three degrees of freedom (pitch, yaw and roll).

AD _____ Div. 22

University of Illinois, Dept. of TAM, Urbana, Illinois
ANALYSIS OF MISSILE LAUNCHERS, PART Q
TIPOFF EFFECTS IN HELICAL RAIL LAUNCHERS
by Wesley Hosken, September, 1962, 24 p. incl. illus.
Contract DA-11-070-508-ORD-593, Proj. No. 517-01-002

Contains an analysis of the motion of a four rail helical launcher system including tipoff, that is, the conditions when the front shoes leave the launcher but the rear shoes remain in contact with the guidance rail. The launcher is allowed three degrees of freedom (pitch, yaw and roll).

AD _____ Div. 22

University of Illinois, Dept. of TAM, Urbana, Illinois
ANALYSIS OF MISSILE LAUNCHERS, PART Q
TIPOFF EFFECTS IN HELICAL RAIL LAUNCHERS
by Wesley Hosken, September, 1962, 24 p. incl. illus.
Contract DA-11-070-508-ORD-593, Proj. No. 517-01-002

Contains an analysis of the motion of a four rail helical launcher system including tipoff, that is, the conditions when the front shoes leave the launcher but the rear shoes remain in contact with the guidance rail. The launcher is allowed three degrees of freedom (pitch, yaw and roll).