AWARD NUMBER: W81XWH-14-1-0113

TITLE: A Modular Set of Mixed Reality Simulators for “blind” and Guided Procedures

PRINCIPAL INVESTIGATOR: Samsun Lampotang

CONTRACTING ORGANIZATION: University of Florida
Gainesville, FL 32611-0001

REPORT DATE: August 2015

TYPE OF REPORT: Annual

PREPARED FOR: U.S. Army Medical Research and Materiel Command
Fort Detrick, Maryland 21702-5012

DISTRIBUTION STATEMENT: Approved for Public Release;
Distribution Unlimited

The views, opinions and/or findings contained in this report are those of the author(s) and should not be construed as an official Department of the Army position, policy or decision unless so designated by other documentation.

REPORT DOCUMENTATION PAGE

Form Approved
OMB No. 0704-0188

Public reporting burden for this collection of information is estimated to average 1 hour per response, including the time for reviewing instructions, searching existing data sources, gathering and maintaining the data needed, and completing and reviewing this collection of information. Send comments regarding this burden estimate or any other aspect of this collection of information, including suggestions for reducing this burden to Department of Defense, Washington Headquarters Services, Directorate for Information Operations and Reports (0704-0188), 1215 Jefferson Davis Highway, Suite 1204, Arlington, VA 22202-4302. Respondents should be aware that notwithstanding any other provision of law, no person shall be subject to any penalty for failing to comply with a collection of information if it does not display a currently valid OMB control number. **PLEASE DO NOT RETURN YOUR FORM TO THE ABOVE ADDRESS.**

1. REPORT DATE
August 2015

2. REPORT TYPE
Annual

3. DATES COVERED
1Aug2014 - 31Jul2015

4. TITLE AND SUBTITLE

A Modular Set of Mixed Reality Simulators for "blind" and Guided Procedures

5a. CONTRACT NUMBER
W81XWH-14-1-0113

5b. GRANT NUMBER
13318017

5c. PROGRAM ELEMENT NUMBER

5d. PROJECT NUMBER

5e. TASK NUMBER

5f. WORK UNIT NUMBER

6. AUTHOR(S)

Samsun Lampotang

E-Mail: slampotang@anest.ufl.edu

7. PERFORMING ORGANIZATION NAME(S) AND ADDRESS(ES)

University of Florida
207 Grinter Hall
Gainesville, FL 32611-0001

8. PERFORMING ORGANIZATION REPORT NUMBER

9. SPONSORING / MONITORING AGENCY NAME(S) AND ADDRESS(ES)

U.S. Army Medical Research and Materiel Command
Fort Detrick, Maryland 21702-5012

10. SPONSOR/MONITOR'S ACRONYM(S)
USAMRMC

11. SPONSOR/MONITOR'S REPORT NUMBER(S)

12. DISTRIBUTION / AVAILABILITY STATEMENT

Approved for Public Release; Distribution Unlimited

13. SUPPLEMENTARY NOTES

14. ABSTRACT

A Phase I Thoracic Regional Anesthesia (RA) mixed simulator has been built, refined, heavily used during Year 1 of grant W81XWH-14-1-0113 at the University of Florida (UF) and the Massachusetts General Hospital for resident and faculty training. It was also extensively demonstrated as a compact, transportable, turnkey system at the WCRAPT (Cape Town, South Africa), IMSH (New Orleans, LA), 3rd Annual Acute Pain Medicine & Regional Anesthesia Conference (Baltimore, MD) and GatorRAP (Gainesville, FL) meetings. The RA simulator is ahead of schedule and ready for preliminary assessment (beta testing) by military medical SMEs and entities. The central venous access (CVA) Phase I simulator is close behind and should also be ready for beta testing by the end of Year 2.

In addition, the real-time, 3D, color visual augmentation in our RA simulator helped a local SME invent a new technique for thoracic paravertebral block (TPVB): the Sagittal Paramedian (SP) Oblique (SP-Oblique TPVB). This innovative development (and possibly a first) of a simulator helping to invent a new technique that is efficacious on patients was submitted on 3/6/15 to the journal *Simulation in Healthcare* for peer-reviewed publication as an Empirical Investigation paper.

We received HRPO approval on 7/31/15 for a learning outcome study that was already approved by the UF IRB02. We formally requested and received approval on 4/22/15 from Mr. Meinberg to replace the FAST trainer in the original proposal with a trainer for transrectal ultrasound (TRUS)-imaged, manually-guided needle biopsy of the prostate that is particularly relevant to the aging male population in the VA Health system.

15. SUBJECT TERMS
Augmented reality procedural simulators, modular, turnkey, austere environments, visual augmentation

16. SECURITY CLASSIFICATION OF:			17. LIMITATION OF ABSTRACT	18. NUMBER OF PAGES	19a. NAME OF RESPONSIBLE PERSON
a. REPORT	b. ABSTRACT	c. THIS PAGE			USAMRMC
U	U	U	UU	13	19b. TELEPHONE NUMBER *(include area code)*

Standard Form 298 (Rev. 8-98)
Prescribed by ANSI Std. Z39.18

Table of Contents

1. Introduction 4

2. Keywords 4

3. Accomplishments 4

4. Impact 8

5. Changes/Problems 8

6. Products 9

7. Participants & Other Collaborating Organizations 10

9. Appendices 12

ANNUAL REPORT

A Modular Set of Mixed Reality Simulators for "Blind" and Guided Procedures

Award W81XWH-14-1-0113

Reporting Period: 8/1/2014 – 7/31/2015 (Year 1)

Author: Samsun (Sem) Lampotang, PhD, PI; slampotang@anest.ufl.edu

This annual report covers only the 3-year (8/1/2014 – 7/31/17) Phase I of award W81XWH-14-1-0113 "A Modular Set of Mixed Reality Simulators for "Blind" and Guided Procedures". It does NOT cover the optional 2-year (8/1/2017 – 7/31/2019) Phase II period.

INTRODUCTION:

We are ultimately developing and delivering a modular set of five mixed reality/augmented reality (AR) simulators, each for a different application from a set of five "blind" and guided medical procedures: (1) Regional Anesthesia (RA), (2) Central Venous Access (CVA), (3) External Ventricular Drain (EVD; aka Ventriculostomy), (4) Chest Tube Insertion and (5) TransRectal UltraSound (TRUS)-Imaged, Manually-Guided Needle Biopsy of the Prostate. The AR is through visual augmentation, i.e., providing 3D, real-time, color visualization of the relevant anatomy, tools and implements. Our purpose is to provide deployed and Stateside medical military personnel and also civilian reservists compact, lightweight, turnkey simulators designed to work in austere environments. These highly-portable/deployable simulators provide the ability to acquire/maintain skills in medical procedures, some of which may be specific to military medicine and therefore unfamiliar to reservists who practice primarily civilian medicine. The ultimate purpose is to provide through the military medical personnel trained via our simulators safer and better quality care (as measured by our proposed patient outcomes study) to US military personnel (deployed and Stateside) and veterans. The scope of this research is deliberately wide; because the simulators are anatomic, they are not specific to military needs and can be readily repurposed for civilian medical training needs too. In addition, the modular nature of the system design (including the modular stand) will provide a rapid development platform for fast prototyping/implementation of new mixed/augmented reality simulators beyond the original five to be delivered to DoD.

KEYWORDS:

Needs assessment, Outcomes studies (learning, behavior, results, RoI), Augmented reality procedural simulators, Mixed reality, Modular, Turnkey, Ultrasound imaging, Visual augmentation

ACCOMPLISHMENTS:

Major Goals and Objectives

The major goals and objectives for Phase I are:

- Needs assessment for a set of 5 mixed reality procedural simulators:
    - Regional Anesthesia (RA)
    - Central Venous Access (CVA)
    - External Ventricular Drain (EVD; aka Ventriculostomy)
    - Chest Tube Insertion
    - Trans Rectal Ultra Sound (TRUS)-Imaged, Manually-Guided Needle Biopsy of the Prostate (exchanged for the FAST trainer with approval from DoD)
- Build/integrate simulated US imaging into modular simulator design
- Design/build/evaluate/refine modular stand that will be common to the 5 different simulators (and other potential future simulators) to be delivered to DoD
- Design 4 outcome studies (based on the Kirkpatrick levels) with UF IRB and also HRPO oversight and approval:
    - Learning (Kirkpatrick Level 2)
    - Transfer to Clinical Practice (Kirkpatrick Level 3)
    - Patient Outcomes (Kirkpatrick Level 4)
    - Return on Investment – ROI ("Kirkpatrick Level 5", aka Kirkpatrick/Phillips)
- Design, build, quality control, deliver to DoD during Phase I:
    - Phase I Regional Anesthesia (RA) simulator
    - Phase I Central Venous Access (CVA) simulator

Accomplishments Relative to Major Goals & Objectives

- Needs assessment has been completed for the RA and CVA simulators. Needs assessment is 70% complete for the EVD simulator and 50% complete for the prostate biopsy simulator. The needs assessment for the chest tube insertion simulator remains to be done.
- Simulated Ultrasound (US) imaging has been implemented and integrated into the modular simulator design. Status: 100% completed and deployed. A simulated US probe was designed to house a 6 DoF tracking magnetic sensor and 3D printed. The simulated US image is generated on-the-fly according to fundamental principles, from the intersection of an insonation plane with the 3D object being insonated to create a 2D cross-section. A virtual representation of the US probe was also created in the 3D visualization; a thin red sheet emanating from the long axis

midline of the US probe represents the insonation plane and makes the invisible insonation plane visible in the 3D visualization. Pressure sensors (actually force sensitive resistors, FSRs) are placed on the face of the simulated US probe and help to determine how hard the user is pressing the US probe onto the skin. Based on the applied pressure/force, collapsible structures such as veins are seen to deform in the simulated US image and also in the 3D visualization. In addition, anisotropy was implemented in the simulated US image. Anisotropy is the property where depending on the angle of incidence of the insonation to the surface being insonated all or most of the US energy bounces away from, instead of back towards the probe, rendering objects that are in the insonation plane "invisible" or degrading their image in the simulated US image. The online video at http://simulation.health.ufl.edu/research/ra_sim.wmv shows how simulated ultrasound (US) imaging has been implemented and integrated into the modular AR simulator design. See for example the video frames from 0:09 to 0:15. The simulated US image can occupy the entire screen or be combined with a 3D, color, real-time visualization. Anisotropy can be toggled on or off via the simulator user interface (UI) implemented on a right hand column on the screen of the laptop computer. Anisotropy can be readily turned off when using the simulator in "training wheels" mode with novices.

- A modular stand has been successfully designed, built and demonstrated at multiple venues and meetings. Status: 100% completed and deployed. See photo in Figure 1 below that shows a completed modular stand with a modular upper thorax anatomical block installed. Figures 2a – 2c show CAD drawings of 3 other anatomical blocks that will mount onto the modular stand. Figure 2d shows the modular stand by itself. The modular stand holds a tracker unit at the bottom. The anatomical module base has a mechanical indexing groove that indexes and registers the anatomical block to the tracker on the underside of the modular stand. The legs of the modular stand fold for compact packing in its mil spec padded transport case (Thermodyne).

Figure 1. The modular stand is on the right of the photo. It is shown in the thoracic regional anesthesia simulator configuration, i.e., with an RA anatomical module representing the posterior upper thorax snapped and indexed into the modular stand. Thoracic paravertebral blocks (TPVBs) and other regional

anesthesia techniques can be practiced, acquired and maintained via this completed RA simulator. Towards the middle of the photo, the tool tray (black sponge with precision cutouts for holding tracked tools) includes the simulated ultrasound (US) probe on the right (off white color). A Tangible User Interface (TUI) for controlling the virtual camera is in the middle of the sponge tray (white rectangle with blue button). The TUI is fitted with a 6 DoF sensor that allows the virtual camera to be intuitively controlled by the user along 6 DoF. The blue button when pressed makes the virtual camera follow the TUI in space as the TUI is moved by the user. The user observes the 3D visualization on the laptop computer screen in real time to control the virtual camera position. When the user is satisfied with the virtual camera position, i.e., the perspective of the 3D visualization, the blue button on the TUI is released. On the left of the tool tray, three items are placed horizontally. The top item is a tracked needle encased in a protective sheath to protect users from its sharp tip. In the middle is a syringe for sue with the needle. At the bottom is a marker pen that is used to mark the simulated skin when using US imaging assistance. At the left of the picture is a generic laptop (Acer) purchased at Best Buy with standard CPU, RAM, video RAM and graphics card (i.e., not a high end laptop)

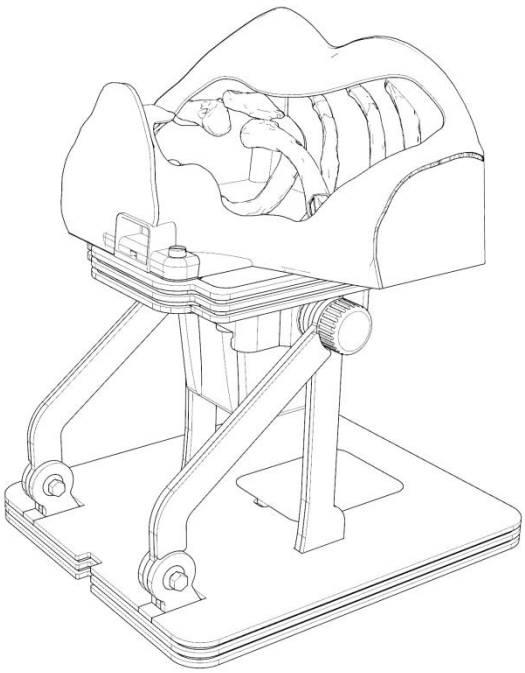

Figure 2a. CVA Module on Modular Stand with Quick Release Device

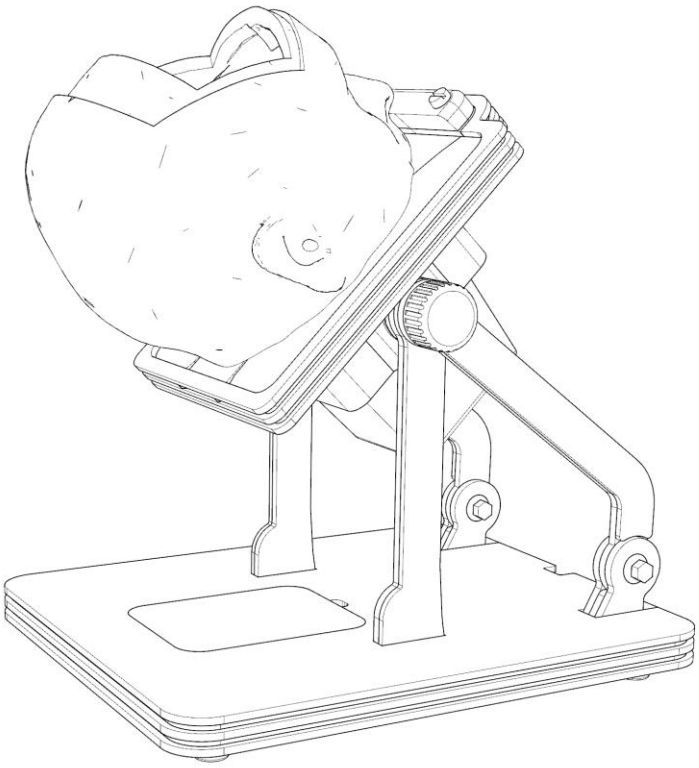

Figure 2b. External Ventricular Drain (EVD; a.k.a. ventriculostomy) Module on Modular Stand

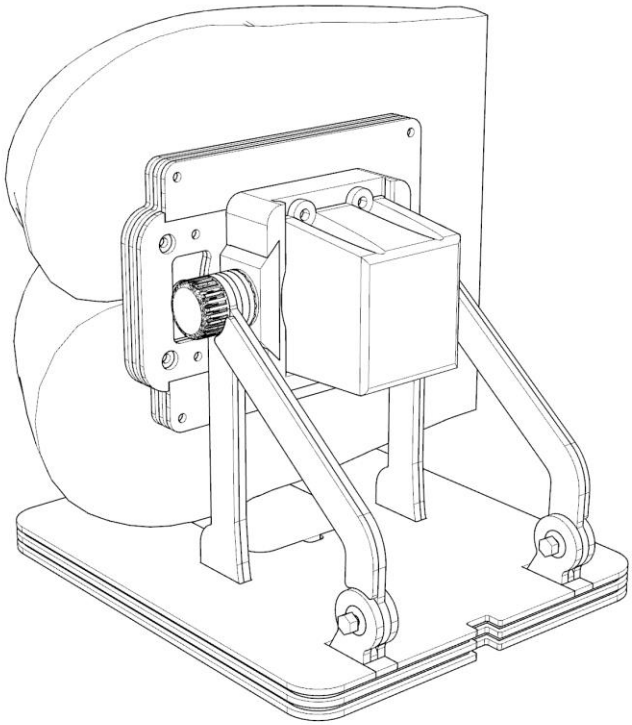

Figure 2c. TRUS-Guided Manual Prostate Biopsy Module on Modular Stand with Quick Release Device

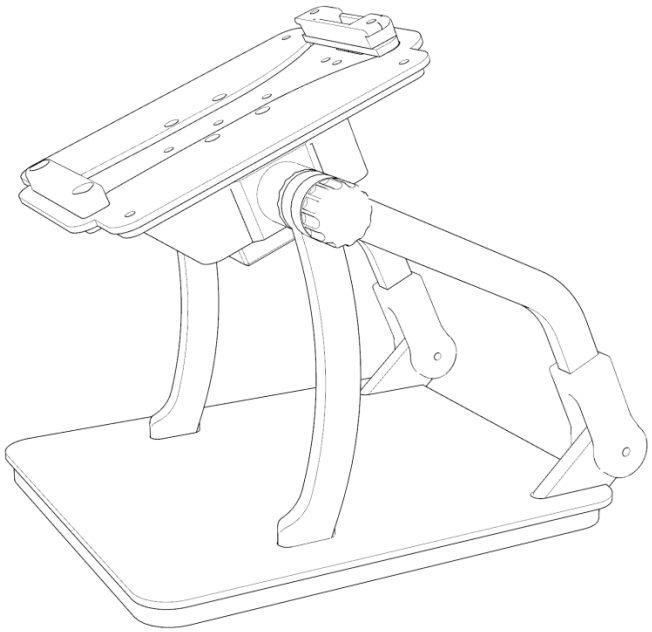

Figure 2d. The modular stand without an anatomical block and the indexing groove visible.

- Outcome studies
    - UF IRB02 Approval Number 2014-U-0658: A learning outcome study for the RA simulator that investigates whether training with the RA simulator affects skill in performing thoracic paravertebral blocks (TPVB) had already been approved by UF IRB 02 prior to the 8/1/14 start of award W81XWH-14-1-0113 and was subsequently also approved by HRPO on 7/31/15.
    - UF IRB02 Approval Number 2015-U-672: A second learning outcome study that will investigate whether training with the RA simulator affects skill in performing a modified thoracic paravertebral block (Sagittal Paramedian Oblique TPVB) was approved by UF IRB 02 and is currently being reviewed by HRPO. The modified TPVB technique is depicted in Figure 3 below and was presented at the American Society of Anesthesiologists October 2015 annual meeting in San Diego, CA. *Ihnatsenka B, Le-Wendling L, Coleman CJ, Lizdas DE, Lampotang S: A mixed reality simulator augmented with real-time 3D visualization helps develop a modified thoracic paravertebral block*

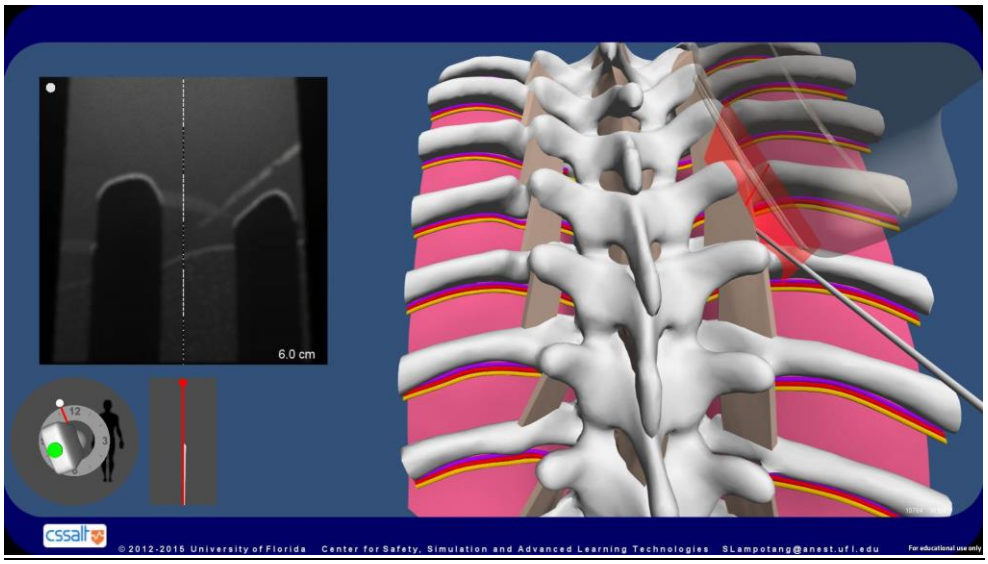

Figure 3. The development of a modified thoracic paravertebral block (TPVB) technique was facilitated by the 3D visual augmentation (visualization) provided by the simulator. The tracked needle is seen in the gray scale simulated US image at the top left of the figure. The two ribs cast dark shadows. The ligament is visible on top of the lung (both structures span the two ribs) in the simulated ultrasound image. The 3D visualization is on the right of the picture and its perspective is controlled by the user or instructor via a virtual camera TUI. A phantom of the US probe based on the actual 6 DoF position of the simulated and tracked physical US probe is also visible in the 3D visualization.

- UF IRB02 Approval Number **2013**-U-1025: A third learning outcome study for the CVA simulator was approved by UF IRB02 (Appended at end of report). This third study investigates whether training with the CVA simulator affects skill in central venous access via three different approaches: (a) the internal jugular, (b) the subclavian and (c) the supraclavicular. We were informed that our proposal to DoD had been awarded in October 2013 but were instructed not to assume we would actually receive the funds until we received formal written notification that we could start working on the grant. Written authorization was eventually obtained to formally start work on August 1, 2014 on the DoD grant. We did not have clear line of sight in the first half of 2014 regarding when the DoD Grant would officially start and subsequently trigger the need for HRPO approval. Given that we already had UF IRB02 oversight and approval, we enrolled consenting participants and started the study prior to 8/1/2014, the start date of award W81XWH-14-1-0113. We started the study without DoD secondary level review from HRPO because at the time we did not need such HRPO oversight and approval since we were not yet officially funded by DoD.

- We have started the process of reconfiguring the entry fields in our Electronic Medical Record (EPIC) to allow us to collect data regarding central venous access procedures and associated complications such as inadvertent pneumothorax and arterial puncture for the Phase II patient outcome studies.

- The Phase I RA simulator is ready (ahead of schedule) for beta testing by military medical institutions and subject matter experts (SMEs). Status: 100% complete. See the online video at http://simulation.health.ufl.edu/research/ra_sim.wmv
- The Phase I CVA simulator will be ready by the end of Year 2 (also ahead of schedule) for beta testing by military medical institutions and SMEs. Status: 60% completed; ahead of schedule.

Opportunities Provided for Training and Professional Development

The Phase I Thoracic Regional Anesthesia (RA) mixed simulator was used during Year 1 of grant W81XWH-14-1-0113 at the University of Florida (UF) (approximately on 5 occasions) and the Massachusetts General Hospital (three times: 5/12-17/2014; 2/4/15; 5/20/15) for resident and faculty training. It was also extensively demonstrated as a compact, transportable, turnkey system at the World Congress of Regional Anesthesia and Pain Therapy (WCRAPT, Cape Town, South Africa, November 23-28, 2014), in the Government Corral at the International Meeting on Simulation in Healthcare (IMSH, New Orleans, LA, January 11-13, 2015), 3rd Annual Acute Pain Medicine & Regional Anesthesia Conference (Baltimore, MD, February 14-15, 2015) and GatorRAP (Gainesville, FL, February 21, 2015) meetings. The GatorRAP 2-day workshop focuses on regional anesthesia techniques and makes use of cadavers, live animal models, live human models and part task trainers including our simulators; the audience includes practitioners of regional anesthesia for human and veterinary medicine. Our simulators (2 RA simulators and one cross-sectional literacy trainer) were well received by both audiences. During WCRAPT, our RA simulator was also used extensively (3 days) at the University of Stellenbosch Tygerberg campus for hands-on workshops and also at the Cape Town International Convention Centre.

Our CVA simulator was used with IRB 02 approval (2013-U-1025) and informed consent by 76 study participants at the University of Florida allowing them to become more familiar with the relevant anatomy, strategy, techniques and approaches for CVA as well as the physics and anomalies of ultrasound imaging. The breakdown of the 76 participants trained in Central Venous Access via our CVA simulator is as follows:

- 6 Anesthesia Faculty members
- 1 Anesthesia Attending
- 14 Interns/PGY1 (Post Graduate Year 1)
- 10 CA1/PGY2 (Clinical Anesthesia Year 1/ Post Graduate Year 2)
- 16 CA2/PGY3 (Clinical Anesthesia Year 2/ Post Graduate Year 3)
- 13 CA3/PGY4 (Clinical Anesthesia Year 3/ Post Graduate Year 4)
- 7 Fellows/PGY5 (Post Graduate Year 5)
- 6 CRNAs (Certified Registered Nurse Anesthetists)
- 3 Medical Students

Dissemination to Communities of Interest

Results were disseminated via the demonstrations, meetings and workshops described above. In addition, the simulators are an integral part of demonstrations we conduct on a regular basis for our simulation center visitors that include high school students, STEM programs and science programs for high school students, programs for minority and under-represented students, medical school applicants, residency program applicants, visiting professors, medical industry executives and engineers and educators including high school science teachers.

In addition, the real-time, 3D, color visual augmentation in our RA simulator helped a local RA and thoracic paravertebral block (TPVB) SME invent a new technique for TPVB: the Sagittal Paramedian (SP) Oblique (SP-Oblique TPVB). This innovative development (and possibly a first) of a simulator helping to invent a new technique that is efficacious on patients was submitted on 3/6/15 to the journal *Simulation in Healthcare* for peer-reviewed publication as an Empirical Investigation paper. The paper received generally positive reviews; the editor has suggested splitting the paper (which did contain a lot of information) into three peer-reviewed publications.

Plan for Next Reporting Period to Meet Goals & Objectives

- We will finalize the patient outcomes study. We plan to submit an IRB01 (much more challenging and time-consuming than an IRB02) application in year 2 in anticipation of the patient outcomes study. Our goal is to obtain IRB01 approval by August 2016 so that we can start collecting and doing preliminary analyses on pre-intervention patient and complication data related to CVA.
- We plan to complete the needs assessment for the EVD, prostate biopsy and chest tube insertion simulator in 2016.
- To better engage our subcontractor, the US Army Research Laboratory's Simulation and Training Technology Center (STTC), we will explore delegating at least the entire needs assessment for the chest tube insertion trainer to STTC. This will include:
    - a survey of military medical institutes and chest tube insertion SMEs to develop a needs assessment document for a chest tube insertion simulator
    - a prioritized list of learning objectives for a chest tube insertion trainer and
    - a survey of existing, commercially available chest tube insertion trainers and any gaps in their capabilities relative to the DoD's military medical needs.
- We will refine the current modular stand design to allow for more rotation and faster physical swapping (< 1 minute) of anatomic modules.
- We will start to design the transfer of practice and ROI outcomes studies.
- We will reformat/downsize the anatomic module for the CVA simulator so that it fits on the redesigned/enhanced modular stand. We will design and submit a learning outcome study to UF IRB 02 and HRPO for a study of the reduced/modular format CVA simulator.

IMPACT:

The modularity of the modular stand allowed us to readily implement a cross-sectional literacy trainer that was exhibited together with our RA and CVA simulators at the Government Corral at IMSH in New Orleans, LA from January 11 to 13, 2015. The cross-sectional trainer has been extremely well received by practicing clinicians and medical and physician assistant students alike. It has sensitized medical educators and instructors to the fact that the fundamentals of cross-sectional literacy have been shortchanged, if addressed at all, in most healthcare curricula. Cross-sectional literacy underpins the ability of clinicians to interpret imaging modalities such as ultrasound imaging that produce 2D cross-sections out of 3D objects and to use ultrasound guidance to safely steer needles to their intended targets. The cross-sectional literacy trainer is intentionally devoid of anatomy and is thus procedure-agnostic. It will be applicable to all medical and healthcare disciplines where medical imaging that

produces 2D cross-sections (such as ultrasound imaging) are produced. While the cross-sectional literacy and ultrasonography skills trainer is a spin-off of our DoD research and facilitated by the availability of the modular stand, we are not sure whether we need to continue reporting on this technology/application in future reports as part of the DoD grant, since our formal request to swap the cross-sectional literacy trainer for the chest tube insertion trainer was denied. See http://simulation.health.ufl.edu/research/US_Trainer_Demo_Video.wmv.

CHANGES/PROBLEMS:

Change of Deliverable (approved by DoD on 4/22/15)

We made a formal written request to replace the proposed Focused Assessment with Sonography of Trauma (FAST) trainer in the original proposal with a mixed reality simulator for TransRectal UltraSound (TRUS)-imaged, manually-guided needle biopsy of the prostate. This request was made because the accuracy and uniform distribution of sampling during TRUS-imaged, manually-guided prostate needle biopsy trainer is poor, an undesirable state of current practice that is particularly relevant to the aging male population in the VA Health system and therefore to the DoD and also for the aging general male civilian population at large. Our request to replace the FAST trainer with the prostate biopsy trainer received approval via an email from Mr. Meinberg on 4/22/15.

While the change to a prostate biopsy simulator will most impact Phase II deliverables to DoD, it will also impact Phase I deliverables because, as a result, we will, in Phase I, conduct needs assessment for the prostate biopsy trainer, not for the FAST trainer.

The real-time, 3D, color visual augmentation in our RA simulator helped our regional anesthesia SME invent a new technique for thoracic paravertebral block (TPVB): the Sagittal Paramedian (SP) Oblique (SP-Oblique TPVB). This technique developed via an anatomically correct simulator with visual augmentation has been tried on patients and found to be efficacious.

PRODUCTS:

- Lampotang S, Lizdas DE, Ihnatsenka B: Basics of US in RA. *Proceedings of the World Congress of Regional Anesthesia and Pain Therapy* (WCRAPT), 2014
- Lampotang S, Lizdas DE, Ihnatsenka B: A mixed reality simulator of thoracic RA. *Proceedings of the World Congress of Regional Anesthesia and Pain Therapy* (WCRAPT), 2014
- Lampotang S, Le-Wendling L, Coleman CJ, Lizdas DE, Ihnatsenka BI: Real-time 3D visualization in a mixed simulator helps develop a modified regional anesthesia technique. Submitted 3/6/15 to *Simulation in Healthcare*; favorable review received 5/20/15; need to split manuscript into 3 publications; acknowledgement of federal support (yes).
- Ihnatsenka B, Le-Wendling L, Coleman CJ, Lizdas DE, Lampotang S: A mixed reality simulator augmented with real-time 3D visualization helps develop a modified thoracic paravertebral block, Submitted 4/6/15 to *American Society of Anesthesiologists (ASA) 2015 annual meeting*; accepted 6/18/15 for poster presentation http://www.asaabstracts.com/strands/asaabstracts/printAbstract.htm;jsessionid=698B518CD51AFF97B17E7A229AA125D0?index=0&year=2015&absnum=4398&type=search

- Lampotang S, Lizdas DE, Cooper LA, Gravenstein N, Ihnatsenka B: A cross-sectional literacy and ultrasound skills trainer. Scientific & Educational Exhibit submitted 4/6/15 to *American Society of Anesthesiologists 2015 annual meeting*; accepted for presentation as a Scientific & Educational Exhibit on 3 consecutive days (10/24-10/26/2015) at the San Diego Convention Center
- Lampotang S, Lizdas DE, Cooper LA, Gravenstein N, Robinson A: Mixed Reality Simulation for Training Reservists and Military Medical Personnel in Subclavian Central Venous Access, submitted 4/7/15 to *Military Health System Research Symposium (MHSRS);* presented by Samsun Lampotang, PhD as a poster at the Military Health System Research Symposium (MHSRS) on 8/19/2015, Marriott Hotel, Ft. Lauderdale, FL
- Lampotang, Lizdas, Ihnatsenka: A mixed reality simulator of thoracic regional anesthesia. Exhibited at UF BME PhD Recruitment day (2/20/15)
- Ihnatsenka B, Le-Wendling L, Coleman CJ, Lizdas DE, Lampotang S: A mixed reality simulator augmented with real-time 3D visualization helps develop a modified thoracic paravertebral block. Exhibited at *Dept. of Anesthesiology Celebration of Research* (4/29/15)
- Lampotang S, Lizdas DE, Cooper LA, Gravenstein N, Ihnatsenka B: A cross-sectional literacy and ultrasound skills trainer. Exhibited at *Dept. of Anesthesiology Celebration of Research* (4/29/15) – Oral presentation
- 3rd place award for oral presentation of "A cross-sectional literacy and ultrasound skills trainer" at the *University of Florida Anesthesiology Department's Celebration of Research* 4/29/15
- Lampotang S, Lizdas DE, Cooper LA, Gravenstein N, Robinson A: Mixed Reality Simulation for Training Reservists and Military Medical Personnel in Subclavian Central Venous Access. Exhibited at *Dept. of Anesthesiology Celebration of Research* (4/29/15)

- A video of the new RA simulator design was uploaded to the web at http://simulation.health.ufl.edu/research/ra_sim.wmv
- A modified technique for US-guided thoracic paravertebral block (TPVB), the Sagittal Paramedian Oblique technique was developed with the help of the 3D visualization in the RA simulator; a peer-reviewed Empirical Investigation paper was submitted on 3/6/15 to the journal *Simulation in Healthcare* to describe this potential first in simulation
- A US provisional patent application: Lampotang, Lizdas, Ihnatsenka: "Simulation Features Combining Mixed Reality and Modular Tracking" was filed on 1/10/15 and assigned Serial No. 62/101,997 UF.1220P (UF#15508) prior to the Government Corral exhibit at IMSH in New Orleans. This patent application served two purposes: protect UF intellectual property (IP) before public disclosure at the Government Corral and establish the IP that was already in UF's possession before the 8/1/2014 start of the DoD funding.
- A mixed reality cross-sectional literacy and ultrasonography skills trainer was developed as a proof of concept of the flexibility and rapid development platform made possible by a modular stand design with an imbedded tracker. The trainer was exhibited at the Government Corral at IMSH in New Orleans (January 11-13, 2015). The cross-sectional literacy trainer has been accepted as a Scientific & Educational exhibit and will be exhibited on 3 consecutive days (10/24-26/2015) at the October 2015 Annual Meeting of the American Society of Anesthesiologists in San Diego, CA.

Presentations:

- Lampotang: "Basics of US in Regional Anesthesia" lecture, World Congress of Regional Anesthesia and Pain Therapy, Cape Town International Convention Centre, Cape Town, Republic of South Africa, 11/25/14
- Ihnatsenka, Yasimovich, Lampotang: Workshop using UF Regional Anesthesia simulator at Tygerberg Campus of the University of Stellenbosch, Cape Town, RSA, 11/25/14
- Lampotang: "A mixed simulator of thoracic regional anesthesia" lecture, World Congress of Regional Anesthesia and Pain Therapy, Cape Town International Convention Centre, Cape Town, Republic of South Africa, 11/26/14
- Lampotang, Lizdas: Government Corral exhibit, International Meeting on Simulation in Healthcare, Ernest Morial Convention Center, New Orleans, LA, Jan 2015
- David Edwards, MD: RA simulator used at 3 different Harvard workshops at MGH (5/12-17/2014, 2/4/15 **and** 5/20/15)
- Patrick Tighe, MD: Hands-on demonstration of the Regional Anesthesia simulator at the 3rd Annual Acute Pain Medicine and Regional Anesthesia Course, Baltimore, MD, February 14-15, 2015
- Lampotang, Lizdas: GatorRAP workshop hands-on session 2/21/15
- Lampotang: "A Mixed reality simulator for Cross-Sectional/Ultrasound literacy" lecture, GatorRAP, Gainesville, FL, 2/22/15
- Barys Ihnatsenka, MD: lecture, 40th Annual meeting of the American Society of Regional Anesthesia, Las Vegas, NV, 5/16/15
- Lampotang: Hands-on workshop with RA and cross-sectional literacy trainers. Geisinger Health System, Danville, PA 6/3/2015

PARTICIPANTS & OTHER COLLABORATING ORGANIZATIONS:

David Edwards, MD, an assistant professor at Massachusetts General Hospital (MGH) borrowed our RA simulator for 3 separate mandatory faculty training sessions at MGH (5/12-17/2014; 2/4/15; 5/20/15)

Ascension/NDI is the supplier of the trackers and miniature magnetic 6 DoF sensors used in our mixed reality simulators. Their technical staff provided us with assistance when we had technical questions and extended loan of their latest products for evaluation. Our close working relationship with Ascension/NDI is a win-win synergy. We are supplied with the latest products and line of sight of products in the pipeline. In turn, our research is a show case of what can be accomplished with Ascension/NDI products. As an example, Ascension invited us to exhibit our RA simulator at Ascension's booth at IMSH in January 2015.

The US Army Research Laboratory's Simulation and Training Technology Center (STTC) is a sub-contractor on the award.

Yr1Q4 Quad Chart is included as an Appendix

INTERIM PROGRESS REVIEW

The PI, Samsun Lampotang, PhD, travelled to Ft. Detrick, MD to present, in person, progress on award W81XWH-14-1-0113 at an In Progress Review on 8/11/2015. As a result, the technical progress report for Quarter 4 is not included in this report because presentation at the IPR waives the need for the Q4 technical progress report.

PUBLICATION, ACKNOWLEDGEMENT, AND PUBLIC RELEASE

The required and relevant annotation was added to publications except in cases where the limited amount of words allowed for abstracts precluded the boilerplate language from being added. We obtained written permission from the program officer in those instances to omit the boilerplate text because of word count restrictions.