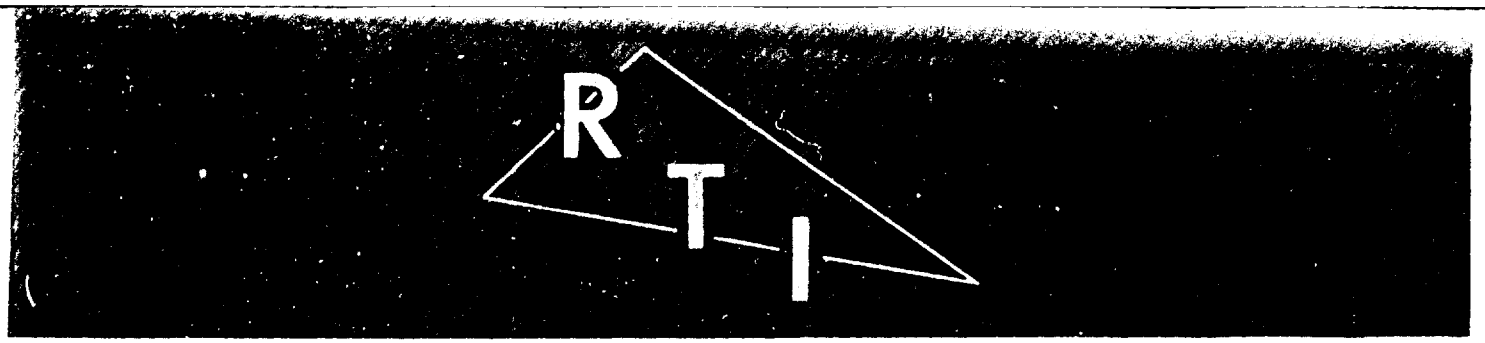

AD624701

Operations Research and Economics Division

SENSITIVITY ANALYSIS OF CIVIL DEFENSE SYSTEMS AND COMPONENTS

FINAL REPORT VOLUME I

R-OU-157

A COST-EFFECTIVENESS COMPUTER PROCEDURE FOR OPTIMUM ALLOCATION OF FALLOUT SHELTER SYSTEM FUNDS UNDER UNIFORM OR VARIABLE RISK ASSUMPTIONS

CLEARINGHOUSE
FOR FEDERAL SCIENTIFIC AND
TECHNICAL INFORMATION
Hardcopy Microfiche
$3.00 $0.75 88 pp
ARCHIVE COPY

Prepared for

Office of Civil Defense
United States Department of the Army
under
Office of Civil Defense Contract No. OCD-PS-64-56
OCD Subtask 4113E
RTI Project OU-157

RTI RESEARCH TRIANGLE INSTITUTE · DURHAM, NORTH CAROLINA

THE RESEARCH TRIANGLE INSTITUTE

Operations Research and Economics Division

OCD Review Notice

This report has been reviewed in the Office of Civil Defense and approved for publication. Approval does not signify that the contents necessarily reflect the views and policies of the Office of Civil Defense.

Distribution of this document is unlimited.

RESEARCH TRIANGLE INSTITUTE
Durham, North Carolina

FINAL REPORT VOLUME I

R-OU-157

A Cost/Effectiveness Computer Procedure for Optimum Allocation of Fallout Shelter System Funds Under Uniform or Variable Risk Assumptions

by

Floyd M. Guess

October 1, 1965

Prepared for

Office of Civil Defense
United States Department of the Army
under
Office of Civil Defense Contract No. OCD-PS-64-56
OCD Subtask 4113E
RTI Project OU-157

FINAL REPORT VOLUME I

R-OU-157

A Cost/Effectiveness Computer Procedure for Optimum Allocation of Fallout Shelter System Funds Under Uniform or Variable Risk Assumptions

Prepared for

Office of Civil Defense
United States Department of the Army
under
Office of Civil Defense Contract No. OCD-PS-64-56
OCD Subtask 4113E
RTI Project OU-157

by

Floyd M. Guess

RESEARCH TRIANGLE INSTITUTE
Operations Research and Economics Division
Post Office Box 490
Durham, North Carolina

Approved by:

Edgar A. Parsons, Director

R. S. Titchen, Deputy Director

1 October 1965

FOREWORD

This is Volume I of three separately bound volumes in which are reported the research completed under the general terms of the Office of Civil Defense Subtask Number 4113E, "Sensitivity Analysis of Civil Defense Systems and Components."

The research of the authors was very ably supported by Mrs. Helen Anderson and Miss Mary B. Woodside. Mrs. Anderson is credited with the programming reported in Appendix D, "The Risk-Oriented Allocation Program." Miss Woodside performed the calculations reported in several of the Appendixes. Philip McMullan and Robert Brooks are acknowledged for their valuable assistance in the preparation of the final report.

ABSTRACT

The dynamics of civil defense planning and systems evaluation require a procedure that yields approximate answers to questions concerning effective fallout shelter improvement programs. To accomplish this, a computerized model for the CDC 3600 is developed and demonstrated for OCD Region 6. The model permits an evaluation of shelter improvement programs against any fallout environment, but it is particularly valuable when RISK-type expressions of the probable fallout environment are used as inputs. Using detailed data from the National Fallout Shelter Survey and equally detailed estimates of the probable fallout hazard in a small area (counties, in the demonstration), the extent to which an area's population is inadequately protected is determined. Fallout shelter system funds are then allocated to areas of need in an optimal manner. The allocation employs shelter cost data obtained from Phase 2 of the National Fallout Shelter Survey on ventilation and shielding improvements. Estimated costs for package ventilation (PKV) and shelter in new construction are also employed in the demonstration in OCD Region 6. In all, 14 cost studies are run, using selected combinations of the budget level, the fallout risk level, etc. The demonstration shows the practicability of carrying out such large-scale cost/effectiveness analyses. It demonstrates a great need for reliable input data--particularly for the unit costs and available numbers and improvement options. The model and associated computer program not only provide tools of great value to the decision-maker, but they also emphasize the criticality of his assessment of factors within and outside the model (e.g., planning horizon, impact of future changes in the expected attack environment, legacy value of existing shelter programs, etc.). Future work includes extending the model to include direct effects and performing more extensive demonstrations of the model.

TABLE OF CONTENTS

		Page
FOREWORD		iii
ABSTRACT		v
TABLE OF CONTENTS		vii
LIST OF TABLES		ix
LIST OF FIGURES		xi
I.	INTRODUCTION	1
II.	GENERAL DESCRIPTION OF MODEL	2
III.	APPLICATION OF THE MODEL TO A CIVIL DEFENSE REGION	3
	A. General	3
	B. Allocation of Shelter Spaces	3
	C. Selection of Level of Risk	4
	D. Determination of Effective Shelter Spaces	4
	E. Determination of Cost for Shelter Improvement	5
	F. Cost for New Shelter	6
	G. Allocation of Funds	6
	H. Variations in Input Data	7
IV.	RESULTS	8
V.	ANALYSIS OF RESULTS	11
	A. Relationship of Costs and Level of Risk	11
	B. Limitations of Phase 2 Data	13
	C. Effect of Inclusion of Residential Basements in Shelter Data	14
	D. Effect of Revised Protection Factors	14

TABLE OF CONTENTS (CONTINUED)

		Page
E.	Effect of Reduced Cost for Ventilation	16
F.	Effect of Overcrowding of Shelters	17
VI.	CONCLUSIONS AND RECOMMENDATIONS	17
A.	Introduction	17
B.	The Introduction of Prompt Effects into the Model	18
C.	Application of the Methodology to Shelter System Programming	22
D.	Critical Decisions in Risk-Oriented Programming	23
REFERENCES TO VOLUME I		25
Appendix A -	The Algorithm for Allocating CD Fallout Shelter Funds	A-1
Appendix B -	Relationship Between Population Inadequately Sheltered and Casualties	B-1
Appendix C -	State Summaries of Case Studies Using the Risk-Oriented Allocation Program	C-1
Appendix D -	The Risk-Oriented Allocation Program	D-1

LIST OF TABLES

Table		Page
I	Existing Fallout Shelter Spaces and Spaces Improvable by Shielding and Ventilation	7
II	Shelter Type, Protection Factor, and Revised Protection Factor	8
III	Illustrative Risk-Oriented Shelter Budget Allocation	9
IV	Regional Summary of Case Studies Using the Risk-Oriented Allocation Program	10
V	Effect of Possible Bias in Existing Structure PF Estimates at Two Maximum Allowable ERD Levels	14
VI	Comparison of Effect of 25 Percent Overcrowding (95 percent risk level, Max ERD = 100r)	17
VII	Categorization of Shelters by Vulnerability Index (VI) and Protection Factor (PF)	20
C-I	State Summary of Case Studies Using the Risk-Oriented Allocation Program (State 1)	C-2
C-II	State Summary of Case Studies Using the Risk-Oriented Allocation Program (State 2)	C-3
C-III	State Summary of Case Studies Using the Risk-Oriented Allocation Program (State 3)	C-4
C-IV	State Summary of Case Studies Using the Risk-Oriented Allocation Program (State 4)	C-5
C-V	State Summary of Case Studies Using the Risk-Oriented Allocation Program (State 5)	C-6
C-VI	State Summary of Case Studies Using the Risk-Oriented Allocation Program (State 6)	C-7
C-VII	State Summary of Case Studies Using the Risk-Oriented Allocation Program (State 7)	C-8
C-VIII	State Summary of Case Studies Using the Risk-Oriented Allocation Program (State 8)	C-9
D-I	Illustration of Input Data	D-2
D-II	Illustrative Risk-Oriented Shelter Budget Allocation	D-5

LIST OF FIGURES

Figure		Page
1	Cumulative Probability Distribution of Unshielded ERD in a Geographic Area	5
2	Cost-Effectiveness Curves for Expenditures for Fallout Protection in Region 6 at the 50 and 95 Percent Levels of Risk	12
3	Budget Level vs. Population Ineffectively Sheltered at Two Levels of Risk	14
4	The Percentage Reduction in Population Ineffectively Sheltered Through the Use of Residential Basements at the 50 Percent and 95 Percent Levels or Risk	15
5	Budget Level vs. Population Ineffectively Sheltered Under Stated Levels of Allowable ERD-Max and Protection Factors	16
A-1	Cost/Effectiveness Curves by Area	A-1

A Cost/Effectiveness Computer Procedure for Optimum Allocation of Fallout Shelter System Funds Under Uniform or Variable Risk Assumptions

I. INTRODUCTION

The dynamics of civil defense planning and systems evaluation require a procedure that will readily yield approximate answers to such questions as:

(1) How many lives could be saved with an expenditure of $1 billion, $5 billion, $15 billion, or any other arbitrary budget level?

(2) Where should such budgets be expended--by regions, states, metropolitan areas, counties, and detailed locations--for each assumed budget level?

(3) How and where would the expenditure pattern vary if one assumed that all parts of the United States were subject to a uniform attack hazard--to a different attack hazard?

(4) What is the dollar-costing relationship between attack hazard, casualties, and standards of acceptable shelter?

Our approach has been to develop and demonstrate a computerized procedure that will answer these and related questions under the following constraints:

(1) Use available data, such as the NFSS and National Location Code, wherever feasible.

(2) Use existing computers, programs, and planning techniques used by OCD, such as RISK or NAHICUS, wherever feasible.

(3) Provide means for readily accepting new or improved data, and for using interim estimates where critical data deficiencies exist.

(4) Concentrate initially on cost and effectiveness of a fallout shelter system, but include provision for extending the system to blast and other prompt effects considerations.

(5) Provide means for accepting data on all civil defense subsystems of measurable significance.

In the event of a nuclear attack upon the United States, some areas may be assumed to have a higher probability than others of experiencing hazardous levels of fallout; such an assumption may provide a priority basis for the allocation of funds for improving the fallout shelters system. Allocation of funds on this basis can be said to be "risk-oriented". No presumption is made of OCD acceptance of a "risk-oriented" policy for allocating funds. However, it is suggested that such an approach will be useful in determining optimal fund allocations against which existing and future plans may be evaluated.

In this volume, a risk-oriented procedure for evaluating the effectiveness of a spectrum of alternative budgets for fallout shelter system improvement is described and applied to a specific region of the United States. The effects of variations in the options that are available to decision-makers, and other inputs to the allocation procedure, are analyzed. Extension of the allocation procedure from fallout shelter system costs to blast protection and other CD system costs is also discussed.

II. GENERAL DESCRIPTION OF MODEL

The general procedure for cost/effectiveness evaluation of fallout shelter system budgets advanced here is as follows:

(1) The populations of given geographic areas are assigned to existing shelter spaces within their respective areas (standard location, county, or other area), always utilizing all of the higher PF (Protection Factor) shelters first.

(2) On the basis of one or more fallout environments, determined by probabilistic programs such as RISK II [Reference 1], the estimated Equivalent Residual Dose (ERD) for the occupants of each type of shelter is calculated.

(3) Spaces are considered effective in which the resultant Maximum ERD is below a predetermined level (e.g., 200r). Areas in which some or all of the population are not effectively sheltered become eligible, for computation purposes, for funds for improved or new shelters. (In this report "improved" shelter spaces are those indicated in the Phase 2 NFSS data to be improvable by ventilation or shielding.)

(4) The specific costs for possible ways of converting ineffective shelter spaces into effective shelter spaces are determined for each of the areas under consideration. Data from Phase 2 of the National Fallout Shelter Survey provide such information. Estimated costs for creating new

effective shelter spaces are utilized also.

(5) Funds for improved and/or new shelters are allocated to areas having ineffective spaces; funds are provided first for the least costly alternative for adding effective shelter spaces, regardless of the area in which the alternative exists. The process of moving to the next least costly alternative continues until all of the assumed budget is expended, or until all possible alternatives for improving existing shelters are exhausted.

(6) The computer program and model are flexible and versatile. At the option of the decision-maker, the following inputs may be varied: (a) budget level, (b) degree of risk or hazard, (c) definition of acceptable shelter, and (d) new shelter construction costs.

This procedure maximizes the number of shelter spaces that can be made effective for a given amount of money and for an established level of fallout radiation. The effects of changing the level of fallout radiation on the optimal allocation of funds will be considered in Section V of this volume. The possibility of adapting this fallout shelter system cost allocation procedure to include planning for direct weapons effects will be described in Section VI.

III. APPLICATION OF THE MODEL TO A CIVIL DEFENSE REGION

A. General

For demonstration purposes, a risk-oriented method of allocating funds was applied to OCD Region 6, using the National Fallout Shelter Survey data. A CDC 3600 computer was used to perform the various allocation calculations. The mathematical formulation is given in Appendix A. A description of the computer program is given in Appendix D.

B. Allocation of Shelter Spaces

The fallout shelter status in the eight states of Region 6 was determined from Phase 2 data of the NFSS. The basis for allocation of shelter space was the county. That is, the population of a county had to be assigned to shelters within the county, even though more effective shelters were not being used in an adjacent county.[1/] It was assumed also that there would be no travel in fallout.

1/ Although a county basis was used in the reported study, the program and computation procedure can be used for any geographical-political area for which data are available.

The constraint against population movement outside the county may be unrealistic and the number of persons sheltered, therefore, may be underestimated. On the other hand, if the counties are large and/or the time between warning and the arrival of fallout is short, the number of persons sheltered can be overestimated.

C. Selection of Level of Risk

The fallout environment that would occur in any given locality is not predictable with certainty, and conceptions of enemy-preferred target systems change as defensive and offensive capabilities change. For analysis purposes it is assumed that areas of the United States differ in probability of contamination by fallout and that they can be expected to retain these differences for significant periods of time. Information about fallout environments based on possible attacks, weapons characteristics as determined from intelligence reports, and probable wind conditions are available from many sources. Information about series of fallout environments has been compiled from an OCD source for use in the present demonstration. It is relatively easy to determine from this compilation the proportion of the possible attacks which result in a given level of radioactivity within a specific area.[2/] This radioactivity can be expressed in terms of the ERD of an unsheltered population within a given area. Thus, a probability curve for occurrence of given ERD's can be prepared; such a curve is shown in Figure 1, Cumulative Probability Distribution of Unshielded ERD in a Geographical Area.

In Figure 1, an unsheltered ERD equal to or less than 1000r has occurred in 0.5 of the hypothetical attack conditions, and an unsheltered ERD equal to or less than 3000r has occurred in 0.95 of the hypothetical situations. Conversely, in only 0.05 of the hypothetical situations would an unsheltered ERD be greater than 3000r.

In the present illustration, the 0.5 and 0.95 levels from RISK-type calculations were used as the fallout environment in each county. These levels are referred to as the 50 percent and 95 percent levels.

D. Determination of Effective Shelter Spaces

An effective shelter space is defined as one in which the ERD (as defined by RISK) for a person in this space is below a given maximum. The ERD experienced is determined by dividing the ERD for an unsheltered person, based on the probabilistic fallout environment discussed above, by the protection factor (PF) of the shelters to which population is assigned.

2/ Other sources of fallout probabilities could also be used.

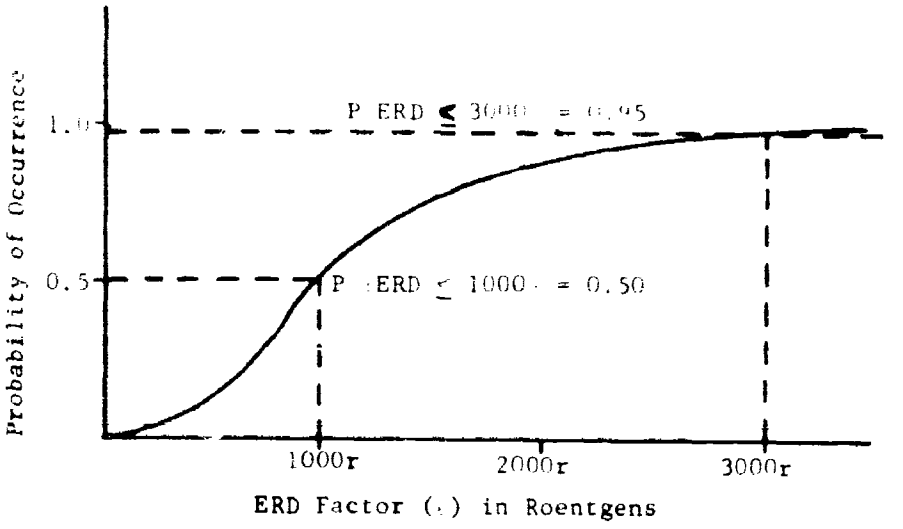

(The unshielded ERD values in the application of the model to Region 6 were computed as explained in Reference [1], in which an approximation of ERD from a total dose equation is employed.)

Fig. 1. Cumulative Probability Distribution of Unshielded ERD in a Geographical Area

This maximum allowable ERD can be set arbitrarily. However, there are at least two reasonable values, 100r and 200r, which might be chosen as criteria for determining the effectiveness of a shelter space. An ERD of 100r is given by the linear approximation of the dose response curve for casualties [References 2 & 3] as the threshold below which casualties will not occur. An ERD of 200r represents the threshold below which fatalities will not occur [References 2 & 3]. (See also Appendix B.)

Both the 100r and 200r levels were used in the allocation program described here.

E. Determination of Cost for Shelter Improvement

Phase 2 data of the National Fallout Shelter Survey were used as the basis of the costs for this application of risk-oriented allocations. Table I, Existing Fallout Shelter Spaces and Spaces Improvable by Shielding and Ventilation, is an illustration of the type of cost data provided for a typical county.

"Improvable by Shielding" are existing PF Category 2 and 3 spaces that can be upgraded to PF Category 4 or better by shielding. "Spaces Improvable by Ventilation" are those that can be added (by increasing the capacity of existing shelters) by ventilation. The average costs of either of these improvements range from $1.00 to $31.00 per space. These costs are representative for most of the counties in Region 6.

TABLE I

Existing Fallout Shelter Spaces and
Spaces Improvable by Shielding and Ventilation

Protection Factor		All Existing Spaces	Spaces Improvable by Shielding		Spaces Improvable by Ventilation	
Category	PF*	Number	Number	Total $	Number	Total $
8	1000+	6339	0	0	14167	46558
7	500-1000	16436	0	0	21693	21693
6	250- 499	98	0	0	22	682
5	150- 249	88	0	0	303	2424
4	100- 149	83	0	0	333	1998
3	70- 99	301	301	4214	0	0
2	40- 69	2013	849	20451	0	0
1	20- 39	0	0	0	0	0

* The minimum value of the PF range was used in the example application of the procedure.

There appears to be no statistically significant correlation between cost and level of protection of either new or improved shelter spaces. Most of the spending alternatives involved creating new shelter spaces by ventilating existing shelters, and ventilation costs are independent of the protection factor of the shelter.[3/] The effect of this will be shown in Section V.

F. Cost for New Shelter

In addition to the possibility of improving existing shelters, an alternative was included for providing shelter spaces under an incentive or other new construction program. These spaces would have a PF Category 4 protection factor or better ($PF \geq 100$). To facilitate computation in the absence of reliable data, it was assumed that the number of spaces available under this option amounted to a maximum of ten percent of each county's population. For computation and demonstration purposes, these spaces were arbitrarily estimated to cost $25.00 per space. Any costs may be used in the computation procedure.

G. Allocation of Funds

Using the CDC 3600 computer, the allocation of funds was programmed in such a manner that the least costly means available for making an ineffective space into

3/ It should be noted that Phase 2 data include some shelter spaces which can be added only by first shielding and then ventilating the shelter. These spaces are not included in the improvement alternatives in the input data used in this study.

an effective one was always used first. No funds were allocated where there would be no shelter that needed improvement, or where shelter improvements would still result in an ineffective shelter at the assumed fallout level. As shown in the mathematical description of the model (Appendix A), this procedure leads to an optimal allocation of funds--that is, the maximum number of effective spaces added for a given budget.

The allocation was constrained by a fixed budget in some cases and in other cases the funds were unrestricted.

It should be noted that the cost of stocking the shelters has been excluded in this application of allocation of funds. This would add $2.42 to the cost of each added shelter space [Reference 4], but would not affect the computation procedure or relative results.

H. Variations in Input Data

Variations in the risk level (95 and 50 percent), in the maximum allowable ERD (100r and 200r), and in budget constraints have already been noted. For sensitivity analysis purposes, 14 case studies or calculations were made using the CDC 3600 computer. Among the factors varied for analysis purposes are the following:

1. Residential Basements and Category 1 Shelter

In most of the 14 computations, residential basements and PF Category 1 shelters were included. The number of residential basements was estimated on the basis of selected SMSA's [Reference 5] and extrapolated over the entire state for most of the states in Region 6. Where SMSA residential basement data were not available for a given state, estimates were made based upon neighboring states. The residential basements were assumed to be available at no cost and to have a PF of 10.

In order to measure the effect of the residential basements and PF Category 1 shelter on the allocation model, residential basements and PF Category 1 were excluded in another case.

2. Possible Underestimations in PF in the NFSS Data

Protection factors from the National Fallout Shelter Survey data were increased arbitrarily in order to measure the effect of a possible conservative bias in the calculation of those data. Table II, Shelter Type, Protection Factor, and Revised Protection Factor shows these protection factor increases

---

4/ Possible underestimation in PF in the NFSS data was examined in Reference [6]. The revised PF in Table II employed the estimates of conservative bias reported in that reference.

TABLE II

Shelter Type, Protection Factor, and Revised Protection Factor

	Protection Factor*	Revised PF
Homes	2	3
Residential Basements	10	15
PF Category 1	20	30
PF Category 2	40	60
PF Category 3	70	125
PF Category 4	100	185
PF Category 5	150	250
PF Category 6	250	350
PF Category 7	500	600
PF Category 8	1000	1200

* Lower limit of the PF Category for NFSS shelter categories.

3. Overcrowding of Shelters

To determine the effect of possible overcrowding of shelters, a case study was designed whereby the capacities of both existing and potential shelters were increased by 25 percent.

4. Variations in Cost of Ventilation

In one case study, the impact of low cost ventilation devices was examined by assigning a uniform cost of $3.00 to each space that could be made effective by ventilation.

IV. RESULTS

The program produced for each county and each combination of input data (RISK-level, maximum allowable ERD, residential basements included or excluded, etc.) the following data: (1) the total effective spaces added, (2) the average cost per space added, and (3) the total cost of both new and improved shelters. Table III, Illustrative Risk-Oriented Shelter Budget Allocation, is an example of the output data. (This output format is explained in detail in Appendix D, Section A-4.) In this example, the funds available were limited to a $20 million budget.

Table IV, Regional Summary of Case Studies Using the Risk-Oriented Allocation Program, summarizes all fourteen cases in which the allocation model was utilized (see also Appendix C). It should be noted that even in the cases where the budget was not limited, some of the population would still be ineffectively sheltered. This is because an insufficient number of new or improvable spaces was identified.

TABLE III

Illustrative Risk-Oriented Shelter Budget Allocation
(Distribution of $20,000,000 Among Counties in Region 6)

State Code	County Code	Residential Population	% Ineffectively-Sheltered Population*	Total Potential Spaces	Total Spaces Added	Avg. Cost/ Space Added	% Ineffective After Expenditure*	Total Improvement Cost
1	1	143745	89.8	7026	7026	$ 9.51	85.0	$ 66817
1	2	120296	94.1	5867	5867	5.75	89.2	33734
1	3	113426	95.7	23164	16014	20.63	81.6	330420
1	4	74254	83.9	21808	14344	7.34	64.6	105323
1	5	493891	70.9	183058	183058	5.19	33.9	950837
.	.	.	.	.	.	.	.	.
.	.	.	.	.	.	.	.	.
.	.	.	.	.	.	.	.	.
State Totals		1753954	75.9	427758	371904	6.73	54.7	2504008
2	1	136899	32.0	43815	29666	7.07	10.3	209675
2	2	119067	58.0	69111	51908	8.05	14.4	417783
2	3	266315	63.8	104846	104846	7.75	24.4	812504
2	4	80048	0.0	0	0	0.00	0.0	0
2	5	83102	93.7	9437	9437	8.62	82.3	81359
.	.	.	.	.	.	.	.	.
.	.	.	.	.	.	.	.	.
.	.	.	.	.	.	.	.	.
State Totals		2757897	61.7	658041	534798	7.33	42.3	3918299
Regional Totals		14064841	70.7	3016000	2624000	$ 7.62	51.8	$20,000,000

Cost of Next Space Added = $25.00

* A shelter is ineffective if the resulting ERD is greater than 200 roentgens.

TABLE IV

Regional Summary of Case Studies Using the Risk-Oriented Allocation Program

(1)	(2)	(3)	(4)	(5)				
	Control Parameters							
Case	Risk Level %	Max ERD (Centuries)	Protection Factors NFSS or Revised**	Cost (Millions of Dollars)	Standard Input (Deviations Noted)	Spaces Added (Millions)	Average Cost/ Space	Population Ineffectively Sheltered After Improvements
1	95	100	NFSS	$ 30.2		3.016	$ 10.01	6.881
2	50	100	NFSS	14.5		1.200	12.18	1.713
3	95	200	NFSS	34.5		3.221	10.7[illegible]	[illegible]
4	50	200	NFSS	10.3		1.005	10.24	1.101
5	95	100	Revised	35.8		3.307	10.83	5.178
6	95	200	Revised	28.7		2.367	12.13	4.179
7	95	100	NFSS	10.0*		1.959	5.10	7.946
8	95	100	NFSS	20.0*		2.624	7.62	7.281
9	50	100	NFSS	10.0*		1.041	9.69	1.872
10	95	100	NFSS	32.2	Res. Basements Excluded	3.307	9.74	7.454
11	50	100	NFSS	16.3	Res. Basements Excluded	1.584	10.29	2.529
12	95	100	NFSS	34.3	Res. Basements & PF Category 1 Excluded	3.064	11.19	7.697
13	95	100	NFSS	26.9	Overcrowding Shelters by 25%	3.189	[illegible]	[illegible]
14	95	100	NFSS	10.1	Ventilation Costs Reduced to $3.00	3.016	3.35	6.881

* A limited budget was assumed in only these three cases. An unlimited budget was assumed in all other cases, thus allowing all spending alternatives to be exhausted.

** See Table II.

Figure 2, Cost/Effectiveness Curves for Expenditures for Fallout Protection in Region 6 at the 50 and 95 Percent Levels of Risk, illustrates the increasing rate of expenditure as the allocation proceeds from the least to the more costly improvement alternatives. Limits are established by the maximum number of spaces available for improvement as determined in the Phase 2 data.

Computations were also made of the cost of shelter for all of the population in Region 6 under the 50 and 95 percent levels of risk. Since the numbers of alternatives for improved and new shelters included in the allocation model were much smaller than the numbers of the population with ineffective shelter, it was necessary to estimate costs of additional means for providing shelter space. An arbitrary cost of $50.00 was assumed for each additional effective space added. Figure 3, Budget Level vs. Population Ineffectively Sheltered at Two Levels of Risk, illustrates the increase in budget with decreasing numbers of population ineffectively sheltered when this assumption is used.

V. ANALYSIS OF RESULTS

A. Relationship of Costs and Level of Risk

It is seen in Figures 2 and 3 that under the 95 percent risk level with its higher average levels of radiation, more spaces will be ineffective than under the 50 percent risk level. Consequently, more spaces are eligible for improvement funds in the allocation model, and the total cost will be greater. However, even after all available improvable spaces are used, the number of persons ineffectively sheltered under the 95 percent risk level is still much greater than under the 50 percent risk level. Thus it is apparent that budget requirements are extremely dependent upon the level of risk that is assumed.

The influence of the level of risk that is assumed on costs can be clearly seen in Figure 3, in which the estimated budgets for providing for all of the population in Region 6 are shown. Under the 95 percent level of risk, a budget of approximately $375 million would be necessary; under the 50 percent level of risk, the budget would be less than $100 million.

It is important to note that when the budget is unrestricted there is no great difference in average cost per space added regardless of which risk level is assumed. This is due to the fact, as pointed out earlier, that there is no correlation between the cost and the PF of an improvable shelter space. Thus, while fewer spaces need to be improved under the 50 percent risk level, their range of cost approximates that for the greater number of spaces needing improvement under the 95 percent risk level.

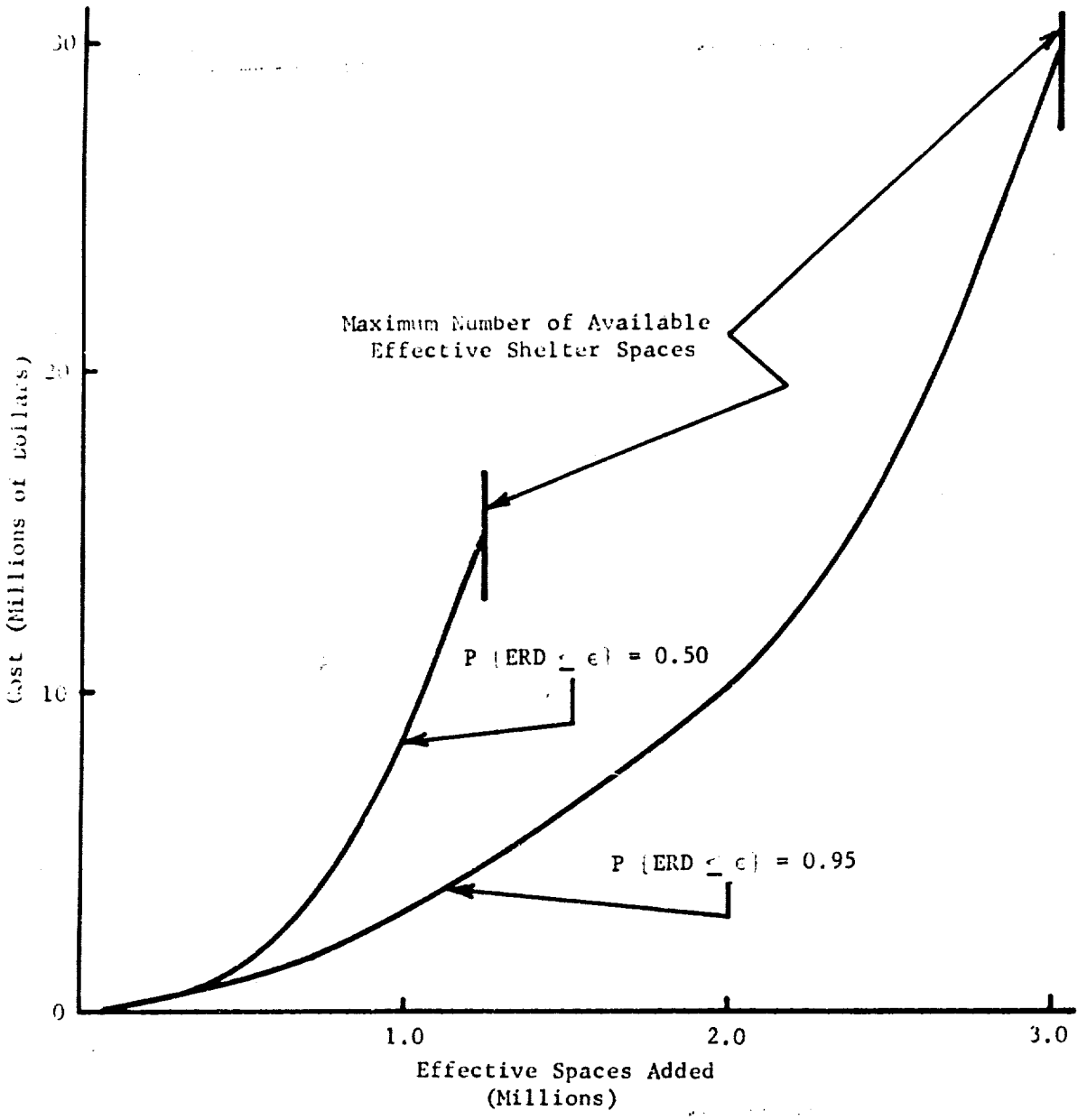

Fig. 2. Cost/Effectiveness Curves for Expenditures for Fallout Protection in Region 6 at the 50 Percent and 95 Percent Levels of Risk (Allowable ERD_{Max} = 100r)

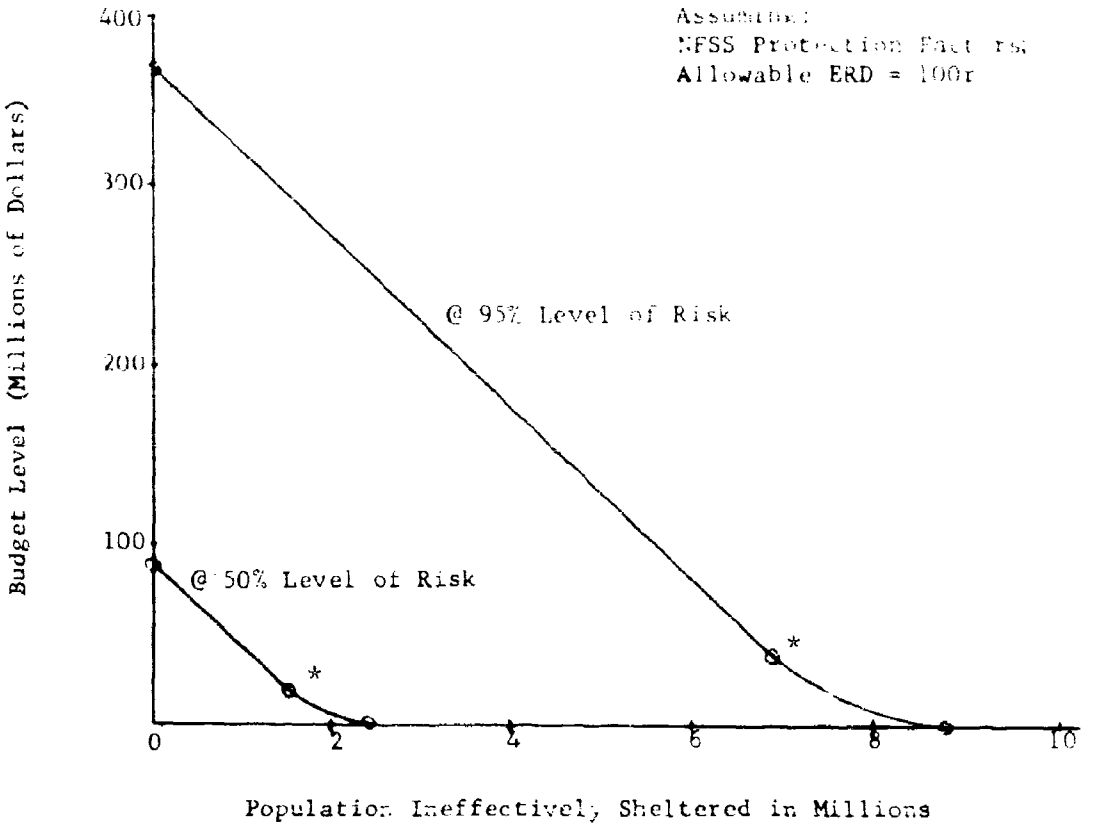

* Points at which a fixed $50 per space was used for each further reduction of population ineffectively sheltered.

Fig. 3. Budget Level vs. Population Ineffectively Sheltered at Two Levels of Risk

When the budget is limited so that all spaces cannot be improved, the average cost per space is higher for the 50 percent risk level than for the 95 percent risk level. For example, the average cost is $9.69 for the 50 percent risk level (Case 9) and $5.10 for the 95 percent risk level (Case 7); see Table IV. At the 95 percent risk level, the budget is exhausted on the more numerous low cost opportunities before allocation can be made to higher cost improvements.

B. Limitations of Phase 2 Data

In Case 4 of Table IV, the most optimistic case from the perspective of population effectively sheltered, there were still more than one million persons in Region 6 who could not be assigned to effective shelters. This, however, does not mean that there are not unidentified spaces in Region 6 that could be made effective. For a variety of reasons, many buildings or areas were excluded from the NFSS.

The rough estimate figure of $50.00 each for additional spaces is used to illustrate differences of ultimate costs (costs of 100% effective sheltering) under the two risk levels. The identification of more potential spaces and their associated costs would be necessary to make a more complete risk-oriented analysis of Region 6 budget requirements.

C. Effect of Inclusion of Residential Basements in Shelter Data

Figure 4, The Percentage Reduction in Population Ineffectively Sheltered Through the Use of Residential Basements at the 50 Percent and 95 Percent Levels of Risk, shows that with a 50 percent risk level, inclusion of residential basement spaces decreases the unsheltered population by about five percent in one state and by nearly seventy percent in another. At the 95 percent risk level, lesser changes are affected by including residential basements in calculations of shelter effectiveness. This indicates that residential basements can be extremely important in survival planning in some states, particularly when lower risk and fallout levels are considered.[5/]

D. Effect of Revised Protection Factors

The effect of using protection factors less conservative than those of the NFSS on numbers of people considered ineffectively sheltered is shown in Table V. Even before expenditures, approximately 1.5 million more persons in Region 6 would be considered effectively sheltered under the 95 percent level of risk if the less conservative factors were used.

TABLE V

Effect of Possible Bias in Existing Structure PF Estimates at Two Maximum Allowable ERD Levels

	Population Ineffectively Sheltered (millions)			
	Max. Allowable ERD = 100r		Max. Allowable ERD = 200r	
	NFSS Data (Case 1)	Revised PF* (Case 5)	NFSS Data (Case 3)	Revised PF* (Case 6)
Before Expenditure	9.897	8.485	8.090	6.546
After Expenditure	6.881	5.178	4.869	4.179

* See Table II.

5/ In Figure 4 the apparent contradiction in the bar graph for state 2 resulted from the fact that in most counties of that state, homes with a protection factor of 2 were effective.

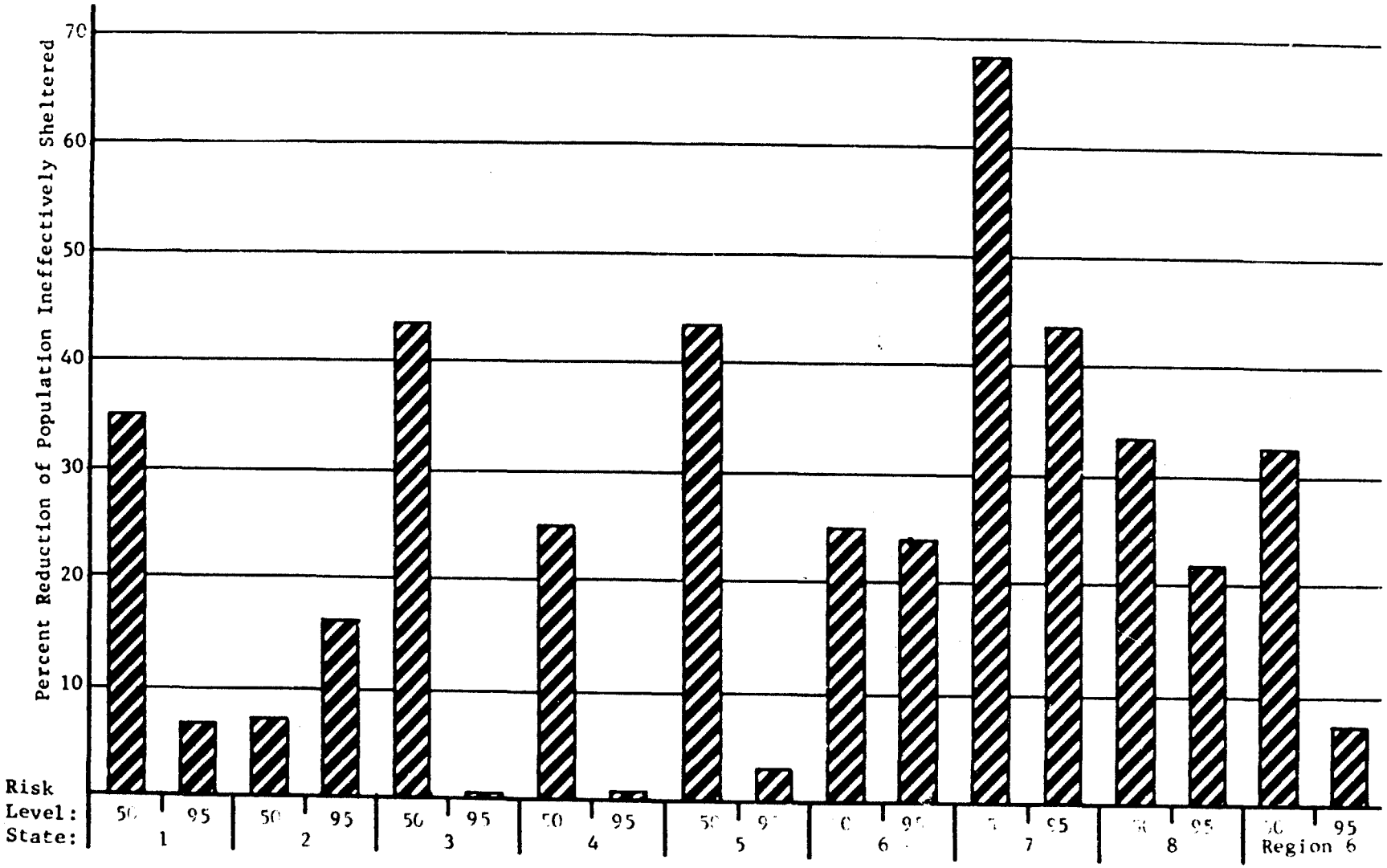

Fig. 4. The Percentage Reduction in Population Ineffectively Sheltered Through the Use of Residential Basements at the 50 Percent and 95 Percent Levels of Risk

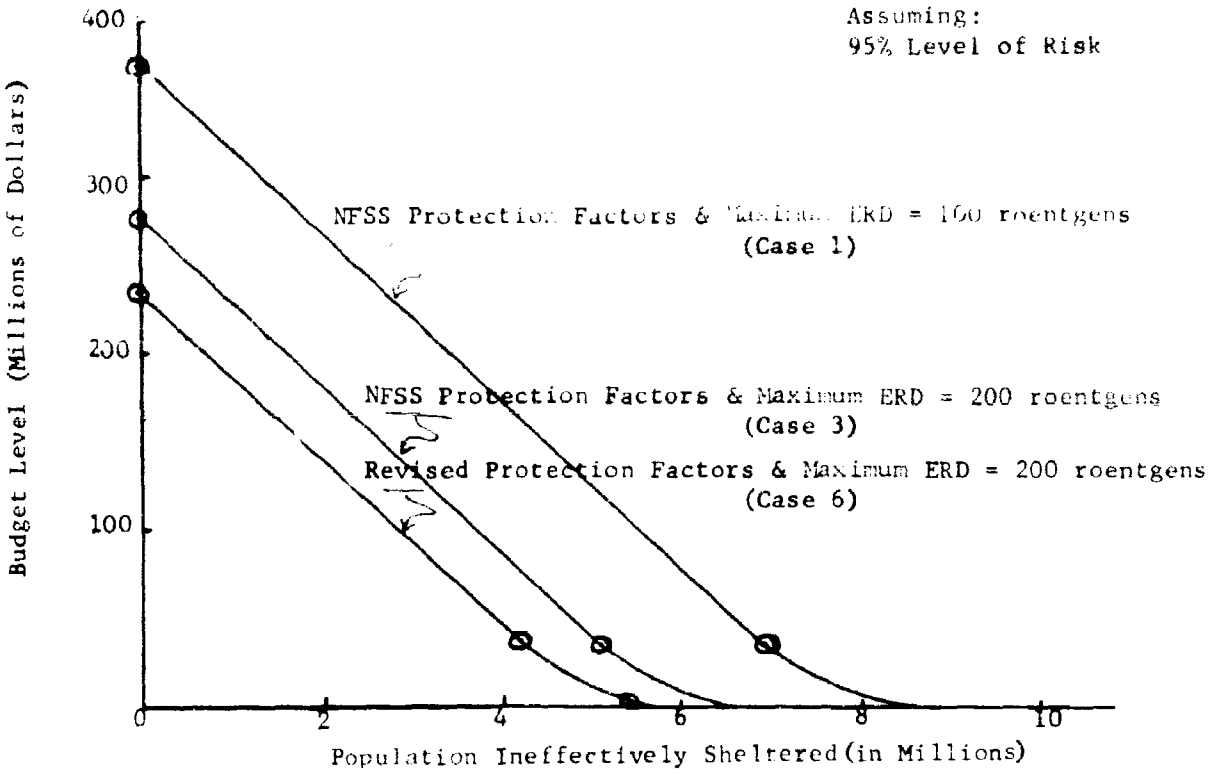

Fig. 5. Budget Level vs. Population Ineffectively Sheltered Under Stated Levels of Allowable Maximum ERD and Protection Factors

The effect on cost can be seen most clearly when the budget for providing for all of the population in Region 6 is considered. Under the 95 percent level of risk, and with a maximum allowable ERD of 200r, the budget based on NFSS protection factors would be approximately $280 million; based on revised protection factors, it would be approximately $240 million. This is shown in Figure 5, and is based on the same assumed cost used earlier of $50 per effective shelter space added beyond those that were included in the allocation model.

E. Effect of Reduced Cost for Ventilation

In Case 14 the cost per space added by ventilation was estimated, for calculation purposes at $3.00. For Region 6 the average cost per shelter space added then dropped from $10.01 for the comparable case (Case 1) to $3.35. From this it can be concluded that it would be extremely profitable to find less costly means of providing ventilation in potential shelters with a high PF. If Region 6 is typical of the entire country, it seems that no other single step would be more important in increasing the effectiveness of the present national shelter system.

F. Effect of Overcrowding of Shelters

A comparison of the results of Cases 1 and 13 indicates the effects of overcrowding shelters by 25 percent. These effects are shown in Table VI.

TABLE VI

Comparison of Effect of 25 Percent Overcrowding
(95 percent risk level, Max ERD = 100 roentgens)

	Normal (Case 1)	Overcrowding (Case 13)
Population Ineffectively Sheltered:		
Before Improvement (millions)	9.897	9.184
After Improvement (millions)	6.881	5.995
Spaces Added (millions)	3.016	3.189
Total Cost ($ millions)	$ 30.2	$ 26.9
Average Cost per Space ($)	$ 10.01	$ 8.44

It should be noted that the effect of overcrowding shelters by 25 percent does not increase the number of persons effectively sheltered by 25 percent. This is due to the fact that in some counties there are fewer than that proportion of the population who do not have effective shelter for the fallout environment comparable to the 95 percent risk level. In fact, in some counties, under normal shelter allocation, there are no persons who are ineffectively sheltered, and crowding the higher PF shelters adds no effective spaces.

VI. CONCLUSIONS AND RECOMMENDATIONS

A. Introduction

The preceding sections of this volume have described a rational, well-defined methodology for engaging in risk-oriented programming. Further, by applying the methodology to Region 6, the practicability of carrying out large scale analyses has been demonstrated. From the results obtained, it is believed that if risk-oriented programming were undertaken, the budget allocation model could be used in its present state to provide guidance in allocating funds and for evaluating the cost/effectiveness of various policies and proposed CD shelter programs. Examples of current interest are:

1. The evaluation of government incentive programs for the inclusion of fallout shelters in new construction.

2. The evaluation of new ventilation equipment.

3. The evaluation of policies regarding the inclusion of various categories of shelters (e.g., residential basements and PF Category 1 shelters) as components in the CD shelter system.

It should be emphasized that the recommended applications of the budget allocation model in its present state are directed toward providing guidance to the policy-makers at the national or perhaps regional level. Also, the applications are limited to the "fallout only" case.

In order to make more detailed and comprehensive analyses at the operating (local) level, further refinements to the model must be made. Also, additional data requirements have been identified which, if met, could enhance the utility of the model. These model refinements, and additional data requirements as well as some special problem areas are discussed at length below.

B. The Introduction of Prompt Effects into the Model

1. General

The allocation model described above has been used exclusively for fallout shelter development, and prompt effects have been temporarily ignored. Funds were allocated for the improvement of the fallout shelter posture in some areas with a high probability of suffering serious direct effects. As a result, the fallout shelter spaces near the blast area would tend to be ineffective.

Conceptually, the inclusion of prompt effects in the model can be handled in much the same manner as fallout. The extension of the model to blast effects is described briefly below to illustrate the concept. Other prompt effects could be incorporated similarly, if warranted.

The measure of effectiveness to this point has been population effectively sheltered. Adapting this same measure of effectiveness to the analysis of a total shelter system (including blast effects) requires only that a new risk parameter defining the attack environment, principally the blast overpressure, and a new shelter parameter, vulnerability index, be introduced. In practice however, other difficulties arise, particularly in data requirements as discussed below.

2. Shelter Classification for Resistance to Radiation and Blast

For the following discussion, it will be useful to define the protection afforded by a shelter with a blast and fallout classification system as shown

TABLE VII

Categorization of Shelters by Vulnerability Index (VI) and Protection Factor (PF)

PF \ VI	1 (2 psi)	2 (3 psi)	3 (5 psi)	4 (7 psi)	5 (10 psi)	6 (15 psi)	7 (20 psi)	8 (25 psi)	9 (30 psi)	10 (50 psi)
Homes (2)										
Residential Basements (10)										
1 (20)										
2 (40)										
3 (70)										
4 (100)										
5 (150)										
6 (250)										
7 (500)										
8 (1000)										

4. Modification of Existing Model

As an example, assume that at a given level of risk the ERD factor is 10,000r and the blast overpressure is 5 psi. This represents the attack environment against which the population in the area must be protected. If the allowable Maximum ERD is 100r, PF Category 4 or better shelters will be classified as effective spaces with respect to fallout. Also, a vulnerability index of 3 or better may be classified as effective spaces with respect to blast. Thus, to be considered effective, a shelter space must meet both requirements. Note that this procedure allows for the inclusions of blast shelters as potential improvement alternatives (given appropriate cost and protection data).

The fact that there are two criteria for evaluating a shelter space raises the problem of how to allocate population to shelters within any given area. In the "fallout only" cases where only one criterion (PF) was used, the problem was easily resolved by assigning population to shelter giving the highest PF first priority in assignments. However, when two classifications are used (PF & Vulnerability Index), the above procedure does not hold and a new procedure must be developed.

The only other change from the existing allocation model is the manner in which the shelter spaces are determined to be effective or ineffective. Except for the need to reexamine the location of people relative to shelter in a prompt effects situation, other procedures remain the same, including the measure of effectiveness (population effectively sheltered) of the shelter system. Therefore, the procedure described in Sectior II for allocating shelter development funds remains unchanged, and the optimality of the procedure is still valid.

5. Prompt Effects Data Requirement

Although the concept has remained unchanged from the "fallout only" model, several new data requirements have been imposed. Perhaps, the major change relates to the accumulation unit, or geographical area, whose dimensions equal the allowable uncertainty in shelter location (or equivalently, the area within which the attack environment is homogeneous) and over which funds are to be allocated. In the case of fallout, it is convenient and plausible to consider the county as the accumulation unit because the level of downwind fallout could be considered constant over the entire county. However, when considering blast overpressure as one of the risk parameters, a much smaller geographic unit must be chosen for those areas which are potential targets.

Another data requirement is the classification of shelter spaces with respect to the vulnerability indices. These data are available from the NFSS Phase 2 data, but not in a form which is readily adaptable to the purpose required by the model described above.

C. Application of the Methodology to Shelter System Programming

The data used in the demonstration of risk-oriented programming described above were the best readily available. Most of these data, however, were compiled during or before 1962. Therefore, no attempt was made in the discussion of results to draw conclusions applicable to detailed planning at the local level.

Further, the model as developed is static, or time independent. However, time is a factor which must be considered. For example, suppose that a five-year plan for fallout shelter development was being devised and that the existing data were used in developing spending strategies. At the end of the five-year period, the population data would have changed, the risk may have changed, new spending alternatives may have been discovered, etc. Thus, the strategies developed would have been less than optimal.

Although there are no provisions in the model for including the time factor, the analyst may include it in the preparation of the data. The first step is to select a time-planning horizon, e.g., 1970. Then the input data (population, shelter, and threat estimate) would be forecast to that point in time.

One major problem which has been emphasized by the studies described above is the shortage of spending alternatives for improving the shelter status of the population. For example, even at the 50 percent level of risk, approximately 150 of the 619 counties in Region 6 had a significant percentage of the population ineffectively sheltered after completely exhausting the spending alternatives. At the 95 percent level of risk, approximately 500 of the 619 counties had a significant percentage of the population ineffectively sheltered. Of these counties, 275 had over 75 percent of the population ineffectively sheltered. These results indicate that a major effort should be exerted to identify new methods of creating acceptable low cost shelter spaces at the local level. This is obviously a major undertaking, but one which is essential if fallout shelters are to be made available to the total population in an efficient and well-planned manner.

It follows further that shelter expenditures are most likely to be effective in areas where population is ineffectively sheltered at low levels of risk.

Another factor requiring more careful analysis, before attempting risk-oriented programming, pertains to population location. The residential population, as taken from the NFSS Phase 2 data, was used in the demonstration described above. However, in certain areas where the day and night population data differ significantly from the residential population or from one another, further study is required to determine which set of or combination of population data should be used.

D. Critical Decisions in Risk-Oriented Programming

The model and allocation procedure described still leaves scope for the decision-maker. A decision-maker must resort to judgment in many matters. Among the decisions on which judgment must be exercised in utilizing the results of the current model directly are:

1. The planning horizon to be used and the resulting posture over time--five $1 billion annual budgets spent sequentially as contrasted with a single $5 billion budget planned and spent over a period of five years.

2. The impact of future changes in expected attack environments (for better or for worse)--attack environments determine the shelter posture purchased. (How sorry might we be in 1975 to have planned with 1965 estimates of the probable attack environment?)

3. How best to hedge our decisions when the optimum improvement programs in an area are very different for day and night population.

These are but examples; it is felt that the impact of wrong decisions (due primarily to the inherent uncertainty of forecasting the future) can probably be clarified best by numerous systematic case studies on a small scale (so that the mind can clearly grasp the relations among the parameters). These seem to be the best vehicles for giving maximum insight to guide decisions of this nature.

It should be noted that the acceptability per se of risk-oriented programming is not subject to analysis in the context of this study. However, through case studies in which the attack environment is varied in a manner to reflect confidence (or lack thereof) in attack environment estimates, insight can be gained into the possible errors in allocation of shelter improvements, due to fallible estimates of the attack environment.

To illuminate further the plausibility (or implausibility) of risk-oriented programming, comparisons in terms of cost, effectiveness, and "robustness" of allocation, rules should be made between risk-oriented programming and simpler decision rules for shelter improvement programming, such as:

1. In all SMSA's, plan towards equal fallout and blast shelter coverage; time phasing may also be varied (improve poorest coverage areas first, spend first in the largest SMSA's, etc.)

2. Improve all areas' fallout shelter systems not already at x percent (say 110%) of population coverage to x percent, and then incorporate blast shelter protection according to simple rules (largest SMSA's first, for example).

3. Incorporate blast shelter only in the largest 100 (or 50, or 200) cities without adding fallout protection in these areas. Later, earlier, or simultaneously, add fallout shelter in the remaining SMSA's having a shelter deficit.

These are but examples of simple decision rules which are easier to explain and apply, but which have a lesser cost/effectiveness, for most objective functions at least. The discrepancy in effectiveness between the risk-oriented allocation and the simpler allocations is to be weighed against our confidence in the estimates of the probable attack environments. Only by comparing the effectiveness of these alternative decision rules over a range of attack environments suitably chosen to reflect confidence in them, can we gain insight into the desirability of the more complex risk-oriented decision rules.

REFERENCES FOR VOLUME I

[1] Linnea G. Laure and Irving E. Gaskill. Risk II: NDAC Vulnerability Analysis Program Model II. EMCD Technical Manual No. 97. National Damage Assessment Center, August 1960.

[2] Joseph D. Coker. Nuclear Attack Hazard and Resource Evaluation Models. Washington: National Resource Evaluation Center, 18 October 1961.

[3] D. E. Barnes and Denis Taylor. Radiation Hazards and Protection. George Newness Limited: London, 1958. pp. 23-27.

[4] U. S. House of Representatives. Hearings Before Subcommittee No. 3, Committee on Armed Services. Eighty-Eighth Congress, First Session, Washington: U. S. Government Printing Office, May 28, 29 and June 3, 1963. Page 3099.

[5] Philip McMullan and Philip McGill, et al. Improvement of Protection Data Base for Damage Assessment and Data Base on Shelter Needs. Final Report, R-OU-82/83, Volume II, Appendix A, OCD Subtasks 4521A and 4613A, Durham, North Carolina: Research Triangle Institute, Operations Research Division, 13 January 1964.

[6] E. L. Hill. Analysis of Survey Data. Final Report, Part II, R-OU-81, Subtask 1115A, Durham, North Carolina: Research Triangle Institute, Operations Research Division, 15 February 1964.

Appendix A

The Algorithm for Allocating CD Fallout Shelter Funds

I. ASSESSMENT OF SHELTER ADEQUACY

A. Input Data

The input data can be described as a group of matrices, and row and column vectors. The algorithm for allocating funds involves simple operations upon the elements of these matrices and vectors.

The existing shelter spaces are classified according to the degree of protection they afford against fallout. Further, they are accumulated by area (e.g., county, SMSA, or standard locations). Therefore, the existing shelter spaces (S) can be represented by a matrix and denoted by

$$S = \left\| s_{ij} \right\| , \quad \begin{matrix} i = 1, 2, \ldots, m \\ j = 1, 2, \ldots, n \end{matrix} \qquad \text{(A-1)}$$

where s_{ij} = the number of identified shelter spaces of the jth protection category in the ith area.

Two other matrices are used to represent the addition of shelter spaces that can be created by additional expenditures and the corresponding cost per space for these additions. These matrices are denoted by

$$A = \left\| a_{ik} \right\| , \quad i = 1, 2, \ldots, m \qquad \text{(A-2)}$$

$$C = \left\| c_{ik} \right\| , \quad k = 1, 2, \ldots, r$$

where a_{ik} = the number additional spaces of category k in area i that can be created at a cost of c_{ik} per space. Note that the protection categories in S are not necessarily the same as in A.

The additional input is denoted as follows: Let

P_i = total population in area i.

P_{ij} = population in area i assigned to shelters of category j in area i.

E_i = the fallout environment for the ith area stated in terms of unshielded equivalent residual dose.

M = maximum allowable equivalent residual dose.

f_j = protection factor of protection category j for the existing shelter spaces for the matrix S.

f_k = protection factor of protection category k for the potential spaces in matrix A.

B = total funds available for fallout shelter development.

B. Existing Shelter Allocation

Using cost-effectiveness as the decision criterion for allocating CD funds requires, first, that the existing shelter status of the population be known. This requires an assignment of population to existing shelters. To accomplish this, assume that the protection categories are ordered such that

$$f_1 \leq f_2 \leq \ldots \leq f_j \leq f_{j+1} \leq \ldots \leq f_n . \qquad \text{(A-3)}$$

Then the assignment of population to existing shelters is made in the following order. (The technique described below is equivalent to assigning population to shelters by protection category, assigning highest priority to shelter spaces with the highest protection factors.)

$$P_{ij} = \begin{cases} P_i - \sum_{j=q+1}^{n} s_{ij}, & \text{for } q < n \\ P_i, & \text{for } q \geq n \end{cases}$$

$$\begin{aligned} p_{in} &= s_{in} \\ p_{i,n-1} &= s_{i,n-1} \\ &\ldots\ldots \qquad \text{for } i = 1, 2, \ldots, m \\ p_{ij} &= s_{ij} \end{aligned} \qquad \text{(A-4)}$$

where the subscript q denotes the lowest order shelter space required to shelter (though perhaps inadequately) the total population for the ith area. Therefore, a population-to-shelter assignment matrix (P) has been formed. This matrix will be an m x n matrix with the elements $p_{ij} = 0$ for all $j < q$.

Since residential dwellings represent the lowest grade of shelter, the number of spaces in this category can be assumed to be equal to the population (i.e., $s_{i,1} = P_i$). Therefore, when the population exceeds the number of shelter spaces (excluding homes), q = 1; and for area i ,

$$P_{s,1} = p_i - \sum_{j=2}^{n} s_{ij} \quad . \tag{A-5}$$

From Equation A-4, it should be noted that assignments of population in the ith area are made only to shelter spaces in the ith area. This implies the assumption that population is allowed complete freedom of movement within their own area, but no movement outside the area. A model allowing movement both within and among areas was developed and is described in Volume II, A Sensitivity Analysis of Selected Parameters Based on 8 SMSA's.

C. Shelter Adequacy

Given a distribution of population to shelter, the adequacy of the existing shelter status can be determined quantitatively. This is accomplished by subjecting the sheltered population to a fallout environment, E_i. The shielded equivalent residual dose (e_{ij}) for population in each protection category (j) and each area (i) is given by

$$e_{ij} = E_k/f_j \qquad \text{for } i = 1, 2, \ldots, m \quad j = q, q+1, \ldots, n \; . \tag{A-6}$$

For the shelter spaces to be considered adequate, the shelter spaces must meet the requirement that (e_{ij}) be less than some maximum allowable ERD (M), so that

$$M - e_{ij} \geq 0 \; . \tag{A-7}$$

When this condition is not met, the population is considered to be unsheltered, or to be in inadequate shelter spaces.

D. Shelter Posture Improvement

Since the primary interest from this point forward is to improve the shelter status of the population, only the population inadequately sheltered need be considered. Therefore, we introduce a Kronecker delta such that the number of persons

unsheltered in the ith area is given by the expression

$$\sum_{j=1}^{m} \delta_{ij} p_{ij} \qquad \text{where } \delta_{ij} = \begin{cases} 1, \text{ for } M - c_{ij} < 0 \\ 0, \text{ for } M - c_{ij} \geq 0 . \end{cases} \tag{A-8}$$

For the ith area, let $(j = u)$ be the minimum protection category which meets the condition in Equation A-7. Then, the number of persons in the ith area considered to be inadequately sheltered is given by $\sum_{j=1}^{u-1} p_{ij}$. (Note that where $q = u$, the total population in area i is adequately sheltered.)

This completes the risk-oriented assessment of the existing shelter status of the population and defines the shelter needs of each area. Thus the ground work has been laid for determining how and where shelter development funds should be spent.

II. ALLOCATION OF FUNDS

A. Allocation Objective

The a_{ik} matrix (alternatives for improving the shelter status of the population) and the associated c_{ik} matrix (costs of these alternatives) can now be used in allocating a total budget among individual areas. The objective is to allocate funds such that the cost/effectiveness will be maximized. In this instance, the effectiveness is measured in shelter spaces added per dollar. This will be discussed further in Section D.

B. Improvement Alternatives Evaluation

Before considering the alternatives for improving the shelter status of the population, a risk-oriented procedure similar to Equations A-6 and A-7 must be performed on each of the protection categories in each area to determine their adequacy. In this case, the shielded equivalent residual dose that a person would receive in each of the protection categories and all areas is given by

$$e_{ik} = E_i / f_k \quad \text{for } i = 1, 2, \ldots, m \quad k = 1, 2, \ldots, r . \tag{A-9}$$

For these potential shelter spaces to be considered eligible for shelter development funds, they must meet the following requirement:

$$M - e_{ik} \geq 0 \ . \qquad \text{(A-10)}$$

By introducing another Kronecker delta, the total number of shelter spaces in area i that can be made available by shelter development funds is given by

$$\sum_{k=1}^{r} \delta_{ik} \ a_{ik} \quad \text{where } \delta_{ik} = \begin{cases} 1, \ m - e_{ik} \geq 0 \\ 0, \ M - e_{ik} < 0 \ . \end{cases} \qquad \text{(A-11)}$$

C. Allocation Constraints

Before proceeding to the next step of allocating the total budget (B) among the n areas, two factors must be considered. First, if the total budget is greater than the total cost of the improvement alternatives, or

$$\sum_{i=1}^{m} \sum_{k=1}^{r} \delta_{ik} c_{ij} a_{ik} \leq B \ , \qquad \text{(A-12)}$$

then the constraint is not the financial resources, but is the number of identified potential new shelter spaces. Further, if the number of persons inadequately sheltered in existing spaces is greater than the total number of identified potential new spaces; i.e.,

$$\sum_{i} \sum_{j} \delta_{ij} \ p_{ij} > \sum_{i=1}^{m} \sum_{k=1}^{r} \delta_{ik} \ a_{ik} \ , \qquad \text{(A-13)}$$

the input data is not sufficient and a shelter gap remains after the allocation is made. Therefore, if the condition of Equation A-12 or both Equations A-12 and A-13 exist, the amount of funds expended in each area is given by

$$B_i = \sum_{k=1}^{r} \delta_{ik} \ c_{ik} \ a_{ik} \quad \text{for all} \quad i \ . \qquad \text{(A-14)}$$

For the fund allocation, it will be assumed that the available funds will be limited. Then the direction of the inequality in Equation A-13 is of no consequence.

D. Fund Allocation

The allocation of available funds is to be performed in a manner which will maximize the number of adequate spaces added. Since a "go/no-go" principle has been adopted for evaluating shelter spaces, all potential spaces meeting the

requirement given by Equation A-10 are effective shelter spaces. For purposes of allocating funds, the identity of the protection category may be ignored since a space is either adequate or inadequate. Therefore the subscript k of ℓ_{ik}, c_{ik}, and a_{ik} can be dropped. However, associated with each a_{ik} improvable shelters is a unique cost c_{ik}. By replacing subscript k with a subscript ℓ and ordering the ℓ we get:

$$c_{i1} \leq c_{i2} \leq \cdots \leq c_{i\ell} \leq \cdots \quad . \tag{A-15}$$

The corresponding a_i and c_{ik} are ordered in like manner. Thus, a table of potential spaces has been developed in which spaces are listed in order of ascending costs. Note that the area identity (subscript i) has been maintained.

A single allocation of funds thus becomes $\delta_{i\ell}\ c_{i\ell}\ a_{i\ell}$. If $\delta = 0$, no allocation results. This meets the requirement that no funds will be allocated to improving or creating an adequate shelter space (as defined by E_i, the fallout environment for county i). Hence, the value $c_{i\ell}$ becomes the cost per adequate space added (the measure of cost/effectiveness for adding the $a_{i\ell}$ shelter spaces in the ith area).

With $c_{i\ell}$ as the measure of cost/effectiveness, the optimal spending strategy is to allocate funds to the lowest cost alternative first. The first allocation would be $b_i = \delta_{i1}\ c_{i1}\ a_{i1}$ where b_i is the amount of money allocated to the ith area for the shelter spaces denoted by a_{i1}.

The allocation of funds must satisfy at least one of the three following conditions:

$$\begin{cases} \sum_j \delta_{ij}\ p_{ij} = 0 & \text{(A-16)} \\ \qquad\qquad i = 1, \ , \ \ldots, \ n & \\ \sum_\ell \delta_{i\ell}\ a_{i\ell} = 0, & \text{(A-17)} \end{cases}$$

or

$$\sum_i \sum_\ell \delta_{i\ell}\ c_{i\ell}\ a_{i\ell} = B \ . \tag{A-18}$$

This means that either all of the population must be effectively sheltered (Equation A-16), all of the available improvement alternatives must be used (Equation A-17), or the total budget must be allocated.

The Equation A-16 also implies that before an allocation is made to the ith area, the inequality $\sum_{j=1}^{m} \delta_{ij}\ p_{ij} > 0$ must hold. If the inequality did not hold,

further addition of shelter spaces would be ineffective and the funds would be wasted.

The allocations of funds to the ith area (subject to the constraint $\sum_{j=1}^{m} \delta_{ij} p_{ij} > 0$ is given by

$$b_i = \delta_{i\ell} c_{i\ell} a_{i\ell} \qquad \text{(A-19)}$$

where the subscript ℓ denotes the order in which the allocations are made. The value b_i, however, does not necessarily represent the total funds allocated to that area. The original notation for the available improvement alternatives before ordering them by ascending cost was a a_{ik}, k = 1, 2, ..., r. Therefore, in the resulting table of shelter spaces, there can be as many as r potential allocations made to the area. Thus, the total funds allocated to the ith area is given by

$$b_i^* = \Sigma b_i = \Sigma \delta_{i\ell} c_{i\ell} a_{i\ell} \qquad \text{(A-20)}$$

summed over all alternatives carrying the subscript for the ith area.

From the above description of the model, it can be seen that a series of cost/effectiveness curves (one for each area) have been developed similar to those shown in Figure A-1.

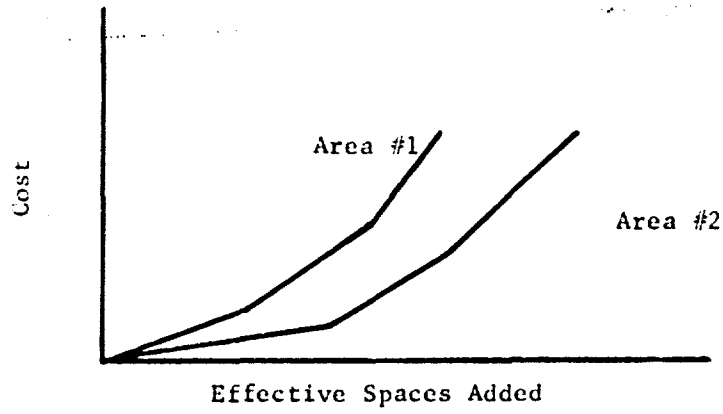

Fig. A-1. Cost/Effectiveness Curves by Area

Note that each of the cost/effectiveness curves are, in practice, a series of line segments, each of which represents a group of shelter spaces that can be added at a constant cost per space.

The spending policy described by Equation A-19 states in effect that the criterion for choosing the next spending is to purchase the shelter spaces described

by the line segment with the least slope. This policy insures that the alternative chosen will be the one which will give the maximum number of adequate spaces added for the expenditure. Hence, the funds are allocated in an optimal manner.

Appendix B

Relationship Between Population Inadequately Sheltered and Casualties

I. MATHEMATICAL PROOF

A. Statement to be Proven

If a Maximum ERD of 200r is chosen, the population inadequately sheltered will, on the average, be equal to the expected number of casualties from fallout, provided the distribution of population receiving ERD's in the range of 100r to 300r is symmetric around 200r.

Let P_D = Pr (an individual chosen at random is made sick if he receives dose D).

Let P(D) = Pr (an individual chosen at random receives dose D or less).

Let p(D) = density function corresponding to the distribution factor P(D).

Assume

$$P_D = \begin{cases} 0 & , D < 100 \\ \frac{D-100}{200} & , 100 \leq D \leq 300 \\ 1 & , D > 300 \end{cases} \qquad \text{(B-1)}$$

1. Theorem

If p(D) is continuous and symmetric about the vertical line (D = 200r) over the range (100r-300r), then the expected number of casualties is equal to the total number of people receiving dose $\geq$ 200r.

2. Proof

Let N = total population

$$\frac{\text{Expected Number of Casualties}}{N} = \int_0^{\infty} P_D \, dP(D) \qquad (3\text{-}2)$$

$$= \int_0^{100} P_D \, dP(D) + \int_{100}^{200} P_D \, dP(D)$$

$$+ \int_{200}^{300} P_D \, dP(D) + \int_{300}^{\infty} P_D \, dP(D)$$

$$= 0 + \int_{100}^{200} \left(\frac{D-100}{200}\right) dP(D) + \int_{200}^{300} \left(\frac{D-100}{200}\right) dP(D)$$

$$+ \int_{300}^{\infty} dP(D)$$

In the first integral, let D = 200 - C, and in the second integral, let D = 200 + C.

Then

$$\frac{\text{Expected Number of Casualties}}{N}$$

$$= \int_{100}^{0} \left(\frac{100-C}{200}\right) dP(200-C) + \int_{0}^{100} \left(\frac{100+C}{200}\right) dP(200+C)$$

$$+ \text{(the proportion of people receiving dose} \geq 300\text{r)}$$

$$= \int_{0}^{100} \left(\frac{100-C}{200}\right) dP(200+C) + \int_{0}^{100} \left(\frac{100+C}{200}\right) dP(200+C)$$

$$+ \text{(the proportion of people receiving dose} \geq 300\text{r)}$$

$$= \int_{0}^{100} dP(200+C) + \text{(the proportion of people receiving dose} \geq 300\text{r)}$$

$$= \int_{200}^{300} dP(D) + \text{(the proportion of people receiving dose} \geq 300\text{r)}$$

$$= \text{the proportion of people receiving dose} \geq 200\text{r.}$$

So the expected number of casualties = the number of people receiving dose $\geq$ 200r.

Appendix C

State Summaries of Case Studies Using the Risk-Oriented Allocation Program

TABLE C-I

State Summary of Case Studies Using the Risk-Oriented Allocation Program
(State 1)

(1) Case	(2) Risk Level	(3) Max ERD (roentgens)	(4) Protection Factors NFSS OR RTI NFSS	(5) Budget (Millions of Dollars)	(6) Variation in Standard Input	(7) Spaces Added (Millions)	(8) Average Cost/Space	(9) Population Inadequately Sheltered
1	95%	100	NFSS	$ 3.93		.43	$ 9.18	.90
2	50	100	NFSS	1.96		.13	15.04	.24
3	95	200	NFSS	3.89		.40	9.81	.68
4	50	200	NFSS	1.20		.09	13.55	.15
5	95	100	RTI	3.96		.40	9.91	.70
6	95	200	RTI	3.37		.33	10.12	.60
7	95	100	NFSS	1.41*		.30	4.72	1.03
8	95	100	NFSS	2.50*		.37	6.73	.96
9	50	100	NFSS	1.37*		.11	12.81	.27
10	95	100	NFSS	4.20	Res. Basements Excluded	.46	9.10	.97
11	50	100	NFSS	1.99	Res. Basements Excluded	.15	13.67	.37
12	95	100	NFSS	4.19	Res. Basements & PF Category 1 Excluded	.45	9.35	.98
13	95	100	NFSS	4.49	Overcrowding Shelters by 25%	.49	9.17	.75
14	95	100	NFSS	1.69	Ventilation Costs Reduced to $3.00	.43	3.95	.90

* A limited budget was assumed in only three cases. An unlimited budget was assumed in all other cases thus allowing all spending alternatives to be exhausted.

TABLE C-II

State Summary of Case Studies Using the Risk-Oriented Allocation Program
(State 2)

(1) Case	(2) Risk Level	(3) Max ERD (roentgens)	(4) Protection Factors NFSS OR RTI NFSS	(5) Budget (Millions of Dollars)	(6) Variation in Standard Input	(7) Spaces Added (Millions)	(8) Average Cost/Space	(9) Population Inadequately Sheltered
1	95%	100	NFSS	$ 7.06		.66	$ 10.73	1.04
2	50	100	NFSS	.87		.10	8.59	.11
3	95	200	NFSS	5.45		.53	10.28	.65
4	50	200	NFSS	.68		.06	11.12	.06
5	95	100	RTI	6.01		.62	9.65	.79
6	95	200	RTI	4.52		.35	12.78	.54
7	95	100	NFSS	1.42*		.35	4.10	1.36
8	95	100	NFSS	3.92*		.53	7.31	1.17
9	50	100	NFSS	.79*		.10	7.92	.11
10	95	100	NFSS	7.62	Res. Basements Excluded	.78	9.76	1.25
11	50	100	NFSS	.90	Res. Basements Excluded	.16	5.59	.11
12	95	100	NFSS	9.29	Res. Basements & PF Category 1 Excluded	.70	13.31	1.33
13	95	100	NFSS	6.36	Overcrowding Shelters by 25%	.62	10.26	.90
14	95	100	NFSS	2.27	Ventilation Costs Reduced to $3.00	.66	3.46	1.04

A limited budget was assumed in only three cases. An unlimited budget was assumed in all other cases thus allowing all spending alternatives to be exhausted.

TABLE C-III

State Summary of Case Studies Using the Risk-Oriented Allocation Program
(State 3)

(1) Case	(2) Risk Level	(3) Max ERD (roentgens)	(4) Protection Factors NFSS OR RTI NFSS	(5) Budget (Millions of Dollars)	(6) Variation in Standard Input	(7) Spaces Added (Millions)	(8) Average Cost/Space	(9) Population Inadequately Sheltered
1	95%	100	NFSS	$ 3.60		.41	$ 8.87	1.27
2	50	100	NFSS	3.47		.32	10.92	.37
3	95	200	NFSS	5.79		.58	9.99	.95
4	50	200	NFSS	2.24		.22	10.09	.29
5	95	100	RTI	5.91		.56	10.59	1.01
6	95	200	RTI	4.87		.50	9.72	.81
7	95	100	NFSS	1.54*		.03	5.38	1.65
8	95	100	NFSS	2.59*		.37	7.08	1.31
9	50	100	NFSS	2.10*		.27	7.70	.42
10	95	100	NFSS	3.60	Res. Basements Excluded	.41	8.87	1.27
11	50	100	NFSS	4.74	Res. Basements Excluded	.59	8.08	.68
12	95	100	NFSS	3.59	Res. Basements & PF Category 1 Excluded	.39	9.12	1.29
13	95	100	NFSS	4.26	Overcrowding Shelters by 25%	.48	8.84	1.13
14	95	100	NFSS	1.32	Ventilation Costs Reduced to $3.00	.41	3.25	1.27

* A limited budget was assumed in only three cases. An unlimited budget was assumed in all other cases thus allowing all spending alternatives to be exhausted.

TABLE C-IV

State Summary of Case Studies Using the Risk-Oriented Allocation Program
(State 4)

(1) Case	(2) Risk Level	(3) Max ERD (roentgens)	(4) Protection Factors NFSS OR RTI NFSS	(5) Budget (Millions of Dollars)	(6) Variation in Standard Input	(7) Spaces Added (Millions)	(8) Average Cost/Space	(9) Population Inadequately Sheltered
1	95%	100	NFSS	$ 9.17		.98	$ 9.33	3.08
2	50	100	NFSS	5.90		.45	13.08	.86
3	95	200	NFSS	11.34		1.00	11.37	1.58
4	50	200	NFSS	5.06		.49	10.24	.54
5	95	100	RTI	11.60		1.01	11.50	1.59
6	95	200	RTI	8.46		.53	15.83	1.47
7	95	100	NFSS	4.75*		.77	6.19	2.29
8	95	100	NFSS	7.41*		.92	8.03	2.14
9	50	100	NFSS	4.74*		.41	11.55	.90
10	95	100	NFSS	9.17	Res. Basements Excluded	.98	9.33	2.08
11	50	100	NFSS	6.02	Res. Basements Excluded	.47	12.91	1.15
12	95	100	NFSS	9.17	Res. Basements & PF Category 1 Excluded	.98	9.36	3.09
13	95	100	NFSS	9.77	Overcrowding Shelters by 25%	1.01	9.67	1.81
14	95	100	NFSS	3.10	Ventilation Costs Reduced to $3.00	.98	3.16	2.08

* A limited budget was assumed in only three cases. An unlimited budget was assumed in all other cases thus allowing all spending alternatives to be exhausted.

TABLE C-V

State Summary of Case Studies Using the Risk-Oriented Allocation Program
(State 5)

(1) Case	(2) Risk Level	(3) Max ERD (roentgens)	(4) Protection Factors NFSS OR RTI NFSS	(5) Budget (Millions of Dollars)	(6) Variation in Standard Input	(7) Spaces Added (Millions)	(8) Average Cost/Space	(9) Population Inadequately Sheltered
1	95%	100	NFSS	$ 2.64		20	$ 12.98	1.00
2	50	100	NFSS	2.05		.17	12.18	.10
3	95	200	NFSS	4.26		.36	11.74	.64
4	50	200	NFSS	.88		.11	8.17	.05
5	95	100	RTI	4.35		.34	12.85	.69
6	95	200	RTI	4.82		.37	13.07	.49
7	95	100	NFSS	.63*		.11	5.89	1.10
8	95	100	NFSS	2.01*		.18	11.23	1.02
9	50	100	NFSS	.86*		.13	6.80	.15
10	95	100	NFSS	2.67	Res. Basements Excluded	.21	13.00	1.03
11	50	100	NFSS	2.17	Res. Basements Excluded	.18	12.33	.18
12	95	100	NFSS	2.67	Res. Basements & PF Category 1 Excluded	.20	13.47	1.04
13	95	100	NFSS	3.24	Overcrowding Shelters by 25%	.25	12.99	.90
14	95	100	NFSS	.65	Ventilation Costs Reduced to $3.00	.20	3.18	1.00

* A limited budget was assumed in only three cases. An unlimited budget was assumed in all other cases thus allowing all spending alternatives to be exhausted.

TABLE C-VI

State Summary of Case Studies Using the Risk-Oriented Allocation Program
(State 6)

(1) Case	(2) Risk Level	(3) Max ERD (roentgens)	(4) Protection Factors NFSS OR RTI NFSS	(5) Budget (Millions of Dollars)	(6) Variation in Standard Input	(7) Spaces Added (Millions)	(8) Average Cost/Space	(9) Population Inadequately Sheltered
1	95%	100	NFSS	$ 1.35		.11	$ 12.79	.28
2	50	100	NFSS	.22		.03	8.29	.02
3	95	200	NFSS	1.66		.13	12.51	.15
4	50	200	NFSS	.22		.03	7.17	.01
5	95	100	RTI	1.75		.13	13.23	.17
6	95	200	RTI	1.25		.10	12.56	.11
7	95	100	NFSS	.05*		.03	1.35	.35
8	95	100	NFSS	6.76*		.08	8.59	.30
9	50	100	NFSS	1.01*		.02	4.66	.02
10	95	100	NFSS	1.58	Res. Basements Excluded	.17	9.38	.37
11	50	100	NFSS	.46	Res. Basements Excluded	.05	10.10	.02
12	95	100	NFSS	2.00	Res. Basements & PF Category 1 Excluded	.13	15.17	.40
13	95	100	NFSS	1.54	Overcrowding Shelters by 25%	.11	13.42	.23
14	95	100	NFSS	.32	Ventilation Costs Reduced to $3.00	.11	3.00	.28

* A limited budget was assumed in only three cases. An unlimited budget was assumed in all other cases thus allowing all spending alternatives to be exhausted.

TABLE C-VII

State Summary of Case Studies Using the Risk-Oriented Allocation Program
(State 7)

(1) Case	(2) Risk Level	(3) Max ERD (Roentgens)	(4) Protection Factors NFSS OR RTI NFSS	(5) Budget (Millions of Dollars)	(6) Variation in Standard Input	(7) Spaces Added (Millions)	(8) Average Cost/Space	(9) Population Inadequately Sheltered
1	95%	100	NFSS	$ 1.41		.15	$ 9.67	.18
2	50	100	NFSS	.14		.001	16.06	.001
3	95	200	NFSS	1.26		.14	8.76	.12
4	50	200	NFSS	.00		.00	.00	.00
5	95	100	RTI	1.26		.14	8.76	.13
6	95	200	RTI	.82		.12	6.72	.09
7	95	100	NFSS	.10*		.07	1.36	.25
8	95	100	NFSS	.56*		.10	5.38	.22
9	50	100	NFSS	.01*		.001	10.50	.002
10	95	100	NFSS	2.26	Res. Basements Excluded	.20	11.09	.32
11	50	100	NFSS	.01	Res. Basements Excluded	.001	16.06	.004
12	95	100	NFSS	2.30	Res. Basements & PF Category 1 Excluded	.13	17.53	.40
13	95	100	NFSS	1.58	Overcrowding Shelters by 25%	.12	13.25	.14
14	95	100	NFSS	.41	Ventilation Costs Reduced to $3.00	.14	3.00	.19

* A limited budget was assumed in only three cases. An unlimited budget was assumed in all other cases thus allowing all spending alternatives to be exhausted.

TABLE C-VIII

State Summary of Case Studies Using the Risk-Oriented Allocation Program
(State 8)

(1) Case	(2) Risk Level	(3) Max ERD (roentgens)	(4) Protection Factors NFSS OR RTI NFSS	(5) Budget (Millions of Dollars)	(6) Variation in Standard Input	(7) Spaces Added (Millions)	(8) Average Cost/Space	(9) Population Inadequately Sheltered
1	95%	100	NFSS	$ 1.04		.96	$ 10.91	.12
2	50	100	NFSS	.38		.003	14.27	.0[1]
3	95	200	NFSS	.80		.08	10.48	.09
4	50	200	NFSS	.00		.00	.00	.00
5	95	100	RTI	.99		.10	9.82	.10
6	95	200	RTI	.59		.05	10.91	.07
7	95	100	NFSS	.12*		.05	2.43	.17
8	95	100	NFSS	.34*		.07	5.00	.15
9	50	100	NFSS	.04*		.003	14.27	.01
10	95	100	NFSS	1.06	Res. Basements Excluded	.10	10.73	.16
11	50	100	NFSS	.04	Res. Basements Excluded	.003	14.27	.01
12	95	100	NFSS	1.05	Res. Basements & PF Category 1 Excluded	.08	12.60	.17
13	95	100	NFSS	1.10	Overcrowding Shelters by 25%	.10	10.61	.09
14	95	100	NFSS	.29	Ventilation Costs Reduced to $3.00	.10	3.07	.12

* A limited budget was assumed in only three cases. An unlimited budget was assumed in all other cases thus allowing all spending alternatives to be exhausted.

Appendix D

The Risk-Oriented Allocation Program

1. INTRODUCTION

A. Program Description

Because of the magnitude of the problem involved in allocating funds among a large number of areas, a computer program has been developed to perform the function described in Appendix A. The program was written in FORTRAN 63 for the CDC 3600. The FORTRAN statements and the associated flow diagrams are shown in sections 5a and 5b of this Appendix.

1. Input Data

The basic input data (the existing shelter spaces, potential new shelter spaces, costs, population, and a fallout environment) is put in by magnetic tape. All these data are accumulated by some geographic area. The program, as well as the allocation technique itself, was tested by using the county as the accumulation unit. Thus, the input data are stored internally as a series of matrices, and row and column vectors. For example, Table D-I illustrates the manner in which the existing shelter spaces are stored internally. The potential new shelter spaces and their associated costs per space are stored in similar matrix arrays. Associated with the protection categories of both the existing and potential shelter spaces are data regarding the protection factor of each of the protection categories. This information is supplied in the form of control cards along with the computer program.

The computer program and selected control cards are put in by cards before each run. Since control of the program is exercised by the control cards, maintaining this information on cards facilitates making changes in the major parameters between runs.

2. Set Modifications

The principal function of the computer program is to perform a risk-oriented allocation of funds among the areas described in the input data, by the procedure

TABLE D-I

Illustration of Input Data

Area \ Shelter Classifications*	1	2	3	4	5	6	7	8	9	10
County 1	10,000	4000	5000	1000	100	500	300	0	500	0
2	25,000	8200	3000	500	300	800	500	100	0	100
3	5,000	1000	1000	1000	200	0	0	0	0	0
.										
.										
.										
m	8,000	5000	5000	800	0	0	0	100	500	600
.										
.										
.										

* Possible Identification of protection categories:

Shelter Classifications	Identification	Protection Factor
1	Residential dwellings	2
2	Residential basements	10
3	PF Category 1	20
4	PF Category 2	40
5	PF Category 3	70
6	PF Category 4	100
7	PF Category 5	250
8	PF Category 6	500
9	PF Category 7	750
10	PF Category 8	1000

described in Appendix A. However, the computer program contains other features designed to facilitate a more comprehensive analysis of civil defense spending for fallout shelter development. Most prominent among these is a feature called set modification.

This set-modification feature allows for arithmetic operations to be performed on a single number or certain sets of numbers in the input data by the use of a single control card. For example, suppose it was desired to evaluate the effects of overcrowding in the existing shelter spaces by say 25 percent on the allocation of funds and the resulting shelter status. To accomplish this, two computer runs would be required. In the first run, the existing

shelter spaces could consist of those spaces identified in the NFSS-Phase 2 data. In the second run, a control card would be introduced which would serve to increase the number of shelter spaces in all counties and all protection categories by 25 percent. If so desired, the same type of analysis could be performed, after allowing overcrowding in only certain areas and/or for certain categories of shelters.

As another example of the use of set modifications, suppose it was desired to evaluate the effect of considering residential basements as potential shelter spaces upon the shelter status of the nation and upon a risk-oriented allocation of shelter funds. Here again, two runs would be needed. In the first run, residential basement data for each area would be included as existing shelter spaces. In the second run, a control card would be used to eliminate all shelter spaces in the protection category designated for residential basements. (This is accomplished by multiplying the number of spaces in the column designated for residential basement data by zero.)

3. Computer Processing

As mentioned above, the primary objective of the computer program is to perform a risk-oriented allocation of shelter-development funds among areas (e.g., counties) of the nation, to assess the shelter posture both before and after the allocation of funds, and to evaluate the overall cost/effectiveness of the expenditures resulting from the allocation. Several case studies have been run on the CDC 3600 computer at the county level for Region 6 using all available data on existing shelter spaces and potential new shelter spaces. The computer processing time required for these runs ranged from two to three minutes per study. A similar analysis for all of the eight regions (over 3000 counties) would require an estimated twenty minutes of computer time.

4. Computer Output

Table D-II is an illustration of the computer output taken from one of the case studies. The column headings are defined as follows:

STATE CODE -	A numerical code of the state
AREA CODE -	A numerical code of the areas to which funds are to be distributed. For the application discussed below, this is a county code.
RESIDENTIAL POPULATION -	Residential population in each area.

% INEFFECTIVELY SHELTERED POPULATION -	The number of persons considered inadequately sheltered as a function of the fallout environment and the existing shelter posture of the population in each county.
TOTAL POTENTIAL SPACES -	The total number of new or improvable shelter spaces that have been identified as eligible for fallout shelter development funds.
TOTAL SPACES ADDED -	The number of fallout shelter spaces added in each area as a result of the risk-oriented distribution of funds for OCD Region 6.
AVERAGE COST/SPACE ADDED -	The average cost of all of the spaces added in each area.
% INEFFECTIVELY SHELTERED AFTER EXPENDITURE -	The number of persons remaining inadequately sheltered as a percentage of the total population after the funds have been distributed and the appropriate spaces have been added.
DISTRIBUTION OF FUNDS -	The total dollar expenditures in each area as a result of the risk-oriented allocation of funds. Note that this is a function of (1) The fallout environment, (2) the availability spending alternatives for improving the shelter status of the population, (3) the cost of the new or improvable shelter spaces, and (4) the adequacy of the existing shelter status of the population.

Also note from Table D-II that the above information is summarized for each state.

TABLE D-II

Illustrative Risk-Oriented Shelter Budget Allocation
(Distribution of $20,000,000 Among Counties in Region 6)

State Code	County Code	Residential Population	% Ineffectively Sheltered Population	Total Potential Spaces	Total Spaces Added	Avg. Cost/ Space Added	% Ineffective After Expenditure	Total Improvement Cost
1	1	143745	89.8	7026	7026	$ 9.51	85.0	$ 66817
1	2	120296	94.1	5867	5867	5.75	89.2	33734
1	3	113426	95.7	23164	16014	20.63	81.6	330420
1	4	74254	83.9	21808	14344	7.34	64.6	105323
1	5	493891	70.9	183058	183058	5.19	33.9	950837
•	•	•	•	•	•	•	•	•
•	•	•	•	•	•	•	•	•
•	•	•	•	•	•	•	•	•
State Totals		1753954	75.9	427758	371904	6.73	54.7	2504008
2	1	136899	32.0	43815	29666	7.07	10.3	209675
2	2	119067	58.0	69111	51908	8.05	14.4	417783
2	3	266315	63.8	104846	104846	7.75	24.4	812504
2	4	80048	0.0	0	0	0.00	0.0	0
2	5	83102	93.7	9437	9437	8.62	82.3	81359
•	•	•	•	•	•	•	•	•
•	•	•	•	•	•	•	•	•
•	•	•	•	•	•	•	•	•
State Totals		2757897	61.7	658041	534798	7.33	42.3	3918299
Regional Totals		14064841	70.7	3016000	2624000	7.62	51.8	$20,000,000

Cost of Next Space Added = $25.00

5. Flow Diagrams

a. Generalized Flow Diagram

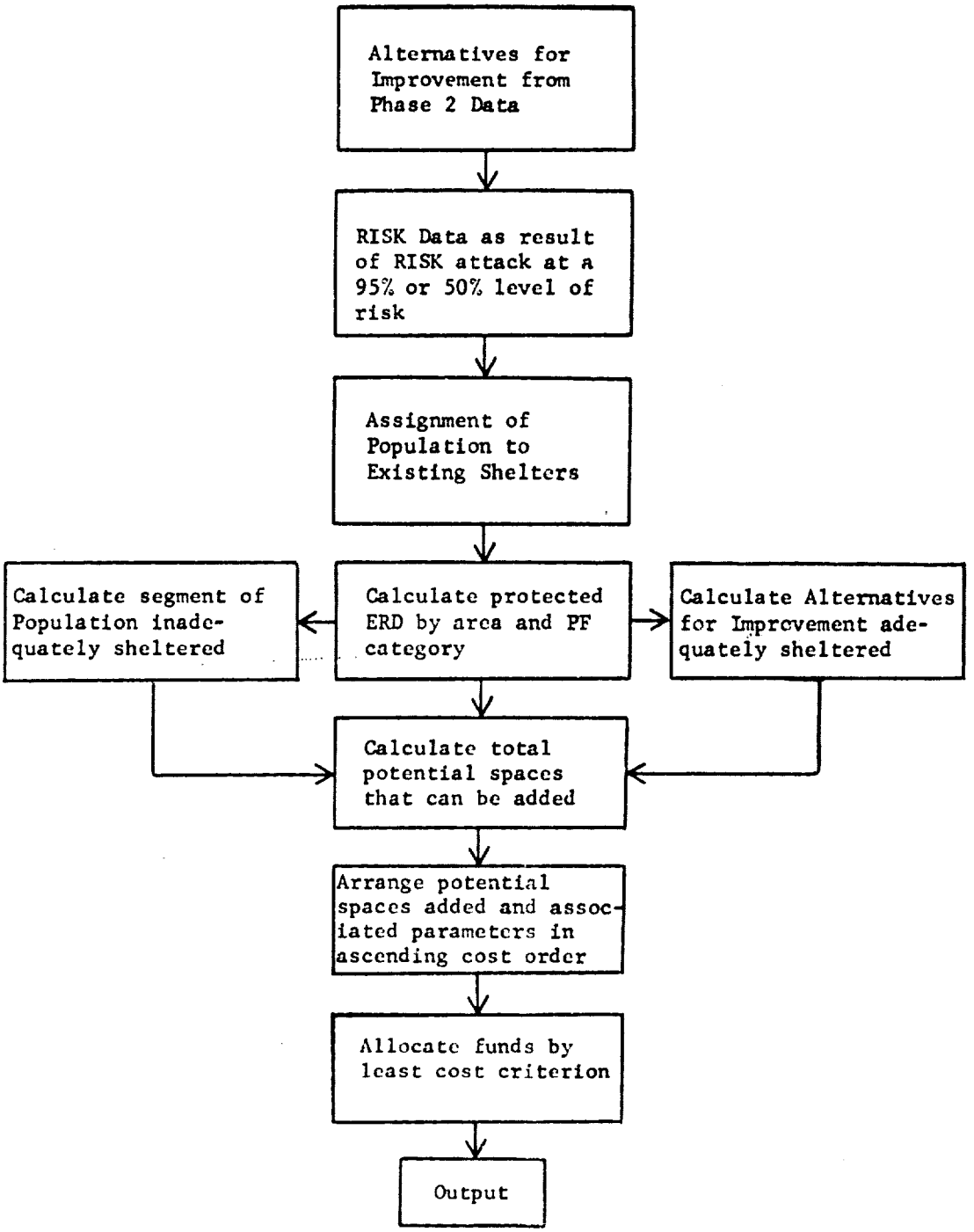

b. Detailed Flow Diagram

Program Go/No-Go

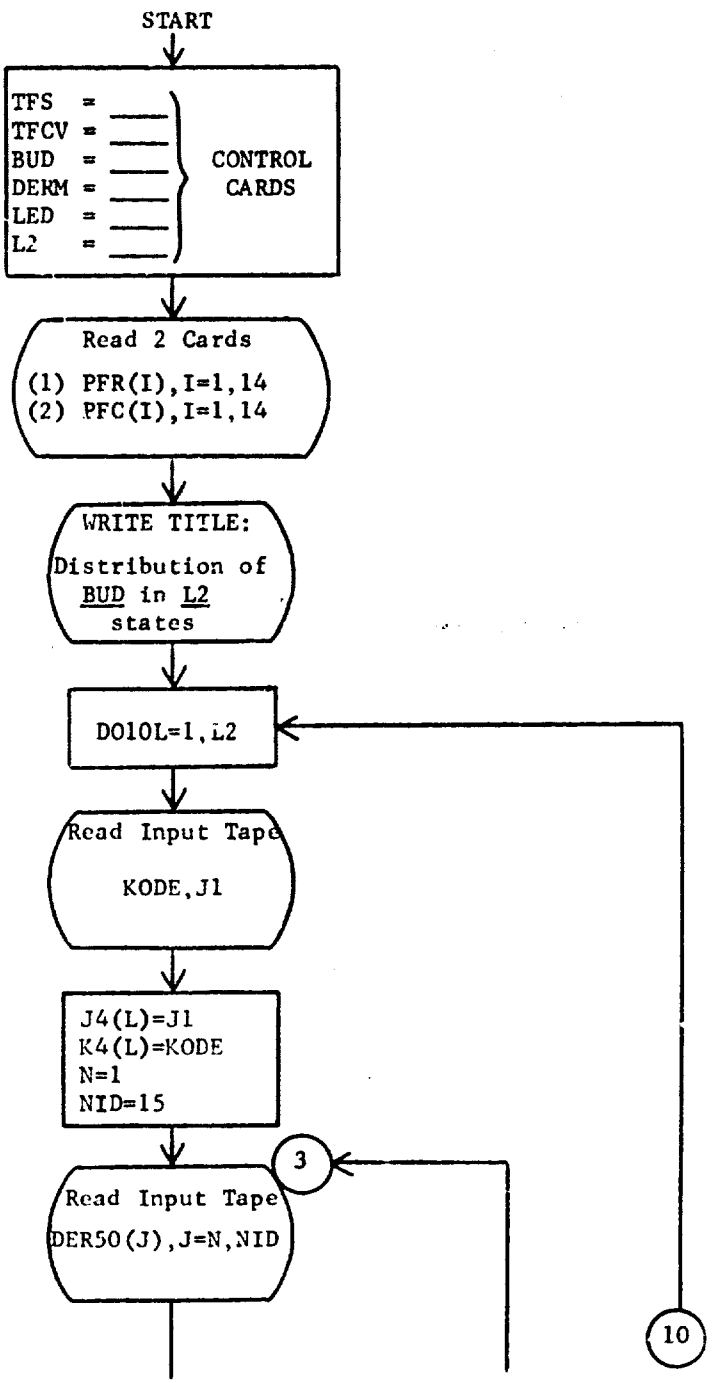

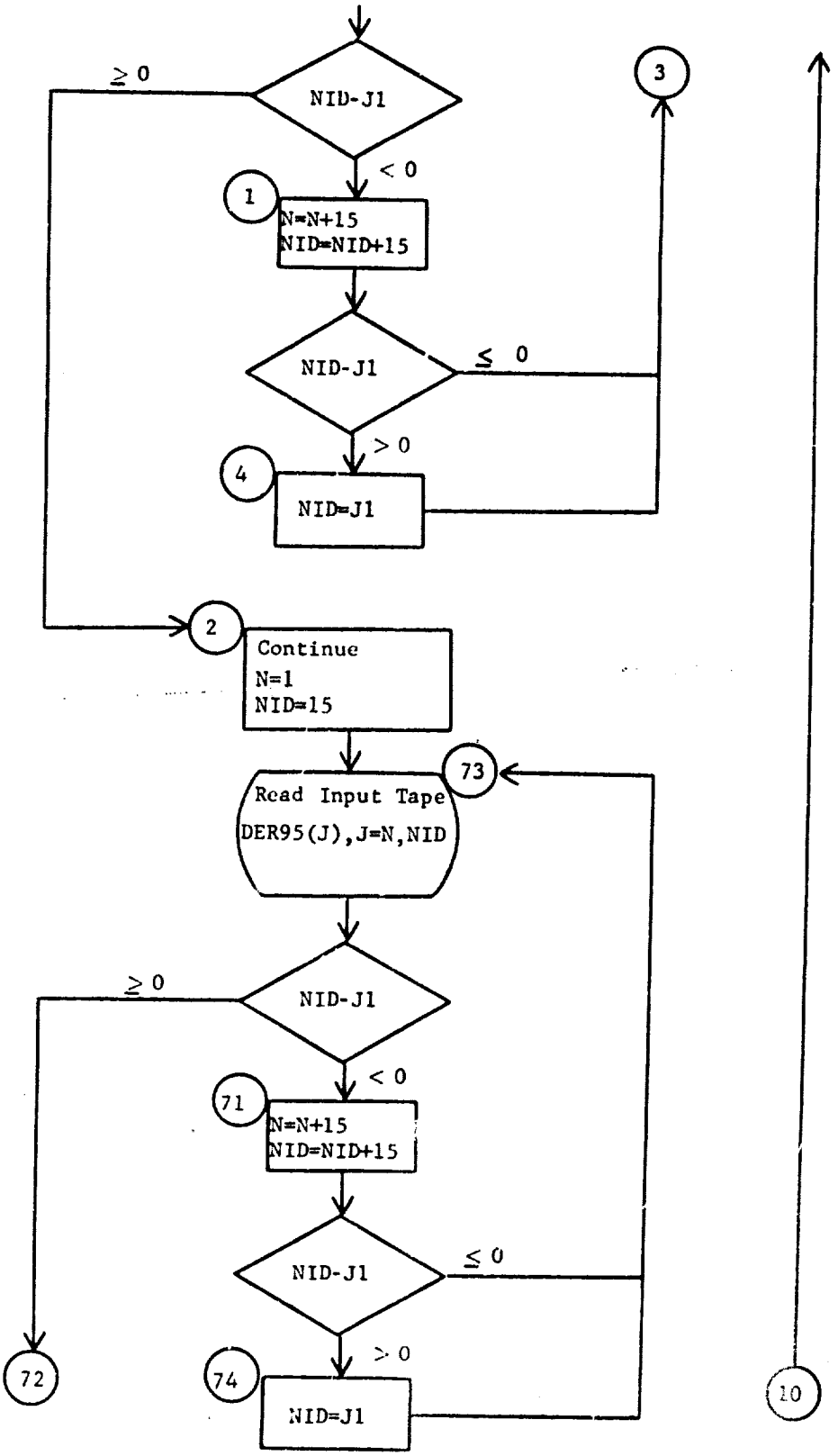
NID-J1
≥ 0
< 0
1
N=N+15
NID=NID+15
NID-J1
≤ 0
> 0
4
NID=J1
3
2
Continue
N=1
NID=15
73
Read Input Tape
DER95(J),J=N,NID
NID-J1
≥ 0
< 0
71
N=N+15
NID=NID+15
NID-J1
≤ 0
> 0
74
NID=J1
72
10

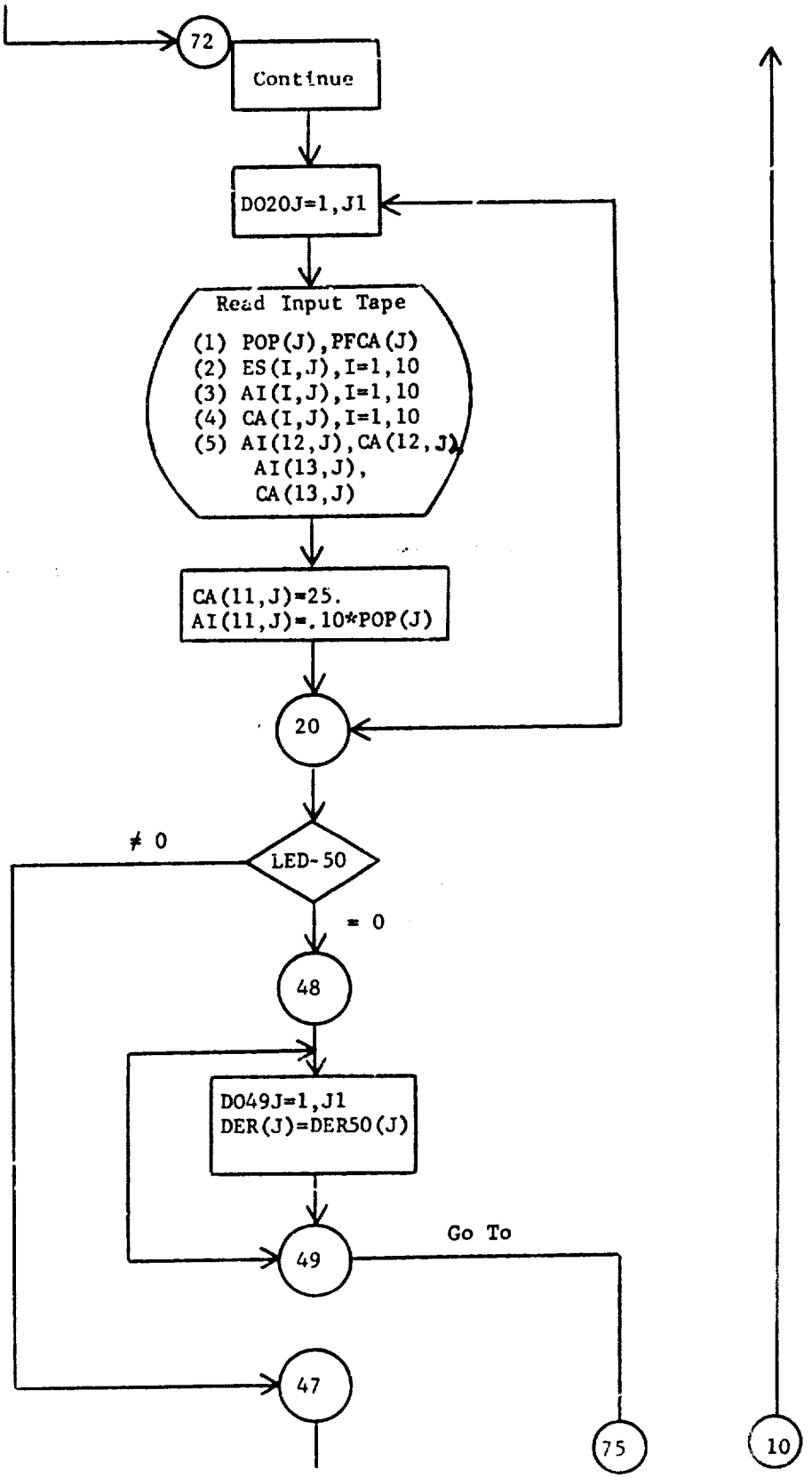
72
Continue
DO20J=1,J1
Read Input Tape
(1) POP(J),PFCA(J)
(2) ES(I,J),I=1,10
(3) AI(I,J),I=1,10
(4) CA(I,J),I=1,10
(5) AI(12,J),CA(12,J),
AI(13,J),
CA(13,J)
CA(11,J)=25.
AI(11,J)=.10*POP(J)
20
≠ 0
LED-50
= 0
48
DO49J=1,J1
DER(J)=DER50(J)
49
Go To
47
75
10

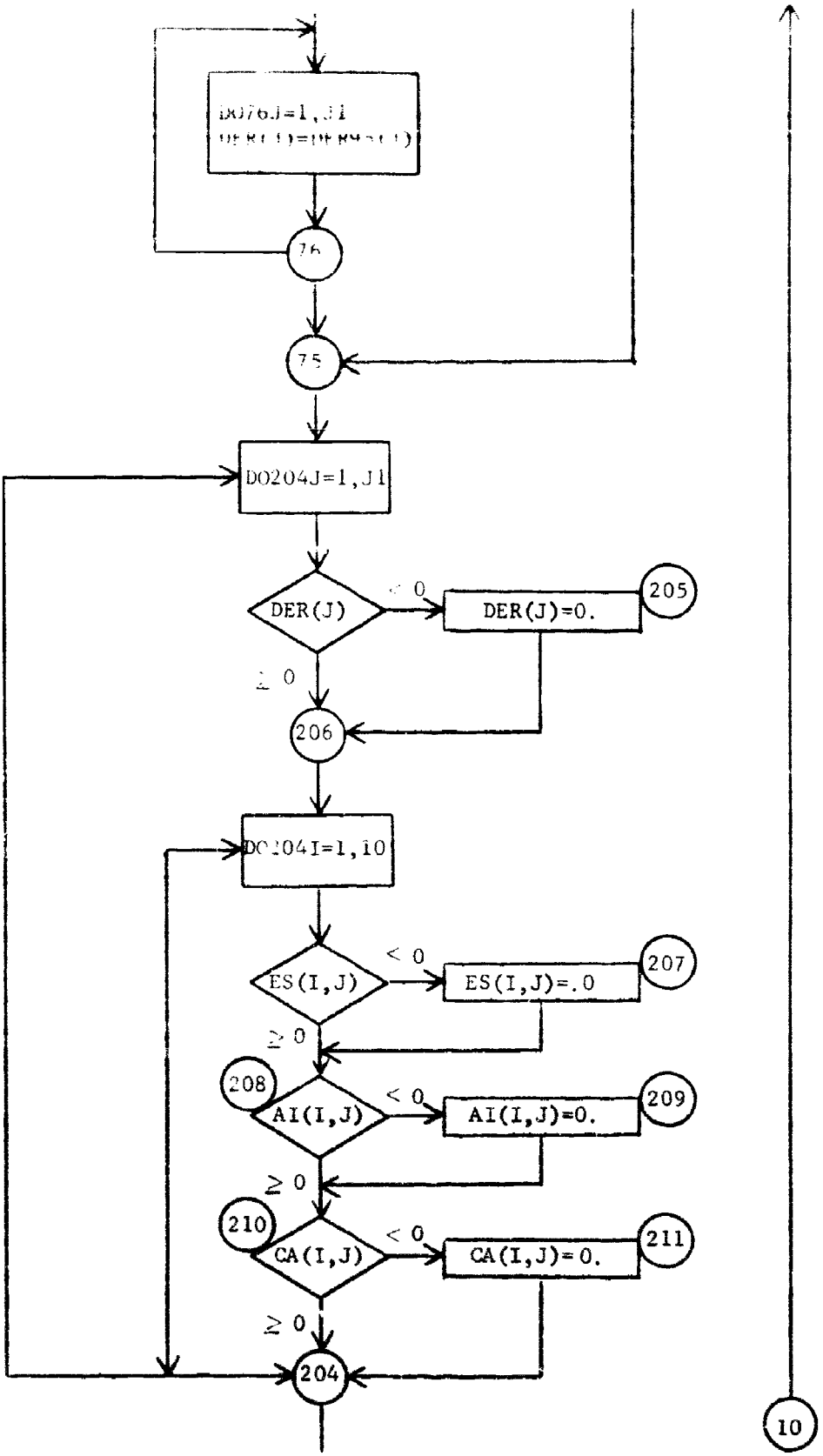
DO76J=1,J1
76
75
DO204J=1,J1
DER(J)
< 0
DER(J)=0.
205
≥ 0
206
DO204I=1,10
ES(I,J)
< 0
ES(I,J)=.0
207
≥ 0
208
AI(I,J)
< 0
AI(I,J)=0.
209
≥ 0
210
CA(I,J)
< 0
CA(I,J)=0.
211
≥ 0
204
10

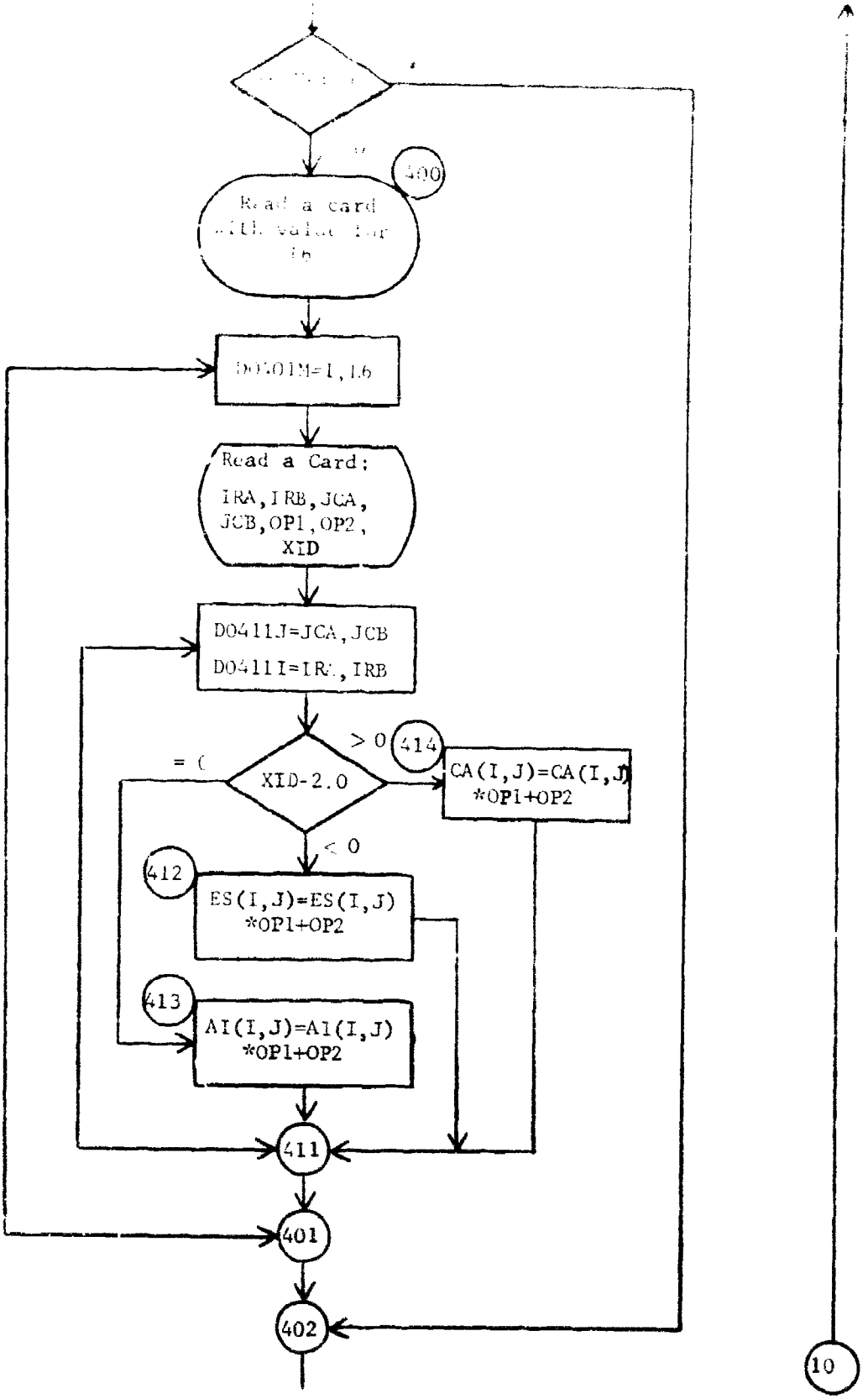
400
Read a card
with value for
I6
DO401M=1,16
Read a Card;
IRA,IRB,JCA,
JCB,OP1,OP2,
XID
DO411J=JCA,JCB
DO411I=IRA,IRB
XID-2.0
> 0
414
CA(I,J)=CA(I,J)
*OP1+OP2
= 0
< 0
412
ES(I,J)=ES(I,J)
*OP1+OP2
413
AI(I,J)=AI(I,J)
*OP1+OP2
411
401
402
10

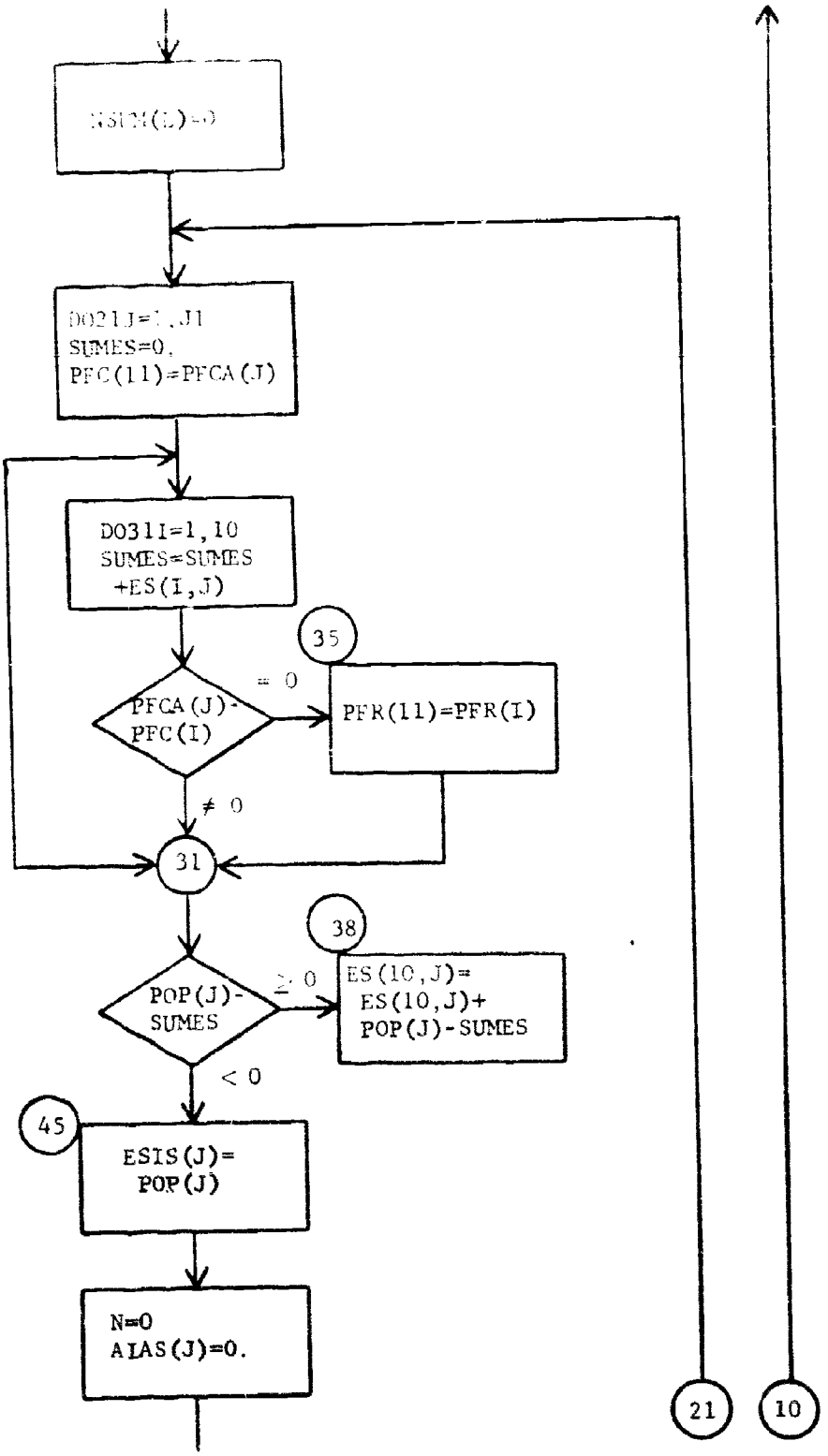
NSUM(L)=0
DO21J=1,J1
SUMES=0.
PFC(11)=PFCA(J)
DO31I=1,10
SUMES=SUMES
+ES(I,J)
35
PFCA(J)-
PFC(I)
= 0
PFR(11)=PFR(I)
≠ 0
31
38
POP(J)-
SUMES
≥ 0
ES(10,J)=
ES(10,J)+
POP(J)-SUMES
< 0
45
ESIS(J)=
POP(J)
N=0
AIAS(J)=0.
21
10

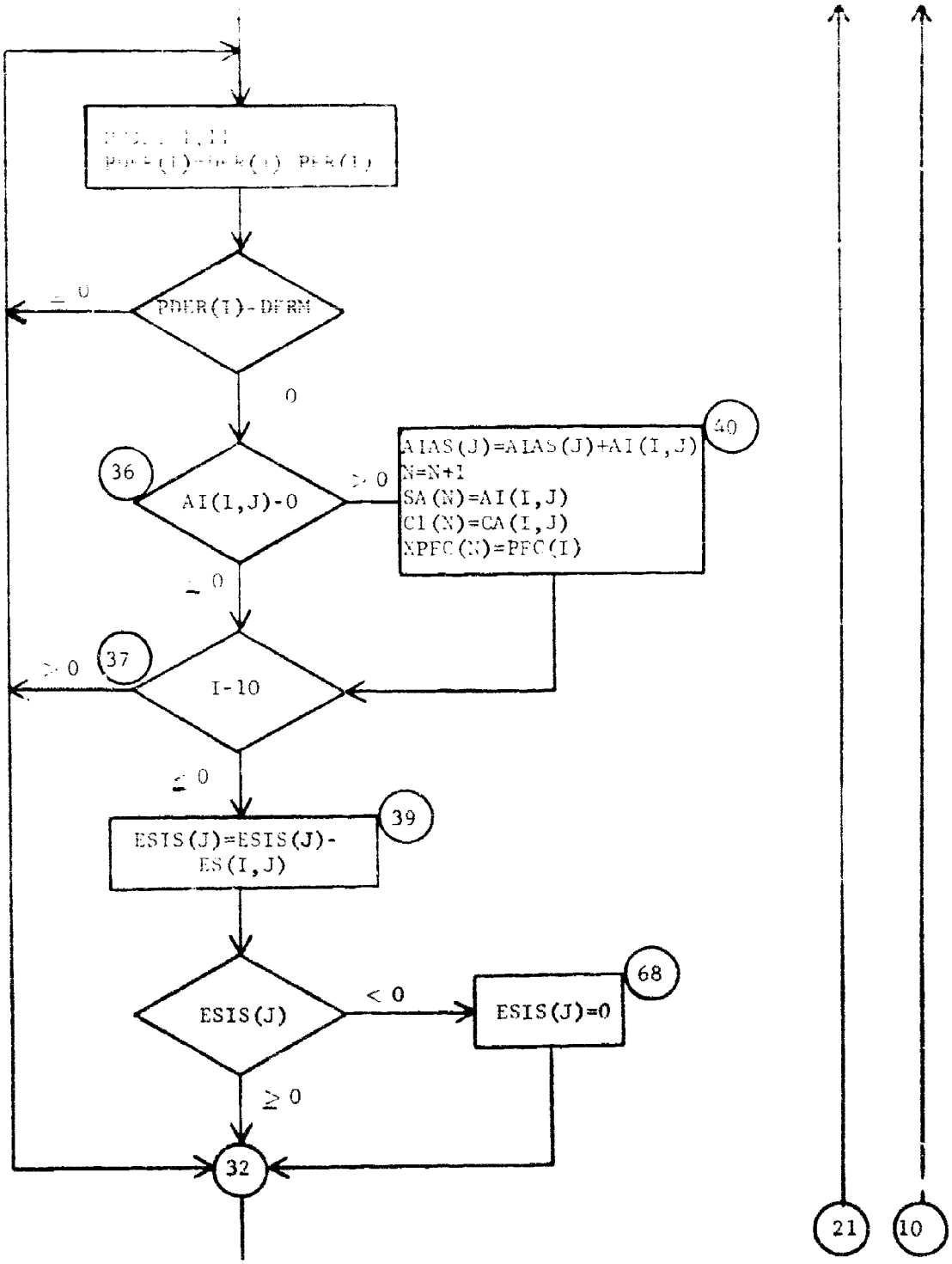
PDER(I)-DFRM
≤ 0
0
36
AI(I,J)-0
> 0
40
AIAS(J)=AIAS(J)+AI(I,J)
N=N+1
SA(N)=AI(I,J)
C1(N)=CA(I,J)
XPFC(N)=PFC(I)
≤ 0
37
≥ 0
I-10
≤ 0
39
ESIS(J)=ESIS(J)-
ES(I,J)
ESIS(J)
< 0
68
ESIS(J)=0
≥ 0
32
21
10

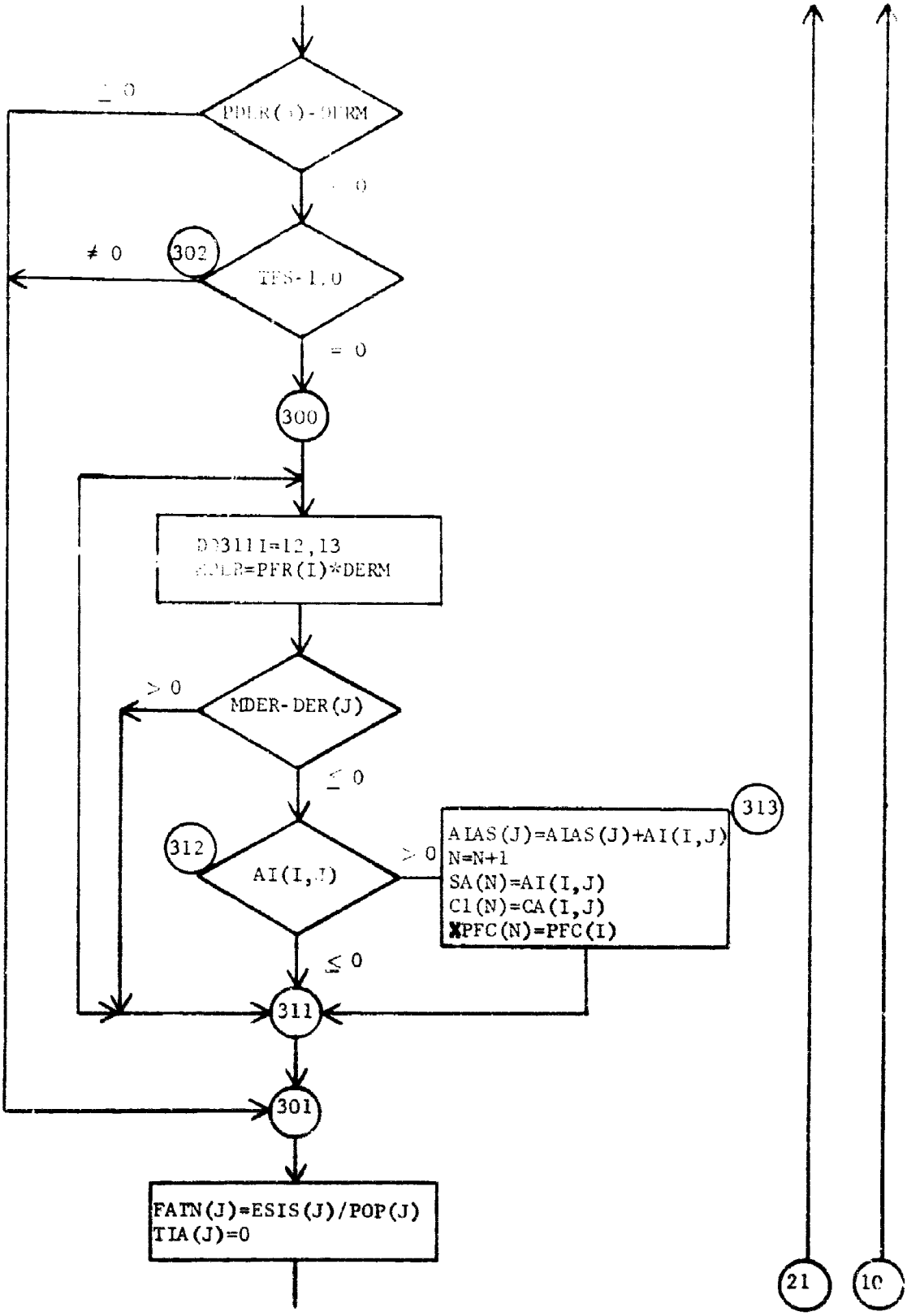
≤ 0
PDER(I)-DERM
> 0
≠ 0
302
TFS-1.0
= 0
300
DO311 I=12,13
PDER=PFR(I)*DERM
≥ 0
MDER-DER(J)
≤ 0
312
AI(I,J)
≥ 0
313
ALAS(J)=ALAS(J)+AI(I,J)
N=N+1
SA(N)=AI(I,J)
C1(N)=CA(I,J)
XPFC(N)=PFC(I)
≤ 0
311
301
FATN(J)=ESIS(J)/POP(J)
TIA(J)=0
21
10

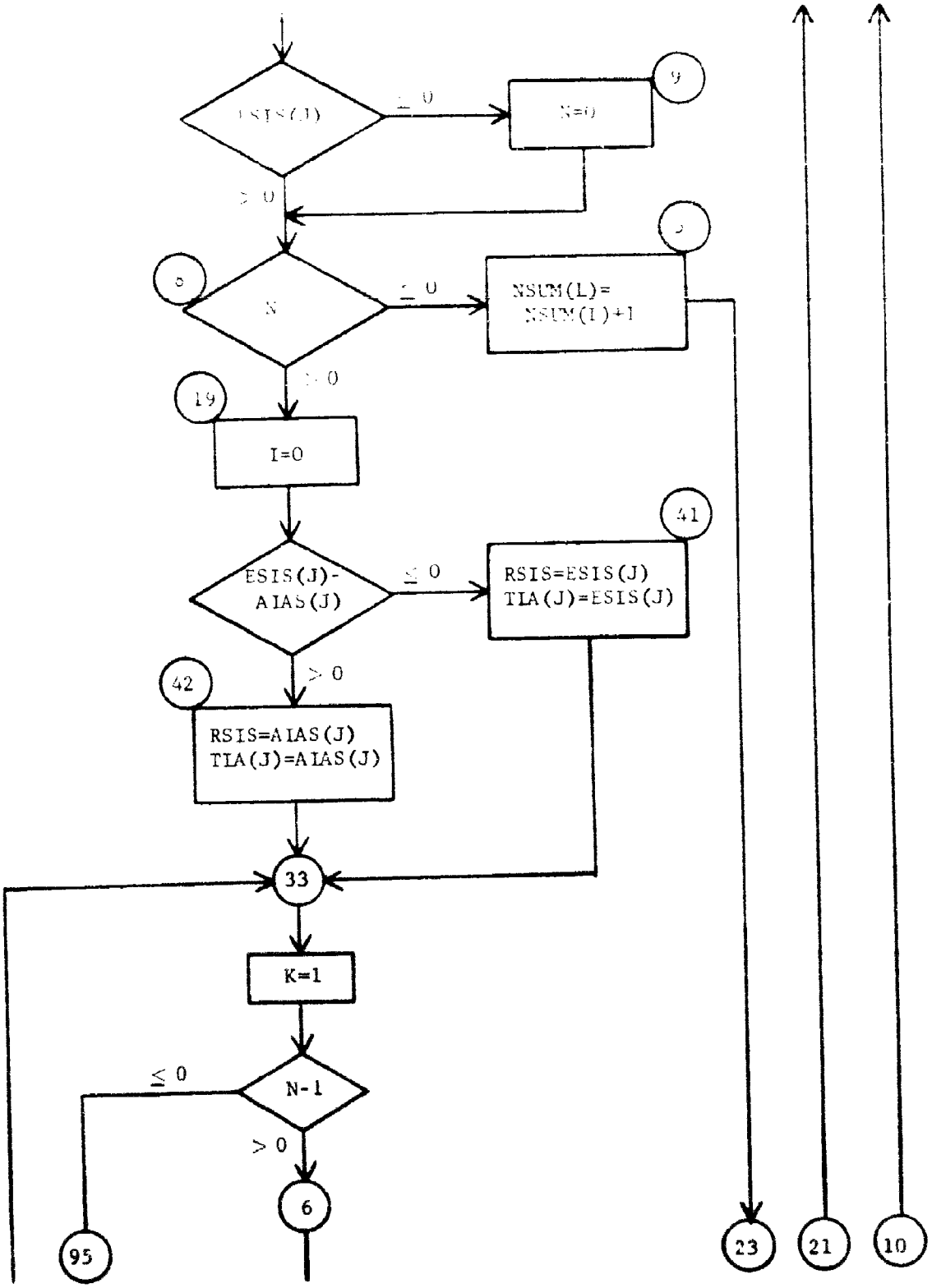
ESIS(J)
≤ 0
9
N=0
> 0
N
≤ 0
NSUM(L)=
NSUM(L)+1
> 0
19
I=0
ESIS(J)-
AIAS(J)
≤ 0
41
RSIS=ESIS(J)
TIA(J)=ESIS(J)
> 0
42
RSIS=AIAS(J)
TIA(J)=AIAS(J)
33
K=1
N-1
≤ 0
> 0
6
95
23
21
10

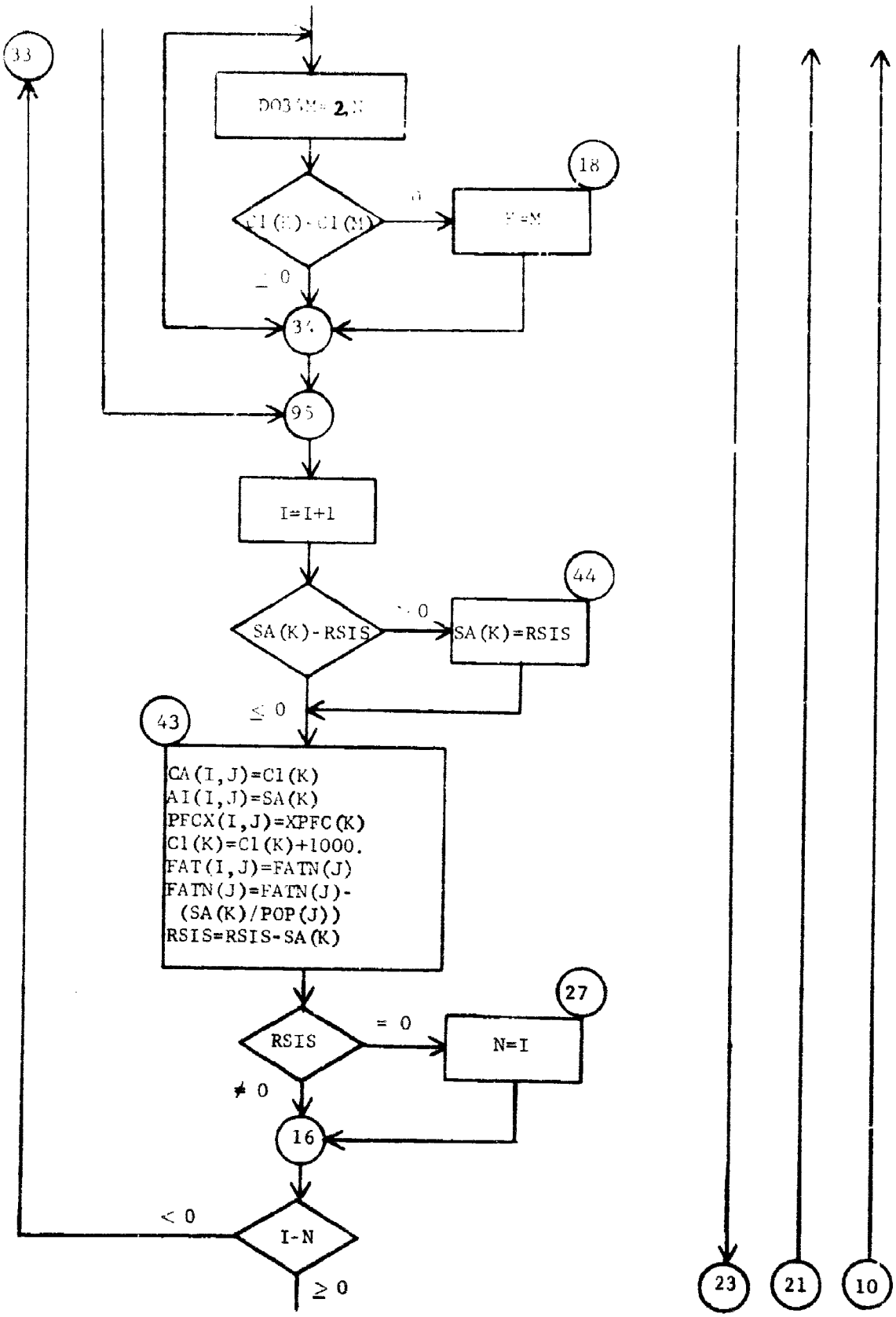
33
DO34M= 2,N
18
C1(K)-C1(M)
0
K=M
≥ 0
34
95
I=I+1
44
SA(K)-RSIS
> 0
SA(K)=RSIS
≤ 0
43
CA(I,J)=C1(K)
AI(I,J)=SA(K)
PFCX(I,J)=XPFC(K)
C1(K)=C1(K)+1000.
FAT(I,J)=FATN(J)
FATN(J)=FATN(J)-
(SA(K)/POP(J))
RSIS=RSIS-SA(K)
27
RSIS
= 0
N=I
≠ 0
16
< 0
I-N
≥ 0
23
21
10

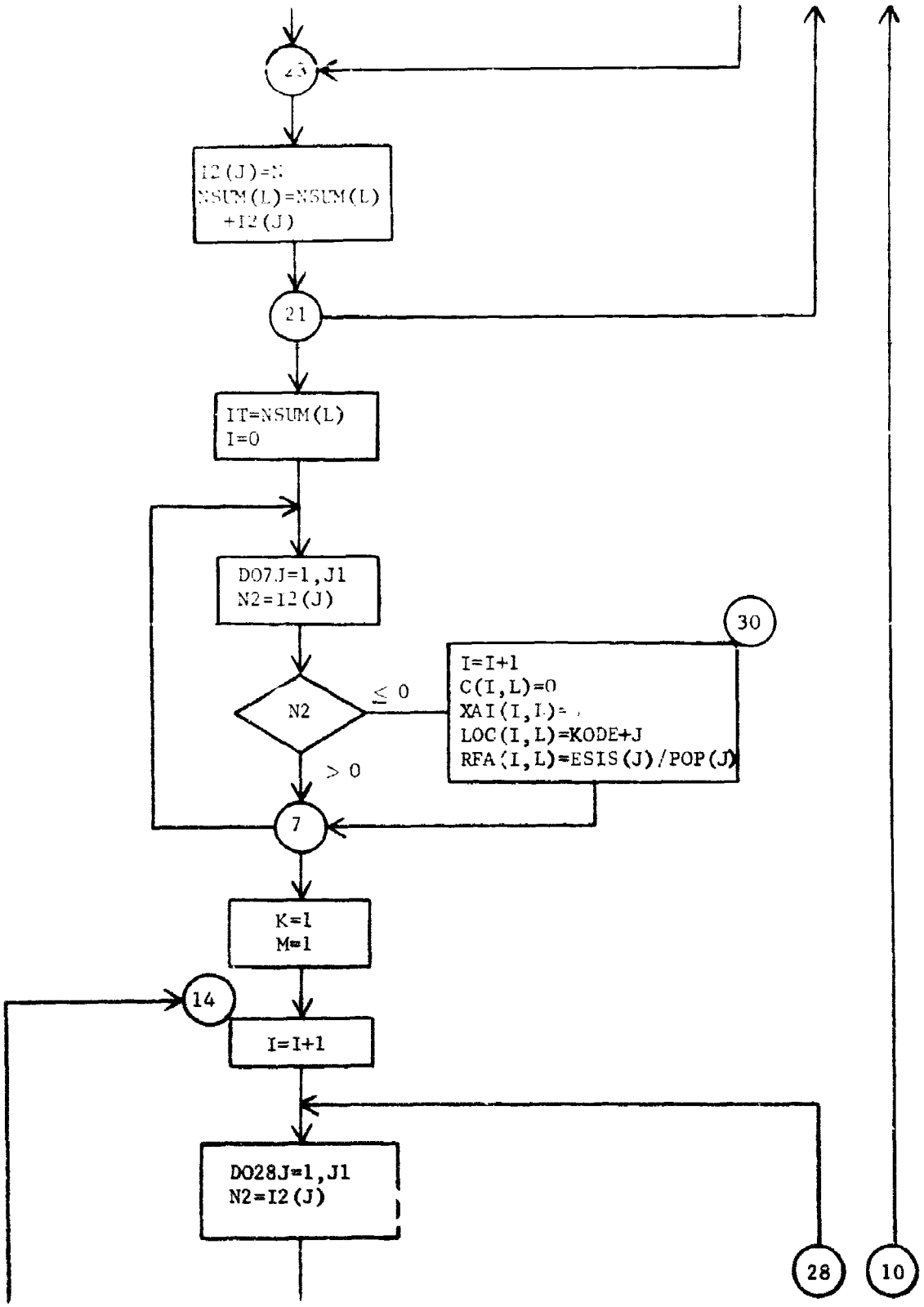
23
I2(J)=N
NSUM(L)=NSUM(L)
+I2(J)
21
IT=NSUM(L)
I=0
DO7J=1,J1
N2=I2(J)
30
N2
≤ 0
I=I+1
C(I,L)=0
XAI(I,I)=
LOC(I,L)=KODE+J
RFA(I,L)=ESIS(J)/POP(J)
> 0
7
K=1
M=1
14
I=I+1
DO28J=1,J1
N2=I2(J)
28
10

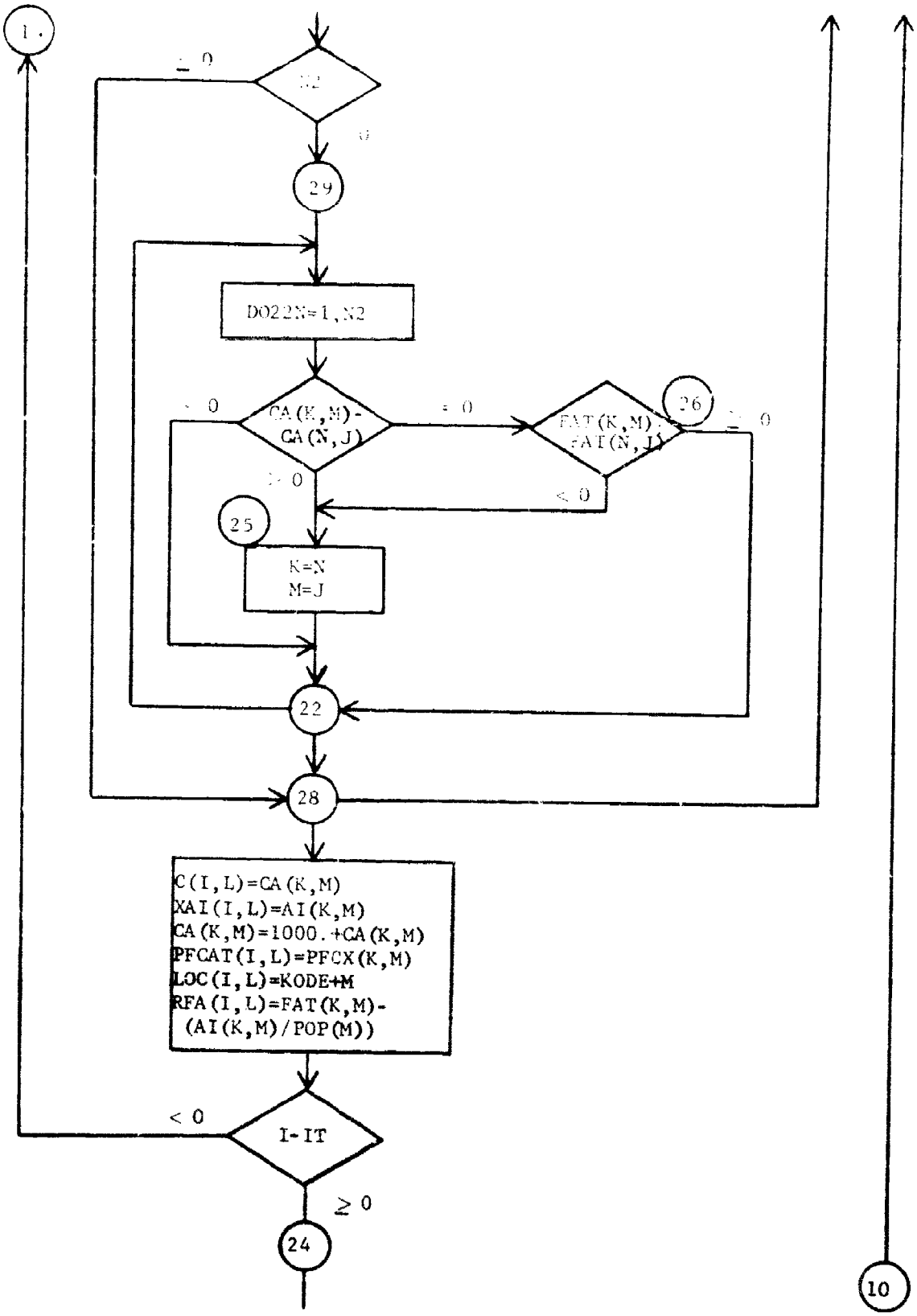
1
≤ 0
N2
0
29
DO22N=1,N2
< 0
CA(K,M)-
CA(N,J)
= 0
FAT(K,M)
-AI(N,J)
26
≥ 0
≥ 0
< 0
25
K=N
M=J
22
28
C(I,L)=CA(K,M)
XAI(I,L)=AI(K,M)
CA(K,M)=1000.+CA(K,M)
PFCAT(I,L)=PFCX(K,M)
LOC(I,L)=KODE+M
RFA(I,L)=FAT(K,M)-
(AI(K,M)/POP(M))
< 0
I-IT
≥ 0
24
10

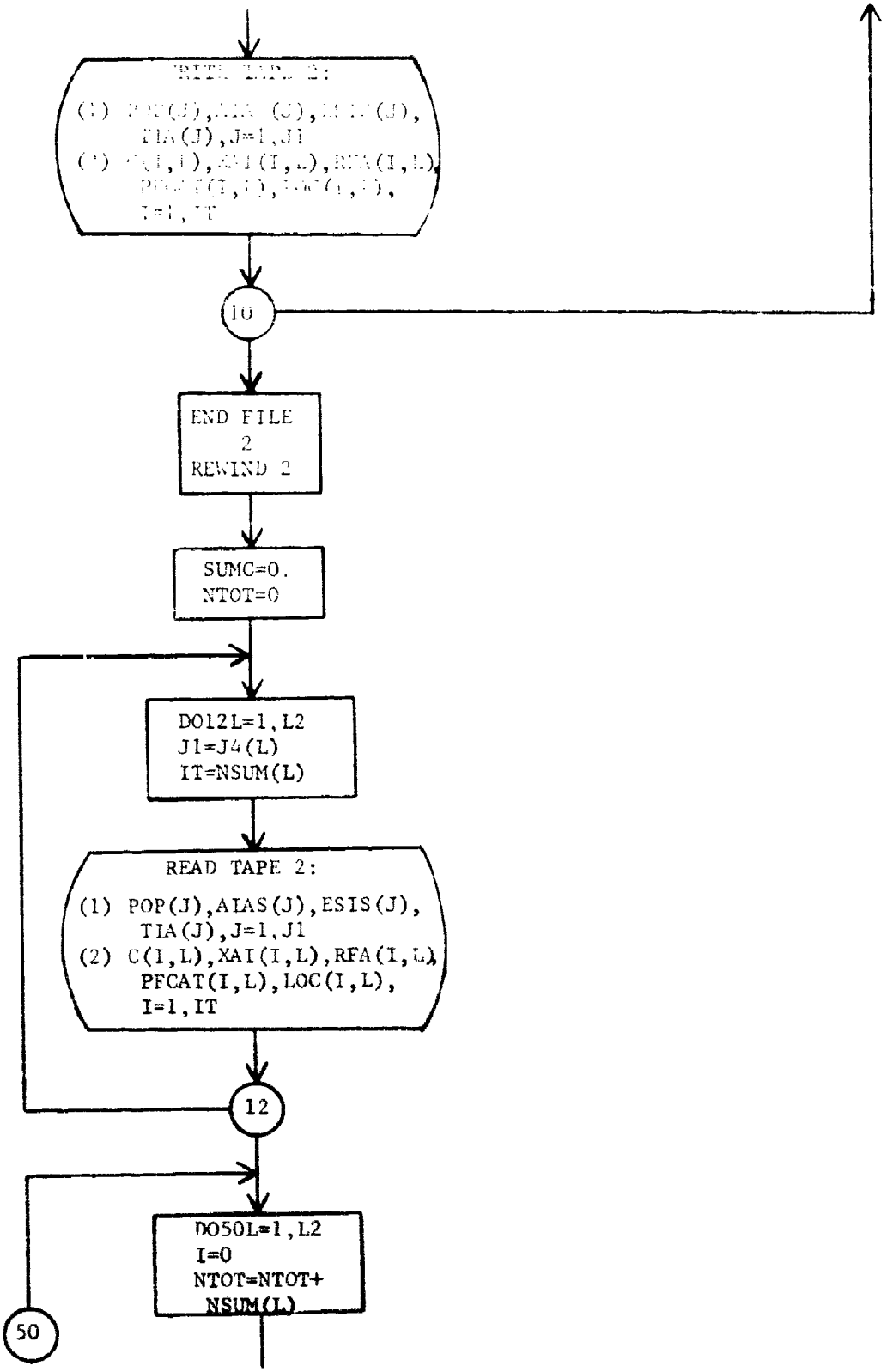
WRITE TAPE 2:
(1) POP(J),ALAS(J),ESIS(J),
TIA(J),J=1,J1
(2) C(I,L),XAI(I,L),RFA(I,L),
PFCAT(I,L),LOC(I,L),
I=1,IT
10
END FILE
2
REWIND 2
SUMC=0.
NTOT=0
DO12L=1,L2
J1=J4(L)
IT=NSUM(L)
READ TAPE 2:
(1) POP(J),ALAS(J),ESIS(J),
TIA(J),J=1,J1
(2) C(I,L),XAI(I,L),RFA(I,L),
PFCAT(I,L),LOC(I,L),
I=1,IT
12
DO50L=1,L2
I=0
NTOT=NTOT+
NSUM(L)
50

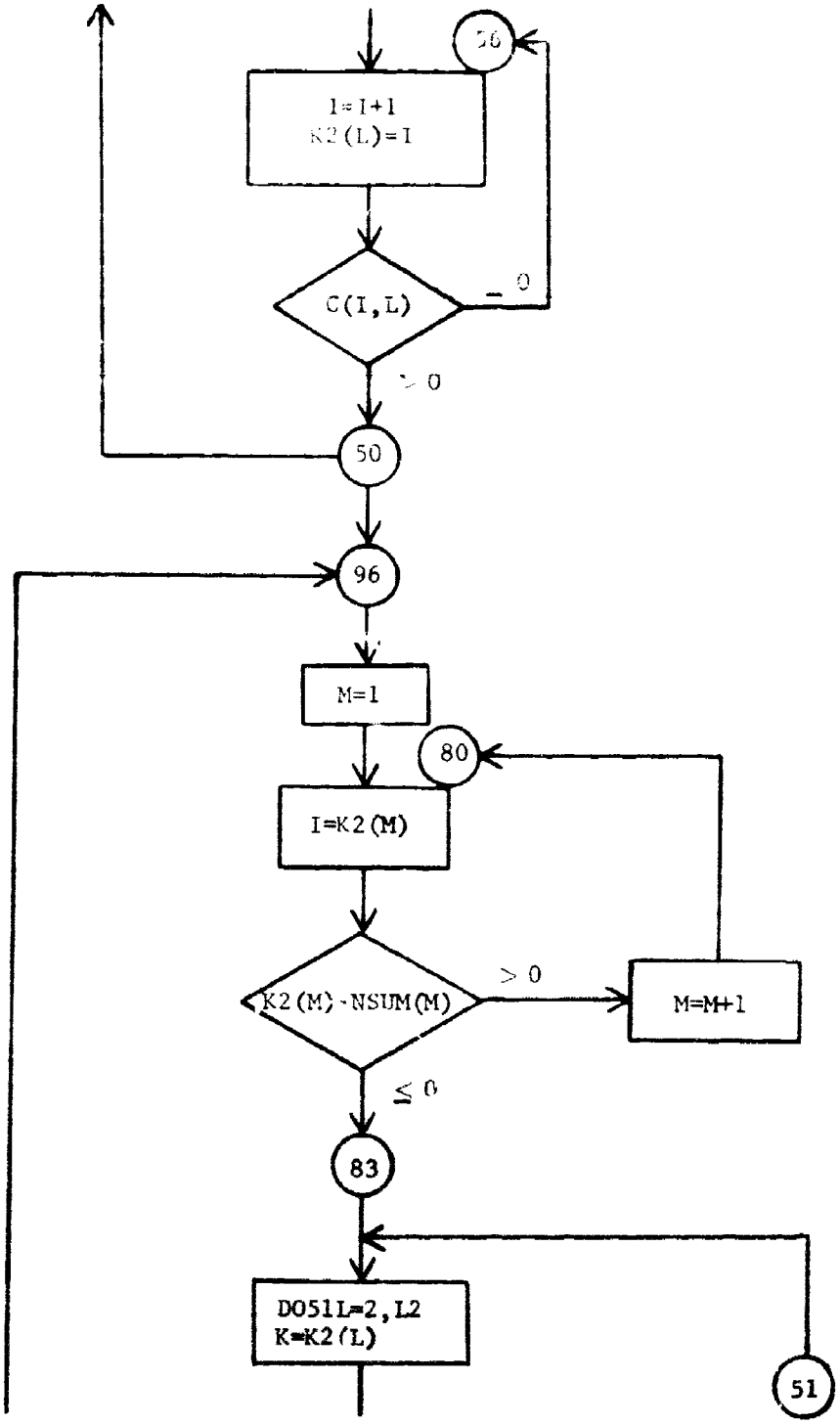
26
I=I+1
K2(L)=I
C(I,L)
= 0
> 0
50
96
M=1
80
I=K2(M)
K2(M)-NSUM(M)
> 0
M=M+1
≤ 0
83
DO51L=2,L2
K=K2(L)
51

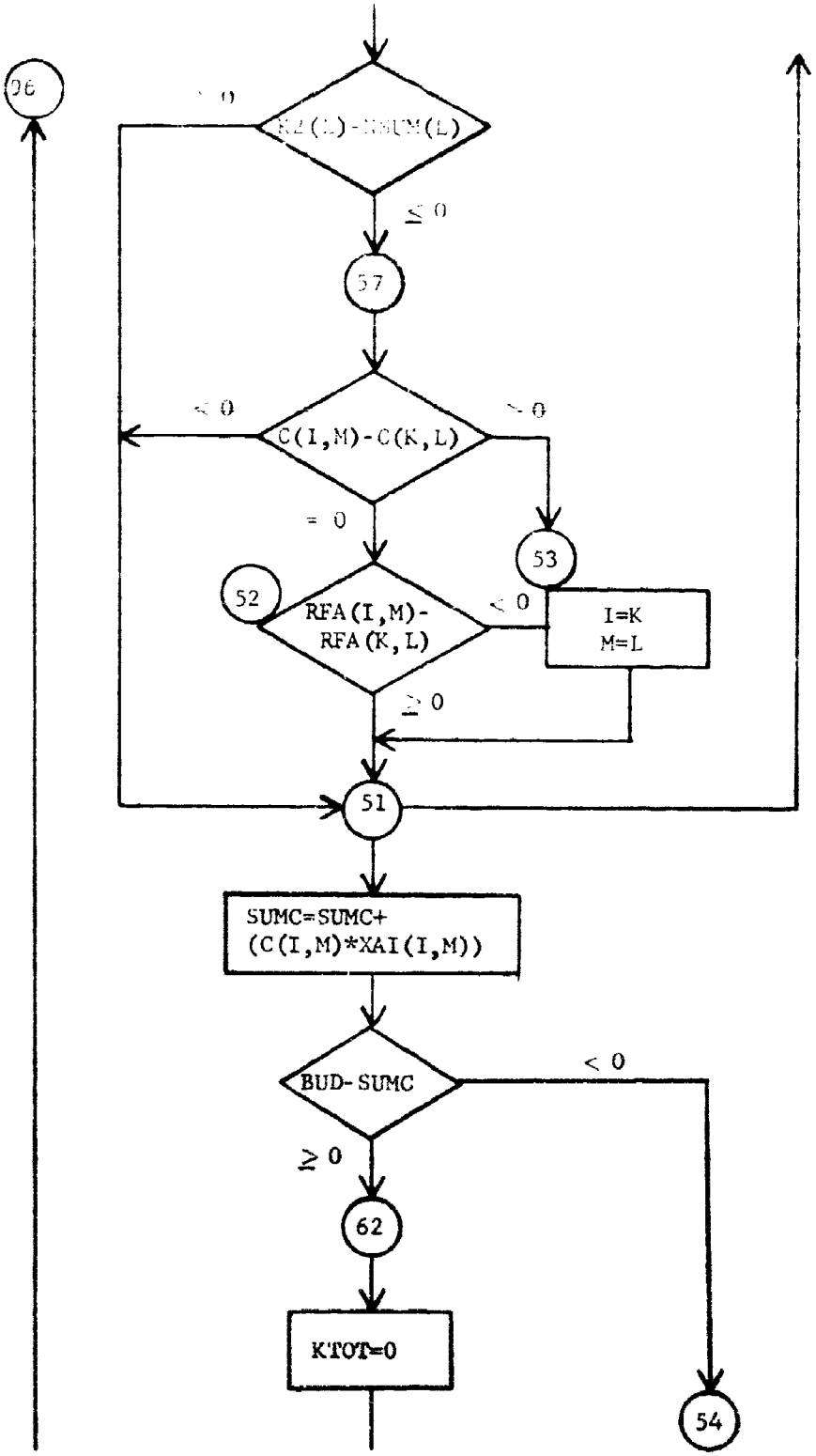
56
> 0
RZ(L)-XSUM(L)
≤ 0
57
< 0
C(I,M)-C(K,L)
> 0
= 0
53
52
RFA(I,M)-
RFA(K,L)
< 0
I=K
M=L
≥ 0
51
SUMC=SUMC+
(C(I,M)*XAI(I,M))
BUD-SUMC
< 0
≥ 0
62
KTOT=0
54

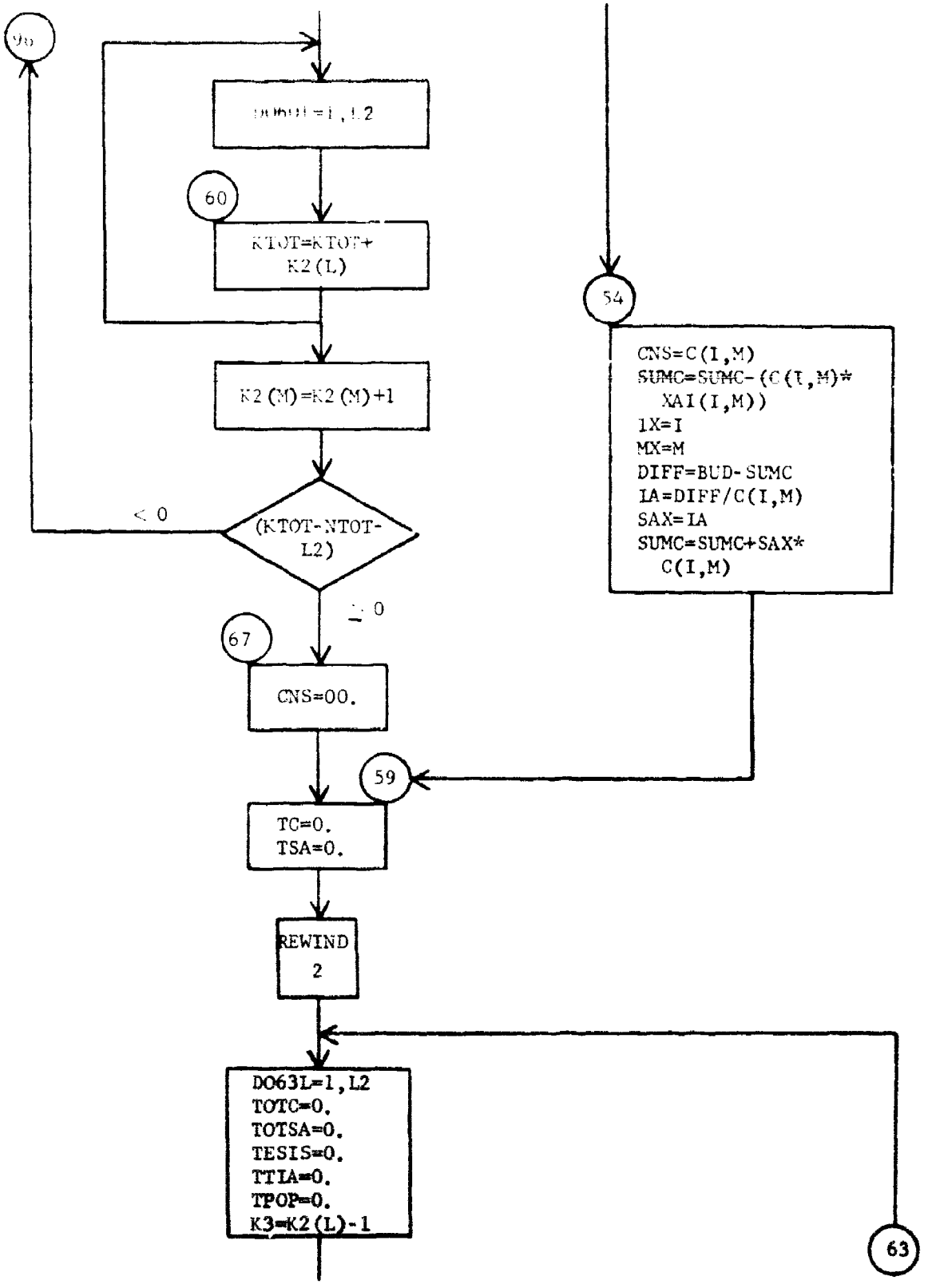
90
DO 60 L=1, L2
60
KTOT=KTOT+
K2(L)
K2(M)=K2(M)+1
< 0
(KTOT-NTOT-
L2)
≥ 0
67
CNS=00.
59
TC=0.
TSA=0.
REWIND
2
DO63L=1,L2
TOTC=0.
TOTSA=0.
TESIS=0.
TTIA=0.
TPOP=0.
K3=K2(L)-1
54
CNS=C(I,M)
SUMC=SUMC-(C(I,M)*
XAI(I,M))
IX=I
MX=M
DIFF=BUD-SUMC
IA=DIFF/C(I,M)
SAX=IA
SUMC=SUMC+SAX*
C(I,M)
63

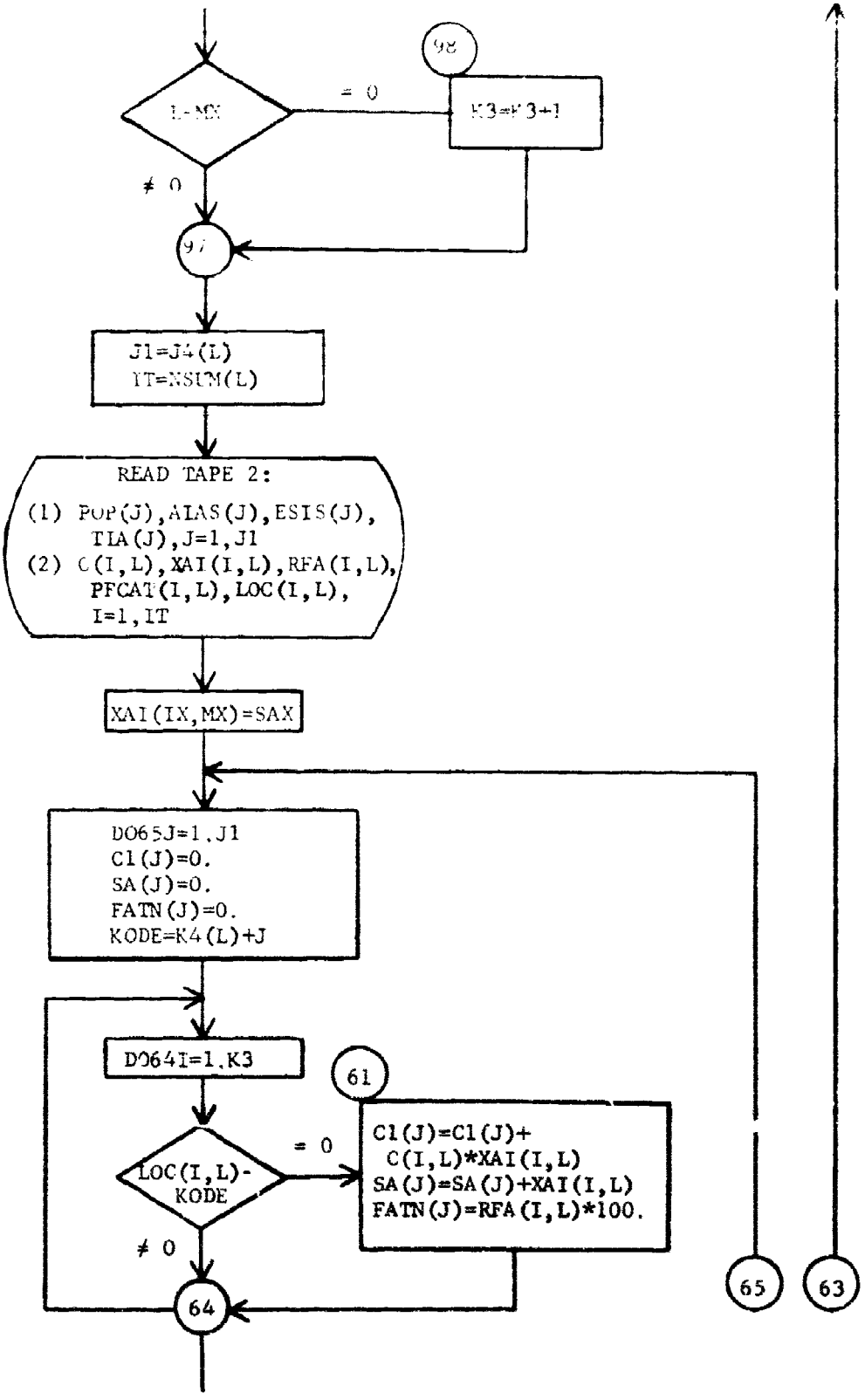
L-MX
= 0
98
K3=K3+1
≠ 0
97
J1=J4(L)
IT=NSUM(L)
READ TAPE 2:
(1) POP(J),AIAS(J),ESIS(J),
TIA(J),J=1,J1
(2) C(I,L),XAI(I,L),RFA(I,L),
PFCAT(I,L),LOC(I,L),
I=1,IT
XAI(IX,MX)=SAX
DO65J=1,J1
C1(J)=0.
SA(J)=0.
FATN(J)=0.
KODE=K4(L)+J
DO64I=1,K3
61
LOC(I,L)-
KODE
= 0
C1(J)=C1(J)+
C(I,L)*XAI(I,L)
SA(J)=SA(J)+XAI(I,L)
FATN(J)=RFA(I,L)*100.
≠ 0
64
65
63

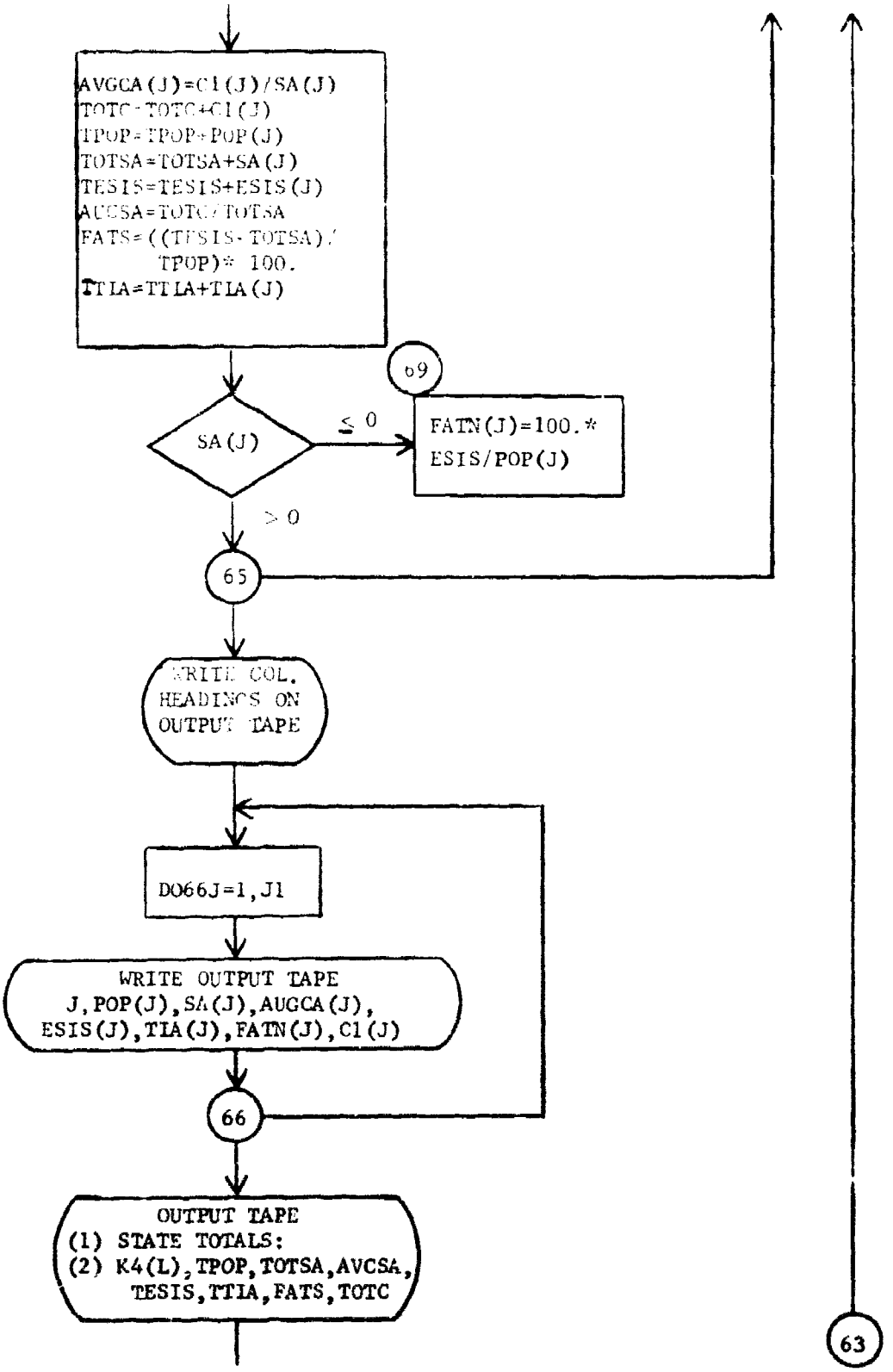
AVGCA(J)=C1(J)/SA(J)
TOTC=TOTC+C1(J)
TPOP=TPOP+POP(J)
TOTSA=TOTSA+SA(J)
TESIS=TESIS+ESIS(J)
AVCSA=TOTC/TOTSA
FATS=((TESIS-TOTSA)/
TPOP)* 100.
TTIA=TTIA+TIA(J)
69
SA(J)
≤ 0
FATN(J)=100.*
ESIS/POP(J)
> 0
65
WRITE COL.
HEADINGS ON
OUTPUT TAPE
DO66J=1,J1
WRITE OUTPUT TAPE
J,POP(J),SA(J),AUGCA(J),
ESIS(J),TIA(J),FATN(J),C1(J)
66
OUTPUT TAPE
(1) STATE TOTALS:
(2) K4(L),TPOP,TOTSA,AVCSA,
TESIS,TTIA,FATS,TOTC
63

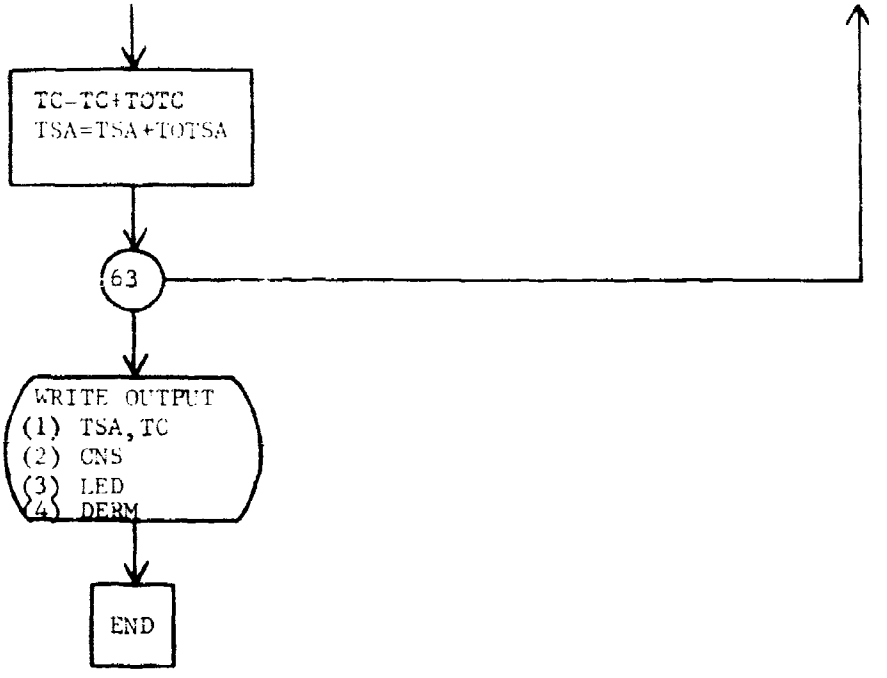
TC=TC+TOTC
TSA=TSA+TOTSA
63
WRITE OUTPUT
(1) TSA, TC
(2) CNS
(3) LED
(4) DERM
END

```
6.  PROGRAM SUNOGD
    DIMENSION POP(118),DER(118),PFCA(118),ESIS(118),TIA(118),K4(15),
   1AIAS(118),SA(118),I2(118),C1(118),FATN(118),AVGCA(118),PFM(14),
   2PFC(14),PDER(14),CA(14,118),AI(14,118),FAT(10,118),ES(10,118),
   3XAI(500,8),C(500,8),LOC(500,8),RFA(500,8),K2(15),J4(15),NSUM(15),
   4DCAT(500,8),PFCX(10,118),XPFC(14),DER95(118),DER50(118)
    Y=S = 1.
    TFCV = 0.
    BUD = 10000000.
    TERM = 100.
    L2 = 8
    READ 101, (PFR(I), I = 1,14)
    READ 101, (PFC(I), I = 1,14)
    DO 600 LED = 50,95,45
    REWIND 2
    REWIND 10
    WRITE OUTPUT TAPE 4,130, BUD , L2
    DO 10 L=1,L2
    READ INPUT TAPE 10,102, KODE, J1
    J4(L)=J1
    K4(L)=KODE
    N = 1
    NID = 15
  3 READ INPUT TAPE 10,107, (DER50(J), J= N,NID)
    IF (NID-J1) 1,2,2
  1 N = N + 15
    NID = NID + 15
    IF (NID-J1) 3,3,4
  4 NID = J1
    GO TO 3
  2 CONTINUE
    N = 1
    NID = 15
 73 READ INPUT TAPE 10,107, (DER95(J), J= N,NID)
    IF (NID-J1)71,72,72
 71 N = N + 15
    NID = NID + 15
    IF (NID-J1)73,73,74
 74 NID = J1
    GO TO 73
 72 CONTINUE
    DO 20 J=1,J1
    READ INPUT TAPE 10,103, POP(J), PFCA(J)
    READ INPUT TAPE 10,104, (ES(I,J), I = 1,10)
    READ INPUT TAPE 10,105, (AI(I,J), I = 1,10)
    READ INPUT TAPE 10,106, (CA(I,J), I = 1,10)
    READ INPUT TAPE 10,110,  AI(12,J),CA(12,J),AI(13,J),CA(13,J)
    CA(11,J) = 25.
    AI(11,J) = .10 * POP(J)
 20 CONTINUE
    IF (LED-50)47,48,47
 48 CONTINUE
    DO 49 J = 1,J1
    DER(J) = DER50(J)
 49 CONTINUE
    GO TO 75
```

```
 47 CONTINUE
    DO 76 J = 1,J1
    DER(J) = DER95(J)
 76 CONTINUE
 75 CONTINUE
    DO 204 J = 1,J1
    IF (DER(J))205,205,206
205 DER(J) = 0.
206 CONTINUE
    DO 204 I = 1,10
    IF (ES(I,J))207,207,208
207 ES(I,J) = 0.
208 IF (AI(I,J))209,209,210
209 AI(I,J) = 0.
210 IF (CA(I,J))211,211,204
211 CA(I,J) = 0.
204 CONTINUE
    IF (TFCV-1.0)402,400,402
400 READ 450, L6
450 FORMAT (I4)
    DO 401 M = 1, L6
    READ 451, IRA, IRB, JCA, JCB, OP1, OP2, XID
451 FORMAT (4I4, 2F6.2, F3.0)
    DO 411 J = JCA, JCB
    DO 411 I = IRA, IRB
    IF (XID-2.0)412,413,414
412 ES(I,J) = ES(I,J) * OP1 *OP2
    GO TO 411
413 AI(I,J) = AI(I,J) * OP1 * OP2
    GO TO 411
414 CA(I,J) = CA(I,J) * OP1 * OP2
411 CONTINUE
401 CONTINUE
402 CONTINUE
    NSUM(L)=0
    DO 21 J=1,J1
    SUMES=0.
    PFC(11)=PFCA(J)
    DO 31 I=1,10
    SUMES=SUMES+ES(I,J)
    IF(PFCA(J)-PFC(I))31,35,31
 35 PFR(11) = PFR(I)
 31 CONTINUE
    IF (POP(J) - SUMES)45,38,38
 38 ES(10,J)=ES(10,J)+POP(J)-SUMES
 45 ESIS(J)= POP(J)
    N=0
    AIAS(J)=0.
    DO 32 I=1,11
    PDER(I)=DER(J)/PFR(I)
    IF (PDER(I)-DERM)36,32,32
 36 IF (AI(I,J))37,37,40
 40 AIAS(J) = AIAS(J) + AI(I,J)
    N=N+1
    SA(N) = AI(I,J)
    C1(N)= CA(I,J)
```

```
      XPFC(N) = PFC(I)
   37 IF(I-10)39,39,32
   39 ESIS(J) = ESIS(J) - FS(I,J)
      IF (ESIS(J))68,32,32
   68 ESIS(J) = 0.
   32 CONTINUE
      IF (PDER(J) - DERM)302,301,301
  302 IF (TYS-1.0)301,300,301
  300 CONTINUE
      DO 311 I = 12,13
      MDER = PFR(I) * DERM
      IF(MDER-DER(J)) 312,312,311
  312 IF(AI(I,J))311,311,313
  313 AIAS(J) = AIAS(J) + AI(I,J)
      N = N+ 1
      SA(N) = AI(I,J)
      C1(N) = CA(I,J)
      XPFC(N) = PFC(I)
  311 CONTINUE
  301 CONTINUE
      FATN(J) = ESIS(J)/POP(J)
      TIA(J) = 0.
      IF (ESIS(J)) 9,9,8
    9 N=0
    8 IF (N)5,5,19
    5 NSUM(L) = NSUM(L) + 1
      GO TO 23
   19 I=0
      IF(ESIS(J)-AIAS(J))41,41,42
   41 RSIS = ESIS(J)
      TIA(J) = ESIS(J)
      GO TO 33
   42 RSIS = AIAS(J)
      TIA(J) = AIAS(J)
   33 CONTINUE
      K=1
      IF (N-1)95,95,6
    6 CONTINUE
      DO 34 M=2,N
      IF (C1(K) - C1(M))34,34,18
   18 K=M
   34 CONTINUE
   95 CONTINUE
      I = I + 1
      IF(SA(K) - RSIS)43,43,44
   44 SA(K) =RSIS
   43 CA(I,J)=C1(K)
      AI(I,J) = SA(K)
      PFCX(I,J) = XPFC(K)
      C1(K) = C1(K)+1000.
      FAT(I,J) = FATN(J)
      FATN(J) = FATN(J) -  (SA(K)/POP(J))
      RSIS = RSIS - SA(K)
      IF (RSIS)16,27,16
   27 N=I
   16 CONTINUE
```

```
      IF (I - N)33,23,23
   23 CONTINUE
      I2(J)=N
      NSUM(L) = NSUM(L)+I2(J)
   21 CONTINUE
      IT=NSUM(L)
      I = 0
      DO 7 J = 1,J1
      N2 = I2(J)
      IF (N2)30,30,7
   30 I = I + 1
      C(I,L) = 0.
      XAI(I,L) = 0.
      LOC(I,L) = KODE + J
      RFA(I,L) = ESIS(J)/POP(J)
    7 CONTINUE
      K = 1
      M=1
   14 I = I+ 1
      DO 28 J=1,J1
      N2=I2(J)
      IF (N2)28,28,29
   29 CONTINUE
      DO 22 N= 1,N2
      IF (CA(K,M)-CA(N,J))22,26,25
   26 IF (FAT(K,M)-FAT(N,J))25,22,22
   25 K=N
      M=J
   22 CONTINUE
   28 CONTINUE
      C(I,L)=CA(K,M)
      XAI(I,L)=AI(K,M)
      CA(K,M)=1000.+CA(K,M)
      PFCAT(I,L) = PFCX(K,M)
      LOC(I,L)= KODE + M
      RFA(I,L) = FAT(K,M) - (AI(K,M)/POP(M))
      IF (I-IT)14,24,24
   24 CONTINUE
      WRITE TAPE 2,(POP(J),AIAS(J),ESIS(J),TIA(J),J=1,J1)
      WRITE TAPE 2,(C(I,L),XAI(I,L),RFA(I,L),PFCAT(I,L),LOC(I,L),I=1,IT)
   10 CONTINUE
      END FILE 2
      REWIND 2
      SUMC = 0.
      NTOT = 0
      DO 12 L=1,L2
      J1=J4(L)
      IT = NSUM(L)
      READ TAPE 2, (POP(J),AIAS(J),ESIS(J),TIA(J),J=1,J1)
      READ TAPE 2, (C(I,L),XAI(I,L),RFA(I,L),PFCAT(I,L),LOC(I,L),I=1,IT)
   12 CONTINUE
      DO 50 L=1,L2
      I = 0
      NTOT = NTOT + NSUM(L)
   56 I= I + 1
      K2(L) = I
```

```
      IF (C(I,L))56,56,50
   50 CONTINUE
   96 CONTINUE
      M=1
   80 I = K2(M)
      IF (K2(M) - NSUM(M)) 83,83,81
   81 M = M + 1
      GO TO 80
   83 CONTINUE
      DO 51 L=2,L2
      K=K2(L)
      IF(K2(L) - NSUM(L))57,57,51
   57 CONTINUE
      IF (C(I,M)-C(K,L))51,52,53
   52 IF(RFA(I,M) - RFA(K,L)) 53,51,51
   53 I=K
      M=L
   51 CONTINUE
      SUM C = SUMC + (C(I,M) * XAI(I,M))
      IF (BUD - SUMC)54,62,62
   62 CONTINUE
      KTOT = 0
      DO 60 L = 1,L2
   60 KTOT = KTOT + K2(L)
      K2(M) = K2(M) + 1
      IF (KTOT - NTOT -L2)96,67,67
   67 CNS = 00.
      GO TO 59
   54 CNS = C(I,M)
      SUMC = SUMC - (C(I,M) * XAI(I,M))
      IX = I
      MX = M
      DIFF = BUD-SUMC
      IA = DIFF/C(I,M)
      SAX= IA
      SUMC = SUMC +SAX*C(I,M)
   59 TC = 0.
      TSA = 0.
      REWIND 2
      DO 65 L=1,L2
      TOTC = 0.
      TOTSA = 0.
      TESIS = 0.
      TTIA = 0.
      TPOP = 0.
      K3 = K2(L) - 1
      IF (L-MX) 97,98,97
   98 K3 = K3 + 1
   97 CONTINUE
      J1=J4(L)
      IT = NSUM(L)
      READ TAPE 2, (POP(J),AIAS(J),ESIS(J),TIA(J),J=1,J1)
      READ TAPE 2, (C(I,L),XAI(I,L),RFA(I,L),RFCAT(I,L),LUC(I,L),I=1,IT)
      XAI(IX,MX) = SAX
      DO 65 J=1,J1
      C1(J) = 0.
```

```
      SA(J)=0.
      FATN(J)=0.
      KODE = K4(L)*J
      DO 64 I=1,K3
      IF (LOC(I,L)-KODE)64,61,64
   61 C1(J) = C1(J) + C(I,L)*XAI(I,L)
      SA(J)=SA(J)+XAI(I,L)
      FATN(J)= RFA(I,L) * 100.
   64 CONTINUE
      AVGCA(J) = C1(J)/SA(J)
      TOTC=TOTC+C1(J)
      TPOP=TPOP + POP(J)
      TOTSA=TOTSA+SA(J)
      TESIS=TESIS + ESIS(J)
      AVCSA=TOTC/TOTSA
      FATS = (((TESIS - TOTSA)/TPOP) * 100.
      TTIA=TTIA+TIA(J)
      IF (SA(J)) 69,69,65
   69 FATN(J)=(ESIS(J)/POP(J))*100.
   65 CONTINUE
      WRITE OUTPUT TAPE 4,131
      WRITE OUTPUT TAPE 4,132
      WRITE OUTPUT TAPE 4,134
      DO 66 J=1,J1
      WRITE OUTPUT TAPE 4,119, J, POP(J),SA(J),AVGCA(J),ESIS(J),TIA(J),
     1FATN(J),C1(J)
   66 CONTINUE
      WRITE OUTPUT TAPE 4,133
      WRITE OUTPUT TAPE 4,120, K4(L),TPOP,TOTSA,AVCSA,TESIS,TTIA,FATS,
     1TOTC
      TC=TC + TOTC
      TSA = TSA +TOTSA
   63 CONTINUE
      WRITE OUTPUT TAPE 4,121,TSA,TC
      WRITE OUTPUT TAPE 4,123, CNS
      WRITE OUTPUT TAPE 4,140, LED
      WRITE OUTPUT TAPE 4,141, DERM
  101 FORMAT (14F4.0)
  102 FORMAT (I6,I3)
  103 FORMAT ( F8.0, F4.0)
  104 FORMAT (10F6.0)
  105 FORMAT (10 F6.0)
  106 FORMAT (10F6.2)
  107 FORMAT (5X, 15 F5.0)
  119 FORMAT (I6,2F10.1, F10.2,2F10.1,F10.3, F14.2,/)
  120 FORMAT (I6,2F10.1, F10.2,2F10.1,F10.3, F14.2,////)
  121 FORMAT (25H TOTAL SURVIVORS ADDED = F10.0,15H TOTAL COST = $F10.0)
  123 FORMAT (31H COST OF NEXT SURVIVOR ADDED = F6.2)
  130 FORMAT (30H                DISTRIBUTION OF $,F10.0,3H IN,I4,7H STATES
     1,///)
  131 FORMAT (82H   AREA POPULATION  TOTAL   AVG.COST/ INADEQUATE  TOTAL
     1    PERCENT   DISTRIBUTION )
  132 FORMAT (82H   CODE             SPACES   SPACE    SHELTERED POTENTI
     1AL REMAINING      OF       )
  110 FORMAT (2(F6.0,F6.2))
  134 FORMAT (82H                    ADDED    ADDED    POPULATION  SPACE
```

```
     1$  UNSHELTERED   FUNDS      ,/)
133 FORMAT (12H STATE TOTALS//)
140 FORMAT (13H CONTROL 1 = I4)
141 FORMAT (13H CONTROL 2 = F4.0//////)
400 CONTINUE
    END
```

DISTRIBUTION LIST
Research Triangle Institute
Contract #OCD-PS-64-56
Subtask 1113E

Report entitled: "Sensitivity Analysis of Civil Defense Systems and Components"

No. of Copies	Address
50	Office of Civil Defense Office of the Secretary of the Army Washington, D. C. 20310 Attn: Ass't. Director of Civil Defense (Research)
3	Office of the Adjutant General Department of the Army Washington, D. C. 20310 Attn: AGAL-CD
1	Chief of Naval Research (Code 104) Department of the Navy Washington, D. C. 20360
1	Assistant Secretary of the Army (R&D) Washington, D. C. 20310 Attn: Assistant for Research
1	Chief, Bureau of Naval Weapons (Code RRRE-5) Department of the Navy Washington, D. C. 20360
1	Chief, Bureau of Medicine & Surgery Department of the Navy Washington, D. C. 20390
1	Chief, Bureau of Supplies & Accounts (Code L12) Department of the Navy Washington, D. C. 20360
1	Chief, Bureau of Yards & Docks Office of Research (Code 74) Department of the Navy Washington, D. C. 20390
1	U. S. Naval Civil Engineering Laboratory Attn: Library Port Hueneme, California 93041
1	Advisory Committee on Civil Defense National Academy of Sciences 2101 Constitution Avenue, N. W. Washington, D. C. 20418 Attn: Mr. Richard Park

UNCLASSIFIED

Security Classification

DOCUMENT CONTROL DATA - R&D

(Security classification of title, body of abstract and indexing annotation must be entered when the overall report is classified)

1 ORIGINATING ACTIVITY (Corporate author)

Research Triangle Institute
Post Office Box 490
Durham, North Carolina

2a REPORT SECURITY CLASSIFICATION

UNCLASSIFIED

2b GROUP

3 REPORT TITLE

A COST/EFFECTIVENESS COMPUTER PROCEDURE FOR OPTIMUM ALLOCATION OF FALLOUT SHELTER SYSTEM FUNDS UNDER UNIFORM OR VARIABLE RISK ASSUMPTIONS

4 DESCRIPTIVE NOTES (Type of report and inclusive dates)

Volume I of a Final Report in 3 volumes plus Summary

5 AUTHOR(S) (Last name, first name, initial)

Guess, Floyd M.

6 REPORT DATE	7a TOTAL NO OF PAGES	7b NO OF REFS
October 1, 1965	90	6

8a CONTRACT OR GRANT NO OCD-PS-64-56	9a ORIGINATOR'S REPORT NUMBER(S)
b PROJECT NO Subtask 4113E	R-CU-157
c Systems Evaluation Division	9b OTHER REPORT NO(S) (Any other numbers that may be assigned this report)
d OCD Research Directorate	

10 AVAILABILITY LIMITATION NOTICES

Qualified requestors may obtain copies of this report from DDC.

11 SUPPLEMENTARY NOTES	12 SPONSORING MILITARY ACTIVITY
	Office of Civil Defense (OCD) Department of the Army Washington, D. C. 20310

13 ABSTRACT The dynamics of civil defense planning and systems evaluation require a procedure that yields approximate answers to questions concerning effective fallout shelter improvement programs. To accomplish this, a computerized model for the CDC 3600 is developed and demonstrated for OCD Region 6. The model permits an evaluation of shelter improvement programs against any fallout environment, but it is particularly valuable when RISK-type expressions of the probable fallout environment are used as inputs. Using detailed data from the National Fallout Shelter Survey and equally detailed estimates of the probable fallout hazard in a small area (counties, in the demonstration), the extent to which an area's population is inadequately protected is determined. Fallout shelter system funds are then allocated to areas of need in an optimal manner. The allocation employs shelter cost data obtained from Phase 2 of the National Fallout Shelter Survey on ventilation and shielding improvements. Estimated costs for package ventilation (PKV) and shelter in new construction are also employed in the demonstration in OCD Region 6. In all, 14 cost studies were run, using selected combinations of the budget level, the fallout risk level, etc. The demonstration shows the practicability of carrying out such large-scale cost/effectiveness analyses. It demonstrates a great need for reliable input data--particularly for the unit costs and available numbers and improvement options. The model and associated computer program not only provide tools of great value to the decision maker, but they also emphasize the criticality of his assessment of factors within and outside the model (e.g., planning horizon, impact of future changes in the expected attack environment, legacy value of existing shelter programs, etc.). Future work includes extending the model to include direct effects and performing more extensive demonstrations of the model. (U)

DD FORM 1 JAN 64 1473

UNCLASSIFIED

Security Classification

KEY WORDS	LINK A		LINK B		LINK C	
	ROLE	WT	ROLE	WT	ROLE	WT
Civil Defense Systems	9	4				
Sensitivity Analysis	8	1				
Shelter Allocation	8	4				
Radioactive Fallout	5	3	5	3		
Cost/Effectiveness			10	4		
Models			10	3		
Programming (Computers)			10	2	10	2
Protection Factor					1	1
Radiological Dosage					2	1

INSTRUCTIONS

1. ORIGINATING ACTIVITY: Enter the name and address of the contractor, subcontractor, grantee, Department of Defense activity or other organization *(corporate author)* issuing the report.

2a. REPORT SECURITY CLASSIFICATION: Enter the overall security classification of the report. Indicate whether "Restricted Data" is included. Marking is to be in accordance with appropriate security regulations.

2b. GROUP: Automatic downgrading is specified in DoD Directive 5200.10 and Armed Forces Industrial Manual. Enter the group number. Also, when applicable, show that optional markings have been used for Group 3 and Group 4 as authorized.

3. REPORT TITLE: Enter the complete report title in all capital letters. Titles in all cases should be unclassified. If a meaningful title cannot be selected without classification, show title classification in all capitals in parenthesis immediately following the title.

4. DESCRIPTIVE NOTES: If appropriate, enter the type of report, e.g., interim, progress, summary, annual, or final. Give the inclusive dates when a specific reporting period is covered.

5. AUTHOR(S): Enter the name(s) of author(s) as shown on or in the report. Enter last name, first name, middle initial. If military, show rank and branch of service. The name of the principal author is an absolute minimum requirement.

6. REPORT DATE: Enter the date of the report as day, month, year; or month, year. If more than one date appears on the report, use date of publication.

7a. TOTAL NUMBER OF PAGES: The total page count should follow normal pagination procedures, i.e., enter the number of pages containing information.

7b. NUMBER OF REFERENCES: Enter the total number of references cited in the report.

8a. CONTRACT OR GRANT NUMBER: If appropriate, enter the applicable number of the contract or grant under which the report was written.

8b, 8c, & 8d. PROJECT NUMBER: Enter the appropriate military department identification, such as project number, subproject number, system numbers, task number, etc.

9a. ORIGINATOR'S REPORT NUMBER(S): Enter the official report number by which the document will be identified and controlled by the originating activity. This number must be unique to this report.

9b. OTHER REPORT NUMBER(S): If the report has been assigned any other report numbers *(either by the originator or by the sponsor)*, also enter this number(s).

10. AVAILABILITY/LIMITATION NOTICES: Enter any limitations on further dissemination of the report, other than those imposed by security classification, using standard statements such as:

(1) "Qualified requesters may obtain copies of this report from DDC."

(2) "Foreign announcement and dissemination of this report by DDC is not authorized."

(3) "U. S. Government agencies may obtain copies of this report directly from DDC. Other qualified DDC users shall request through _____."

(4) "U. S. military agencies may obtain copies of this report directly from DDC. Other qualified users shall request through _____."

(5) "All distribution of this report is controlled. Qualified DDC users shall request through _____."

If the report has been furnished to the Office of Technical Services, Department of Commerce, for sale to the public, indicate this fact and enter the price, if known.

11. SUPPLEMENTARY NOTES: Use for additional explanatory notes.

12. SPONSORING MILITARY ACTIVITY: Enter the name of the departmental project office or laboratory sponsoring *(paying for)* the research and development. Include address.

13. ABSTRACT: Enter an abstract giving a brief and factual summary of the document indicative of the report, even though it may also appear elsewhere in the body of the technical report. If additional space is required, a continuation sheet shall be attached.

It is highly desirable that the abstract of classified reports be unclassified. Each paragraph of the abstract shall end with an indication of the military security classification of the information in the paragraph, represented as *(TS)*, *(S)*, *(C)*, or *(U)*.

There is no limitation on the length of the abstract. However, the suggested length is from 150 to 225 words.

14. KEY WORDS: Key words are technically meaningful terms or short phrases that characterize a report and may be used as index entries for cataloging the report. Key words must be selected so that no security classification is required. Identifiers, such as equipment model designation, trade name, military project code name, geographic location, may be used as key words but will be followed by an indication of technical context. The assignment of links, rules, and weights is optional.